UCRL 8727

UNIVERSITY OF CALIFORNIA

Ernest O. Lawrence

Radiation Laboratory

HIGH-TEMPERATURE STUDIES OF THE C_3 MOLECULE

TWO-WEEK LOAN COPY

This is a Library Circulating Copy which may be borrowed for two weeks. For a personal retention copy, call Tech. Info. Division, Ext. 5545

DISCLAIMER

This document was prepared as an account of work sponsored by the United States Government. While this document is believed to contain correct information, neither the United States Government nor any agency thereof, nor the Regents of the University of California, nor any of their employees, makes any warranty, express or implied, or assumes any legal responsibility for the accuracy, completeness, or usefulness of any information, apparatus, product, or process disclosed, or represents that its use would not infringe privately owned rights. Reference herein to any specific commercial product, process, or service by its trade name, trademark, manufacturer, or otherwise, does not necessarily constitute or imply its endorsement, recommendation, or favoring by the United States Government or any agency thereof, or the Regents of the University of California. The views and opinions of authors expressed herein do not necessarily state or reflect those of the United States Government or any agency thereof or the Regents of the University of California.

UCRL-8727
Chemistry-General

UNIVERSITY OF CALIFORNIA

Lawrence Radiation Laboratory
Berkeley, California

Contract No. W-7405-eng-48

HIGH-TEMPERATURE STUDIES OF THE C_3 MOLECULE

John Leland Engelke

(Thesis)

April 30, 1959

Printed for the U. S. Atomic Energy Commission

Printed in USA. Price $2.25. Available from the
Office of Technical Services
U. S. Department of Commerce
Washington 25, D. C.

HIGH-TEMPERATURE STUDIES OF THE C_3 MOLECULE

Contents

	Page
Abstract	4
Introduction	5
Energy Level Diagram	10
Apparatus	13
Furnace Description	13
Instrumentation	17
Optical Arrangement	20
Absorption Spectrum	24
Integrated Absorption Coefficient	29
Heat of Formation	32
Experimental Procedure	32
Temperature Coefficient of Absorption	32
Temperature Coefficient of Emission	35
Treatment of Results	41
Sigma Plot for Absorption Experiment	47
Sigma Plot for Emission Experiment	53
Summary of Results	55
Discussion of Results	57
Conclusion	64
Acknowledgments	68

HIGH-TEMPERATURE STUDIES OF THE C_3 MOLECULE

Contents

(Continued)

	Page
Appendix	69
A. The Effect of the Evaporation Coefficient on Equilibrium	69
B. Table of Thermodynamic Properties of the C_3 Molecule	73
C. Values of ΔH_0° Obtained from the Literature	75
D. A Suggested Vibrational Scheme	77
References	83

HIGH-TEMPERATURE STUDIES OF THE C_3 MOLECULE

John Leland Engelke

Lawrence Radiation Laboratory and Department of Chemistry
University of California, Berkeley, California

April 30, 1959

ABSTRACT

The C_3 molecule has been produced in thermal equilibrium with graphite. The so-called C_3 continuum has been studied from 3700 A to 4850 A and its unresolved structure has been shown to be part of the C_3 Swings bands. Evidence is presented that the transition is $^1\Pi_u \longleftrightarrow {}^1\Sigma_g^+$ and that the latter is the ground electronic state of C_3. The integrated absorption coefficient of C_3, in the above spectral region, leads to an oscillator strength, f, of 0.2.

The temperature coefficients of absorption and emission intensities were measured near 4045 A. The absorption experiment set a lower limit to the heat of formation of C_3, $\Delta H_o^o = 181$ kcal/mole. The value from the emission experiment is 197 $\pm$ 10 kcal/mole. By comparison with other results in the literature, the best value for the heat of formation is taken to be $\Delta H_o^o = 189 \pm 5$ kcal/mole.

HIGH-TEMPERATURE STUDIES OF THE C_3 MOLECULE

INTRODUCTION

The C_3 molecule has received considerable interest in recent years. The definitive spectroscopic investigation by Douglas has shown that it is a linear, triatomic radical analogous to CO_2.[1] The bond distance is intermediate between that of doubly and triply bonded carbon atoms. And the mass-spectrometric studies of Chupka and Inghram[2] have shown that in equilibrium with graphite at temperatures above 2400°K, C_3 is a more important species than either C_2 or C.

The spectrum of C_3 was first observed in the emission of comets,[3] where, for many years, it was known simply as the "λ4050" or "Swings bands." There it appears as a number of line-like bands extending from 3987 A to 4075 A. The first laboratory source used for the production of C_3 was an interrupted discharge in methane.[4] Under high resolution, the discharge spectrum appears discrete.*

The C_3 emission from a graphite-resistance-tube furnace was first observed by Garton.[7] Phillips and Brewer have also produced C_3 in a graphite-resistance-tube furnace (King type).[8] In addition to the discrete bands, they observed a strong underlying continuum with a maximum intensity

---

*For a discussion of the earlier work on C_3, the reader is referred to the articles by Herzberg[5] and by Rosen and Swings.[6]

at 4000 A and a secondary maximum at 4300 A. Using the mass action law and varying the carbon partial pressure by means of a tantalum sleeve through which the carbon had to diffuse, they were able to show that the continuous emission was also produced by C_3.

An identical continuum has been observed, by Marr and Nicholls, to accompany the Swings bands in the spectra from a fuel-rich oxy-acetylene flame.[9] This is not too surprising, since the conditions in the flame are quite similar to those in the furnace. The King furnace is an equilibrium source. The flame has been shown to approximate equilibrium conditions and the temperature at which the bands and continuum appear is about the same for both sources.[10]

The question to be asked at this point is whether the observed emission is a true dissociate continuum, or whether it is simply an unresolved discrete spectrum. A more complete understanding of the physical and chemical properties of the C_3 molecule will be obtained by answering this question.

If the spectrum is, indeed, a true continuum, it must be produced by recombination, followed by radiation, such as the reaction of C_2 and C which has been suggested by Marr,[11] or by some other mechanism involving a repulsive electronic state of C_3.* If this is the case, then the super-

---

*Such mechanisms as electron recombination are not considered here, since the energy involved would be much greater. Also, Phillips and Brewer have shown that the continuum intensity does not depend on the electron partial pressure. For a discussion of mechanisms which lead to continua, see Herzberg,[12] pp. 387-437.

position of the continuous and discrete spectra is an unfortunate coincidence, insofar as an investigation of the ground state is concerned.

If, on the other hand, the spectrum is discrete and is also part of the same electronic band system which gives rise to the Swings band, then the transition may be used to investigate this stable molecule in its ground state.

Phillips and Brewer noted that the continuum intensity was comparable to the total integrated intensity of all the C_2 Swan bands.[8] This strongly suggests that they did not observe a true continuum. They have also shown, however, that even with a resolving power approaching the Doppler width of a single line, the spectrum may not be resolvable. Such a spectrum has been called a "pseudo-continuum."[13] Phillips has also studied the temperature coefficient of emission for a portion of the continuum and finds that the excitation of the emitting state is not great enough to be dissociative.[14]

In both the work of Phillips and of Phillips and Brewer, the amount of scattered radiation from the hot furnace wall was sufficient, so that even after correcting for it, some uncertainty remained, and the possibility that the spectrum was a true continuum was not completely eliminated.

The purpose of the present research was to obtain an unequivocal answer as to the nature of the observed continuum. Experimentally, two completely different techniques were used.

First, the absorption spectrum was measured over most of the electronic transition. By integrating the absorption coefficient over the frequency interval for which the absorption was measured, an order of magnitude estimate could be made of the total number of absorbers in the lower state of the continuum. From the known temperature and dimensions of the furnace

and from available thermodynamic data, an independent estimate could be made of the number of molecules with various amounts of excitation which would exist, in thermal equilibrium, in the furnace. The results of a comparison between the measured and the calculated values has clearly indicated that in the process of absorbing a quantum of 4000 A radiation, the C_3 molecule in the lower state of the so-called continuum could not dissociate.

The second technique used to investigate the nature of the continuum was to measure directly the heat of formation of the electronic states involved in the transition. This was done both in absorption and in emission. That is, first the heat of formation of the lower state of the pseudo-continuum was determined by measuring the temperature coefficient of absorption. Next, the temperature coefficient of the emission intensity was measured. The results of the absorption and the emission experiments clearly show not only that the transition is discrete, but that the electronic states are the same as those of the Swings bands. Furthermore, from the theoretical predictions of Pitzer and Clementi,[15] and from the agreement between the heat of formation measured here and the mass-spectrometer determination by Chupka and Inghram,[2] the transition is characterized as $^1\Pi_u \longleftrightarrow {}^1\Sigma_g{}^+$, with the latter state as the ground electronic state of C_3.

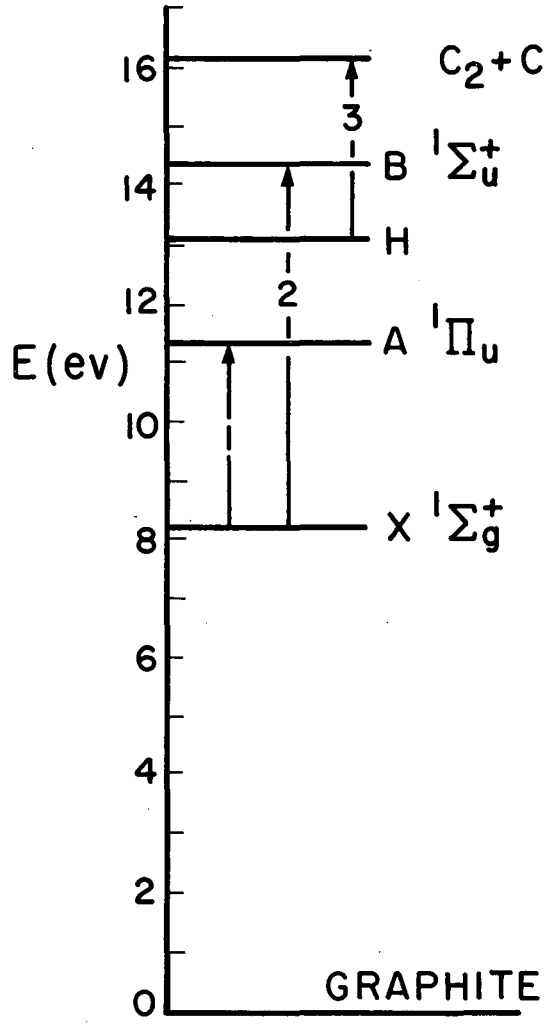

MU-17243

Fig. 1. Energy level diagram for electronic states of C_3.

ENERGY LEVEL DIAGRAM

The energy level diagram shown in Fig. 1 has been included to illustrate the various electronic states of C_3 and their relationship to the observed spectrum. It has been constructed from available experimental data and from theoretical predictions. Instead of the conventional assignment of zero energy to the ground state of the gaseous C_3 molecule, all energies are taken relative to graphite in its standard state. The plotted energies then correspond to the standard heats of formation for the various electronic states of C_3.

The ground state has been placed at 8.20 ± 0.22 ev. The rotational assignments of the 4050 A band by Douglas and of the 4072 A band by Kiess and Broida are based on the transition (1 in Fig. 1) being between a Π and a Σ state. From the rotational analysis alone, they could not tell which state would be lower in energy.

Pitzer and Clementi have completed a rough molecular orbital (MO) calculation for C_3.[15] They have estimated the excitation for a number of states, three of which are included in Fig. 1. The ground state configuration beyond closed 1S shells is predicted to be $\sigma_g(2)$, $\sigma_u(2)$, $\sigma_g'(2)$, $\Pi_u(4)$, $\sigma_u'(2)$: $^1\Sigma_g^+$. The other two states are the only bound states that are likely to have completely allowed transitions with the ground state. The configuration . . . $\Pi_u(4)$, $\sigma_u'(1)$, $\Pi_g(1)$: $^1\Pi_u$ has a predicted excitation of 3 ev, agreeing almost too well with the observed transition, 4050 A corresponding to 3.06 ev. The configuration . . . $\Pi_u(3)$, $\sigma_u'(2)$, $\Pi_g(1)$: $^1\Sigma_u^+$ has a predicted excitation of 5.6 ev which, however, could be in error by more than an electron volt.

A rough attempt to observe the $^1\Sigma_u^+ \longleftarrow {}^1\Sigma_g^+$ transition (2 in Fig. 1) in the King furnace was made. A small quartz Hilger spectrograph was used with EK I-O UV plates. The light source was a bright xenon arc. Exposures taken with the furnace above 3000°K showed strong absorption for wave lengths shorter than about 2300 A. The furnace had previously been baked out for over an hour at temperatures from 3000°K to 3100°K; however, the possibility that the furnace contained some hydrocarbons cannot be ruled out. With the furnace off, an equivalent exposure showed darkening of the plate to about 1900 A as evidenced by the absorption of the Schumann-Runge (3,0) and (4,0) bands of oxygen at 1946 A and 1923 A respectively. The observed furnace absorption could very well be due to C_3. It could also be due to hydrocarbons or other carbon species, or some combination of these. The nature of the absorbing species, however, must await further work, such as observing the spectra under higher resolution or by measuring the absorption intensity while the carbon partial-pressure is varied.

The energy level at 16.1 ev corresponds to the sum of the heats of formation of C_2 and C (monotomic gas) in their lowest states, $^3\Pi_u$ and ^3P respectively. The rounded value of 200 kcal adopted by Stull and Sinke was used for the heat of formation of C_2. The heat of sublimation of carbon is now well established as 170 kcal.[16] The sum of these two heats corresponds to a minimum value for the energy of a C_3 repulsive or dissociative state. The atomization of C_3 to ground state carbon atoms (^3P) would be higher in energy by the dissociation energy of C_2. Any degree of excitation in the dissociation products would correspond to

a more highly excited state than is shown and need not be considered here.

The upper level of a true continuum must then be at least 16 ev. If a predissociation were to explain the continuum, the predissociating level would have to be above 16 ev. Since the dissociating fragments part with various amounts of kinetic energy, the 16 ev must be considered as only a lower limit for the occurrence of a dissociative continuum.

A hypothetical state (H) has been placed at 13 ev, the minimum energy that the lower state of a true continuum could have. The transition (3 in Fig. 1) would correspond to the continuum produced by a molecule in state H absorbing a quantum of 4050 A radiation. The nature of state H is unimportant. What is important is that for an equilibrium system at a temperature, T, the concentration of C_3 in state H is related to the concentration in the ground state, X, by the Boltzmann factor corresponding to the difference in energy of the two states. In the chapter, "Absorption Spectrum," the concentration of the absorbing state - as estimated from the integrated absorption coefficient - is compared with the predicted concentrations of states X and H.

APPARATUS

Furnace Description

The King furnace used in this investigation has been described most recently by Hicks[17] and except for various modifications which have been added through the years - is the furnace constructed and described by Brewer, Gilles, and Jenkins.[18] The furnace consists of a graphite heater tube supported by split graphite bushings between massive copper electrodes in a vacuum-tight, water-cooled brass chamber.

Thermal insulation for the heater tube is supplied by five cylindrical radiation shields surrounding a graphite spool. The inner surface of the spool is protected from blistering and eroding by a 1-1/8 in i.d. cylindrical insert or sleeve, which may be replaced readily whenever it begins to show signs of wear.

The heater tubes were machined from 12-1/2 by 7/8 in. diameter rods of AGW* graphite. The tubes used in this research had thicker walls than those which have generally been used with this furnace. A 3/8 in. bore was drilled uniformly through the length of the tube. A six inch heating zone in the center of the tube was maintained at a uniform temperature by tapering the outside diameter symmetrically from 3/4 in. at the center to 21/32 in. at the constrictions or points of minimum cross section, which are located 3-1/4 in. from either end. The diameter of

---

*This graphite was obtained from The National Carbon Company, 30 East 42nd Street, New York 17, N. Y.

the tube increased to 7/8 in. in two equal steps - at the constriction and at points 2-1/2 in. from either end. The shape of the heater tube was such that thermal conduction through the ends of the tube was compensated for by a greater power dissipation at the constriction.

For further definition of the uniform hot zone, cylindrical graphite baffles - 1/2 in. long and with 1/8 in. holes drilled along their axes - are placed inside the tube at the constrictions. The baffles also serve to minimize diffusion of the gaseous species from the hot zone.

The temperature profile along a well-designed tube increased very rapidly in going through the baffle to the hot zone. The ΔT across the baffle amounted to about 500°C. The temperature maximum was generally found between 1/2 and 1 in. from the inner face of the baffle with a temperature about 200° hotter than the baffle face. The 3 to 4 in. region at the center of the furnace was about 20° to 40° cooler than the maximum. The higher temperature near the baffle tended to compensate for losses of carbon vapor by diffusion through the baffle.

The thicker-walled heater tube permitted temperatures up to 3100°K to be maintained for several hours. Power requirements at these temperatures were about 40 kva. The potential drop across the furnace was only about 16 volts, which was supplied by a 100-kva step-down transformer. This transformer was operated from a 440 volt, single phase source fused at 100 amps. Temperature control was obtained by manually adjusting a Powerstaff connected to a control transformer, whose secondary was in series with the step-down transformer. Now that power transistors are

available which will carry 15 amps or more, it would be a relatively simple matter to construct an automatic control loop.

A modification in the design of the furnace's window assemblies has increased the flexibility with which the furnace may be operated. Instead of the windows being stuck on with sealing wax, they are clamped between two O rings, thus permitting the furnace to be operated at higher than atmospheric pressure. The windows used in this research were 1/6 in. thick optical quartz. They could easily be replaced and cleaned. Two brass disks with 1/4 in. apertures could be positioned in the bore of the window assembly. The presence of these diaphragms greatly helped in keeping the windows clean. I believe that convective transport of graphite "dust" was greatly hindered by the two diaphragms which formed a "sink" where the gas could stagnate and thus permit the dust to settle. Multiple reflections of the light beam were avoided by inclining the windows 2° from the vertical.

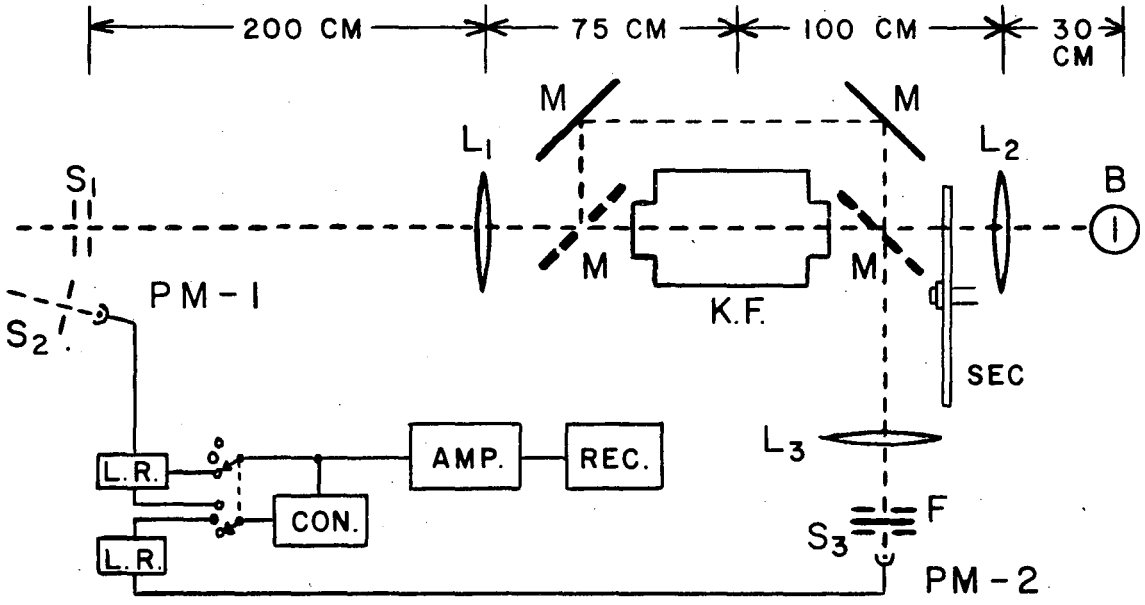

MU-17247

Fig. 2. Schematic diagram of apparatus. See text for meaning of symbols.

Instrumentation

The electronic detection equipment was constructed by Phillips and has been described by him.[19] Briefly, a 1P21 photomultiplier located on the Rowland circle of a 3-meter, concave grating spectrograph generates a dc current which is proportional to the intensity of the light hitting its photocathode. This current goes to ground through one of several precision, wire-wound, "load" resistors (See L.R. Fig. 2). The voltage drop across the resistor is amplified after being changed to ac by a Brown "Converter" or vibrator (CON.). The output from the amplifier* (AMP.), is converted back to dc and used to drive a Brown "Electronic" strip-chart recorder, (REC.).

Several minor modifications of the electronics were made. In order that absorption measurements could be made in the King furnace, it was necessary to measure the intensity of a light source shining through the furnace without measuring the emission from the furnace itself. To do this, a rotating sector was placed between the light source and the furnace. (See SEC, Fig. 2). The ratio of open area to closed area on the sector was 47%, the same as the ratio of "on" to "off" time of the Brown converter. Also, by driving the sector with a synchronous motor, the modulation frequency was 60 cps, the same as the frequency of the converter. Thus if the converter was by-passed only the modulated light was amplified. So long as the light emitted by the furnace was not

---

*This is a power amplifier; the output voltage is actually less than the input.

sufficient to saturate the photomultiplier, it did not affect the recorded intensity. The proper phase relation between the modulated light and the amplifier -- more specifically, between the modulated light and the converter at the output end of the amplifier -- was obtained by rotating the sector motor until a maximum response was obtained from the recorder.

A .1 μf capacitor (not shown in Fig. 2) was connected in parallel with the load resistance, and served to eliminate or filter any 60 cycle pickup in the signal from PM-1. Obviously, when PM-1 was to be used for absorption measurements, this filter had to be out of the circuit. As a result, the noise level was somewhat more of a problem with ac operation than it was with dc. The sensitivity of the apparatus was almost as high for the ac sector method as it was for dc, especially when the load resistance was moderate. As the load resistance increases, however, the capacitive reactance of the coaxial cable from PM-1 became comparable to the load and served as an ac short.

A channel for a second 1P21 photomultiplier (PM-2 in Fig. 2) was added to the apparatus. A separate set of load resistors was included since, in general, signals from the two photomultipliers would not be of the same order of magnitude. Whereas PM-1 operated from a well-regulated high voltage power supply, PM-2 had a box of ten 90-v B-batteries. The two supplies were equally satisfactory.

This apparatus differs from a microammeter in one important respect. A well-regulated signal, controlled by a Helipot, is used to compensate for the photomultiplier dark current. Dark current compensation was checked before and after each series of intensity measurements. Dark current fluctuations were about 0.5 IU (intensity unit). One IU is defined

as 1% of full-scale deflection of the Brown recorder. The process of adjusting the Helipot to zero IU, while the light beam was blocked off, is referred to as "zeroing" the instrument.

A method of measuring small changes of intensity was investigated. It consisted of calibrating the deflection produced by a certain change in the Helipot setting. The zero could then be shifted off scale by a known amount, up to 250 IU. Full-scale deflection, for example, could then correspond to a change of intensity from 250 to 350 IU. For the purpose of measuring absorption intensity, however, the gain in sensitivity was not so great as had been anticipated. Experimentally, the noise level of the 1P21 and the associated electronics increased almost linearly with the signal. Also, this method of operation made it difficult to check dark current compensation. Thus, the method did not prove to be acceptable, and the absorption measurements were made without shifting the zero off scale. If more accurate absorption measurements are required, a double-beam instrument will probably have to be developed.

Optical Arrangement

The optical arrangement that was used for absorption experiments is shown in Fig. 2. A light source was required that would be fairly intense and whose intensity would remain constant during an experiment. Tungsten filament lamps are the most easily controlled light sources; various types were tested. Since the lamp filament was to be focused on the slit of the 3-meter spectrograph, a vertical, straight-ribbon filament lamp was selected.* The lamp (B in Fig. 2) was clamped rigidly in place in an air-cooled housing. The medium pre-focus base insured good electrical contact. An intense source was obtained by operating the 6-volt lamp from a stabilized 10-v dc supply which Worden has described.[20]

The lens L_2 formed an image of the lamp filament in the center of the King furnace. Lens L_1 then focused the image onto the diaphragm directly in front of the spectrograph slit S_1. At the same time, L_1 also focused on the diaphragm the image of the baffle at the rear of the heater tube hot zone. Strictly speaking, if the baffle was in focus, the filament was not. However, the baffle was only 8 cm from the center of the furnace and both images were effectively in focus.

The importance of focusing the rear baffle on the spectrograph diaphragm is seen when one considers the intense black body emission from the furnace walls. From geometrical optics, it can be shown that since the aperture of the diaphragm is smaller than the image of the hole in the baffle, any light ray from the furnace wall will fall outside the aperture, and thus be blocked from entering the spectrograph. Light from the walls, however

---

* General Electric Co., Type 18A/T10/1P.

may still be scattered into the optical path by imperfections in the optics and by dust particles in the furnace, on the window, or on the lens. The amount of scattered light must be minimized, and the degree to which I have succeeded in doing so will be seen later in the discussion of the emission experiment. I have already discussed how the diaphragms in the window assembly cut down on the amount of dust in the furnace and on the window. They also, along with the baffle in the front of the hot zone, reduce the amount of wall light getting to the window and the lens, where it could be scattered. An additional baffle (for a total of three) placed in the front of the heater tube, as Hicks described,[17] further reduced the scattered light.

In order that the intensity of the light source (B) could be monitored during an absorption experiment, four aluminized mirrors (M) were placed around the furnace as shown in Fig. 2. The two nearest to the furnace windows were only partially coated so that half of the light was reflected around the furnace, while the other half was transmitted straight through to the spectrograph. The half-coated mirror to the rear of the furnace also served to reflect the furnace emission to the second 1P21 photomultiplier, PM-2. The lens (L_3) focused the baffle in the front of the heater tube onto a diaphragm placed directly in front of a narrow-band-pass filter (F). An adjustable slit (S_3) attenuated the light intensity hitting PM-2 to an acceptable amount.

The purpose of PM-2 was to monitor the temperature of the furnace. Since it was not practical to measure the furnace temperature with an optical pyrometer during an absorption experiment, the response of PM-2

as a function of temperature was determined before and after each experiment. To do this, the lens and mirror in front of the furnace were removed and the pyrometer sighted on the furnace wall through the front window. The gas emission at the wave length of the narrow-band-pass (NBP) filter was measured by PM-2 as the temperature of the furnace was first increased and then decreased. Thus, during the absorption -- with L_1 and the front mirror replaced -- the furnace temperature could be determined from the calibrated response of PM-2.

During this work, two different NBP filters were used. These were second order interference filters* made by vacuum depositing two silver films on either side of a thin transparent spacer. The filters have maximum transmittance at wave lengths 5175 A and 5640 A, with a width at half intensity of about 100 A. These filters also have windows at about 3600 A. The UV window was overlooked in the absorption experiments and although the 1P21 sensitivity is down, some of the signal from PM-2 may have been due to the C_3 emission at this wave length. For the emission experiments, however, the NBP filters were combined with Wratten filters, 58B and 22,** respectively. This removed the UV transmission completely.

The two wave lengths of the NBP filters were selected so that PM-2 would respond to either the C_2 Swan (0,0) band or (0,1) band, depending

---

*Bausch and Lomb Optical Company

**Eastman Kodak Company

on the filter used. The advantage obtained by using the gas emission from C_2 rather than the black-body emission from the wall for measuring the temperature may be seen by noting the sensitivity with which the temperature could be measured. Because of the large heat of formation of C_2, the intensity was observed to increase by about 1.4% per $^{\circ}K$ with the 5175 A NBP filter in the neighborhood of $3000^{\circ}K$, whereas the intensity from a black-body would increase only about half so rapidly.

ABSORPTION SPECTRUM

The absorption by the hot gases in the King furnace heater-tube was measured for wave lengths from 3700 A to 4850 A. The resulting absorption spectrum was primarily due to the pseudo-continuum although molecular features were also observed for C_2 and CN. The apparatus, which was described in the last chapter, had a rotating sector which chopped the light beam entering the furnace. Only the intensity of the modulated light was recorded. Thus the gas emission and scattered light (from dust on the window and lens) did not affect the measured absorption intensity.

The spectrum was obtained in two parts -- first, from 3700 A through 4358 A, and then, after replacing the furnace heater-tube, from 4358 A to 4850 A. In part, the wave length scale was determined by inserting a mercury germicidal lamp* behind the rotating sector as the spectrophotometer scanned through the 4358 A Hg line. In addition, the band heads for CN at 3883 A and C_2 at 4737 A determined the rate of scan.

The 3-meter concave grating spectrograph was used in the first order where it had a plate factor of 5.85 A/mm. From the slit widths of 0.3 mm and 0.1 mm used for the two spectral regions, one would calculate instrumental widths of 1.76 A and 0.58 A, respectively. However, the response time of the recorder was about 5 sec and, since the scanning rate was 84 A/min, the effective resolution was no better than 7 A. As a result, although

---

*General Electric Lamp, G4T4/1.

atomic impurities are known to be present, no atomic features were observed. The contribution of such features to the total absorption intensity, however, is believed to be negligible. Although the spectrometer rate of scan could have been reduced to so little as 0.7 A/min, the rapid scan was used in order that the furnace temperature would not change appreciably during the experiment.

The various intensities measured by the photomultiplier, PM-1, and displayed on the Brown recorder chart will now be defined as:

I_o : The intensity as measured by the response to the modulated signal from the tungsten filament lamp after passing through the cold furnace (i.e., before the furnace has been turned on).

I : The intensity of the same signal after it has been attenuated by the hot gas in the furnace.

I_R : The intensity of the reference signal which was reflected around the furnace.

I_A : The absorption intensity, a derived intensity equal to $I_o - I$.

In addition, intensities which will be used in connection with emission experiments are:

I_e : The intensity of the gas emission from the furnace.

I_B : The intensity of a black-body at the temperature of the furnace.

I_S : The intensity of light scattered from the hot furnace wall.

For both of the absorption scans, it was necessary to measure I_o as a function of wave length, and to be certain that it did not change during the absorption determination. To do this, I_o and I_R were recorded by

alternately placing a shutter in front of the light beam reflected around the furnace and then directly in front of the furnace window. Again, the 4358 A Hg line determined the wave length. After repeating this three times, the furnace was filled to 5 cm Hg pressure with argon, the power turned on, and the furnace brought to the desired temperature. When the temperature was about constant, the scan motor was turned on. The intensity, I, was recorded as the spectrometer scanned from 3700 A to 4358 A. The scan took about 8 minutes during which time the temperature increased by about 10°C. In the separate scan from 4358 A to 4850 A, the temperature increased about 50°C. At each end of the scans, I_R was measured while the furnace was on. The furnace was then cooled and the scans of I_o and I_R were repeated.

By tracing each of the scans onto a single sheet, they could be superimposed. The Hg 4358 A line and the dark current zero were used to position each scan. The I_o traces were constant to about 1%. The I_R trace before and during the absorption showed that I_o had not changed while the furnace was on. The scan of the attenuated signal, I, had about 5% rms noise. A smoothed trace of I was made and the value for I/I_o was determined at 50 A intervals. In the regions of C_2 and CN features, the ratio was determined for additional wave lengths. After converting the wave lengths to wave numbers, the results were plotted in Fig. 3.

Temperature measurements were made for this experiment by sighting a Leeds and Northrup optical pyrometer at the wall in the center of the heater-tube. The reflection from the half-coated mirror was used.

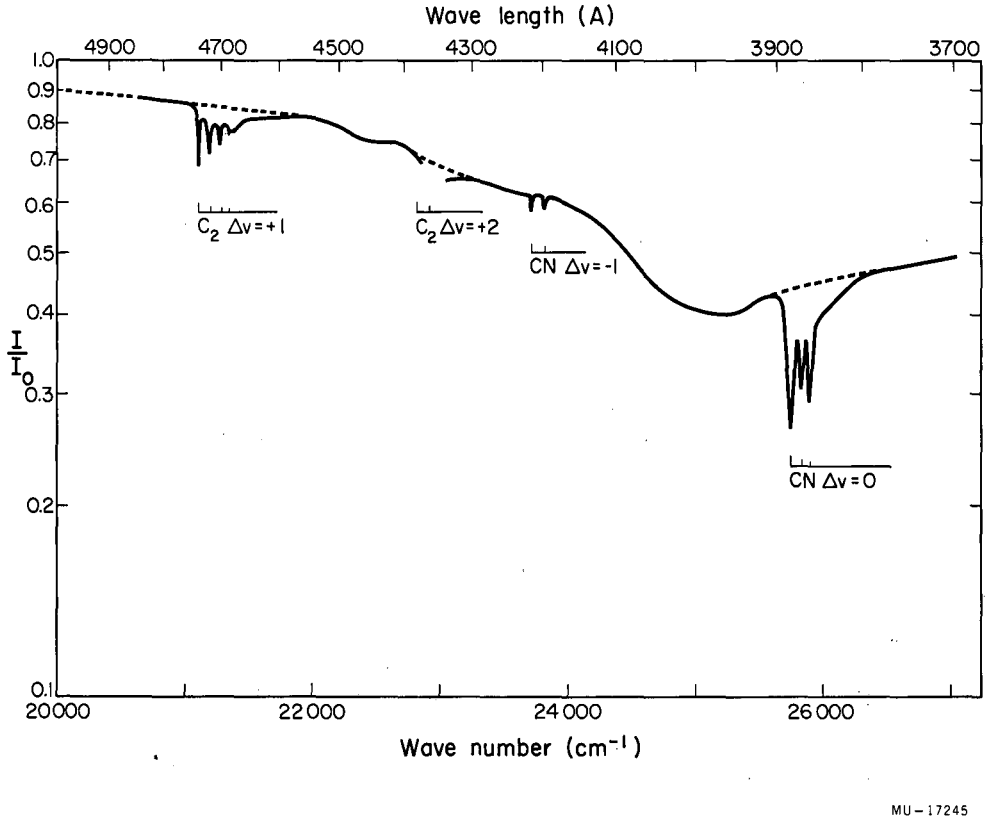

Fig. 3. Absorption spectrum for C_3.

The temperature correction for this arrangement was determined beforehand by placing a ribbon filament lamp near the furnace window and measuring the temperature of the lamp directly and by reflection. Because the mirror only reflects about 50% of the light, the temperature correction was about 700°C at the temperature of the experiment.

After correcting for the mirror and window losses and for the NBS calibration on the pyrometer, the average temperature was calculated to be 3105 ± 50°K. However, a comparison of the observed absorption intensity, I_A, at 4045 A with what would be expected on the basis of the emission intensities (described below), would indicate that this temperature is probably too low by 70°K. The discrepancy could be explained in part by the large temperature correction that was required. It might also be due to the cone of light, determined by the hole in the furnace baffle, not completely filling the pyrometer lens. In view of this uncertainty, the upper limit to the furnace temperature will be taken as 3200°K.

Integrated Absorption Coefficient

The integrated absorption coefficient is obtained by measuring the area of the absorption spectrum in Fig. 3. From a well-known equation relating the number of absorbers to the integrated absorption coefficient,* an estimate can be made of the C_3 concentration that was present in the furnace when the spectrum was determined. This equation takes the form:

$$Nf = \frac{mc^2}{\pi e^2} \int k(\nu)d\nu = \frac{mc^2}{\pi e^2 x} \int \ln \frac{I}{I_o} d\nu$$

where N is the concentration in molecules/cm^3 of the absorbing species, f is the oscillator strength, ν is the spectral frequency in cm^{-1}, and $I/I_o = e^{-kx}$, where k is the absorption coefficient and x is the path length for absorption. Substituting the values for m and e, the electron mass and charge, and c, the velocity of light -- converting to common logs and taking the 6-in. hot zone or x = 15.2 cm as the length of the absorbing path we obtain:

$$Nf = 1.72 \times 10^{11} \int \log \frac{I}{I_o} d\nu$$

The area, in Fig. 3, which was due to the C_3 absorption was measured with a planimeter. Those portions of the spectrum due to CN and C_2 were excluded as shown by the dotted lines. The UV limit to the measurement

---

*See, for example, Ref. 12, p. 382 or Ref. 21.

was arbitrarily taken as 27,000 cm^{-1}, corresponding to approximately 3700 A. Obviously, the absorption continues to shorter wave lengths. Marr has given the limits for the C_3 pseudo-continuum as 3500 A to 4600 A.[22] This would indicate that the area measured here may be about 30% too low. The red limit was obtained by a linear extrapolation beyond 21,000 cm^{-1} which added about 13% onto the experimentally observed absorption. The total integrated absorption to the red of 3700 A was then found to be 1634 cm^{-1}.

Putting the value of 1634 cm^{-1} into the equation obtained above gives $Nf = 2.8 \times 10^{14}$ absorbers/cm^3. The value of the oscillator strength f, is not expected to exceed unity for the total electronic transition in which a single electron per absorbing molecule is being promoted from one molecular orbital to another. On this basis, the lower limit for the concentration of C_3 that was present in the furnace may be taken as $N = 2.8 \times 10^{14}$ molecules/cm^3.

Using $\Delta H_0^0 = 189$ kcal for the heat of formation of C_3 and interpolating the free energy functions given in Appendix B for the formation of C_3 from graphite, I have estimated that the partial pressure of C_3 at 3200°K is 8.07×10^{-4} atmospheres. From the ideal gas law, this corresponds to $N_o = 1.85 \times 10^{15}$ molecules/cm^3. Assuming that $N = N_o$, one obtains a value of 0.2 for the oscillator strength.

The concentration of C_3 may be calculated from N_o and the Boltzman equation for any state with excitation, ϵ. In the chapter, "Energy Level Diagram," the minimum excitation of the hypothetical state

H, that would be required if the spectrum were a true continuum was shown to be 13.0 - 8.2 = 4.8 ev. From this, the equilibrium concentration would be calculated as $N_H = N_o e^{-\epsilon/kt} = 5.7 \times 10^7$ molecules/cm^3.

The estimate of N_o is probably not in error by more than a factor of 10, due to uncertainties in T or ΔH_o^o. For example, N_o would be 2.5 times as large if T were 100° higher, or 5 times as large if H_o^o were 10 kcal less. Clearly then, the integrated absorption coefficient has shown that the pseudo-continuum could not result from the dissociation of C_3. In fact, the results strongly suggest that the absorption is from the ground state of C_3. The temperature coefficient for either absorption or emission may therefore be used to determine the heat of formation of C_3.

HEAT OF FORMATION

Experimental Procedure

Temperature Coefficient of Absorption

The method for measuring absorption in the last chapter was used also for determining the temperature coefficient of absorption. Whereas the temperature remained constant while the wave length was varied in measuring the absorption spectrum, for the temperature coefficient the reverse was true. A more precise method for measuring the temperature was required, however, and the second photomultiplier, PM-2, was developed as a photopyrometer -- as described in the section on the optical arrangement.

The mercury germicidal lamp was again used to determine the wave length. The spectrograph was set on the peak of the Hg line at 4046.6A. The slits were opened to 0.55 mm, corresponding to 3.2 A. Thus, the absorption was determined for the region just to the violet of the C_3 Swings band whose head is at 4050 A.

The 5175 A narrow-band-pass filter was used to define the wave length range measured by the photopyrometer. The measured intensity is therefore, primarily due to the emission of the C_2 (0,0) Swan band. The photopyrometer was calibrated by measuring the emission with increasing and decreasing furnace temperatures immediately before and after the C_3 temperature coefficient was determined. The temperature range of the calibration coincided with the range used in the absorption experiment. The emission intensity as a function of temperature was

found to fit the linear equation $\log(IT) = 21.278 - 4.873 \times 10^4/T$ with a maximum uncertainty of 4% in the coefficient of 1/T. The temperature, in $^{\circ}K$, corresponds to the temperature measured with Leeds and Northrup optical pyrometer SN 749235, designated as pyrometer No. 2 in this laboratory.

The form of the calibration equation was suggested by noting that the logarithm of the C_2 partial pressure should vary linearly with 1/T. The slope of the calibration curve, however, would have to be about 10% larger to agree with the heat of formation of C_2. A small, but reproducible amount of scattered light -- which has a smaller temperature coefficient corresponding to that of a black-body -- would account for the observed calibration equation. Regardless of the source of radiation used with the photopyrometer, however, the important thing to note is that by measuring the intensity during the absorption experiment, the temperature could be calculated with a fair degree of accuracy.

As in the determination of the absorption spectrum, the intensities I_o and I_R were measured before the furnace was turned on and again after it had cooled. These intensities were measured with the spectrometer photomultiplier (PM-1) set at 4046.6 A. The previously degassed furnace was then filled to 10-cm Hg pressure with argon and heated to 2800°K at which temperature about 2% absorption was observed. The temperature of the furnace was gradually increased, by steps, to 3040°K where a maximum absorption of 22% was observed. At each point the furnace was equilibrated -- as determined by the constancy of the signal from the photopyrometer. And the intensities I and I_R of the modulated light

shining through and around the furnace respectively were recorded. Similarly, the absorption was determined for various temperatures as the furnace was cooled. The constancy of I_R insured that the intensity I_o had not changed while the furnace was on.

The results from this determination of the temperature coefficient of absorption will be discussed, along with the emission results, at the end of this chapter.

Temperature Coefficient of Emission

In this section will be described the experimental determination of the temperature coefficient for C_3 emission. A portion of the spectrum was selected which had strong continuous emission but which was free from any apparent band heads. In the last section it was shown for C_2 that the scattered light would cause an error in the determination of the heat of formation. For C_3 the scattered intensity is corrected for by assuming that it behaves as a black-body with a small but constant emissivity, i.e., as a "gray-body." That this can be done has been demonstrated with PM-2 at the wave lengths of the C_2 Swan (0,0) and (0,1) bands, from which the effective emissivity was calculated.

In planning the emission experiment, I had hoped that by simultaneously measuring the emitted intensity of C_3 with photomultiplier PM-1, and of C_2 with PM-2, that it would be possible to determine accurately a difference in their respective heats of formation. Hicks showed that various systematic errors were eliminated when he determined the difference in energy between the C_2 singlet and triplet systems.[17] For example, small changes in the temperature profile of the heater tube, errors in temperature measurement, and slight deviations from equilibrium would affect the intensities of both carbon species in the same way.

For the difference method to be effective, however, there should be no serious factor affecting one intensity and not the other. Unfortunately, the methods for measuring the intensity of C_2 involved factors for which adequate correction could not be made. These factors were the scattered light correction and self-absorption correction.

Although the C_2 measurements cannot be used as originally intended, they have still proven useful for determining the scattering correction for C_3 and for demonstrating that there are no serious errors in the experimental results.

The experimental arrangement differed in several respects from that used for the absorption measurements (see Fig. 2). In this one, the four mirrors, the rotating sector, and the tungsten ribbon filament lamp were removed. The optical pyrometer was rigidly fixed behind the furnace, replacing the lamp. In order that the optics of the pyrometer would be completely filled with light from the inside of the heater tube, a slot was cut in the rear baffle, giving it the appearance of a key hole.

The lens L_1, focused the image of the key-hole baffle onto a diaphragm in front of the spectrograph slit S_1, with a magnification factor of three. The 1/8-in. aperture in the diaphragm thus permitted only a small central portion of the gas emission to enter S_1 and blocked out the emission from the hot furnace wall.

One of the half-coated mirrors was placed between L_1 and S_1 at an angle of 45° to the optical path. The transmitted light was focused on the diaphragm as described above. The photomultiplier PM-2, which was used to monitor the temperature for the absorption experiment, was placed so that the reflected light could be detected. A diaphragm was placed in front of PM-2 in order that the reflected baffle image -- focused on it by L_1 -- would be apertured the same as it was at S_1.

Before the temperature coefficient could be measured, a method had to be developed that would correct for the scattered light. The

experiment that demonstrated how this correction could be made will now be described. The 5640 A NBP and Wratten 22 filters had been mounted in front of PM-2 with the idea that by measuring the C_2 Swan (0,1) transition, a much smaller self-absorption correction would be required. Fortunately, for the present purpose, the C_2 intensity was only important at the higher temperatures, while the intensity was almost entirely due to scattered light at the lower temperatures of the experiment. The intensity was measured with PM-2 for about 80 different temperatures scattered throughout the range of 2500°K to 3100°K. When log I was plotted versus 1/T, the slope of the curve at lower temperatures agreed with the slope calculated from Wien's equation for a black-body at the wave length of the NBP filter.* By extending the black-body slope to higher temperatures and assuming that the scattered light would continue to have a black-body characteristic, the C_2 contribution to the measured intensity could be determined. From this, a ΔH_f for C_2 was found that was quite reasonable, considering the magnitude of the scattering correction.

The actual magnitude of the scattered intensity compared with a black-body was determined by measuring the emission from a TaC plug placed in the center of the furnace. The scattered intensity was found to be 0.5% of the intensity of the plug that previously had been shown to emit as a black-body. The scattered light, therefore, behaves like a "gray-body" with a small but constant emissivity. The actual value for this effective emissivity depends on the optical arrangement and

---

*For the wave lengths and temperatures used in this research, Wien's equation agrees with Planck's radiation law to within 0.03%.

the amount of dust on the window and lens. If the light were to be scattered by particles of dust suspended or floating in the furnace, the emissivity would probably vary with temperature. This possibility is considered, however, in the discussion of results.

After this experiment, the 5175 A NBP and Wratten 58 B filters were replaced in front of PM-2 so that the greater relative contribution of the C_2 Swan (0,0) band would be measured.

For the determination of temperature coefficient of C_3, the spectrograph was set and focused to give 4000 A in the second order with a plate factor of 2.8 A/mm. Slit settings of 0.50 mm for the spectrograph and the photomultiplier PM-1 were used because this permitted the amplifier to be operated on a stable gain setting over the entire range of intensities encountered. The deviation from linearity was less than 1% for the amplifier.

Positioning PM-1 at the desired wave length was done by scanning through the 4047 A Hg line emitted by the germicidal lamp. It is interesting to note that the measured width at half intensity, 1.47 A, agrees quite well with what one would calculate from the known slit widths and plate factor. The scan was stopped when the slit of PM-1 was centered on $\lambda 4044.70 \pm .02$ A.

In order to correct the C_3 intensity for self-absorption, we must know the intensity of emission that a black-body would have if measured under the same conditions. Therefore, the first part of the emission

experiment was the measurement of the intensity from a TaC plug placed in the center of the furnace. The plug was 1/8 in. thick and stood 1/4 in. high. A small hole was drilled in one surface. The plug was carborized in the King furnace by slowly increasing the temperature to 3000°K. Even though the gold-colored plug does not have an emissivity of unity, it emits as a black-body when placed in the center of the heater tube, as verified by the blending of the hole and the surface. A deviation of 5°K from black-body would have been detected.

After measuring the black-body emission at a number of temperatures from 2215°K to 2680°K, the TaC plug was removed from the furnace without exposing the graphite to air. After degassing at the highest temperature of the experiment, the furnace was filled with argon to a pressure of 10 cm, which, when heated, increased to a constant 15-16 cm Hg pressure. The intensities measured by the two photomultipliers were alternately recorded as the temperature of the furnace was varied. The temperatures were measured by sighting pyrometer No. 2 through the keyhole baffle upon the central hot zone of the heater tube. About ten minutes after I adjusted the power input to the furnace, the temperature had generally stabilized, and the C_2 and C_3 had reached equilibrium as indicated by the recorder tracing. At each power level, the intensity was measured for another ten minutes, with the pyrometer readings being taken every minute. These readings were averaged to give the furnace temperature corresponding to the measured emission intensity. The recording channel was switched alternately between PM-1 and PM-2 about every two

minutes. The power input would then be changed and the procedure repeated at a different temperature. So that certain systematic errors would be minimized, the furnace temperatures were selected in a random fashion.

Treatment of Results

The heat of formation of C_3 is the heat of the reaction:

$$3C\ (\text{graphite}) = C_3(g).$$

A fundamental assumption for the present measurement of this heat is that relative concentrations of C_3 at different temperatures can be determined from the measured intensities in absorption and emission.

In absorption, the measured quantity, log I_o/I, is proportional to the concentration of the absorbing species (Beer's law). If the true absorption coefficient -- as measured with a spectrograph of infinite resolving power -- varies greatly over the frequency of the observed feature, then the apparent absorption coefficient must be corrected for the true profile of the feature.[23] Plates taken with a resolving power approaching the Doppler width, however, show less than 10% structure on top of the pseudo-continuum at the wave lengths of this research. Thus the average absorption, as measured, is expected to agree with the absorption determined by integrating over the true profile. This also applies to the quantity I_e/I_B, which will be used to correct the emission intensity for self-absorption. The concentration of C_3 in the furnace is therefore proportional to log I_o/I. The results from the determination of the temperature coefficient of absorption are given in Table I. The equation for $\sum$ from which the values in the table were calculated, is derived in the next section.

Table I

Results from the determination of the temperature coefficient of absorption

Sequence	T, °K	I_o/I	$\sum$	$1/T \times 10^4$
0	2807	1.020	16.135	3.562
1	2907	1.069	16.736	3.440
12	2913	1.077	16.787	3.433
11	2930	1.090	16.869	3.413
2	2962	1.126	17.032	3.376
10	2969	1.137	17.070	3.368
3	2972	1.132	17.059	3.365
4	3003	1.189	17.226	3.330
9	3008	1.192	17.237	3.324
5	3033	1.249	17.359	3.297
6	3035	1.268	17.389	3.295
7	3037	1.270	17.392	3.293
8	3040	1.285	17.416	3.289

The concentration of C_3 in the upper state of the transition is proportional to I_M, the intensity due to molecular C_3 if self-absorption were not present. Floyd and King have applied a self-absorption correction to CN[24] based on the work of Smit.[25] Their equation, in terms of the nomenclature used here, is $I_e/I_B = 1 - e^{-I_M/I_B}$, where I_e is the emitted intensity after correcting for scattered light and I_B is the intensity of a black-body at the same temperature. Rearranging and taking the logarithm gives $I_M = -I_B \ln(1-I_e/I_B)$. Expanding the logarithm and factoring I_e/I_B from the expansion, one obtains:

$$I_M = I_e \left(1 + \frac{1}{2}\frac{I_e}{I_B} + \frac{1}{3}\frac{I_e^2}{I_B^2} + \ldots\right) \cong I_e \left(1 + \frac{1}{2}\frac{I_e}{I_B}\right).$$

The error introduced by the approximation is less than 1%, if the self-absorption correction, S. A. $= I_e/2I_B$, is less than 10%. Thus, I_M could be calculated for each temperature of the emission experiment.

The logarithm of the black-body intensity was obtained from the equation $\log I_B = 9.774 - 1.544 \times 10^4/T$, which was derived by fitting the Wien's law slope ($1.4380 \times 10^8/2.303 \times 4044.70 = 1.544 \times 10^4$), to the experimental determination of I_B at 4044.70 A. The best visual estimate for the slope of a line through the experimental points (temperature range, 2215°K to 2680°K) was 0.65% less than the theoretical slope, i.e., 1.534×10^4. This indicates that an experimental determination of ΔH, at least in this temperature range, would only be in error by 0.65%, due to uncertainties in the calibration of the optical pyrometer. The error introduced in the measured ΔH by extrapolating the

above equation for log I_B up to 3072°K -- the maximum temperature of the emission experiment -- is not serious because the scattering and S. A. corrections calculated from I_B are small.

The scattered intensities were calculated from the equation, $\log I_S = \log I_B - 2.700$, which corresponds to an effective emissivity, I_S/I_B, of 0.20% for the scattered light. The constant, 2.700, was determined by fitting a line with the Wien's law slope to a plot of $\log I_{meas}$ versus 1/T in such a way that at the lowest temperature of the experiment, I_S was 64% of the total measured intensity I_{meas}. Further data used in determining the scattering contribution was obtained from the intensity measured by PM-2 with the 5175 A NBP and Wratten 58B filter combination (effective wave length of 5180 A).

The intensity measured by PM-2 was a combination of intensity from the Swan (0,0) band of C_2 and from the scattered light at 5180 A. Log I was plotted against 1/T, the measurements having been made concurrently with those of C_3 at 4044.70 A. The asymptotic approach of the plotted points at lower temperatures to the Wien's law slope for 5180 A was somewhat more apparent than it was for C_3. The effective emissivity for the scattered light was again fixed at 0.20%. With the scattered intensity determined in this way, the maximum contribution to the measured intensity was found to be 81%. A certain degree of freedom is possible in positioning the log I_S curves. They could not be raised by more than 0.091 logarithm units, however, or the scattered intensity would exceed the total measured intensity at the lowest temperature. The other extreme would be to neglect the scattered light correction entirely.

The intensity of C_3 emission, I_e, was calculated by subtracting I_S from the measured intensity. Log I_M was obtained by applying the self-absorption correction to I_e. The intensity I_M is proportional to the concentration of excited C_3 in the furnace. The measured and calculated quantities for the emission experiment are given in Table II.

Table II

Results from the determination of the temperature coefficient of emission

Sequence	T, °K	I_{meas}	I_S	I_e	log I_B	%S.A.	log I_M	$\sum$	$\frac{1}{T} \times 10^4$, °K^{-1}
12	2619	20.6	15.1	5.5					
4	2643	35.4	17.2	18.2	The scattered intensity is greater than 25% of the measured intensity for temperatures less than 2750°K. As discussed in the text, data above the dashed line are not included in the sigma plot.				
5	2652	38.3	17.9	20.4					
34	2692	42.1	21.8	20.3					
6	2704	68.5	23.1	45.4					
11	2720	68.3	25.0	43.3					
13	2720	52.6	25.0	27.6					
37	2728	70.9	25.9	45.0					
29	2782	154	34	120	4.225	0.36	2.081	19.979	3.594
9	2829	328	41	287	4.316	0.70	2.461	20.401	3.535
10	2874	602	50	552	4.401	1.10	2.747	20.718	3.480
14	2877	620	51	569	4.407	1.12	2.760	20.736	3.476
16	2891	810	54	756	4.433	1.40	2.884	20.871	3.459
15	2898	860	56	804	4.446	1.44	2.911	20.903	3.451
21	2926	1390	63	1327	4.497	2.12	3.132	21.145	3.418
7	2929	1480	64	1416	4.503	2.22	3.160	21.178	3.414
20	2931	1440	64	1376	4.506	2.15	3.148	21.166	3.412
19	2937	1530	68	1464	4.517	2.23	3.175	21.198	3.405
30	2938	1430	66	1364	4.518	2.07	3.144	21.167	3.404
31	2944	1530	67	1463	4.527	2.17	3.174	21.202	3.398
18	2946	1680	68	1612	4.534	2.36	3.217	21.245	3.394
17	2951	1660	69	1591	4.541	2.29	3.212	21.246	3.389
22	2951	1810	69	1741	4.541	2.50	3.252	21.286	3.389
23	2957	1980	71	1909	4.552	2.68	3.293	21.332	3.382
26	2960	2020	72	1948	4.558	2.70	3.302	21.341	3.378
32	2983	2880	79	2801	4.599	3.52	3.462	21.522	3.352
3	2998	3340	84	3256	4.623	3.88	3.520	21.590	3.336
8	3000	3760	85	3675	4.603	4.58	3.585	21.655	3.333
36	3001	3510	85	3425	4.629	4.02	3.552	21.622	3.332
33	3012	4060	89	3971	4.648	4.46	3.618	21.698	3.320
24	3020	4780	92	4688	4.662	5.10	3.693	21.779	3.311
25	3024	4830	93	4737	4.668	5.10	3.698	21.789	3.307
1	3051	6339	103	6236	4.713	6.04	3.821	21.927	3.278
27	3056	8470	105	8365	4.722	7.92	3.955	22.067	3.272
35	3063	7700	108	7592	4.733	7.02	3.909	22.026	3.265
2	3066	7586	109	7477	4.738	6.84	3.903	22.025	3.262
28	3072	9820	112	9708	4.748	8.67	4.023	22.145	3.255

Sigma Plot for Absorption Experiment

The heat of formation of C_3 may be expressed as

$$\Delta H_T = \Delta H_I + \Delta C_p T, \tag{1}$$

where ΔH_I is heat that would be obtained if the heat capacity were constant to zero ^oK. Substituting ΔH_T into the van't Hoff equation and integrating, yields:

$$\ln P_3 - \frac{\Delta C_p}{R} \ln T = -\frac{\Delta H_I}{RT} + \text{const.} \tag{2}$$

The concentration of C_3 was shown to be proportional to log I_o/I for the absorption experiment. Therefore P_3, the partial pressure of C_3 in the lower state of the transition, is proportional to T log I_o/I. Converting to natural logarithms, noting that 2.303R is equal to 4.575, and combining constant terms - the expression defining sigma is obtained as:

$$\sum = \log \log \frac{I_o}{I} + \left(1 - \frac{\Delta C_p}{R}\right) \log T = -\frac{\Delta H_I}{4.575\ T} + \text{constant.} \tag{3}$$

The value selected for the heat capacity of C_3 depends upon the assumptions made concerning the nature of the observed transition. The total heat capacity should be used if the transition contains contributions from overlapping sequences in each of the vibrational modes. On the other hand, the heat capacity should be reduced about 2R if only progressions or sequences in the bending vibration are important. With the mean temperature of the experiment taken as 3000^oK, the difference in ΔH_T based on the two assumptions is only 0.2 kcal/mole.

The latter assumption was thought to be applicable when the sigma plot was constructed and ΔC_p was calculated to be -8.50 eu. The coefficient for the log T term in Eq. (3) was therefore taken as 5.277. The values calculated for Σ are listed in Table I and are plotted as a function of 1/T in Fig. 4. The order in which the intensities were measured is given by the sequence numbers. The value at 2807°K has been omitted from the sigma plot because a small error in the measured intensities would produce a large error in log I_o/I.

From the best visual estimate for the slope of the sigma plot and from Eq. (1), the measured heat $\Delta H_{3000°K}$ is found to be 174.8 kcal/mole. This is the heat of formation of C_3 in whatever states contributed to the measured absorption intensity. The effective excitation is determined by the relative contribution of each of these states to the intensity. This heat is the standard heat of formation of C_3 only if the effective excitation is the same as that for the entire electronic transition. The latter is simply the heat content for vibration and rotation (24 kcal/mole at 3000°K).

The spectroscopic information is not available for a direct calculation of the effective excitation. That this excitation, however, probably does not differ appreciably from the heat content for vibration and rotation will now be demonstrated.

It appears certain that RT should be included for rotation. For example, in their analysis of the 4050 A band, Kiess and Broida observed an average of ten rotational lines per angstrom from the band head to the last visible line in the R branch.[26] From the observed blending

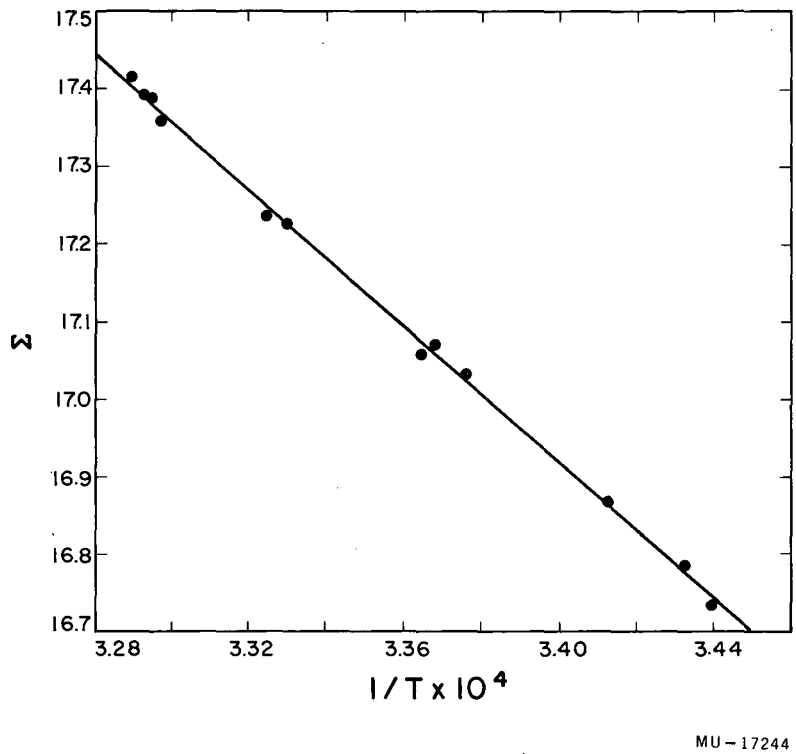

Fig. 4. Sigma plot for absorption experiment.

of lines in the pseudo-continuum, it would not be unreasonable to assume that about ten different bands were contributing to the observed absorption. The spectrograph band pass was 3.2 A. Therefore, the assumption is made that the contribution from the various rotation states was the same as one would obtain by measuring a single, complete band.

The amount of effective vibrational excitation is more difficult to determine. It is apparent that more than one vibrational level is contributing to the absorption. The C_3 molecule has two stretching vibrational modes, ν_1 and ν_3, and a doubly degenerate bending mode, ν_2.

From the vibrational frequencies estimated by Pitzer and Clementi[15] one can calculate that an appreciable portion of the C_3 is in excited vibrational levels. For example, at 3000°K less than 10% is in the ten lowest levels and only 1.5% is in the lowest or (0,0,0) level. A vibrational scheme is suggested in Appendix D and is based on the band heads reported by Kiess and Broida.[26] Sequences in each of the vibrational modes are prominant as one might expect from the nearly equal bond distances reported for the upper and lower states. The underlying pseudo-continuum is undoubtedly composed of many additional overlapping sequences. Because of these sequences, the measured absorption will involve the various excited vibrational levels, and the contribution to the intensity may be expected to parallel the distribution function. Thus the effective excitation of the C_3 is approximately equal to the heat content for vibration and rotation.

The standard heat of formation of C_3 as determined by the absorption experiment is therefore $\Delta H^{o}_{3000^{o}K}$ = 174.8 kcal/mole. For a similar experimental determination at 4071 A, which unfortunately had a much poorer temperature calibration, the measured heat was about 10 kcal/mole larger.

Sigma Plot for Emission Experiment

The form of the sigma equation for an emission experiment is similar to the one used in the last section. The measured intensities, after correcting for scattered light and self-absorption, are proportional to the C_3 concentration in the upper electronic state. Therefore, the heats in Eq. (1) apply to the upper state and will be marked with an (') to indicate this. The partial pressure of C_3 in the upper state is simply proportional to $I_M T$, where log I_M is given for various values of T in Table II. Again, the order of observation is given by the sequence numbers. Taking $\log P' = \log kI_M T = \log I_M + \log T + \text{const}$, and substituting this into Eq. (2), leads to the sigma equation for emission, viz.:

$$\sum{}' = \log I_M + \left(1 - \frac{\Delta C_p}{R}\right) \log T = - \frac{\Delta H_T'}{4.575\ T} + \text{const.} \qquad (4)$$

The stretching frequencies were again omitted in calculating the heat capacity of C_3. From the discussion of the effective excitation this appears to be a mistake. The use of the total heat capacity, however, would have an insignificant effect on the measured heat compared with other uncertainties. Thus with 8.34 eu for ΔC_p, the coefficient of log T was calculated to be 5.197. The values of Σ' calculated with Eq. (4) are listed in Table II and have been plotted against 1/T in Fig. 5. Only those points have been included for which the intensity of scattered light was less than 25% of the measured intensity, so that the slope would not be greatly affected by uncertainties in the scattering correction. The average temperature of the emission determination was taken as 3000°K.

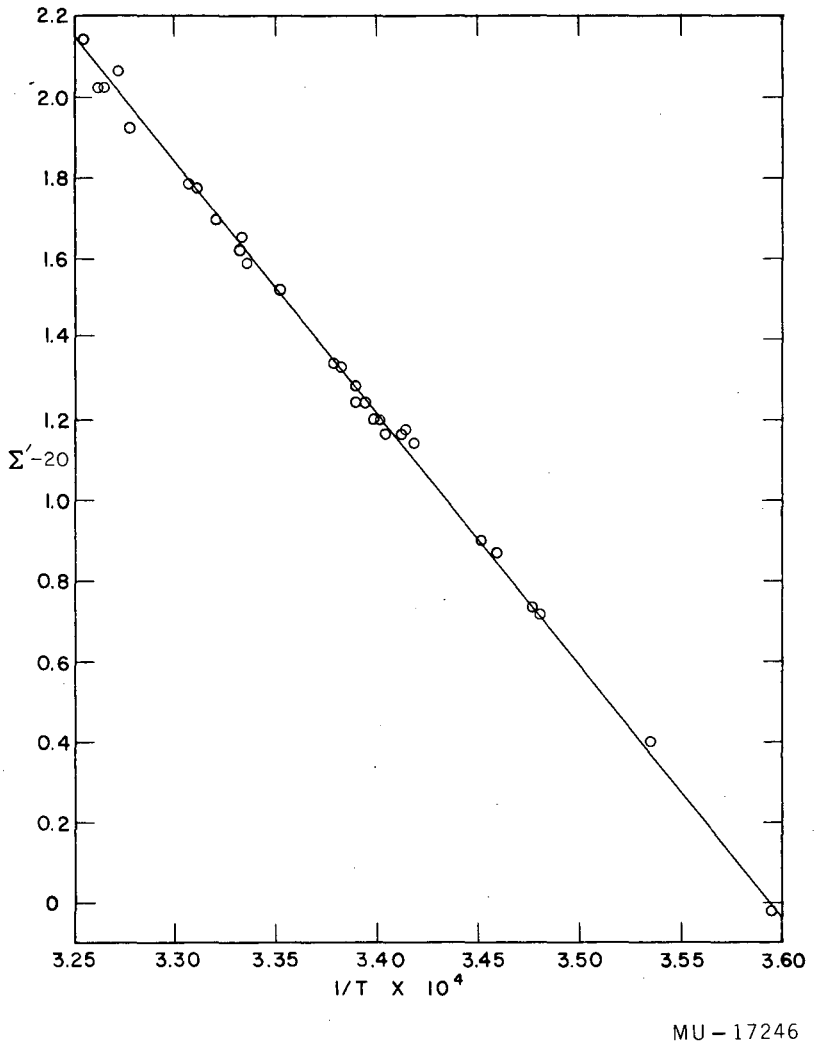

Fig. 5. Sigma plot for emission experiment.

The slope of the sigma plot leads to a measured heat, $\Delta H'_{3000^\circ K}$, of 261.56 kcal for the emission experiment. From this, the effective rotation-vibration excitation for the upper state should be subtracted, followed by subtraction of the term value for the transition. The latter may be taken as either the energy corresponding to the wave length of the emission, 4044.70 A, or to the 4050 A band origin at 24676 cm^{-1}, the difference being only 0.12 kcal. The band origin will be used giving an electronic excitation of 70.54 kcal.

The band pass of the spectrograph was 1.47 A, so that the effective excitation due to rotation will again be taken as RT in the heat content. The best that can be done for vibration is to assume that the effective excitation is the same as it was for the ground electronic state. This is partially justified by the fact that the bond distance is only 1.87% larger in the upper state.[26] The rotation-vibration excitation will therefore be taken to be the same as it was for the absorption experiment.

The order of subtracting the electronic and rotation-vibration excitation is not important, but it is more convenient to subtract the electronic term value first, because the resulting heat may then be compared with the H_T measured in absorption. The result is 261.56 - 70.54 = 191.0 kcal per mole. As was found in absorption, this heat corresponds to the standard heat of formation of C_3 at 3000°K, because all of the vibrational modes are expected to contribute to the effective excitation. If, on the other hand, one assumed that the stretching modes were not important, the measured heat would be increased by 7.6 kcal.

Summary of Results

The results obtained for the heat of formation of C_3 are summarized in Table III, along with spectroscopic information characterizing the measurements. The standard heats of formation at zero ^{o}K have been calculated by subtracting $\Delta H_T^o - \Delta H_o^o = -6.2$ kcal/mole from the measured heats. The heat content data were obtained from Table V (Appendix B) for C_3, and from Stull and Sinke[27] for graphite.

Table III

Results of the heat of formation determination for C_3

Method	λ	$\Delta\lambda$	ΔH_T^o	ΔH_o^o
	Angstroms		kcal/mole	
Absorption	4046.6	3.2	174.8	181.0
Emission	4044.70	1.47	191.0	197.2

DISCUSSION OF RESULTS

The principal causes of error in a second law determination of reaction heats are temperature dependent. A straight line may be fitted to a sigma plot with very little scatter of the experimental results about the line and yet have considerable uncertainty in the slope. One such temperature dependent error is in the calibration of the optical pyrometer.

The pyrometer No. 2 was compared with pyrometer No. 3, SN 709371,* which recently had been calibrated by the National Bureau of Standards (January, 1958). Hicks has shown an appreciable temperature dependent error in an earlier NBS calibration by noting that the effective transmission of the neutral filter for the "XH" scale -- as calculated from the calibration -- varied greatly with temperature.[17] The current calibration does not have that defect. A measure of the maximum uncertainty in the measured heats, due to errors in this calibration, was obtained from the experiment on the emission of the TaC plug. The agreement between the log I versus 1/T slope and Wien's law slope was 0.65%. Because of the slow variation of the neutral filter transmission with temperature, the experimental heats are probably not in error by more than 1%, due to the temperature calibration.

---

*A constant 12°K difference was found between the two pyrometer "XH" scales over the temperature range of interest, pyrometer No. 2 reading higher.

The temperature calibration is based on the International Temperature Scale (ITS, 1948).[28] At temperatures above the Gold point, the ITS and thermodynamic scales diverge, owing to uncertainties in the Gold point itself and also in the defined value for the second radiation constant (C_2 = 1.4380). A thermodynamic quantity based on the latter scale -- such as a dissociation energy determined spectroscopically -- may differ appreciably from the same quantity calculated from data based on the ITS scale. Because of the experimental difficulties involved in measuring reaction heats at high temperature, the discrepancy between the two scales has not been too serious. As more accurate heats are determined, and as research is done at even higher temperatures, the discrepancy will become increasingly apparent.

A more serious type of temperature dependent error that must be considered for the present research, concerns the approach to equilibrium of the C_3 concentration in the furnace. Gaseous carbon species are notorious for their low evaporation coefficients. Much of the difficulty that was encountered in determining the heat of sublimation of graphite was due to this.

For the purpose of calculating the C_3 partial pressure actually obtained relative to the equilibrium value, the King furnace hot zone may be considered to be a cylinder, 6 in. long and 3/8 in. diameter. The baffle faces at each end of the hot zone were about 200° cooler than the hot zone itself. Thus, the C_3 formed by the sublimation of the graphite from along the cylinder wall diffused through the inert gas

(15 cm Hg pressure of argon) and condensed on the faces of the baffles. On this basis the partial pressure of C_3 may be calculated as a function of distance along the tube and for various reasonable values of the evaporation coefficient. The details and results of this calculation are given in Appendix A.

Thorn and Winslow have estimated an evaporation coefficient for C_3 of 0.08.[29] It is probably not less than 0.01. From Table IV in the Appendix, it can be seen that even for an evaporation coefficient of 10^{-4}, the measurement of the heat of formation of C_3 would not be appreciably affected. In fact, the effect of the evaporation coefficient is so small that some thought must be given to the possibility that higher polymeric species of carbon -- in particular, C_5 -- may be contributing to the observed emission.

The evaporation coefficient of C_5 is undoubtedly less than for C_3, but the diffusion coefficient will also be less. The net effect may be that C_5 approaches its vapor pressure because of its low diffusion coefficient in the argon. The heat of formation has not been measured for C_5, but from the predictions of Pitzer and Clementi, its equilibrium pressure may even be greater than for C_3. Their prediction of the energy required to excite C_5 is not so precise that one would necessarily expect the spectrum to overlap that of C_3, although it may do so. The mass action experiments by Phillips and Brewer indicate that the furnace emission (and therefore, also absorption) is predominantly C_3 at the wave lengths used to measure temperature coefficients in the present work. The heat that was measured is, therefore, the average of the

heats for C_3 and C_5 -- the weighting depending on the relative intensities of the two species. The contribution of C_5 to the measured heat is thought to be small, although the final answer on this point must await further knowledge of C_5.

Several experiments are suggested for the investigation of the C_5 spectrum. The intensity should be measured at various wave lengths for which absorption in the furnace has been observed (including the far U.V.) and for various partial pressures of carbon. That is, the mass action law should be applied (either in emission or absorption) at wave lengths where C_5 may be important. By repeating this experiment with different pressures of inert gas in the furnace, the contributions due to C_3 and C_5 may be separated because at some pressure, the C_5 partial pressure would be appreciably lower than its equilibrium pressure, while the C_3 would still be near equilibrium. This follows from the lower evaporation coefficient for C_5. Although it is doubtful that one could determine the heat with sufficient accuracy to differentiate between C_3 and C_5, repeating the mass action experiment at different temperatures may also be desirable.

A possible source of error that would cause the heat determined from the absorption experiment to be significantly low without appreciably affecting the emission heat, involves the nature of the scattered light. This light was assumed to be scattered by dust on the window and lens, and not from dust suspended in the furnace. On this assumption, no correction was made of the intensity measured in absorption, because the light beam would be attenuated the same with the furnace on as with it off.

The intensity of scattered light was shown to vary as a black-body. Thus at 3000°K, the scattered intensity doubled for about every 200° rise in furnace temperature. A more rapid increase would have been observed if the furnace dust contributed appreciably because the concentration of dust would be expected to increase with temperature. Since only a small amount of the observed scattering can be due to dust in the furnace, the scattering correction for emission is not appreciably affected.

The effective emissivity for the total scattered light was found to be between 0.2% and 0.5% in several different experiments. If we assume, as an upper limit, that 0.1% corresponded to scattering from dust that was present only while the furnace was on -- then the heat measured in absorption would be too low by 13 kcal.

A similar source of error is from atomic impurities in the graphite. The intensity from atomic emission is always high when a tube is first heated. Most impurities quickly diffuse to cooler regions of the tube where they deposit as a shiny coating. Photographic plates taken with the 21-foot grating spectrograph have shown that the only significant atomic emission in the spectral regions used for determining the heat for C_3 are from potassium and iron.

The intensity of any atomic impurity as measured by spectrograph A (in this case, the 21-ft spectrograph) is diluted by a factor, $\Delta\lambda_B^2/\Delta\lambda_A\ (\lambda_i - \lambda_B + \Delta\lambda_B)$ when measured by a spectrophotometer B, that has a much larger instrumental width, $\Delta\lambda_B$. The wave lengths λ_i and λ_B refer to the wave length for the impurity and the wave length setting

of the spectrophotometer. This is the situation with respect to the measurement of the C_3 intensity.

The darkening on a typical plate taken on the 21-ft spectrograph and due to the K 4044 A and K 4047 A lines* was barely visible above the background from C_3 when the furnace was 3000°K. The ratio of the instrumental widths, $\Delta\lambda_B/\Delta\lambda_A$, was about 100 for the absorption experiment and 200 for the emission experiment. Therefore, the emission by potassium has a negligible effect on the measured C_3 intensity.

The emission by the Fe 4045.8 A line was somewhat stronger when photographed on the 21-ft spectrograph. A rough determination of the intensity indicated that it was probably not more than ten times the C_3 intensity, when the furnace was 3000°K, and that it did not increase significantly with temperature. Therefore, in terms of the intensities measured during either the absorption or emission experiment -- after applying the dilution factor -- the contribution of the Fe impurity is estimated to be about 1% at 3000°K, and appears to be slowly varying with temperature. This is an upper limit to the Fe contribution, because the furnace had not been degassed so well as for the measurements of the heat.

The uncertainty in the emission heat due to the scattering correction will now be considered. In the last chapter, it was shown that log I_S could not reasonably be increased by more than 0.091

---

*The spectral range in the emission experiment did not include the 4047 A line.

logarithmic units. The resulting scattering correction would increase the measured heat, at most, by only 2 kcal. Neglecting the scattering correction completely would decrease the heat about 4 kcal, and at the same time introduce a noticeable curvature to the low temperature end of the sigma plot. Neglecting the self-absorption correction would decrease the heat by only 5 kcal. Therefore, a small uncertainty in the correction itself will have a negligible effect on the heat. The resulting uncertainty in the emission heat, owing to the scattering and self-absorption corrections, is therefore $\pm$ 3 kcal.

The principal source of uncertainty in the absorption experiment -- aside from the fact that dust and Fe in the furnace would cause the measured heat to be too low -- was in the determination of the temperature from the photopyrometer. A 4% uncertainty in the slope of the calibration equation produced an uncertainty of 8 kcal in the measured heat. The scatter in the sigma plot gave about 6 kcal, while the uncertainty in the effective excitation may be taken as 4 kcal. Combining these estimates with the uncertainty in the optical pyrometer -- and the possible lowering of the heat by Fe and by scattering -- the total range of uncertainty in the heat measured in absorption is estimated to be from plus 20 kcal to minus 10 kcal.

The temperature range of the emission experiment was about twice that of the absorption experiment. Because of the larger heat that was measured, however, the scatter of the emission results in the sigma plot produced an uncertainty of about 7 kcal. Combining this with the uncertainties due to the effective excitation, optical pyrometer calibration, and scattering correction -- the total uncertainty is estimated as $\pm$ 10 kcal.

CONCLUSIONS

The standard heat of formation for the C_3 molecule has been determined from measurements of the temperature coefficient of spectral intensity. The intensities were measured both in absorption and in emission. The heat measured in absorption was found to be $\Delta H_0^0 = 181$ kcal per mole. The range of uncertainty in this value is plus 20 kcal to minus 10 kcal per mole.

The heat of formation, determined in emission, is $\Delta H_0^0 = 197 \pm 10$ kcal per mole. A greater degree of reliability has been placed on this value because of a tendency for several temperature dependent errors to cancel one another.

The heat capacity, heat content, entropy, and free energy functions for C_3 have been tabulated for temperatures from 2000°K to 4000°K (See Table V in Appendix B). These quantities were calculated, in part, by Pitzer and Clementi,[15] and corrected for certain errors incorporated in existing tables.*

The quantities in Table V were used to correct the heats of formation of C_3 reported by Thorn and Winslow[29] and by Chupka and Inghram.[2] Their heats have therefore been put on an equivalent basis with the heats determined in this research. Their corrected values will be given for comparison. The details of the calculation are reported in Appendix C.

---

*See, for example, Ref. 27.

Thorn and Winslow's value is $\Delta H_0^0 = 188$ kcal per mole, obtained from a Knudsen experiment in which the sum of the effusing carbon species was the experimentally observed quantity. The most reliable value for the heat of formation of C_3 comes from the mass-spectrometric determination by Chupka and Inghram. They report both second and third law values, which, after correction are 192 $\pm$ 10 kcal and 187 $\pm$ 7 kcal per mole, respectively.

The agreement among the various determinations is well within the reported uncertainties. This is especially encouraging when one considers the differences among the various experimental techniques that were employed.

This author feels that the best value for the heat of formation of C_3, on the basis of data now available, is $\Delta H_0^0 = 189 \pm 5$ kcal per mole, at least when used with the heat content data quoted in Table V.

From the interrelation of the following data, certain conclusions are reached concerning the nature of the C_3 pseudo-continuum.

1. My value of the heat -- as determined by the intensity in emission and absorption of a portion of the continuum -- is essentially in agreement with the heat determined by the mass-spectrometer.

2. This agreement supports the findings of Phillips and Brewer that the pseudo-continuum was produced by C_3.

3. The value of the oscillator strength for the pseudo-continuum, as determined by comparing its integrated absorption coefficient to the concentration of C_3, is reasonable. The concentration was calculated

from Pitzer and Clementi's free energy function and $\Delta H_o^o = 189$ kcal.

4. The calculations of Pitzer and Clementi have indicated that the ground state of C_3 is a $^1\Sigma_g^+$ state and that no other low-lying states are to be expected. They also predict a $^1\pi_u$ state with about 3 ev excitation, but no other state that would have an allowed transition to the ground state with comparable excitation. And finally:

5. The rotational analysis and isotopic studies of the 4050 A Swings band by Douglas were based on a transition between a Σ and a π state and were shown to be produced by C_3. The B value leads to a bond distance for C_3 that is in agreement with the bond energy calculated from $\Delta H_o^o = 189$ kcal.*

Therefore, we conclude that the pseudo-continuum is from C_3; that the transition is $^1\pi \longleftrightarrow {}^1\Sigma_g^+$; that the transition of the Swings bands is identical; and that the $^1\Sigma_g^+$ is the ground state for C_3.

The differences in the appearance of the C_3 spectrum produced by various sources may now be explained. The emission from comets has very low rotational excitation. Relatively few vibrational levels contribute. Probably only those levels having strong transitions with the lowest vibrational level of the ground state are important.

The discharge spectra have a somewhat greater rotational excitation but still do not involve many excited vibrational levels. These spectra from flames, furnaces and other sources that approach thermal equilibrium are much richer. The strongest bands may be followed to somewhat higher

---

*The average bond energy is $(3 \times 169.58 - 189)/2 = 160$ kcal. The bond distance is 1.281 A.

J values, but the principal reason for the greater complexity comes from the population of a large number of excited vibrational levels.

The importance of closely spaced sequences in the spectrum may be seen from the vibrational scheme presented in Appendix D. Only transitions involving the lower few vibrational levels produce recognizable band heads. Many sequences, however, originate from excited levels. These sequences overlap and blend together giving the unresolved structure referred to as the pseudo-continuum. The Swings bands are simply prominent features of the same electronic transition that produces the pseudo-continuum.

ACKNOWLEDGMENTS

I wish to extend my sincere thanks to Professor Leo Brewer who suggested this problem. His keen insight and understanding have been a continuing inspiration.

The use of the spectroscopic equipment of Professors Francis A. Jenkins and John G. Phillips is gratefully acknowledged.

I am deeply indebted to Professor Kenneth S. Pitzer and Dr. Enrico Clementi for many valuable discussions and especially for permission to use their results prior to publication.

Special thanks to Mrs. Jane Waite for her secretarial assistance and advice.

This work was performed under the auspices of the U. S. Atomic Energy Commission.

APPENDIX A

The Effect of the Evaporation Coefficient on Equilibrium

The derivation of the differential equation used to calculate the deviation from equilibrium in the furnace was based on a detailed mass balance of the vaporization and condensation of C_3 at each point along the axis of the hot zone and on the steady state diffusion, through 0.2 atmospheres of argon, to the end of the hot zone where it condensed. The equation for mass transport is:

$$44.33\sqrt{M/T}\,(\alpha\, P_{eq} - \alpha' P_x)\, S_v/f\, dx = S_c\, dq \qquad (5)$$

where the expression on the left is the difference between the amount of C_3 in g/sec evaporating and condensing between x and x + dx, per unit length of hot zone. The equilibrium pressure, P_{eq}, and the pressure obtained in the furnace, P_x, are in atmospheres. The evaporation coefficient, α, and condensation coefficient, α', will be assumed to be equal. The vaporization area, S_c, is measured from the center of the furnace (x = 0), to the baffle at x = f. The portion of the equation with the molecular weight, M, the absolute temperature, T, and the conversion constant has the usual form for evaporation calculations.

The right hand side of the equation gives the difference between the amount of C_3 leaving the infinitesimal volume at x + dx and the amount entering at x, by diffusion. S_c is the cross-sectional area

and q is defined as:

$$q = - D \frac{dN_x}{dx} = - \frac{DM}{RT} \frac{dP_x}{dx} , \tag{6}$$

where D is the coefficient of molecular diffusion of C_3 through the excess argon and the differentials are the concentration gradient and pressure gradient along the axis of the tube.

Instantaneous mixing in the infinitesimal volume, dx, is assumed, thus avoiding the problem of radial diffusion and the corresponding pressure drop from the wall to the axis of the tube. By defining the quantity,

$$k^2 = 44.33 \sqrt{M/T} \quad \frac{\alpha S_v RT}{f S_c DM} , \tag{7}$$

Eq. (5) takes the form

$$\frac{d^2P_x}{dx^2} - k^2P_x = k^2 P_{eq} \tag{8}$$

which is a nonhomogeneous, linear, differential equation of second order.

From standard methods for solving differential equations, the general solution for Eq. (8) is obtained as:

$$P_x = P_{eq} + C_1 e^{kx} + C_2 e^{-kx} .$$

By applying the boundary conditions that $P_x = 0$ at $x = f$, and that

P_x is less than P_{eq} for all values of x, the arbitrary constants are found to be $C_1 = 0$, and $C_2 = -P_{eq}\, e^{kf}$. The problem has thus been solved and the final form of the equation is

$$P_x/P_{eq} = 1 - e^{k(x-f)} \quad .$$

The numerical solution of this equation requires an estimate of the coefficient of interdiffusion, which may be obtained from the equation*

$$D = \frac{\sqrt{v_1^2 + v_2^2}}{3\pi\,(n_1 + n_2)\,\delta_{12}^2} \quad .$$

The value of n_2, the concentration of argon corresponding to 0.2 atmospheres at 3000°K, is found to be 4.9×10^{17} atoms/cm^3, which is much larger than the concentration n_1 of C_3. The average velocities are, respectively, 1.26×10^5 and 1.33×10^5 cm/sec. The viscous diameter of 5.15 A was estimated for C_3 by multiplying the value for CO_2 by the ratio of their bond distances. Using 3.67 A for argon, the average value, δ_{12}, was taken as 4.42×10^{-8} cm. From this, the diffusion coefficient was calculated to be 28.7 cm^2/sec. Taking the values for S_v/S_c as 32, f = 7.62 cm, and T = 3000°K, the value for k, defined by Eq. (7), is calculated to be $70\sqrt{\alpha}$. The approach to equilibrium for the C_3 partial pressure, based on the diffusion through 0.2 atmospheres of argon, has been calculated for several positions in the furnace and for evaporation coefficients of 1, 10^{-2}, 10^{-4} and 10^{-6}. The results are presented in Table IV.

---

*See Ref. 30, p. 75.

Table IV

Values calculated for P_x/P_{eq} for various values of the evaporation coefficient. The ratio is zero at x = 7.62 cm

α	Distance x_1 from center of furnace in cm			
	0	2.62	5.62	7.52
1	1.000	1.000	1.000	0.999
10^{-2}	1.000	1.000	1.000	0.503
10^{-4}	0.995	0.970	0.753	0.068
10^{-6}	0.414	0.295	0.148	0.009

APPENDIX B

Table of Thermodynamic Properties of the C_3 Molecule

The need for an internally consistent compilation of thermodynamic data cannot be stressed too strongly. Such a compilation for the elements is that of Stull and Sinke.[27] One difficulty with this kind of compilation is that "the best available data" do not stay so for long.

The data for C_3 in the above were calculated from the degeneracy and vibrational constants estimated by Glockler.[31] Unfortunately, these are in error. The ground state is $^1\Sigma$, and therefore singly degenerate. This has an effect of lowering the calculated values of ΔS_T and the free energy function by R ln 5. These quantities must also be reduced because the vibrational frequencies used by Glockler were too low.

Pitzer and Clementi have estimated the vibrational frequencies for C_3 and find $\nu_1 = 1300$, $\nu_2 = 550$ and $\nu_3 = 2200$ cm^{-1} where ν_2 is for the doubly degenerate bending mode.[15] It is interesting to note that if the bending force constant for C_3 is assumed to be the same as for CO_2, the same type of calculation leads to $\nu_2 = 565$ cm^{-1}.

Values for the high temperature heat content, entropy, and free energy functions have been calculated by Pitzer and Clementi and are listed in Table V.[15] The corresponding values have been calculated for 298.15°K as well as the heat capacity for each temperature. The free energy functions for the formation of C_3 from its reference state (graphite) also have been included. The Stull and Sinke values were used for graphite and extrapolated by a smoothed extension of their

differences at 100° intervals. Fickett and Cowan have calculated values for the heat content and entropy of graphite at 4000°K.[32] The free energy function calculated from their data is only 0.08 eu less than the value used here.

Table V

Thermodynamic properties of the C_3 molecule

T, °K	C_P	$H^o_T - H^o_o$	S^o_T	$\frac{-(F^o_T - H^o_o)}{T}$	$\frac{-(\Delta F^o_T - \Delta H^o_o)}{T}$
298.15	9.39	2319	50.76	42.98	38.87
2000	14.35	24420	74.03	61.82	45.82
2500	14.54	31644	77.25	64.59	45.39
3000	14.64	38851	79.89	66.93	45.04
3500	14.71	46288	82.18	68.95	44.71
4000	14.75	53652	84.14	70.73	44.34

APPENDIX C

Values of ΔH_o^o Obtained from the Literature

The thermodynamic properties in Appendix B are used to correct the heats of formation for C_3 as reported by Thorn and Winslow[27] and by Chupka and Inghram.[2] The latter authors report values determined by both the slope method (ΔH_o^o = 200 ± 10 kcal) and the absolute pressure method (ΔH_o^o = 199 ± 7 kcal), that is, the second and third law methods, respectively.

Chupka and Inghram state that they used Glockler's free energy functions to obtain their third law value. If the temperature of their determination is assumed to be 2400°K the experimentally observed value may be reconstructed. That is $-\Delta F^o_{2400^oK}/T$ = 32.40 eu, which corresponds to a pressure of 8.3×10^{-8} atmosphere.

Interpolation of the free energy functions for the reaction listed in Table V, leads to the value, 45.50 eu, for 2400°K. By adding to this the $-\Delta F^o_{2400^oK}/T$, just determined and multiplying by T, I obtain ΔH_o^o = 187.0 kcal per mole for the corrected third law heat of Chupka and Inghram.

These authors do not state the value for the heat content that they used in obtaining the second law value of ΔH_o^o, but from the slope of their sigma plot, one would estimate that they have reported a value about 10 kcal too high. Fortunately, Thorn and Winslow have reported an

expression obtained by a least squares treatment of Chupka and Inghram's original data, thus salvaging a determination that must be considered excellent in all other respects. The expression is $\log I_3^+T = -41174.5/T + 20.258$ from which the experimental heat is calculated to be $\Delta H^o_{2400^oK} = 188.4$ kcal. Using the heat content data from Table V for C_3, and from Stull and Sinke for graphite, $\Delta H^o_{2400^oK} - \Delta H^o_o$ is calculated to be -3.5 kcal. Subtracting this from the corrected experimental value, I obtain $\Delta H^o_o = 191.9$ kcal per mole for the second law determination of Chupka and Inghram.

Thorn and Winslow also give a similar expression for the logarithm of the C_3 partial pressure, obtained by subtracting the contribution of C and C_2 from their experimentally observed total pressure. The expression is $\log p_3 = -40296.0/T + 9.811$ from which they obtain $\Delta H^o_{2400^oK} = 184.4$ kcal per mole and $S^o_{2400^oK} = 77.41$ eu. The value of $\Delta H^o_{2400^oK} - \Delta H^o_o$ is again taken as -3.5 kcal, thus giving the corrected value as $\Delta H^o_o = 187.9$ kcal per mole. It is interesting to note that their value of the entropy agrees within 0.64 eu with the interpolated value in Table V, but is 4.71 eu below the value given by Stull and Sinke.

The resulting heats of formation of C_3, calculated from the experimental determinations of these authors, and referred to zero ^oK on the basis of the properties listed in Table V for C_3, and Stull and Sinke for graphite -- are summarized as follows:

		ΔH^o_o kcal/mole
1.	Chupka and Inghram, third law	187.0
2.	Chupka and Inghram, second law	191.9
3.	Thorn and Winslow	187.9

APPENDIX D

A Suggested Vibrational Scheme

By assuming certain values for the vibrational frequencies, a reasonable structure for the C_3 spectrum may be synthesized. Although the details of this structure cannot be expected to be correct the gross features can be used to explain the observed complexity and the types of transitions that may be obtained.

The starting point of this synthesis was the observation by Kiess and Broida of a number of apparent band heads from 3634 A to 4160 A.[26] They have noted wave number differences of 133, 264, and 523 cm^{-1} between many of these heads. Although it is tempting to associate the larger of these with the bending frequency, more careful consideration shows that this is not possible. For the 523 cm^{-1} to correspond to the bending frequency, progressions would be required in which v_2 changed in unitary steps. Sponer and Teller have shown that for the transition to be allowed, v_2 and also v_3 must change by an even number of quanta.[13] The observed differences are essentially integral multiples of 130 cm^{-1}. This probably corresponds to a difference in vibrational frequency between the two states, the spectrum being formed by sequences.

The band heads reported by Kiess and Broida may be arranged in several sequences. A few of these will now be given with the differences between successive heads in cm^{-1} placed in parentheses.

27510(132)27378(130)27248(136)27112(135)26977(3x131)26585...25471(129)
25342(141)25201(135)25066(127)24939(127)24812(126)24686(136)24550(129)
24421(128)24293(135)24158(128)24030.

26421(130)26291(148)26143(141)26002...25170(143)25027(147)24880(145)
24735(141)24594.

26912(167)26745(160)26585(164)26421...25374(173)25201(174)25027(175)
24852(166)24686; 25107(168)24939(181)24758(164)24594(173)24421.

27112(200)26912...25342(195)25147(201)24946(211)24735(185)24550.

The pattern is by no means perfect. Nor should one expect it to be. Undoubtedly a number of accidental spacings have been included and each group may actually be composed of several sequences. It appears that C_3 will have to be produced with low excitation before a vibrational assignment can be made.

Reasonable values for the differences in vibrational frequencies may be inferred from the above list. For the purpose of synthesizing a spectrum, it is assumed that $\Delta\nu_1 = 170\ cm^{-1}$, $\Delta\nu_2 = 130\ cm^{-1}$ and $\Delta\nu_3 = 200\ cm^{-1}$. The values estimated by Pitzer and Clementi for the ground state vibrational frequencies are used.[15] The frequencies for the two states are taken to be:

$$v_1' = 1130\ cm^{-1} \qquad v_2' = 420\ cm^{-1} \qquad v_3' = 2000\ cm^{-1}$$

$$v_1'' = 1300\ cm^{-1} \qquad v_2'' = 550\ cm^{-1} \qquad v_3'' = 2200\ cm^{-1}.$$

The bond energy is probably greater for the lower state, as may be inferred from the slightly smaller bond distance. Therefore the frequencies were assumed to be smaller in the upper state.

In Fig. 6 a portion of the spectrum has been constructed based on the above frequencies. Transitions involving states with more than 5000 cm^{-1} of vibrational excitation have been omitted. The spectrum has also been kept relatively simple by the requirement that $2\Delta v_1 + \Delta v_2 + 4\Delta v_3 = 0, \pm 2$ where the Δv's are differences in the vibrational quantum numbers for the upper and lower states.

The sloping straight lines correspond to sequences in each of the vibrational modes starting from the transition listed at the left. Each transition is labeled with two 3-digit numbers that designate the number of vibrational quanta in the three vibrational modes of the upper and lower states. The letter a, b, or c indicates the value +2, 0, or -2 respectively for the above summation. An energy scale has been placed on the right to give the separation in cm^{-1} between the band in question and the principal or 000-000 band which has its head at 24686 cm^{-1}. The abscissa indicates the vibrational running numbers for each of the sequences. These running numbers indicate the increments in the vibrational quantum numbers above the starting member for each sequence. For example, the 000-000 transition is the starting point for the following sequences:

Sequence in v_1: 000-000, 100-100, 200-200....

Sequence in v_2: 000-000, 010-010, 020-020....

Sequence in v_3: 000-000, 001-001, 002-002....

Another example of a sequence in v_2 would be: 002-140, 012-150, 022-160.... Each point of intersection of the straight lines with integral values of the vibrational running numbers represents an R-branch band head.

Therefore, associated with each point there is a P, Q, and R branch which is degraded toward the red. The maximum intensity for a branch occurs with the rotational quantum number, $J = 50$ when the temperature is $3000^{\circ}K$. The maximum intensity occurs 92, 50, and 9 cm^{-1} to the red of the band head for the P, Q, and R branches of the 4050 A band.

The general appearance of the synthetic spectrum would be modified slightly if additional states had been included. The complexity of overlapping sequences would increase to the violet of the system origin (positive energies of separation). On the other hand, additional transitions to the red would tend to spread out more.

The transitions for which the vibrational quantum numbers do not change would be expected to be more intense on the basis of the Franck-Condon principle. Because the nuclear separation is slightly larger in the upper state the transitions to the violet may be relatively intense.

The intensity distribution in the C_3 spectrum is quite reasonable on the basis of the synthetic spectrum and the above discussion. The 4050 A band (i.e., 000-000) and the 4072 A band (probably 010-010) are sufficiently intense to stand out above the pseudo-continuum. The pseudo-continuum is formed by the blending together of many weaker bands. The observed intensity decreases rapidly to the red but more gradually to the violet. Finally, the secondary maximum of intensity observed by Phillips and Brewer[8] at 4300 A agrees quite well with the greater density of transitions at about -1200 cm^{-1} in the synthetic

spectrum. Transitions with $\Delta v_1 = -1$ or $\Delta v_2 = -2$ are important for the formation of the secondary maximum.

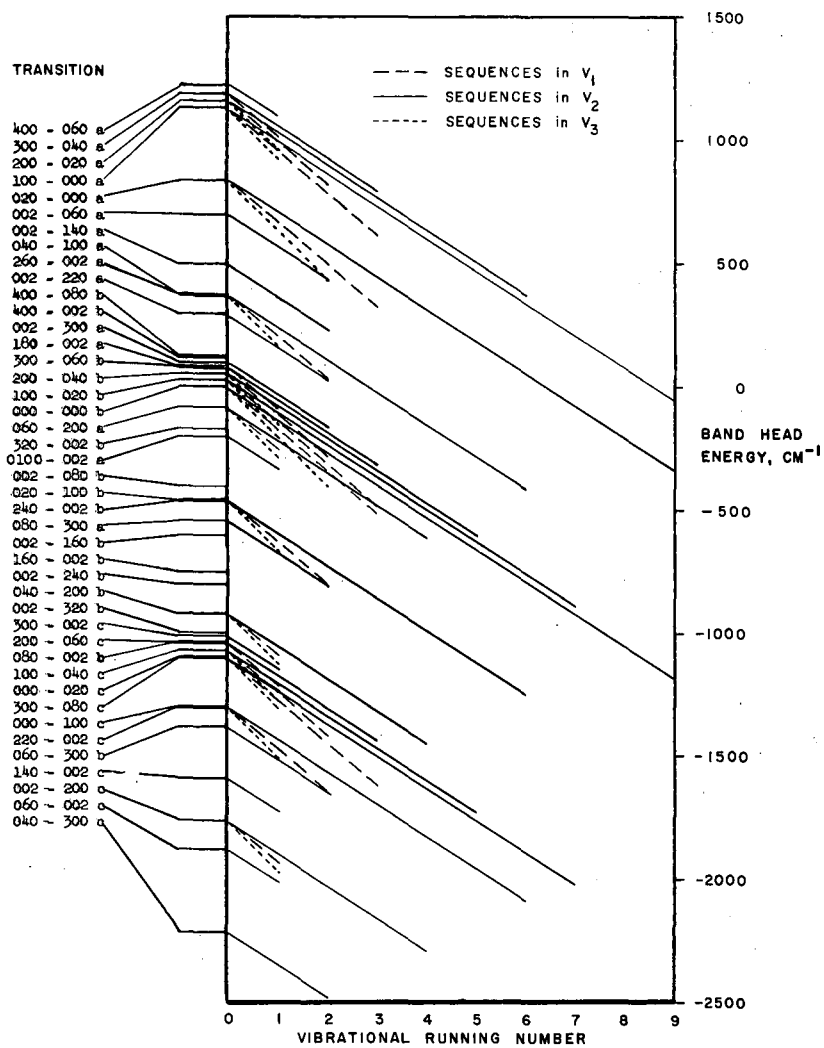

MU-17284

Fig. 6. Synthetic spectrum for C_3. Band head energies relative to the 000-000 transition are plotted for sequences involving states with not more than 5000 cm^{-1} excitation.

REFERENCES

1. K. Clusius and A. E. Douglas, Can. J. Phys. 32, 319 (1954).
2. W. A. Chupka and M. G. Inghram, J. Phys. Chem. 59, 100 (1955).
3. P. Swings, Rev. Mod. Phys. 14, 190 (1942).
4. G. Herzberg, Astrophys. J. 96, 314 (1942).
5. G. Herzberg, Mem. Soc. Roy. Sci. Liège, Ser. 4, 15, 291 (1955).
6. B. Rosen and P. Swings, Annales D'Astrophysique 16, 82 (1953).
7. W. R. S. Garton, Proc. Phys. Soc. A66, 848 (1953).
8. J. G. Phillips and L. Brewer, Mem. Soc. Roy. Sci. Liège, Ser. 4, 15, 341 (1955).
9. G. V. Marr and R. W. Nicholls, Can. J. Phys. 33, 394 (1955).
10. G. V. Marr, Can. J. Phys. 35, 1265 (1957).
11. G. V. Marr, Pubs. Astron. Soc. Pacific 70, 197 (1958).
12. G. Herzberg, Molecular Spectra and Molecular Structure, Vol. I, (D. Van Nostrand, New York, 1950).
13. H. Sponer and E. Teller, Rev. Mod. Phys. 13, 75 (1941).
14. J. G. Phillips, Mem. Soc. Roy. Sci. Liège, Ser. 4, 18, 538 (1957).
15. K. S. Pitzer and E. Clementi, Large Molecules in Carbon Vapor, UCRL-8675, March 1959. (Submitted for publication).
16. L. Brewer and A. W. Searcy, Ann. Rev. Phys. Chem. 7, 259 (1956).
17. William T. Hicks, Spectroscopy of High Temperature Systems (Thesis), UCRL-3696, February, 1957.
18. L. Brewer, P. W. Gilles and F. A. Jenkins, J. Chem. Phys. 16, 797 (1948).
19. John G. Phillips, Astrophys. J. 119, 274 (1954).
20. Earl F. Worden, Jr., High Intensity Light Sources, (Part II of Thesis) UCRL-8509, October, 1958.

REFERENCES

(-2-)

21. A. C. G. Mitchell and M. W. Zemansky, Resonance Radiation and Excited Atoms, (Cambridge University Press, London, 1934)

22. G. V. Marr, Can. J. Phys. 35, 1275 (1957).

23. E. B. Wilson, Jr., and A. J. Wells, J. Chem. Phys. 14, 578 (1946).

24. A. L. Floyd and R. B. King, J. Op. Soc. Am. 45, 249 (1955).

25. J. A. Smit, Physica 12, 682 (1946).

26. N. H. Kiess and H. P. Broida, Can. J. Phys. 34, 1471 (1956).

27. D. R. Stull and G. C. Sinke, Thermodynamic Properties of the Elements (American Chemical Society, Washington, D. C., 1956). No. 18 of the Advances in Chemistry Series.

28. R. J. Corruccini, J. of Res. of NBS 43, 133 (1949).

29. R. J. Thorn and G. H. Winslow, J. Chem. Phys. 26, 186 (1957).

30. Saul Dushman, Scientific Foundations of Vacuum Technique (John Wiley, New York, 1949).

31. George Glockler, J. Chem. Phys. 22, 159 (1954).

32. W. Fickett and R. D. Cowan, J. Chem. Phys. 23, 1349 (1955).

This report was prepared as an account of Government sponsored work. Neither the United States, nor the Commission, nor any person acting on behalf of the Commission:

A. Makes any warranty or representation, expressed or implied, with respect to the accuracy, completeness, or usefulness of the information contained in this report, or that the use of any information, apparatus, method, or process disclosed in this report may not infringe privately owned rights; or

B. Assumes any liabilities with respect to the use of, or for damages resulting from the use of any information, apparatus, method, or process disclosed in this report.

As used in the above, "person acting on behalf of the Commission" includes any employee or contractor of the Commission, or employee of such contractor, to the extent that such employee or contractor of the Commission, or employee of such contractor prepares, disseminates, or provides access to, any information pursuant to his employment or contract with the Commission, or his employment with such contractor.