UCRL 8775

UNIVERSITY OF CALIFORNIA

Ernest O. Lawrence Radiation Laboratory

TWO-WEEK LOAN COPY

This is a Library Circulating Copy which may be borrowed for two weeks. For a personal retention copy, call Tech. Info. Division, Ext. 5545

BERKELEY, CALIFORNIA

DISCLAIMER

This document was prepared as an account of work sponsored by the United States Government. While this document is believed to contain correct information, neither the United States Government nor any agency thereof, nor the Regents of the University of California, nor any of their employees, makes any warranty, express or implied, or assumes any legal responsibility for the accuracy, completeness, or usefulness of any information, apparatus, product, or process disclosed, or represents that its use would not infringe privately owned rights. Reference herein to any specific commercial product, process, or service by its trade name, trademark, manufacturer, or otherwise, does not necessarily constitute or imply its endorsement, recommendation, or favoring by the United States Government or any agency thereof, or the Regents of the University of California. The views and opinions of authors expressed herein do not necessarily state or reflect those of the United States Government or any agency thereof or the Regents of the University of California.

UCRL-8775

UNIVERSITY OF CALIFORNIA
Lawrence Radiation Laboratory
Berkeley, California

Contract No. W-7405-eng-48

CONTROLLED THERMONUCLEAR RESEARCH QUARTERLY REPORT

March, April, May 1959

June 10, 1959

Printed for the U. S. Atomic Energy Commission

CONTROLLED THERMONUCLEAR RESEARCH QUARTERLY REPORT

March, April, May 1959

Contents

GENERAL INTRODUCTION 4

I. PYROTRON (MAGNETIC MIRROR) PROGRAM

Introduction and Summary 6
Magnetic High-Compression Experiments 7
Electron-Distribution Analysis 9
Adiabatic Low-Energy Injection and Capture Experiment (ALICE) 10
P^4 Progress Report 14

II. HIGH-ENERGY INJECTION

Calculation of Plasma Buildup from High-Energy Injection 16
Beta-Ray Experiment 20
Ion-Source Development 29

III. ASTRON PROGRAM

Introduction and Summary 34
Electron-Layer Calculations (continued) 35
Astron dc Test 37

IV. LIVERMORE PINCH PROGRAM 40

"Hard-Core" Pinch Experiment 40
Electron-Beam Experiment 45
Plasma-Acceleration Experiment 46
Sodium Radiofrequency Analog Experiments 46
300-kv Matrix Marx Bank 46
Sodium Pinch Experiment 46
The Levitron 47
High-Field Experiments 47

V. BERKELEY PINCH PROGRAM

The Tubular Pinch 49
Study of Radiation from the Tubular Pinch 52
Homopolar III 54

VI. ION MAGNETRON

Ionization in the Ion Magnetron 55

*Preceding report: UCRL-8682

VII. THEORETICAL RESEARCH

Transport Coefficients 64
Hydromagnetic Stability of a Diffuse Linear Pinch 65
Boundary-Layer Formation in the Pinch 65
A New Particle-Orbit Code (Spiral) 66

VIII. BASIC EXPERIMENTAL RESEARCH

Hothouse--Hydromagnetic Wave Propagation 67
Ion Cyclotron Resonance Heating 72
Microwave and Beam-Interaction Studies 74
Dissociation of D_2^+ 74
Atomic and Molecular Beam Research 75

IX. ENGINEERING AND TECHNOLOGICAL DEVELOPMENT

Ultrahigh-Vacuum Development 76
Liquid Helium Experiment 83
Mechanical Engineering Development 85
Electrical Engineering Development 97

TALKS AND PUBLICATIONS 101

CONTROLLED THERMONUCLEAR RESEARCH

QUARTERLY REPORT

March, April, May 1959

Lawrence Radiation Laboratory
University of California
Berkeley and Livermore, California

June 10, 1959

GENERAL INTRODUCTION

C. M. Van Atta

In this quarterly report components of the program not specifically covered in the preceding report (e. g., the Beta-Ray Experiment and the Ion Magnetron) are brought up to date. No effort is made to report the program uniformly: elements of the program in which no significant results have been produced since the previous report have been mentioned only briefly.

The continued high level of interest in plasma physics and controlled thermonuclear research is indicated by (a) applications by graduate students at Berkeley to undertake Ph. D. thesis research in plasma physics, (b) frequent visits to Livermore and Berkeley by scientists from many countries interested in reviewing the controlled thermonuclear program as a basis for deciding upon the character of plasma research projects to be undertaken, and (c) invitations to engineers and physicists involved in the controlled thermonuclear research at Lawrence Radiation Laboratory to speak at the meetings and conventions of technical societies. As in the preceding quarterly report, a list of recent talks and publications by the Sherwood Group appears at the end of this report.

The activities of the past quarter are reported under the following headings:

I. Pyrotron (Magnetic Mirror) Program
II. High-Energy Injection
III. Astron Program
IV. Livermore Pinch Program
V. Berkeley Pinch Program
VI. Ion Magnetron
VII. Theoretical Research
VIII. Basic Experimental Research
IX. Engineering and Technological Development

The approximate costs for the major components of the program and the direct heads assigned to the program during February, March, and April are given in the following tables. Note that these figures lag technical reporting by one month because of the time required to complete the accounting procedures.

Operating costs (thousands of dollars)

	Magnetic mirror	Astron	Pinch B + L	Other & general	Totals
February 1959	203	82	105	97	487
March 1959	213	65	137	129	544
April 1959	233	101	140	129	603

Approximate direct heads

	Livermore	Berkeley	Totals
February 1959	248	44	292
March 1959	269	56	325
April 1959	261	53	314

Note that the direct effort is expressed in "direct heads" instead of in man-months as in the previous report. The direct heads amounts essentially to the average number of persons assigned to the program during the month. The direct effort is equal to the direct heads minus the vacation and sick leave for the month. The assigned direct heads is rapidly approaching the average allocation of 266 heads at Livermore and 66 at Berkeley budgeted for FY 60.

I. PYROTRON (MAGNETIC MIRROR) PROGRAM

INTRODUCTION AND SUMMARY

Richard F. Post

The efforts of this quarter were concerned primarily with preparatory experimental work and the design of new experiments, based on the programmatic objectives outlined in the preceding quarterly report.

Some of the significant isolated results obtained during the period (reported in greater detail in the following sections) were:

1. The apparent achievement of acceptably large fractions of trapped ions with substantial rotational energies in the plasma-injection experiments by Coensgen et al.

2. Observations on the radial dependence of energetic electron-diffusion flux densities in the high-compression experiments by Ellis.

3. The generation, propagation, and detection of what appear to be compressional Alfvén waves along the P^4 plasma (R. F. Post).

4. The use of P^4 to produce a large number of previously untabulated vacuum ultraviolet spectrum lines of the refractory metals (R. Kelly).

Preparatory work for the ALICE (Adiabatic Low-Energy Injection and Capture Experiment) fast-atom-injection experiment continued. The theory of energy transfer between fast ions and low-energy electrons is being re-examined in the light of the possibility that in some cases a distortion of the electron energy distribution may play a role in reducing the loss of energy from the ions to less than the usual calculated rate, which assumes a Maxwellian distribution.

MAGNETIC HIGH-COMPRESSION EXPERIMENTS

Frederic H. Coensgen in charge

Plasma-Injection Studies

Briefly, the method for studying the angular distribution is based upon the adiabatic condition for the ion reflection, i.e., $\sin\theta = R^{-1/2}$. The vacuum chamber is about 20 ft long and 18 in. in internal diameter. This chamber is provided with a uniform field and a mirror coil at the center. At the time of the preceding report a Felix-type high-energy ion source had been installed in the chamber for the purpose of checking the adiabaticity at the mirror and in the coupling region between the uniform field and the ion analyzer for ions that have large orbits. After considerable work a helical beam of 3-kev ions was obtained through the use of large baffles external to the ion source. From the distance between the nodes of the axis (as measured by a small probe) and the values of the magnetic field the angle θ of the ions was found to be 55°, which agreed with the value calculated from the baffle geometry. The orbit diameter was determined to be 4.88 in. In the plasma experiments orbits of interest do not exceed this value. The value of the mirror field necessary for ion reflection was determined by measuring both the transmitted and reflected ion beams. The value of θ thus determined was within a few per cent of the above value. By measurement of the reflected ion beam the reflection coefficient was found to be greater than 96%. Thus the ions in large orbits appear to behave adiabatically at the mirror.

It was found that the ion current was not large enough to allow investigation of the ion behavior from the uniform field to the analyzer.

At this time the ion source was removed and plasma sources installed behind the same baffle system. There was the possibility that enough ions of the plasma would have such values of θ as to pass through the baffle to form an adequate ion current for studying the above problem. A large Faraday cup was constructed and put into the uniform field behind the magnetic mirror. Since that time (about April 8) this cup has been the principal detector and with suitable limiting baffles has proved to be a quite satisfactory ion detector. By varying the mirror, it was found that about half the ions have values of θ greater than 20°. However, the baffle should have limited the angular distribution to a band centered about 55°, rather than the observed monotonically decreasing distribution limited to values of θ less than 30°.

As a suitable ion beam could not be selected from the plasma, an injection study has been under way using the mirror and the Faraday cup. If a plasma can be injected in which the value of θ is large for an appreciable fraction of the ions, this plasma can be used to study the analyzer coupling. The present method has proved very useful for quickly surveying a large variety of injection schemes. Two very simple injection schemes have been found which may give a suitable initial plasma. In each of these schemes the plasma injectors are aligned with the uniform magnetic field. In the first (cusp geometry) the magnetic field at the injection point is reversed

from the main magnetic field. In the second scheme the plasma is simply injected along the field lines as previously done in the three-stage Toy Top experiment or the Table Top experiment. However, it is found that the fraction of ions with values of $\theta > 25^{\circ}$ increases as the value of the uniform field is increased. For a magnetic field of 700 gauss this fraction is about 30%. There are some indications that the ions with large θ values are light ions (D^{+} and H^{+}). It may be possible to baffle in such a way as to eliminate the low-θ components and perhaps discriminate against heavier ions.

Observations made by using circular discs 5.5 in. in diameter to exclude the plasma along the axis indicate that the plasma has a larger radial distribution than previously suspected. These observations are not in agreement with the size of the electron column observed by means of the microwave interferometer, if one assumes a rectangular radial distribution.

At present it appears quite probable that an initial plasma can be injected into a field of the order of 700 gauss in which 50% of the ions have rotational energies greater than 100 ev. For a compression of 100 these ions should be heated to 10 kev.

Plasma Source Studies

The dc test stand is being used primarily for a parametric study of the plasma sources, although some cross checking has been done of angular distributions with the analyzer on the dc stand against similar conditions in the Toy Top system using the Faraday cup detector. The effects of stack length, orifice diameter, supply capacity, magnetic field, and polarity have been studied. A detailed study of impurities is in progress and also a study of the electron energy distribution. The electron energies appear quite low, < 10 ev. The effect of voltage polarity has been investigated and the strong dependence of the high-energy component upon polarity reconfirmed. These results are very briefly summarized in an engineering note, UCRL-5603-T (4508-41 CVL-3).

Sometime during the next quarter a more detailed report will be written describing this device.

ELECTRON-DISTRIBUTION ANALYSIS

Robert E. Ellis

Electron Energy-Distribution Probes

A four-channel scintillator probe has been extensively tested in Table Top. The results indicate that such a probe will operate satisfactorily to provide information on the electron energy distribution. To date, the probe has been operated at various distances from the plane of the east mirror, both on and off the magnetic axis. With no absorbers, a radial distribution of the flux of electron energy has been taken at a position 8-1/2 in. from the mirror plane. The preliminary results indicate that the diameter of the beam (at half maximum) is ~ 1-1/2 in. and is quite uniform over a diameter of ~ 1-1/4 in. The circle of centers of the four probe channels is 1-1/8 in. in diameter. With the twelve-position foil wheel it should be possible to obtain an energy distribution in about one-third the time required for a single-channel probe with a zero-absorber check point for each machine pulse.

Within about a month a set of photomultiplier bases with a higher saturation level should be available. When these items, along with some very thin aluminum foils being provided by Hugh Smith, become available it should be possible to obtain a large amount of data on electron energies. It is hoped that by that time the machine code for analysis of the data will have also been perfected.

50-kev Electron Beam (Fluor Calibration)

Parts for the accelerator have been received, with the exception of a defective part for the gun which has to be remade. David Edson is still working on the deflection circuit. An integrating electrometer for accurate beam-current measurements has been ordered.

Vacuum Development

Joseph C. Behne has completed some designs for the components for a 10-inch high-speed oil diffusion pump system. In view of the recent announcement of improved speeds of commercial oil diffusion pumps, the design may have to be altered somewhat to take full advantage of the higher speeds available.

RCA has submitted tentative drawings for a metal-ceramic vacuum system similar in shape to but somewhat larger in diameter than the present Table Top glass system. It seems to be their opinion, as expressed to Thomas H. Batzer, that they could furnish such a system with their present techniques for glass-bonding of ceramic parts and making ram-sealed inconel flanges for the removable vacuum seals required. Such a system could be baked out.

Ion-Analyzer Experiments

H. Bandel of the Sylvania Microwave Laboratory is at present set up in the Table Top area, where he is testing his ion-energy analyzer with a TiD spark source preliminary to running on the Table Top machine.

E. Bailey of Stanford Research Institute has submitted a report on the work he did with his ion analyzer, which was concluded May 1. There are no plans at present for continued development or use of this type of ion-energy analyzer.

ADIABATIC LOW-ENERGY INJECTION AND CAPTURE EXPERIMENT (ALICE)

Charles C. Damm in charge

Theoretical Considerations

Archer H. Futch and Charles C. Damm

Previous formulations of the buildup equations for neutral-atom injection have not included the effects of finite orbit size. Physical arguments indicate that inclusion of these effects alter the critical build-up conditions. This occurs because the rate of change of ion density at any radius r is dependent upon the ion-density distribution within a distance of an orbit diameter.

Using a two-dimensional model for the buildup, and assuming uniform precession of orbits about the magnetic axis, one obtains the differential equation

$$\frac{d\rho(r)}{dt} = \sigma_t{}^n N_0(r) + \frac{\sigma_t{}^i v}{v_0} N_i(r) - \rho_0(\sigma_c{}^n v_1)\rho(r) - \sigma_s{}^i v_2 \rho^2(r).$$

The notation used is that of Gibson et al. (UCRL-5047), with the additions

$$N_i(r) = \int_{r-2a}^{r+2a} \int_{\theta_1}^{\theta_2} \frac{2J_0(r_0, \theta)\rho(r_0) r_0 \, dr_0 \, d\theta}{\pi^2 \, 4r^2(r_0{}^2 + a^2 - 2r_0 a \cos\theta) - r_0{}^2 - 2r_0 a \cos\theta + r^2)^2 \; {}^{1/2}},$$

where

a = orbit radius,

(r_0, θ) = coordinates of the point of origin of the ion,

and $J_0(r_0, \theta)$ = flux of the incident neutral atom beam.

The limits on the θ integration depend on r_0, a, and r. A similar expression for $N_0(r)$ is obtained by replacing $\rho(r_0)$ by ρ_0 in the expression for $N_i(r)$.

Since it is not possible to obtain an analytic solution of this equation, the Theoretical Section has been consulted concerning numerical solution.

A considerably simpler equation results if the incident flux is assumed to be independent of θ. In this case the θ integration is easily performed, and numerical solutions may be obtained at an earlier date. Although this situation does not correspond to the present experimental arrangement, the equations do include the effect of finite orbit size and should give some insight into the buildup process.

We wish to acknowledge the help of Warren Heckrotte in deriving the expression for $N_i(r)$.

Grid Source Development

Frank J. Gordon and James F. Steinhaus

The first run on the source was made March 18 and there have been 17 more runs, all using hydrogen gas and a single long exit slit. Total hydrogen beam has increased from 32 ma. to more than 500 ma. Developments associated with bringing about this increase are listed below:

1. The electron-drain system has been revised to eliminate glow and overheating.

2. A floating carbon electrode has been added between the filament and defining slot. This reduces filament wear and eliminates arcing to the defining slot.

3. The filament-chamber cover plate has been made integral with the exit-slit carbon to minimize gas leaks.

4. Gas is introduced independently into the filament chamber and into the arc chamber.

5. The accelerating electrode has been modified to minimize high pressure and sparking in the accelerating gap and to minimize distortion due to heating of the accelerating electrode holder. Water cooling has been added for dimensional stability.

6. Power supplies have been protected from high-voltage rf surges in primary power lines which result from sparking in the ion source.

A water-cooled movable target was designed for beam profile studies. A single preliminary measurement indicates that at present approximately 60% of the hydrogen beam is H_1^+ and about 80% of the H_1^+ beam lies within an angle of ± 6 degrees from the normal to the source.

Equipment has been readied to explore the possible gas-efficiency advantage in using a mixture of He and H. This has not yet been definitely determined.

A titanium evaporating pump containing a large resistance-heated tungsten filament wrapped with titanium was added to the vacuum system to assist the two 16-inch diffusion pumps. The titanium pump has doubled the total pumping speed of the system.

Hydrogen beam output is now approximately 1.7 amperes per square inch, or less by a factor of about two than ultimate expectations.

Beam Neutralization

Charles C. Damm and Archer H. Futch

Gas-Cell Neutralizer

A gas-cell neutralizer has been designed and released for fabrication. The pressure distribution on the output side has been optimized for minimum gas flow along the beam axis on the basis of a molecule-molecule scattering cross section of 7.6×10^{-15} cm^2. The over-all length is 200 cm and the beam size (maximum) is 4×10 cm. The average pressure at the output end will be 5×10^{-5} mm Hg, with a peak pressure at the center of the gas cell of about 1 micron.

Hydrogen Jet Experiment

One approach to a beam neutralizer is a hydrogen-gas target in the form of a supersonic jet perpendicular to the ion beam. A preliminary experiment has been designed to determine the pumping speed required to form a hydrogen target of sufficient density to produce 90% neutralization. The experimental apparatus is being assembled and should be complete within two weeks.

Moving-Vane Deflector

It has been suggested (R. F. Post) that a plane blade oriented parallel to the beam axis and moving perpendicular to the beam at an appropriate speed could greatly reduce the flux of gas molecules directed along the beam tube by intercepting almost all of these during their passage along the length of the moving blade. With diffuse reflection from the blade, normal differential pumping considerations then apply. The much-higher-speed beam particles would be attenuated essentially only by the geometric shadow of the vane, with a loss of ~ 1%.

The blade must move at an appreciable fraction of the molecular velocity, depending on the ratio of blade length to blade spacing chosen, so that, for reasonable lengths, very high speeds are involved.

Refinement and optimization of these considerations is under way, preliminary to mechanical design. A successful moving-vane deflector should reduce the effective plasma-chamber pressure, and possibly also reduce the over-all length of the beam tube.

Vacuum and Surface Studies

Angus L. Hunt and Earl C. Popp

The activity reported under this heading includes the studies of gettering and getter pump development, mass-spectrometer studies in high vacuum, and the interaction of surfaces with energetic ions and atoms.

Getters and Getter Pump Development

At this time it seems reasonable to assume that the adsorption of gas by a large, initially clean surface is the mechanism by which evaporated deposits of some metals getter hydrogen. The speed of a pump utilizing such a metallic getter can then be assumed to be critically dependent on the rate of formation of clean surface. A high rate for formation of clean surface should be associated with a high pumping speed, if other important factors such as substrate structure, sticking probability, and gas composition remain invariant.

Because the acquisition of high-speed pumps is of immediate concern, we are extending the investigation of the gettering ability of evaporated molybdenum deposits. Confirmation of previous work on the vaporization of molybdenum by the electron-bombardment technique has been delayed. The associated vacuum system presents, in prototype form, almost all the problems requiring solution before large ultra-high-vacuum systems can be considered reliable. In addition, we have undertaken a series of experiments on techniques for vaporization of molybdenum from resistively heated molybdenum filament wires. It is expected that development of the filament technique will result in a reliable and convenient method for deposition of molybdenum which can be extended to larger systems by multiplication of the number of filaments. Present results, obtained in a system which could not be baked, indicate that at least 10 g of molybdenum can be deposited from a convenient geometry in a 30-minute period. A completely bakeable pump is now under construction in which the base pressure during deposition and immediately after deposition can be reliably evaluated.

We are also preparing to evaluate commercial barium getters with respect to their utility as simple high-speed pumps for hydrogen at pressures on the order of 10^{-5} mm Hg.

The Bakeoutable Mass Spectrometer

In anticipation of experiments on the interaction of surfaces with energetic ions and atoms, and because of the present necessity for obtaining information on the operational mechanism of getter pumps and getters in general, a high-vacuum mass spectrometer which can be baked out is under construction with the cooperation and advice of the Westinghouse Research Laboratory. This mass spectrometer is not yet in reliable operation.

Surface-Bombardment Studies

Experiments on the interaction of surfaces with energetic ions and atoms are under consideration. Progress in these studies depends upon development of ion-atom sources as well as of pumps.

The small Von Ardenne proton source has been mounted on a CEC evapor-ion pump. An electrostatic lens system has been installed, with partially successful results. Approximately 300 μa of protons at 12 kev energy have been focused through a tube 2.85 cm i. d. by 100 cm long. An immediate objective is to raise this beam intensity to 1 ma or more by improvement in extraction and lens geometry.

P^4 PROGRESS REPORT

Andrew L. Gardner, Laurence S. Hall, and Norman L. Oleson

The effort has continued to be devoted primarily to measurements of the characteristics of the steady-state plasma column of the P^4 system. A technical report on the P^4 device is being prepared although some of the desired measurements have yet to be taken.

Techniques are evolving which make for more reliable and repeatable operation of the system. Experience indicates at least 60 hours or so of running time may be expected before deterioration of the PIG cathode necessitates its replacement.

Spectroscopic Measurements

With only He being deliberately introduced into the system nearly all the lines in the visible region have been identified as coming from He (I and II), C(II, III, IV), N(II, III, IV) and O(I, II, III, IV). No metallic lines have been observed in this condition.

Various other spectroscopic measurements are under way. The P^4 plasma column has proved to be a convenient medium for vaporizing the refractory metals and exciting their spectra in the vacuum ultraviolet region (R. L. Kelly).

Probe Studies

Preliminary measurements have been made with a heated electric probe which can be held at a constant temperature by varying the ohmic heating current as the outer regions of the plasma column are explored.

Various other types of probes and probe measurements are being considered, including the use of a water-cooled probe to permit deeper penetration into the beam. The objective of the probe measurements is to learn as much as possible about the variation of the space potential, electron temperature, and density with radius.

Microwave Measurements

Equipment has just been installed by the microwave group for measurements of noise radiated by the plasma in the vicinity of the electron cyclotron frequency (~ 2.8 kMc). The superheterodyne receiver sweeps over a region of about one kMc.

Installation of equipment for electron-density measurements using 4-mm microwaves will soon be completed.

Propagation of Hydromagnetic Waves along the Plasma Column

Some preliminary investigations of the generation and propagation of plasma disturbances have been made by Richard F. Post with encouraging results. A pulsed current through a coil surrounding the plasma column produces a delayed response in a similar coil located about a meter further along the column. The time delay is of the right order for propagation of a plasma wave. On this basis circuitry has been built for further tests.

Interaction of the Plasma with an Electron Beam

The electron beam equipment will be ready for installation within a few weeks. Generation of electrical oscillations by injecting the electron beam axially through the plasma column from one end will be investigated.

II. HIGH-ENERGY INJECTION

CALCULATION OF PLASMA BUILDUP FROM HIGH-ENERGY INJECTION

F. Charles Gilbert, Warren Heckrotte, Ross E. Hester, John Killeen, and Sheldon M. Shanack

A study of high-energy molecular-ion injection into mirror machines has been carried on with particular emphasis upon the conditions that control the buildup of the plasma. The systems considered have been similar to the ORNL-DCX device or the Russian Ogra machine. There are two schemes that seem attractive. One involves the use of a PIG-type discharge whose density is on the order of 10^{12} ions/cm^3, and the other uses a carbon arc whose density is on the order of 10^{14} ions/cm^3. In both methods the beam is inflected at an angle to the axis of the machine, so that the beam passes repeatedly through an axially centered arc. The beam is injected at a sufficiently large angle to miss the inflector on the first turn, and the beam orbit must precess sufficiently to miss the inflector after the first round trip of the machine. Under these conditions most of the beam will be dissociated before it precesses enough to strike the inflector. The carbon arc permits a shorter machine with a faster buildup, but the high electron density in the carbon arc constitutes a mechanism of serious plasma energy loss.

The equations governing the density n of hot ions and the density n_0 cold neutral atoms are

$$\frac{dn}{dt} = \frac{\alpha I}{V_1} - n\, n_0\, \sigma_{cx}\, v - n^2 m, \tag{1}$$

$$- S n_0 - V_1 [k\sigma_i - (1-k)\sigma_{cx}] n n_0 v$$

$$V \frac{dn_0}{dt} = \beta I + i - S\, n_0\, V_1 [k\sigma_i - (1-k)\sigma_{cx}]\, v + n^2 (1-k)\, m\, V_1. \tag{2}$$

These coupled equations have been solved in an IBM 650 for many sets of parameters. The results of two of these computations are shown in Fig. 1. Case A (Fig. 1a) assumes a PIG discharge and case B (Fig. 1b) is for a carbon arc. The parameters pertinent to these two cases are given in Table I.

It is assumed in Eq. (2) that all energetic neutrals reflect from the walls as thermal H^0 atoms. This assumption is conservative because a large fraction of the energetic neutrals may become buried in a well-baked-out vacuum wall. The slow ions that are produced by ionization and charge exchange will rapidly scatter out through the mirror. They will eventually be neutralized and a fraction k will be removed by vacuum pumps and a fraction $1-k$ will return to the reactor region as neutrals. It would be hoped that k could be improved by providing long magnetic conductances at each

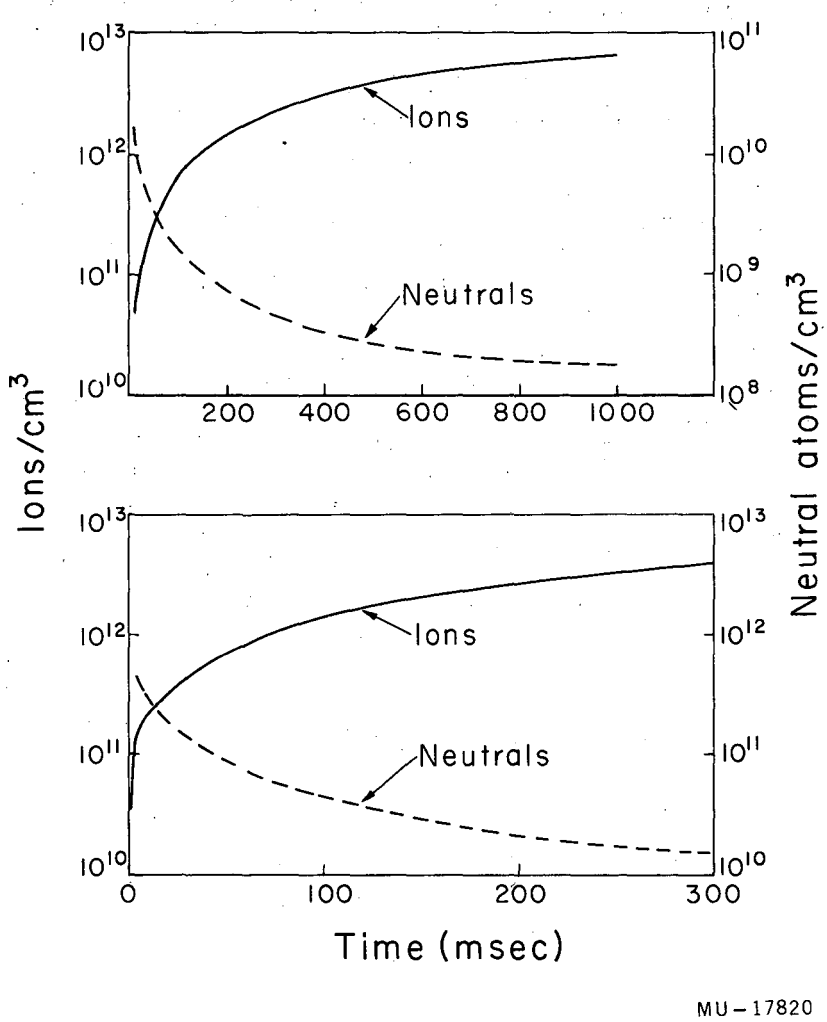

Fig. 1. Results of computations of density n of hot ions and density n_0 of cold neutral atoms.

Table I

Parameters for buildup equations – Eqs. (1) and (2)

Parameters		Units	Case A	Case B
E	Ion energy	kev	200 (H_2^+)	200 (H_2^+)
H	Magnetic field	oersteds	9000	9000
n	Ion density	ions/cm^3	variable	variable
n_0	Neutral density	atoms/cm^3	variable initially 4×10^{10}	variable initially 2×10^{10}
I	Molecular ion current	ma	300	300
V_1	Plasma volume	liters	133	30
V	Reaction-chamber volume	liters	1500	141
S	Pumping speed	liters/sec	20,000	1000
i	Leak of cold gas into system	atoms/sec	4×10^{17}	2×10^{17}
σ_i	Ionization cross section	cm^2	6×10^{-17}	6×10^{-17}
σ_{cx}	Charge-exchange cross section	cm^2	2×10^{-17}	2×10^{-17}
m	Mirror loss coefficient	cm^3/sec	4×10^{-15}	2.7×10^{-15}
v	Ion velocity	cm/sec	4.4×10^8	4.4×10^8
k	Efficiency factor for eliminating cold ions	...	0.6	0.5
α	Fraction of H^+ formed per H_2^+	...	1.3	1.3
β	Fraction of H^0 formed per H_2^+	...	0.7	0.7

end of the machine, terminating in a well-pumped vacuum chamber. Equations (1) and (2) yield the condition

$$k > \left(1 + \frac{\beta + \frac{i}{I} - \frac{Sn_0}{I}}{a}\right) \frac{\sigma_{cx}}{\sigma_i + \sigma_{cx}}$$

if burnout is to occur. For both cases A and B, here presented, k must be greater than about 0.4. It is noted that the ion densities will approach the order of 10^{12} in about 0.1 second and 10^{13} in a few seconds. The plasma β equals $(nkt/(B^2/2\mu_0))$ for a density of 10^{12}, and at a temperature of 100 kev would be about 5%.

It is essential that a cold ion leave the reaction chamber before recombining with an electron. The radiative combination rate is very small. However, a large fraction of the cold ions may be H_2^+, which can undergo dissociative recombination $H_2^+ + e \rightarrow H^0 + H^0$ at a rapid rate. This reaction will compete with second ionization $H_2^+ + (\text{ion}) \rightarrow H^+ + H^+ + e + (\text{ion})$ or with molecular breakup $H_2^+ + (\text{ion}) \rightarrow H^+ + H^0 + (\text{ion})$. The resulting H^0's from the above three reactions will be further ionized and then cannot recombine via dissociative recombination.

A preliminary examination of the rate of energy loss to the arc electrons indicates that the time required for the ion energy to decrease by a factor of 10 is comparable to the buildup times. This may not be a serious complication if the plasma density builds up to a point at which the arc may be turned off. In order to investigate the energy dependence of the plasma behavior, the equations are being modified to yield both the time dependence and energy dependence of the ion density.

Studies using similar equations are being made of high-energy neutral injection schemes, and more complex equations are being developed to handle more detailed effects.

Beam Inflector

In order to inflect the molecular ion beam into the spiral orbits described, it is necessary to have an inflector which (a) negates the magnetic field over a distance the order of a meter, (b) is physically small so as to increase the path length of the molecular ions in the machine, and (c) does not introduce a serious perturbation in the magnetic field.

Three types of inflector were considered: (a) $E \times H$, (b) μ metal, and (c) an electromagnetic inflector suggested by Nicholas Christofilos which makes use of two cylindrical current configurations, one to counteract the external field and a second to eliminate the fringe field of the first. The $E \times H$ inflector requires an electric field of 4.5×10^6 volts/meter for $B = 1$ weber/meter^2(10^4 gauss). Such fields are difficult to maintain. The μ-metal shield will work but will cause serious perturbations in the external field. The electromagnetic inflector requires very high currents ($\sim 10^5$ amperes) to nullify a 10,000-gauss field. The method chosen is a combination

of (b) and (c). A μ-metal shield is used to provide a field-free region, and external windings are used to eliminate the perturbations back on the external field.

An inflector 1 meter long with a 2-inch aperture would have the following characteristics:

(1) Outside diameter, 4 inches.

(2) Power supply, 12,000 amperes at 10 volts.

(3) Coolant, water, 2 liters per second.

(4) Temperature rise, 15° C.

(5) μ-metal Permendure gives $\mu > 5000$ for B between 5000 and 17,000 gauss.

The magnetic field inside the inflector would be 13 gauss for an external field of 10,000 gauss.

BETA-RAY EXPERIMENT

Gordon Gibson, Willard C. Jordan, and Eugene J. Lauer

The equations of motion for a charged particle in an ideal cylindrically symmetric mirror machine have not been solved analytically. Interesting and informative but limited theoretical results are obtained from numerical analysis, Störmer-type calculations, and approximate solutions (e.g., adiabatic theory); however, it is of practical importance to know if the "vacuum" containment times of particles in mirror machines under various conditions can be very long, corresponding to path lengths of the order 10^{10} to 10^{11} cm. The β^{+}-ray experiment was designed to yield this information. Every effort was made to provide as ideal a mirror machine as possible, with provisions for introducing asymmetric fields if desired.

In this experiment a lower limit on the single-particle containment times of energetic positrons (~ 1 Mev) are observed directly. From the containment time of a positron the containment time of an ion may be predicted, since charged particles starting out in the same direction in a given magnetic field configuration and having the same Larmor radius follow the same path if radiation effects are negligible. The positrons, because of their smaller mass, traverse this path more rapidly and hence radiate more. This effect has been analyzed[1] and is small for the cases presented in this report.

[1] Gordon Gibson and Eugene J. Lauer, Radiation Damping of an Electron in a Uniform Magnetic Field, UCRL-4942, July 1957.

The experimental setup is shown in Fig. 2. Nonmagnetic materials are used except for the magnetic shielding for the counter, which is about 4 ft from the nearest mirror coil. The energy scale of the counter was established and the energy resolution measured by comparison with the magnetic beta-ray spectrograph in the chemistry department. The experiment is carried out as follows:

1. The 90 inch cyclotron beam of protons (~ 13 Mev) is incident on a bombardment pot containing magnesium fluoride powder. A p-n reaction on the fluorine produces radioactive Ne^{19}. The Ne^{19} diffuses through a 2-in. diameter 70-ft-long pipeline, which runs through the cyclotron shielding wall, into the 20-in. -diameter vacuum system of the mirror machine. The fast valve is closed during this time. The Ne^{19} decays with an 18-sec half life and yields positrons with an end-point energy of 2.2 Mev. The Ne^{19} provides an isotropic uniform-volume source. Those positrons which are born in one loss cone make a transit through the machine and impinge on the fast valve. Those born in the other loss cone are incident on the opposite wall of the vacuum chamber, except for those which pass through a thin window and are detected in the scintillation crystal of the counter. The remaining positrons are trapped between the mirrors. If these trapped particles behave adiabatically they make many transits until their velocity vectors enter the loss cone because of multiple Coulomb scattering on the background gas. If the particles behave nonadiabatically they may escape in a much shorter time. During this initial stage, when the Ne^{19} is flowing into the mirror machine, there can be no diffusion pump on the system, otherwise the source of the positrons would be removed, yet the pressure of the background gas must be kept low to maximize the scattering-out time of the positrons. A combination of a liquid-N_2-cooled charcoal getter pump and a liquid-N_2-cooled Ti evaporation pump maintains a pressure on the order of 0.5×10^{-7} mm Hg of unknown gas without pumping on the inert Ne^{19} gas. A stable inert gas may be added to serve as the scattering gas. The partial pressure of the Ne^{19} is approximately 10^{-13} mm Hg.

2. The next step is to close a valve which prevents any Ne^{19} from entering the system and then to open the fast valve. The valve opens in 0.04 sec and the source of the positrons (Ne^{19}) is pumped out by the nonmagnetic 32-in. -diffusion pump with an e-folding time of 1/4 sec. (This time is measured by observing the counting rate as a function of time with the magnetic field turned off.) The magnetic field acts as a strainer and contains the trapped particles until they escape and some of them are detected by the counter. The containment times are measured directly by observing the escaping positrons. Figure 3 gives an example of the observed counting rate as a function of time. Before the fast valve is fired there is a nearly constant counting rate corresponding to a steady-state condition in which just as many particles are being trapped as are escaping. Then when the fast valve is opened the counting rate drops suddenly (1/4 sec) because of the removal of the source which continually emits particles into the loss cone. After the Ne^{19} has been pumped out the counting rate decreases slowly with the characteristic containment time. The times that have been measured in this way are found to be consistent with theoretical calculations for the scattering-out time. The fraction of the particles which behave adiabatically

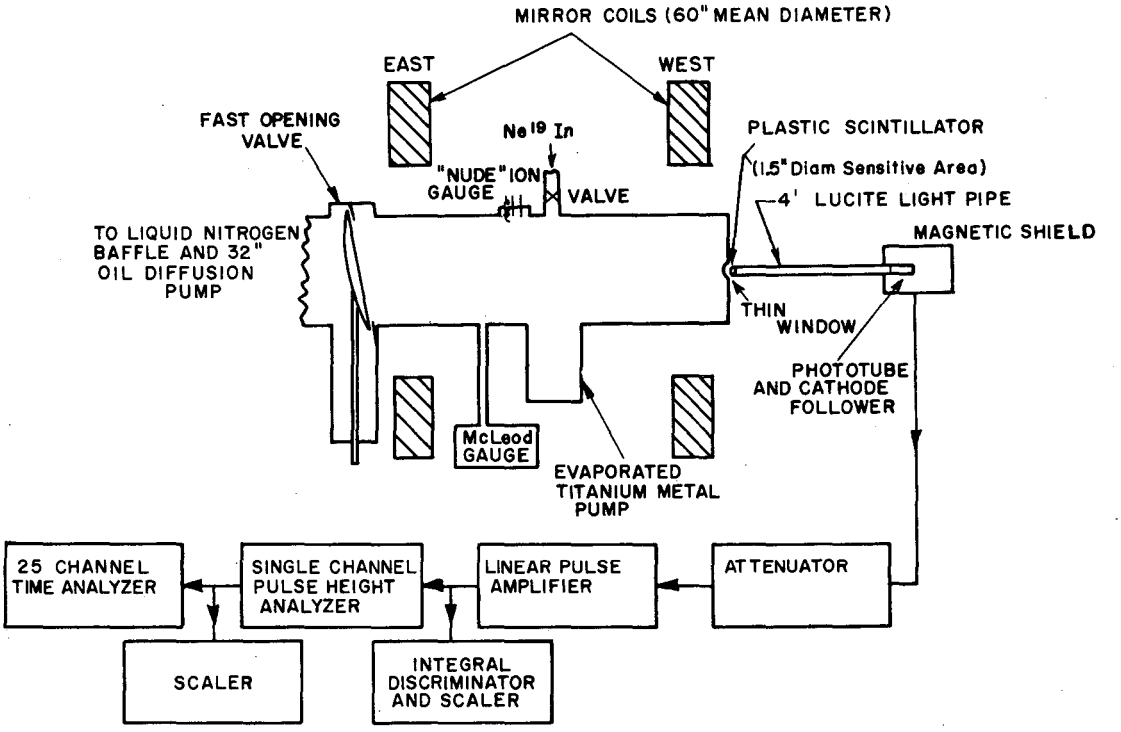

MU-17884

Fig. 2. Apparatus for the fast-emptying experiment.

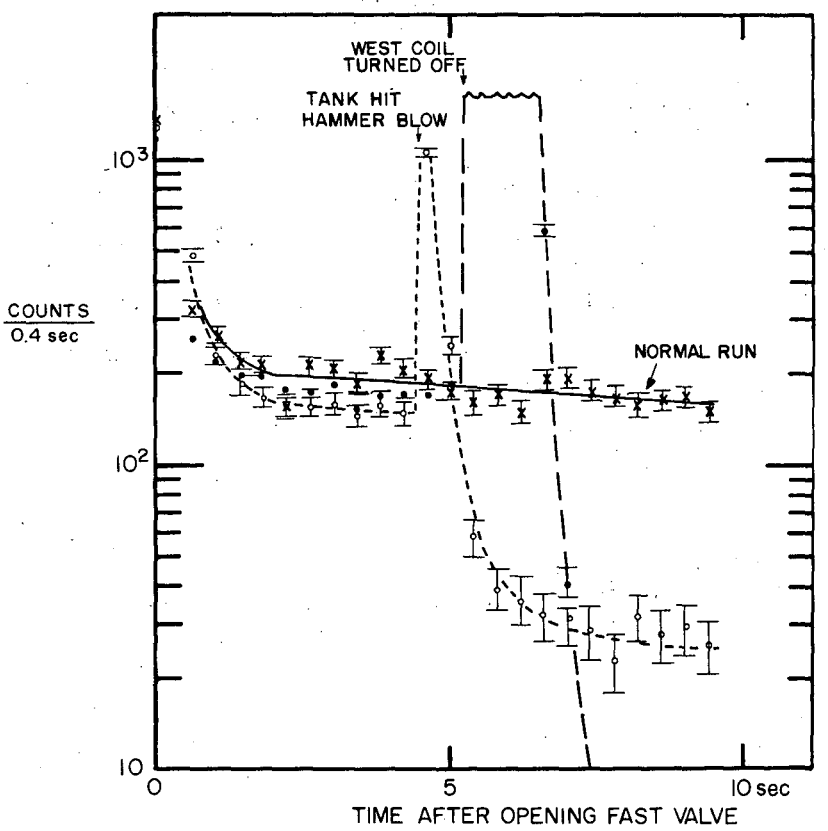

MU-17886

Fig. 3. Counting rate (observed) as a function of time in fast-emptying runs. Counter on axis, single-channel analyzer set for 0.5±.05 Mev; counter energy resolution (half width at half-maximum amplitude) = 19%; base vacuum 1230-gauss central field, bias = + 3.5%, mirror ratio = 1.8.

may be obtained by projecting the linear part of the curve on the semilog paper back to the time of firing the valve and comparing the counting rate corresponding to this intercept with the actual counting rate at this time.

A complementary set of data is given by the steady-state mirror bias curve. These data are obtained by keeping the fast valve closed and observing the steady-state counting rate as a function of the bias of the mirror coils. (A + 5 % bias means that the coil nearest the counter has a current through it that is 2.5% lower than for the symmetric machine whereas for the other coil it is 2.5% higher.)

With a negative bias no trapped particles are observed except those which escape as a result of a sudden large-angle change of their velocity vector. With a positive bias one observes an additional component due to the leakage of trapped particles which have suffered small-angle changes in their velocity vectors due to scattering or other effects. Hence, although the bias curves do not give the containment time, they do give the fraction F of the particles that are initially trapped and come out the end of the machine. By comparing this result with the trapped fraction obtained from the "fast-emptying" experiment one may conclude whether or not particles are lost by nonadiabatic effects.

Another version of the experiment was carried out first. This was the "fast-filling" experiment. In this experiment the 32-in. diffusion pump was replaced by an auxiliary tank which was a 2.5 ft extension of the main vacuum tank, and the Ne^{19} was fed into this tank with the fast valve closed. The valve in the pipeline was then closed in order to isolate a fixed quantity of gas and the fast valve was opened. The Ne^{19} diffused into the containment region with an e-folding time of 0.05 sec. The counting rate observed as a function of time is shown in Fig. 4. With a negative bias the counting rate rose sharply as the radioactive Ne diffused in. On positive bias, in addition to this prompt counting rate, a longer transient buildup was observed until a steady state was reached in which just as many particles were being trapped as were escaping.

Normalization of the data was carried out by turning off the field and measuring the counting rate at a fixed time after opening the fast valve.

The containment times and trapped fractions may be obtained as functions of the magnetic field strength, positron energy, scattering gas, counter position, field inhomogeneity, etc. Theoretical calculations pertinent to this experiment have been carried out and are mentioned throughout the text.

Fast-Emptying Results

A practical difficulty occurs in obtaining the trapped fraction. Apparently dust particles passing through the containment region cause the trapped positrons to scatter out ("dust dumping"). Occasionally some of the trapped positrons are dumped in the first 1/2 second after the valve is fired, as evidenced by an abnormally high number of counts recorded in one or two

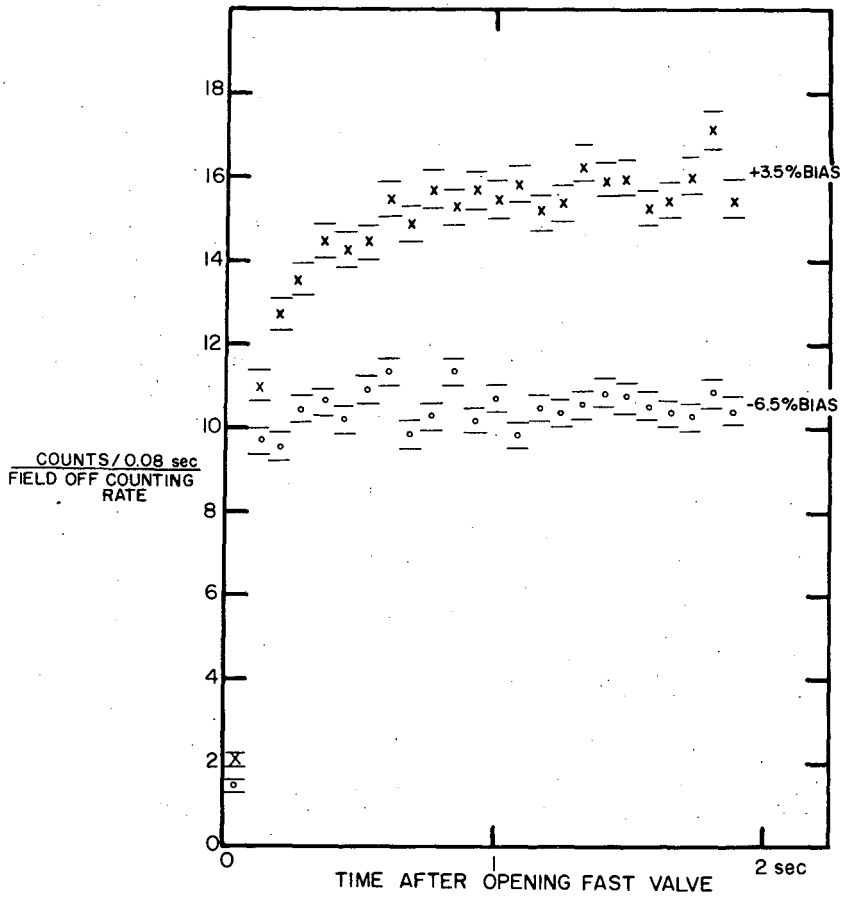

MU-17887

Fig. 4. Counting rate (observed) as a function of time for fast-filling runs. Counter on axis, single-channel analyzer set for 0.5 ± .05 Mev, counter energy resolution (half width at half-maximum amplitude) = 19%; 7×10^{-6} mm Hg stable neon, 1220-gauss central field, mirror ratio = 1.8.

channels on the analyzer. Those particles remaining then scatter out with the usual long containment time. The effect can be dramatically demonstrated by deliberately jarring the system during a run. This is shown in Fig. 3, where a normal run is compared with one in which the vacuum tank was struck a blow with a hammer during the course of the run. It is seen that the counting rate rose sharply immediately after the blow and then dropped to a low value. A case in which the coil nearest the counter was turned off is also shown. The effect here is the same as a nonadiabatic effect in our method of measuring the trapped fraction. However, the results for this case are not reproducible. The values for F given in Table II are the maximum values obtained for three different runs when "dust dumping" (see below) did not occur. F_E is the value of F when theoretical corrections are made for normalizing the energy spectrum of the positrons. That is, the trapped particles degrade in energy during their containment times and hence come from a different part of the spectrum than the particles that emerge promptly with the same energy.

The measured values of F_E given in Table II may be compared with a theoretical value of 0.45 (for a bias of +3.5%), which has been estimated by numerically adding the contributions from different axial source positions in the machine, assuming adiabatic behavior of all the trapped particles. The measurements should be regarded as preliminary, and more accurate results may be obtained. However, they do indicate that for the smallest orbit diameter in Table II, most of the trapped particles behave adiabatically (i.e., are lost only due to gas scattering) for e-folding times of about 6 seconds, whereas with increasing orbit diameter an increasing fraction is lost early because of nonadiabatic effects.

A coil (4 in. mean diameter, 3.3 in. long) was placed in the median plane with its axis parallel to the machine axis and 15.4 inches from it. At the maximum current the perturbing coil contributed about 1 gauss to the field on the axis of the mirror machine and about 7 gauss at 7 in. (largest orbit diameter) off axis in the direction of the perturbing coil. In some cases the resulting net field at the center of the perturbing coil was zero, while in others it was equal but opposite to the unperturbed field. Turning on the "inhomogeneity" coil made no significant change in the trapped fractions or containment times given in Table II for the 1-Mev cases. This is of practical interest, since an inflector should produce comparable asymmetries.

Fast-Filling Measurements

Table III gives the time τ for an e-fold increase in trapped positron counting rate for four pressures of stable neon scattering gas. The counter was on axis; the single-channel analyzer was set for 0.5±.05 Mev; the counter energy resolution (half width at half-maximum amplitude) was 19%; the central field was 1220 gauss, and the mirror ratio was 1.8. The base vacuum was about 1×10^{-6} mm Hg of unknown gas. These times are in agreement with the predictions of scattering theory. However, greater accuracy is obtained in the fast-emptying experiment.

Table II

Fast-emptying experiment

Single-channel analyzer (Mev) (±10%)	Resolution (± %)	H (kilogauss) (kg)	Bias (%)	2ρ (in.)	Neon pressure (-6 × 10mm Hg)	τ (± 10%) (sec)	F	F_E (±20%)
					0.5	5.7	0.31	---
1	13	1.22	+3.5	3.06	1.0	3.0	0.31	---
					2.0	1.9	0.32	0.33
					0.5	4.2	0.15	---
1	13	0.538	+3.5	6.94	1.0	3.0	0.14	---
					2.0	1.5	0.20	0.21
					0.5	8.2	0.54	---
0.5	19	1.22	+3.5	1.88	1.0	4.7	0.54	0.43
					2.0	2.4	0.52	---
					0.5	6.8	0.29	0.21
0.5	19	0.538	+3.5	4.26	1.0	3.9	0.28	---
					2.0	2.1	0.23	---
1	13	1.22	+3.5	3.06	1.0	4.0	0.50	
					2.0	2.7	0.45	

Counter on axis, H = central field, mirror ratio = 1.8.
Stable neon added as scattering gas.
ρ is the Larmor radius in the central field, assuming $\bar{v} \cdot \bar{H} = 0$.
F = T/T+P, where T is the initial counting rate due to trapped particles that have an e-folding time τ, and P is the initial counting rate due to particles that escape promptly.

Table III

Fast-filling measurements

Stable neon pressure (mm Hg)	τ (sec)
2×10^{-4}	$\tau \leqslant 0.1$
2×10^{-5}	$0.3 \leqslant \tau \leqslant 0.5$
7×10^{-6}	$0.7 \leqslant \tau \leqslant 1.5$
Base vacuum	$2 \leqslant \tau$

Russian Experiment

Recently an experiment designed to measure the containment time of electrons in a mirror geometry has been performed in the U. S. S. R. The radioactive decay of tritium supplies electrons and the number of mirror reflections is calculated from a measurement of the ionization of the tritium in the chamber. It is not possible to compare the results of this experiment directly with those presented here, since the conditions of the two experiments are quite different. A much lower-energy particle and lower-z scattering gas are employed in the Russian experiment. Furthermore, the effects observed are presumably integrated over the entire energy spectrum of the tritium beta decay. However, the results of the two experiments seem to be qualitatively in agreement, with respect to containment times and in the fact that small asymmetries in the magnetic field do not result in a loss of particles.

New Containment Geometries (Plasma Fields Neglected)

Because of the end loss cones, the mean containment time of the mirror machine is limited to approximately τ_s, the time for small-angle scattering to cumulate to a large angle (say, 1 radian). Precession does not cause the particles in an axially symmetrical mirror machine to reach the wall because the precessional drift velocity has no average radial component.

The torus does not have an end loss, but in a uniformly wound torus without a rotational transform, the particles precess normal to the plane of the torus. Adding the rotational transform saves some of the particles, but those with a sufficiently small parallel component of velocity drift to the wall. Even if the particles were all injected with zero perpendicular component of velocity, the mean containment time would be limited to approximately τ_s, because in this time the distribution in angle of the velocity vectors would spread until an appreciable fraction of the particles would have entered the loss region of velocity space.

Some modifications of the torus are being investigated theoretically which may have no region of velocity space for which particles would reach the wall in the adiabatic approximation. In this case, the mean containment time, insofar as it is determined by scattering, would be approximately $N^2\tau_s$, the time to diffuse across field lines to the wall, where N is the distance to the wall measured in orbit radii. One of these geometries is the "bumpy torus," which is a uniformly spaced circular array of mirror-machine coils. In this case, precession around the line which is the analog of the axis of the axially symmetrical mirror machine may be sufficiently fast so that there is no net drift normal to the symmetry plane of the torus. Another geometry is a nearly uniformly wound torus with alternating straight and turning sections, with rotational transforms in the straight sections and a single field maximum in each turning section. Particles with a small parallel component of velocity may be prevented from spending a sufficiently long time in a turning section to drift to the wall.

ION-SOURCE DEVELOPMENT

John A. Fasolo

The Von Ardenne-type source, Model II, which was operated on a pulsed basis in the 10- to 20-kv range of extraction voltage in the Guppy II ion-source test facility, has been modified for operation in the 50- to 60-kv range of extraction voltage and is presently being operated in the 100-kv facility on a cw basis. The Model II geometry is shown in Fig. 5. The geometry of the modified source, Model III, is shown in Fig. 6.

During the first weeks of cw operation, filament breakage was an almost daily occurence. The procedure for putting a new filament into service has been modified and filament life is now adequate. The present procedure is to adjust the hydrogen flow to a value large enough to insure that a hydrogen arc can be struck and then to bring the filament up to operating temperature before arc voltage is applied to the source, thus minimizing bombardment of the filament by heavy ions which can damage the filament or impair its ability to emit electrons by chemically combining with the tungsten.

After a reasonable filament life had been achieved, it was found that operating time was limited by the rapid destruction of the tungsten anode insert as the result of bombardment by backstreaming electrons from the beam collector. A magnetic field was placed across the beam path to stop electrons drifting toward the accelerating gap, and damage to the insert is now negligible.

The major causes of unscheduled shutdowns have been eliminated, and the source operates reliably up to the highest value of arc current, 2 amperes, that the present arc power supply is capable of providing.

The beam is collected on a flat water-cooled copper plate 16 in. from the accelerating gap. A magnetic field parallel to the collector face prevents the escape of secondary electrons from the collector.

The best results obtained to date for cw operation are:

Extraction voltage	60 kv
Arc voltage	150 volts
Arc current	2.0 amp
Tank pressure	6×10^{-6} mm Hg
Beam current	20 ma

There is a sharply defined threshold value of gas flow below which an arc cannot be sustained. Arc and beam currents increase with gas flow over a limited range of flow rate and then decrease as the flow is further increased The threshold value of gas flow has varied for the various geometries tried to date, over a range corresponding to tank pressures ranging from 1.8×10^{-6} mm Hg to 2.0×10^{-5} mm Hg.

Arc current decreases monotonically with increasing magnetic field. For the present geometry the beam current goes through two maxima of approximately equal values as the magnetic current is varied over its full range of 0 to 5 amp. The values of magnetic field giving beam-current maxima do not vary appreciably with gas flow, arc current, or accelerating voltage.

With adequate gas flow and with the magnetic field set for the first beam-current maximum, the beam current increases linearly with arc current up to the 2 amp limit of the arc current. The ratio of beam current to arc current, 0.01, is less than that obtained in pulsed operation, and much less than that reported by Von Ardenne for cw operation.

For pulsed operation on a low duty cycle, the source can be operated under conditions such that part of the beam strikes the extractor. These conditions cannot be duplicated in true steady-state cw operation.

With the present geometry, the beam current depends only slightly on extraction voltage in the range from 45 to 60 kv. Beam divergence improves rapidly with increasing voltage but deteriorates rapidly with increasing arc and beam currents.

With 60 kv of extraction voltage, the spot diameter on the beam collector varies from less than 1 in. (beam divergence less than 2°) for a beam current of 2 ma to roughly 4 in. (beam divergence approximately 8°) for a beam current of 20 ma.

The largest beam current that can be obtained with the present geometry, without going to higher arc currents, is approximately 20 ma. If Von Ardenne's statements can be accepted at face value, there is more to be gained, at present, by systematically varying the anode and extractor geometries than by resorting to higher arc currents. If results comparable to those reported by Von Ardenne are to be obtained, the beam current for a 2-amp arc will have to be increased by a factor of at least 10.

Since changes in the anode and extractor geometries affect not only the electric field shape in the accelerating gap but also the magnetic field shape in the extraction region and the pressure distribution throughout the source, intuition cannot be relied upon to any great extent in the search for an optimum geometry. The search may be a long one.

Von Ardenne-type source, Model II parts list

1. Extractor, stainless steel
2. Anode insert, tungsten
3. Anode, mild steel
4. Extraction voltage insulator, epon and glass cloth
5. Ground flange, stainless steel
6. Anode water jacket, mild steel
7. Alumina spacer
8. Arc suppressor, stainless steel
9. Bore tube, stainless steel
10. Coil spool, epon and glass cloth
11. Z electrode, mild steel
12. Flux return, mild steel
13. Z-electrode water jacket, mild steel
14. Trigger electrode, stainless steel
15. Insulator, epon and glass cloth
16. Copper flange
17. Tungsten strip filament
18. Thimble (heat-shield holder), stainless steel
19. Thimble holder, copper
20. Cathode assembly housing, copper
21. Filament lead holder, copper
22. Stress absorber, epon and glass cloth
23. Stress absorber, copper
24. Gas line
25. Filament leads, copper
26. Fused enamel insulator
27. Tungsten heat shields

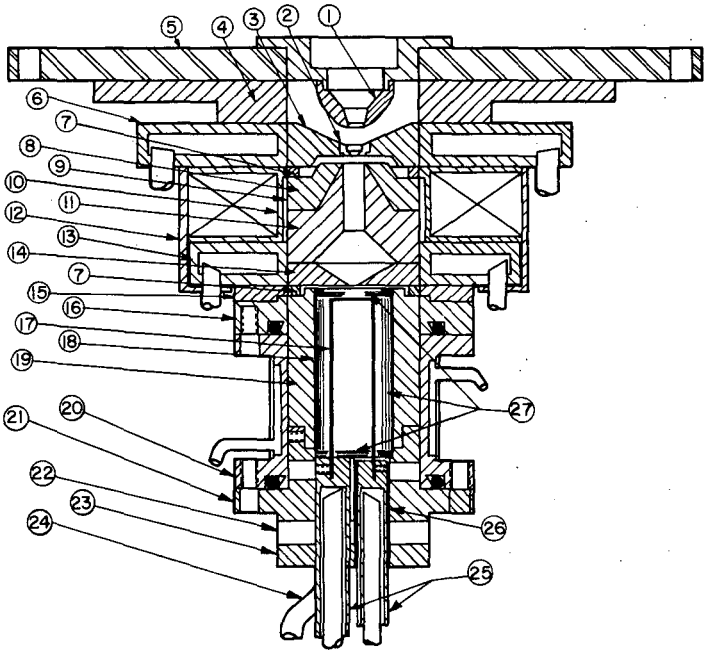

1. Extractor, stainless steel
2. Anode insert, tungsten
3. Anode, mild steel
4. Extraction voltage insulator, epon and glass cloth
5. Ground flange, stainless steel
6. Anode water jacket, mild steel
7. Alumina spacer
8. Arc suppressor, stainless steel
9. Bore tube, stainless steel
10. Coil spool, epon and glass cloth
11. Z-electrode, mild steel
12. Flux return, mild steel
13. Z-electrode water jacket, mild steel
14. Trigger electrode, stainless steel
15. Insulator, epon and glass cloth
16. Copper flange
17. Tungsten strip filament
18. Thimble (heat shield holder), stainless steel
19. Thimble holder, copper
20. Cathode assembly housing, copper
21. Filament lead holder, copper
22. Stress absorber, epon and glass cloth
23. Stress absorber, copper
24. Gas line
25. Filament leads, copper
26. Fused enamel insulator
27. Tungsten heat shields

MU-17826

Fig. 5. Von Ardenne-type source, Model II geometry.

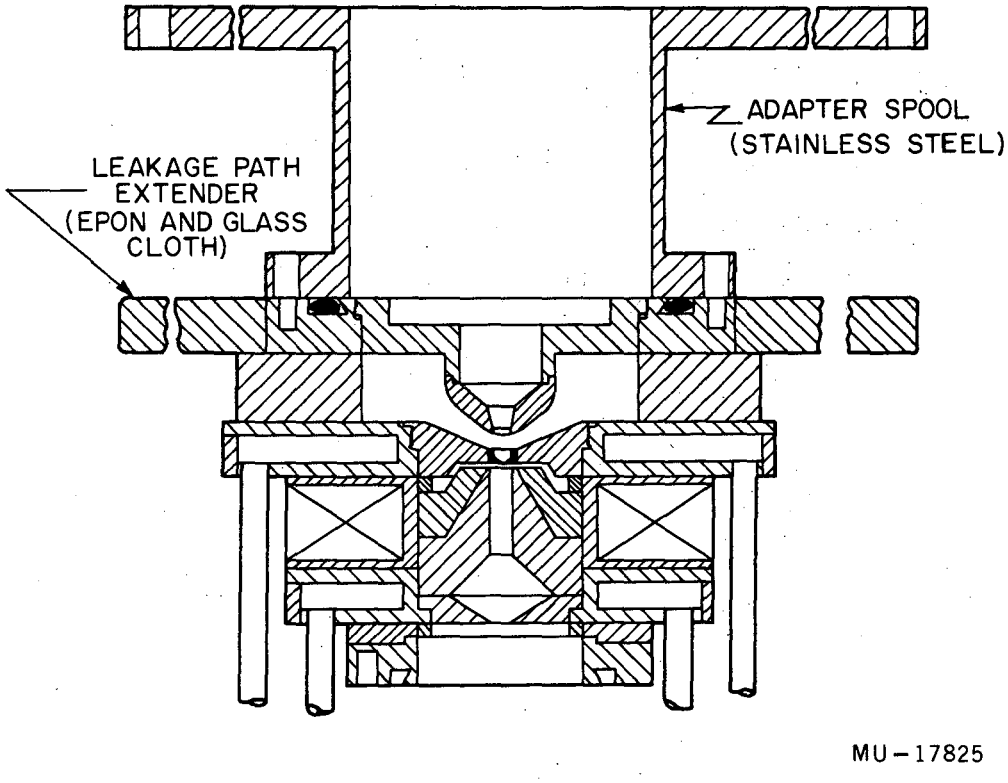

Fig. 6. Von Ardenne-type source, Model III geometry.

III. THE ASTRON PROGRAM

INTRODUCTION AND SUMMARY

N. C. Christofilos

Theoretical and experimental work were concentrated on the electron-injection system. The experimental effort was concentrated on preparation for the "dry run" experiment and development of measuring techniques. Electrons have been injected and about half the current reached the other end of the cylindrical space following the magnetic guiding groove. The system is not yet completely "debugged" so that only preliminary measurements on the beam have been possible. This activity is described in more detail by W. A. S. Lamb in a later section of this report.

The 5-foot injection traveling-wave line as well as the tanks and associated components are in fabrication. It is expected that these components will be completed and installed by about the end of the year. The remaining components required for the completion of the Astron model are an electron accelerator (2 to 2.5 Mev) and the injection-system components.

My effort during the past two months was concentrated in investigating various types of accelerators. The pulse length is an important factor in deciding the preferred type of accelerator. This in turn depends on the requirements of the injection system. There was a limitation in the injection system as initially proposed (based on the initial Astron concept as described in 1953); the rate of injection of the electron bunches was dependent on phase-space availability (Liouville's theorem). A time interval between injection of electron bunches was necessary for the phase space occupied by the previously injected electrons to be vacated, thus allowing injection of a new bunch. This shift in phase space was accomplished by the energy degradation of the electrons caused by Coulomb scattering with the residual gas. Recently, I discovered that it might be possible to introduce a dissipation term in the injection system, thus "uncoupling" the injection region from the E layer. Theoretical work on this new concept is now in progress. A favorable outcome of these calculations would mean an extremely simplified injection system for the Astron. Preliminary calculations show, however, that the new concept is effective only for high-energy electrons, namely for 5 Mev or possibly 3 Mev. Since there is no limitation on the rate of injection it becomes possible to reduce the pulse length and increase the injected pulse rate. The pulse length can now be reduced to 0.15 to 0.2 microsecond (whereas the pulse length previously was 0.5 μsec). This results in a simpler electron accelerator. The beam current, however, must be as large as before, namely 100 amp or more. Additional advantages of the new concept are that the requirements on beam quality and energy error are not as strict as before and the total time the electrons spend in the injection system is less than 1 μsec. Consequently loss of electrons from instabilities should be minimized.

It is hoped that within the next three months the design of both the injector system and the accelerator will be completed.

For very-high-energy electrons (above 20 Mev) the traveling-wave lines are not required at all. The injection system is reduced to passive circuits only, thus becoming rather inexpensive. As a result the cost of the Astron development practically becomes the cost of development and of building the electron accelerator and associated components. The device itself, the injection system, the E-layer vacuum tank, etc. become very simple. Since the construction of the injection system is simplified it becomes possible to keep the E-layer radius as small as 30 cm even in a power reactor. Accordingly it would be possible to use the present Astron model (now under construction) in all the steps required to prove the feasibility of the Astron concept. Minor changes will be required in the model itself. The main expense will be the extension of the electron accelerator to high energy as required in each successive step. The first step is 3 Mev, the second 5 Mev, and the last step 20 Mev. A detailed description of the new developments will be included in the next quarterly report.

Continuing theoretical studies do not indicate any new problems on the behavior of the E layer or the plasma. Dr. Lewi Tonks is continuing his work on the self-consistent field of the E layer. The results thus far agree with the original postulations. This work is described in more detail in the next section, prepared by Dr. Tonks.

ELECTRON-LAYER CALCULATIONS (CONTINUED)

Lewi Tonks

Having dealt with the case of single-type electrons, I have now carried out practically all the work necessary for a complete understanding of the behavior of electrons that, although all of the same energy, have a spread in canonical angular momentum. This is Stage 2 in the development of the general calculation. All the necessary machine results have, I feel, been done and a few hand calculations concerning subsidiary quantities remain to be carried out. A report which will be done in the form of a paper for publication has been partially written. As in the single-type case, reversal can be achieved; in fact, a reversed field in excess of the impressed vacuum field was found for some conditions. These extreme cases, however, show a type of pathological behavior similar to that found earlier. Here there is no actual discontinuity in the magnetic field as the layer strength is increased, but this field can decrease more and more precipitously to a cusp in the reversed field region. At these strong fields the curve which delineates the course of the magnetic field versus changing layer strength is looped so that at one and the same layer strength one can find two field strengths which satisfy the conditions of the problem, and at the same field strength one can find two satisfying layer strengths. A gratifying result of this part of the problem has been to find that, where comparable, the present results duplicate those found several years ago in the trajectory analysis of a plasma, reported in UCRL-5302.

The coding of Stage 3, namely that formulation of the problem in which the electrons slow down under the purely viscous action of the plasma, is still not out of trouble. The code which has been written was giving consistent and convergent results for a coarse mesh, but developed trouble when we went to a finer mesh. This is now being actively debugged. Regarding what happens to the electrons under this assumption as they near the end of their life, I am convinced that their transverse or radial motion becomes more and more violent relative to their circulatory motion so that finally the stream breaks up into two whirls of electrons, one to either side of a dividing circle that lies slightly in the negative field region. We shall, however, neglect this aspect of the motion for the reason (as given in the preceding quarterly report) that when the real problem is tackled the scattering of the electrons will overpower any such breaking-wave effect. Dr. Thomas Seidman and Miss Dorothy Monk have been responsible for the coding. Mrs. Virginia Hansen has assisted with hand calculations and Dr. Richard Levee has been helpful in consultation on the coding.

On the final stage of the problem there has not been much progress, mainly because it has seemed to be important to get the earlier stages well in hand and dealt with before proceeding. It has however, been possible to formulate the equation for the diffusion of the relativistic electrons in momentum space, the three coordinates in this case being the total momentum, the axial momentum, and the canonical angular momentum. This equation is of second order with a mixed derivative to govern the scattering, and includes first-order terms to govern the slowing down. It seems rather formidable.

I have in this period also been concerned with the effects of the angular momentum brought into the plasma by the E-layer electrons. I am now persuaded of N. Christofilos' point of view that the back emf associated with any such rotation is small compared with the injection energy of the electrons, but it still seems necessary (although less urgent to me), that the effects of a general rotation of the plasma on the pressure balance in the plasma be evaluated.

ASTRON dc TEST

W. A. S. Lamb

During this period the following steps were accomplished:

(a) The electron beam from the accelerator was electrostatically analyzed in order to calibrate the capacity divider used to monitor the voltage during operation.

(b) A new type of cathode heater was developed, using stranded tungsten with more radiating surface than before and with fewer splices.

(c) Preliminary results were obtained with the dc test facility shown in Fig. 7.

Probes mounted on rods that can be positioned axially through vacuum seals were developed for use in tracing the beam down the solenoid. The two shown are typical. The lower probe is used to measure the axial extent of the beam and the upper probe the radial. Each assembly has provisions for six independent signals, which in these two cases are six collectors on each probe. The position and extent of the beam as it spirals down the solenoid can readily be measured with these devices. Misalignment errors and magnetic field irregularities can be deduced from observations of beam behavior.

In order to obtain clean signals from these targets it is necessary to observe some precautions associated with good high-frequency technique. In particular the metering resistors (usually 1 ohm) must be mounted as near to the target as possible to minimize pickup, and all signal lines must be terminated.

With a magnetic shield 2-1/2 in. in inside diameter the beam is injected into the annulus defined by the structure supporting the "magnetic groove coils" and measured 1/4 turn around by the probe. Typical currents used for these experiments as measured at this point are from 30 to 35 amperes.

It was soon observed that the magnetic field in the region of a flange in the vacuum system, where the windings had been led over the obstacle, was responsible for serious beam losses. An effort was made to minimize this "hump" in the field by putting these turns on an independent power supply. Although the disturbance was minimized it could not be eliminated. Under these conditions we obtained 20 amp 35 in. from the inflection point with a beam that was about 6 in. axially and 3 in. high. This implies that the beam is still quite recognizably a beam after more than six turns around the solenoid. The main coil will be rewound to eliminate the irregularity in the field.

In addition,

(d) The accelerating column of the electron accelerator is being redesigned in order to improve the voltage-holding ability of the electron gun and its reliability of operation.

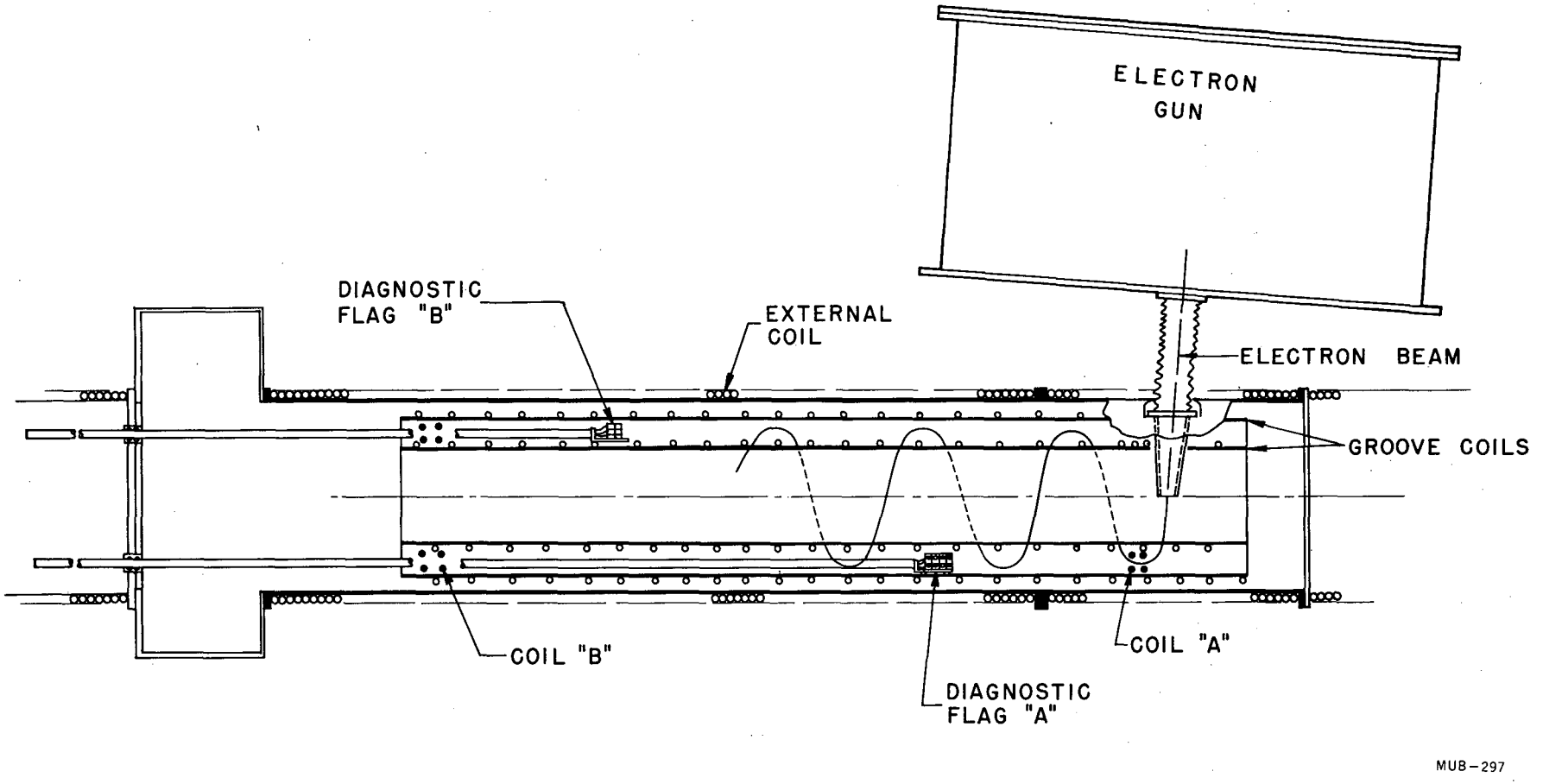

Fig. 7. Astron beam-testing facility.

(e) A thyratron switching system will soon be installed to replace the spark-gap switches for the pulse lines which energize the primaries of the electron gun, to obtain more reliable pulse-to-pulse performance and to provide greater flexibility in operation.

IV. LIVERMORE PINCH PROGRAM

Stirling A. Colgate and Harold P. Furth

The primary objectives of the pinch program are still the diagnosis of the small-scale turbulence that is interfering with the pinch and the further investigation of the mechanism by which the plasma energy is carried to the wall.

"HARD-CORE" PINCH EXPERIMENT

The major contribution to these objectives has been the development of the ability in the "hard-core" pinch experiment to make magnetic field distributions that exhibit turbulence or quiescence on magnetic probe traces, according to the programmed field distribution that is trapped in the plasma.

Figure 8 shows the construction of the hard-core pinch, with its axial center rod, coaxial cylindrical insulators, end electrodes, return conductor, and external-field coil. It also shows the electrical circuitry used to obtain the magnetic field distributions of Fig. 9 (as observed by a multiple-loop magnetic probe).

The field distribution in Fig. 9a was obtained by using bank 5 to make an initial H_z field that was then pushed radially outward by an H_θ field introduced by a current on the central rod from bank 1. Inductance d was disconnected, and inductance e minimized. Preionizing bank 9 was used. Note the "zeros" of both field components at the boundaries. The magnetic-probe traces taken in this case show marked evidence of small-scale turbulence. Since H_θ drops off faster than $1/r$, the theory unequivocally predicts hydromagnetic stability for this case. The actual observation of instability proves that nonhydromagnetic effects are at the root of the trouble.

The distribution in Fig. 9b was obtained by creating an initial H_θ with bank 2, and then firing bank 1. A dramatic reproducibility and absence of turbulence are observed in the probe traces. This seems to be related to having no zeros in either H_z or H_θ at the boundaries. In other words, it is found that stability is related to the degree to which the vacuum configuration is approximated. Stability does not seem to depend strongly on the absolute magnitude of the pinch current, or on the initial gas pressure. The configuration of Fig. 9a was also studied at 1/2 and 1/3 magnetic field amplitude, and at 50 to 1000 μ initial pressures in deuterium and argon. In every case the pinch was found unstable, though less violently so at low currents and high plasma densities. Similarly, configurations like that of Fig. 9b were found stable at the lowest gas densities at which ionization was satisfactory (50μ) and at current densities more than twice as great as those for which the la-type configuation was found unstable. A slight dependence of stability on the speed of pinching was found, by letting the pinch currents rise in 7 μsec instead of the normal 20 μsec. Under these conditions, inertial effects became obvious and there seemed to be somewhat greater freedom from high-frequency hash, though the probe traces were still not perfectly reproducible.

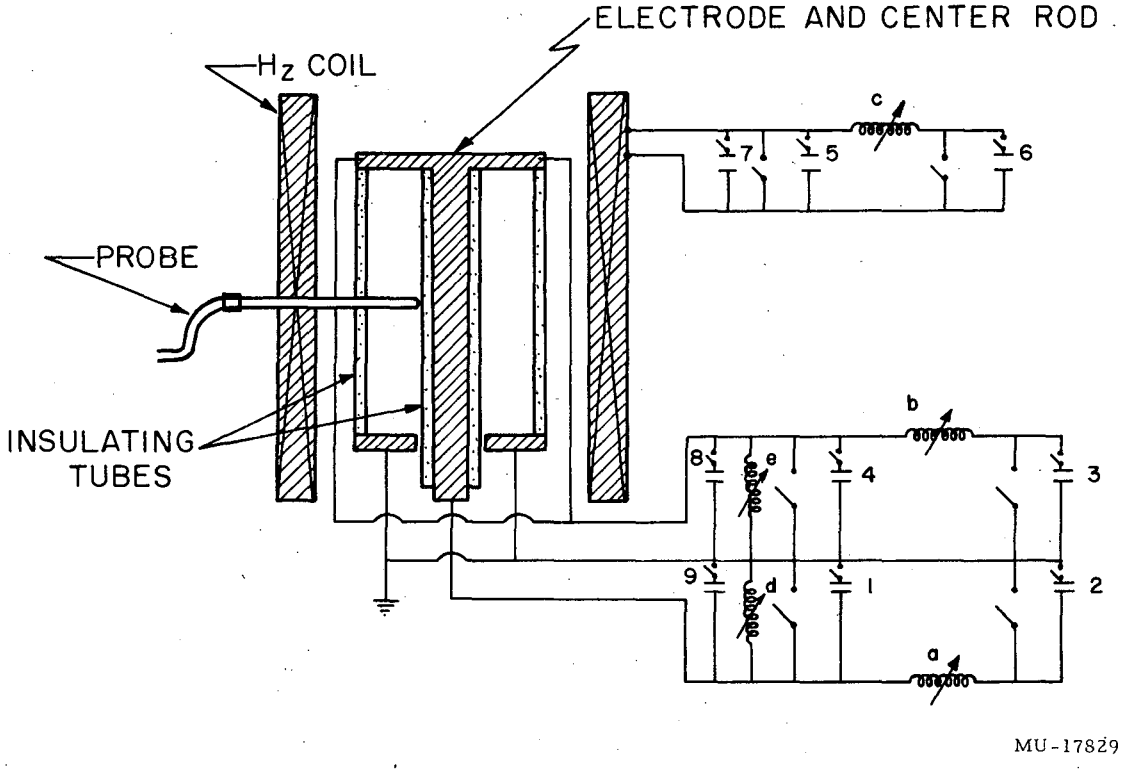

Fig. 8. Construction for hard-core pinch.

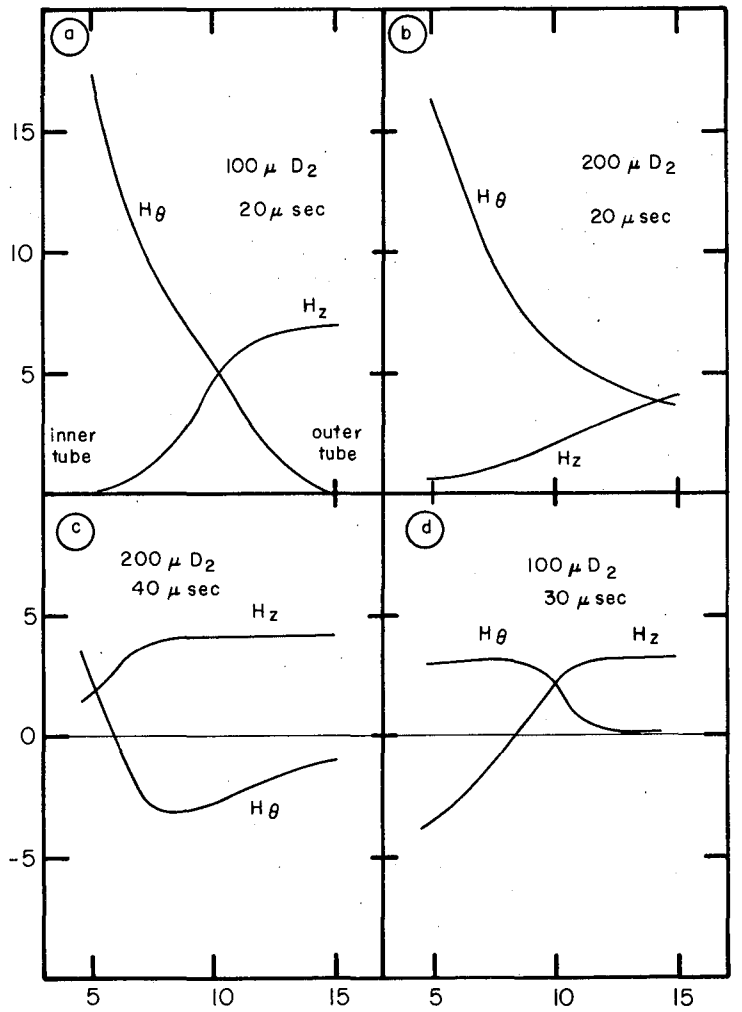

Fig. 9. Parameters for magnetic field distributions.

The data can be summarized roughly by the following picture. Wherever large pinch currents flow, these tend to energize the plasma, probably in a much more vigorous manner than is envisaged by single-particle scattering theory. The energized plasma tends to be confined to the degree to which the magnetic field configuration has "shear." If the shear is produced solely by current flowing in the plasma, then there is no stable regime, no matter how great the shear is. (The greater the shear is, the greater is the current density in the plasma, and the energization of the plasma, and hence also the ability of the plasma to escape.) To the extent to which the shear is produced by vacuum fields, there is no associated energization of the plasma. It is therefore plausible that if a sufficiently large vacuum field of a type possessing high shear is superimposed on a pinch discharge, the energized plasma can be effectively contained. This seems to be what is happening in the distribution shown in Fig. 9b. It is possible, of course, that instabilities are still present, even though the magnetic probe traces are smooth and reproducible. This possibility will soon be examined further by means of electrostatic probes. The most satisfactory way of demonstrating the presence or lack of containment is, of course, to create a hot plasma and prove that energy is not leaking from it at an abnormal rate. Since this critical experiment is hard to do in a linear pinch, it is planned to proceed with the construction of a toroidal 12-in. "Levitron."

Since there is no possibility in the present arrangement of introducing H_z flux into the pinch tube from inside the rod, the distribution of Fig. 9b was made by controlling the ionization so as to let considerable H_z flux be left behind during the unpinching with bank 1. This was an unreliable method of programming the fields, and therefore the method of introducing all fields from the outside (regular pinch or collapse) was used in order to obtain more general and repeatable distributions.

In one arrangement being used at present, inductance e is disconnected, inductance d is set at zero and bank 6 is used to introduce an initial vacuum H_z. Bank 4 then makes a fast-rising H_θ, and the tube is ionized at some point of the H_θ cycle, either by the bank 4 voltage, or by the preionizing bank 8. The resultant distribution is trapped and compressed in the plasma by a fast-rising H_z field (20 μsec) from bank 5. Depending upon at what point in its discharge cycle bank 4 is crowbarred, an H_θ distribution with no zero, a boundary zero, or a trapped zero can be formed. Figure 9c shows a distribution with a trapped zero in H_θ. For this condition turbulence is observed, especially at low gas pressure.

A distribution with a trapped zero in H_z (Fig. 9d) can be formed by a change in polarity of bank 5 with respect to bank 6. The relative quiescence of the probe plots obtained in this case shows a distinct difference in effect between a trapped zero in H_θ and internal zero in H_z.

In either case there is high current density near the field zero, so that the plasma should be energized. The difference in behavior may be due to the fact that the zero in H_θ gives a region of zero shear <u>external</u> to the current-carrying region, while the zero of H_z gives a region of zero shear <u>inside</u> the current-carrying region and gives a region of infinite shear outside.

If the plasma is energized by the current, then the plasma will be decreasing outward from the current-carrying region. Hence it can be shown that the magnitude of the shear matters only outside the current-carrying region. The possible stabilizing effect of a trapped zero in H_z and the destabilizing effect of a trapped zero in H_θ were predicted earlier.[1]

It has been of interest to study the dependence of plasma resistivity on configuration, and in particular, on whether or not the configuration appears stable. This can be done by observing the rate at which magnetic fields interdiffuse. No dramatic difference between stable and unstable configurations has been observed so far. One point that has been extremely striking is that in our 12-in. tube the fields relax to a vacuum configuration in less than 100 μsec, no matter what the initial configuration. This contrasts with pinch half-cycles up to 500 μsec in 12-in. conventional "stabilized" pinch tubes. The significance of this observation is not hard to understand. In a conventional tube, the magnetic field cannot relax to a vacuum configuration. H_θ flux is continuously introduced from the outside and diffuses toward the axis, where it disappears. The result (from requirements of pressure balance and Ohm's law) is a kind of dc distribution, with H_z peaked on the inside and H_θ peaked on the outside. Thus the shape of the conventional "stabilized" pinch is due partly to transient phenomena, and partly to proximity to the dc distribution. In the hard-core pinches, the dc distribution is the vacuum configuration, hence one observes only true diffusion phenomena, and these are over rather more quickly than one might have guessed. In order to investigate this matter further, it is planned to study conventional "stabilized" pinches, with inductance d taken infinite, and then vary inductance d down to zero. By noting the rate at which the H_z distribution relaxes, one can get a measure of the true diffusion effect in each case.

A new tool has been developed for studying the distribution of plasma density in a pinch. A small fast oscillation (~ 300 kc) is superimposed on the main pinch current, thus giving rise to radial compression waves. The progress of these compression waves can easily be followed by noting the (unintegrated) signal from a string of pickup coils in a radially oriented quartz probe. The theoretical Alfvèn velocity of the compression waves depends only on the magnetic field, which is known, and on the mass density of the plasma. Experiments conducted on the configuration of Fig. 9a show the expected dependence of transit time on magnetic field strength and initial gas pressure. Deuterium and argon were used. It was also found that the waves traveled very rapidly over the first 4 cm outward from the center rod, and then more slowly. This agrees with the notion that the plasma has been swept out of the central region by the unpinching action of bank 1.

In the radial-compression-wave studies, a sinusoidal signal has been used. It is found that the first wave crest propagates very much as expected theoretically, but after a few cycles the phase lags from probe to probe become different, presumably because wave reflection from the boundary of

[1] S. A. Colgate and H. P. Furth, Small-Scale Instabilities of the Pinch and a Suggested Remedy. The Levitron, UCRL-5392, Nov. 1958.

the pinch is beginning to play an appreciable role. By studying the interference of the radially outward- and inward-moving waves one can hope to get more highly precise results on the density distribution than has been possible on the basis of the propagation of the first crest of the outward-moving wave.

The possibility of neutron production in the unstable configuration of Fig. 9a was investigated with a large scintillation counter. Neither hard x-rays nor neutrons were observed, even at initial pressures as low as 10 μ deuterium.

More exhaustive experiments on more and more complicated distributions will be attempted, but the large perturbations of the electrodes, both magnetically, because of the nonpenetration of the magnetic fields, and in plasma conductivity, because of cooling and possible sheath formation are likely to mask subtle effects. It is planned to lengthen the linear hard-core pinch in order to gain some qualitative information on the perturbation introduced by the electrodes, but the arrangement will not be completely satisfactory until the toroidal version is built.

In view of the many interesting results obtained by generalizing the pinch configuration, some thought has been given to generalizing other standard plasma experiments along hard-core lines.[2] In particular there seems to be some merit in hard-core arcs, both dc and ac, and in hard-core PIG's and spark gaps. In connection with the last item some experience has already been obtained by studying the effect of initial H_θ on gas breakdown in the hard-core pinch tube. The relative amount of initial H_θ and H_z determines the length of a magnetic-field line between the two electrodes. Altering this ratio is therefore roughly equivalent to altering the length of the tube, which is known to have a strong effect on breakdown at low gas pressures. Just as expected, it is found experimentally that increasing H_θ/H_z from zero facilitates breakdown in a very marked manner. This suggests that in a hard-core spark gap very rapid control of proximity to the breakdown point can be achieved electronically.

ELECTRON-BEAM EXPERIMENT

A pulsed 200- 300-kv electron beam has been passed along the center and near the current surface layer of a "stabilized" pinch, and observed on a phosphor protected by foil. The lateral motion of the beam has tended to be irreproducible from shot to shot, and is much larger than expected from naive considerations of the path of a line of force in the pinch. The 3-in. pinch has been shortened to half its original 6-diameter length by an extension of the electrodes, in order to reduce the lateral movement of the electron beam. However, the behavior of the beam during the time of the pinch is still so erratic that time resolution of the beam writing speed has had to be increased in order to follow the time history of the beam motion

[2] Harold P. Furth, On the General Applicability of the Hard-Core Technique in Plasma Research, UCRL-5572-T, May 1959.

in greater detail. The required improvement of the electron gun both in current and in voltage is proceeding. However, already the initial result of large and erratic lateral motion of the electron beam is indicative of the type of nonadiabatic process that we hope to investigate.

PLASMA-ACCELERATION EXPERIMENT

The original 60-kv matrix Marx bank has been replaced with a gap-to-gap ultraviolet-illuminated system (40 kv, 200 ka, 2 μsec), using the technique developed in connection with the large 300-kv matrix Marx bank. The operation of the gaps is now more reliable. Initial probe measurements have been made on an accelerator geometry consisting of a cylindrical metal tube, a flat end insulator and a coaxial button electrode. The pulsed gas valve injects a gas cloud roughly 10 cm in dimension through the button electrode, and the pinch breakdown apparently occurs in the normal fashion. The presence of a current boundary layer has been established.

The fast accelerator bank facility using 0.5-μsec condensers is being constructed. Heated ignitrons give sufficiently small jitter time and fast enough rise to be used as the primary switches, but the final decision on gaps versus ignitrons has not yet been made.

SODIUM RADIOFREQUENCY ANALOG EXPERIMENTS

The 20- to 40-sec^{-1} repetition rate of the rf bursts used to move the liquid sodium is sufficiently low so that the Taylor instability is a serious limitation for some experiments. Consequently, a higher-repetition-rate generator is being built that should have a wider range of frequency control. It is useful to observe the Taylor instability in some cases because it demonstrates the possibility of creating instabilities in a controllable fashion.

300-kv MATRIX MARX BANK

Three rows of 15 condensers each have now been fired in parallel into the pinch load, and the firing circuit with gap-to-gap ultraviolet illumination works well. It is expected that the system can soon be extended to the whole bank of 19 rows.

SODIUM PINCH EXPERIMENT

Parts have been completed to make the "hard-core" geometry in the sodium pinch analog. By means of a shunting inductance for H_θ or by using

an external H_z coil, field distributions with an internal zero in H_θ or H_z or with no zeros can be made. The comparison of the observed stability with that for the hard-core plasma should give valuable information on the suspected differences between a plasma and a fluid that has on hydromagnetic behavior.

THE LEVITRON

The cooper shell and hard core of the Levitron are on order, and an acceptable bid on the stainless steel liner has been received.

An analog experiment on core levitation was performed with 60-cycle power using a 0.5-in. tubular ring inside a 1.5-in. i.d. toroidal wire cage. A levitating effect was observed, but the dependence of its magnitude on current was obscured by the fact that the ring current was out of phase with the cage current, owing to higher resistance in the ring. A slightly larger version, with a 0.5-in.-thick toroidal copper shell of square cross section serving as the outer shell, was then fabricated to check the levitating theory more accurately. With this device it is possible to maintain the ring completely levitated on a dc basis. The rms current used is about 2500 amp. The ring oscillates slightly about its median position, picking up the required kinetic energy from the 60-cycle current, but the oscillation is sufficiently slight to permit probe measurements on the levitating field. The field distributions can be checked against theoretical distributions obtained with the analog electrolytic tank developed for the high-field work. We have plotted the height of the equilibrium position vs. driving current and obtained agreement with the theoretical curve within a few percent.

No radically new phenomena were expected with this model, since we have pretty good theories of field distribution and dynamic and equilibrium effects in the Levitron. In the building of such a complex and radically new type of pinch device, it is reassuring, however, to have observed successful operation of the basic mechanism on a small-scale model.

HIGH-FIELD EXPERIMENTS

Highly accurate contours have been found for spool-type force-free coils, using the analog method described in the preceding report. The effect of windows in the flux-repellent end plates of the spools has been studied, and appropriate corrections in the coil shapes have been derived. A spool-type coil of 1-in. i.d. and 5-in. length, with 1-in. central windows in the end plates, is being built. The central section of this coil will be completely unsupported mechanically, and about 50% optically accessible. Operation at a minimum of 100,000 gauss for 400-μsec pulses is planned. The object is to show that a highly accessible region of high magnetic field can be provided, e.g., for use inside bubble chambers or on high-access plasma experiments. Force-free configurations inside spherical shells have also been computed, for purposes of comparison with theory.

A high-magnetic-field research laboratory housing the 150,000-joule bank from the Bevatron run has been set up. The four 200,000-gauss coils from the Bevatron run will be studied further under various conditions, such as vacuum impregnation with epon, to see whether the present coil lifetime of about 7000 shots can be extended.

The emulsions obtained during the Bevatron run have been studied by the nuclear emulsion group, and found completely satisfactory. The mean magnetic field, as obtained from curvature measurements on known events, is very close to 200,000 gauss, and the standard deviation of momenta as estimated from magnetic curvature of energetic π mesons is the expected 10 to 15%. Significant results on the ratio of π^+ to π^- mesons from K^- stars in heavy nuclei have already been obtained, thus settling what had been a controversy.

V. BERKELEY PINCH PROGRAM

THE TUBULAR PINCH

Oscar A. Anderson

The 10-inch Triax Experiment

In the preceding report it was stated (hopefully) that the new 10-inch Triax would soon be in operation. The hope has been thwarted by some unforeseen difficulties with the switch gear. These appeared when one of the four switches intended for this installation was used on another experiment being carried on while awaiting completion of the 10-inch Triax. Breakdowns occurred from the switch electrodes to ground, damaging the associated parts inside the switch. Fortunately this difficulty was experienced with a small condenser bank rather than the one intended for the large tube; the damage might otherwise have been quite severe.

Several modifications were made to the switch to improve its reliability, but the switch probably would be suitable for use on the large bank unless completely redesigned. A number of new designs incorporating all-solid insulation have been produced in cooperation with the engineering group. Model work has already shown that some of the designs have several times the safety factor of the old one.

The other parts of the experiment are in good order, fortunately. The tube itself was completed in April, and the condenser bank has been ready since the first of the year. An improved magnetic-probe assembly has been designed and built. The key features are: (a) settings reproducible to ± 0.002 in; (b) well-shielded 50-ohm connection lines; (c) adaptability to 2-, 3-, and 5-mm quartz tubing, the larger sizes being intended for use at high power levels; (d) no exposure of organic materials; (e) 35° swing angle; and (f) compactness.

Some of the other diagnostic equipment is still under design. Samples of the barium titanate piezoelectric material supplied by Brush have been obtained and small pieces cut from them for acoustic probes. Most of this work has been done so far by Alan Desilva in connection with his Homopolar II experiment, which of course involves a much slower time scale than the Triax. A special fast acoustic pulse generator is being built in order to calibrate and evaluate probes for use with the Triax and other fast pinches. This has not had high priority but is expected to be ready by the time the switches are.

Preheating Experiments

Although the delays mentioned above have been disappointing, they have allowed the time for some other interesting experiments. First of all, the work being done (by Elliot B. Hewitt) with the preheat cycle has been continued and has yielded some unexpected information. Previously (see preceding report) it had been shown that an interaction between the preheat

current and the main current could exist and could be detrimental to the pinch formation. Thus the basic plan in the ensuing work was to minimize this effect. At first this was done by synchronizing the firing of the main bank with the zero point of the oscillation of the preheat current. Since this was beneficial, the next step was to try stretching the time of null current. Thus a saturable reactor was installed which permitted the preheat current, after passing through its peak value (typically 4×10^4 amp), essentially to cut off, i.e., to maintain itself at a low value (less than 1 amp) for a definite length of time. At first this time was 2 μsec, then was extended to 10 μsec by the building of a larger reactor, and finally techniques were developed to maintain the low-current phase indefinitely.

The reason for these prolongations was that the plasma temperature resulting from the preheat cycle apparently stayed high much longer than originally expected. The diagnosis at first was made on the basis of the dynamic behavior of the main discharge, which was found (under certain conditions) to continue to improve for about 50 μsec after the preheat current had been cut off. With this fact to explain, attention was turned to other measurement techniques. (In the experiments to be described the main bank was not fired.) First, a spectroscopic study was made and no evidence was found for any impurity light; this checked with previous experience.[1] Then the D_β line was studied to find its intensity as a function of time. This was found to increase rapidly after the bank was fired, then to fall off later during the current pulse. After the current cutoff the intensity slowly increased, rising again to a high value at 40 μsec, and finally falling away. (It will be recalled that the time scale of the preheat current itself is 2.5 μsec to peak, 5 μsec to cutoff; for other details see the preceding reports.) Other Balmer lines were studied and all showed similar characteristics although differing in details such as amplitude. Only the first half-dozen or so lines could be observed, on account of the wide slit that had to be used, with the result that the series became obscured in the molecular spectrum. (This spectrum also followed the same general time pattern although its intensity was small. It should be noted, however, that the intensity of the first light burst was about the same, regardless of wave-length setting, with the slit width used.)

The third technique involves a thin wire probe to which a small positive voltage is applied at predetermined times. It is found that right after cutoff the probe current is so high that it is very difficult to maintain its voltage. If the pulse is applied at 100 μsec the current falls to something like 0.1 amp, while at 200 μsec it is 0.01 amp. Beyond this there is risk of confusion because the preheat current has not actually been completely cut off, although it is something less than 1 amp.

These measurements made so far are not conclusive, but it is not inconceivable that the plasma temperature remains at several volts for dozens of microseconds after cutoff in spite of the proximity (1 cm) of the insulating wall. This would be sufficient to explain the continued good dynamic behavior

[1] Anderson, Bake, Ise, Kunkel, Pyle, and Stone, The Triax Pinch Device, UCRL-8153, Jan. 1958.

of the main pinch when fired at such late times. However, the observed optimization already mentioned is harder to explain. Perhaps under the prevailing conditions a better pinch can be formed by starting from a lower temperature, although it is hard to see why. On the other hand it may be that there are instabilities and trapped magnetic fields remaining from the preheat cycle, but it is even harder to see why these should take so long to relax. It is planned, therefore, to make other measurements in an attempt to answer these questions.

Future Plans

During the next few months an attempt will be made to measure quantitatively the temperature following the preheat cycle. The use of a Langmuir probe is one method under consideration. This technique is most straightforward in discharges with low currents, and the present experiment offers an opportunity for ideal conditions in this respect, since during the time of interest no discharge current whatsoever need flow. Accordingly attempts are being made to cut the current off completely immediately after the 40,000-ampere pulse. For this purpose several switching methods are being studied.

It is unfortunate that the electrode construction of the present tube makes the introduction of magnetic probes particularly inconvenient. Originally plans were made to carry out magnetic measurements during and after the preheat period with the same tube and equipment used for the original probe work,[1] but this has proved impossible. Still this is certainly a worthy technique to employ, although it may have to await the operation of the 10-inch Triax.

As already stated, the 10-inch machine in turn is waiting for its new switch gear. The present engineering schedule as estimated by Lawrence Crooks is: Four more weeks for tests, 4 weeks for final design, and 4 weeks for fabrication. Thus it seems doubtful that the 1-inch Triax will be in operation until the fourth quarter of this calendar year.

Finally, a small-scale experiment which has just been started may be described briefly. This consists of a sheet pinch, not of the usual tubular shape but in the form of a ribbon. The size of the present device is dictated by available quartz tubing, which is supplied by General Electric in a $1/2 \times 2$-in. cross section. The over-all length is 12 in. (although this is not the maximum available). Unfortunately the wall is quite thin and fragile and the condenser bank must be limited--12 μf is being used at 10 kv. Kerr-cell and magnetic-probe measurements are being carried out by Mervin Gray, and it is already evident that something can be learned in spite of the small size of the tube, although nothing yet can be reported here. The interest in the completely flat sheet pinch was inspired by the opinion of Dr. Lloyd Smith that an infinite plane pinch would be neutrally stable, hydromagnetically. The eventual purpose of the ribbon pinch experiments will be to investigate the effect of the edges on stability and to try out some ideas on avoiding difficulty at those places. The present small tube can be considered to be a preliminary model; if it looks interesting enough, ways will be found to go to larger sizes.

STUDY OF RADIATION FROM THE TUBULAR PINCH

Wulf B. Kunkel and John M. Stone

In the high-current Triax discharge operating at currents above 1,000,000 amp the dissipation rate during the second and third microsecond is of the order of 10,000 Mw and continues high until the available energy is used up. Beginning after about 2 (or perhaps 3) μsec the whole tube is seen to emit very strong continuum radiation in the visible and near ultraviolet. Quantitatively, however (as will be shown), this emission represents only a very small fraction of the total power dissipated. It has been stated by J. A. Phillips and co-workers at LASL that practically the entire power dissipation in Perhapsatron S-4, and perhaps in most other pinch discharges, can be accounted for by impurity radiation in the far ultraviolet. This comes as a surprise to us because earlier estimates on the maximum radiation from the Triax discharge had indicated that absurdly high contamination levels (in excess of 10% by particle concentration) would be required to account for the observed power loss. Stirling A. Colgate at Lawrence Radiation Laboratory (Livermore), on the other hand, has come to the conclusion that in his toroidal pinch discharge most of the power loss may be accounted for by an excessive drain of high-energy electrons which find their way to the tube walls, i. e., a lack of confinement. Colgate's results were based on a study of x-ray production.

In an attempt to clear up this point as far as Triax is concerned, x-ray and ultraviolet emission studies are in progress. A vacuum-ultraviolet spectrograph is on order. A simple ultraviolet-sensitive photocell has been constructed and applied to detect the radiation from the "open screen" Triax. This latter tube, which has a copper screen instead of a closed copper shell as the outside return conductor, is remarkable in that it emits a startling explosionlike noise when it is operated at a sufficiently high level. This noise disappears when the surrounding air is replaced by helium. Apparently the tube, which is made of clear fused quartz, acts as a high-yield pulsed ozonizer, coupling sufficient energy into the air via photodissociation of oxygen to produce a considerable shock wave. After each discharge the air surrounding the tube smells of oxides of nitrogen, which is characteristic of all ozonizing discharges.

So far the photocell has been used only to look at the radiation transmitted by both the quartz tube wall and 2 in. of air. The photocathode was made of cadmium and the cell was separated from the air by a calcium fluoride window. The photoelectric emission signal under these conditions was seen to be roughly synchronous with the visible impurity radiation, i. e., the intensity was negligible for the first 2 μsec and rose rather sharply at the time the pinch dynamics suddenly disappeared. The peak power radiated by the entire tube and detected in this way, i. e., after attenuation by both the quartz and the air, was estimated from the magnitude of the photocurrent and from a guess at the photoelectric efficiency to be of the order of 10 kilowatts. While this figure may easily be in error by one or two orders of magnitude, it seems a little small when compared with the total dissipation rate to be accounted for.

It is obvious that this type of investigation will have to be extended to the vacuum ultraviolet. It is therefore planned to remove the air between the photocell and the quartz wall of the Triax tube in order to estimate the amount of energy absorbed in the air which causes the explosion noise. Subsequently the photocell will be differentially pumped so that it can receive radiation from the discharge through a small hole in the quartz wall and without need of the fluoride window.

It has been conjectured that the plasma in the Triax discharge may radiate substantial power at frequencies near the plasma frequency which, in the discharges under investigation, involves wave lengths in the neighborhood of 300 μ. Quartz, crystalline or fused, exhibits a window at wave lengths longer than some 50 or 100 microns.

A detector sensitive to submillimeter waves was made by rolling an iron-constantan thermocouple to a thickness of 1 or 2 mils and cementing to a thin carbon wafer. Exposed to the radiation passing through the quartz wall of the Triax without interposed filter, the detector gave a substantial signal showing a rapid rise followed by an exponential decay with time constant of 3 sec. Interposing a sheet of polyethylene reduced the signal by some 20%. The signal was reduced to zero by polyethylene with an opaque layer of soot, which is known to be transparent to wave lengths greater than about 100 μ but to no shorter wave lengths. The conclusion is that no significant radiation is emitted at wave lengths greater than about 100 μ.

The signal obtained with no filter is due to radiation in the visible and near ultraviolet up to the cutoff of quartz at about 1850 A. If this signal is given the arbitrary value 100, the signal obtained with a filter of soft glass cutting off at 3200 A was 60, and with a gelatin filter plus soft glass cutting off at 5300 A it was 30. These rough measurements indicate a rapid increase in spectral intensity with decreasing wave length. No satisfactory method has been developed for calibrating the thermocouple detector, but it seems certain that the observed signals represent energies far too small to be of significance in the general problem of energy balance.

The possibility that the Triax discharge gives rise to appreciable mass motion of positive ions in the longitudinal direction has been ruled out by photographing the spectrum along lines of sight in opposite directions. No line in the spectrum showed detectable Doppler shift.

HOMOPOLAR III

Alexander Bratenahl and Wulf B. Kunkel

The field-correcting coils have been installed and the PIG-type discharge at the inner electrode has been eliminated--and along with it the outgassing of the vacuum gaskets. Other additions include the installation of a pair of external dc coils to modify the magnetic field near the outer electrode, and several more current probes in the outer electrode.

Interest during this period has been concentrated on the current pulses observed on probes set in the surface of the outer electrode. These pulses appear immediately after the plasma is set in rotation and continue for some 500 μsec. The probe studies reveal the pulses to be due to rather equally spaced arcs (after the first 100 μsec), about 12 in number, traveling with the rotating plasma. The total current in each arc is of the order of several hundred amperes and the current from the 12 arcs accounts for most of the loss of stored energy in the system (homopolar plus capacitor bank). The contact of these arcs with the outside electrode measures 2 to 3 cm in the direction of motion, and extends laterally some 30 cm in the direction parallel to the magnetic field lines. Although their cause remains obscure, it seems likely that the combined effect of viscosity, centrifugal force, and possible a transient anode sheath bring about a turbulent flow at this boundary, analogous to the well-known Couette flow turbulence in ordinary hydrodynamics. With the new dc external coils it will be possible to divert some of the field lines lying close to the outside electrode into the electrode itself, thereby removing the motor force from a layer of plasma lying in this region. By this alteration of the outer boundary it is hoped the conditions for arcing will be modified or inhibited.

A highly simplified analysis of viscous effects in rotating plasmas has been carried out by using a continuum-flow treatment. In the infinite-cylinder approximation (complete cylindrical symmetry), with the assumption of uniform viscosity, the steady state has a simple analytical solution for the velocity as a function of the radius. As a result the local viscous dissipation rate and the effective electrical resistance of the rotating plasma as a circuit element can be expressed explicitly. It is then readily demonstrated that the rate of thermalization of ordered motion in hot plasmas is relatively slow compared with other dissipation rates. On the other hand, if the relationship between viscosity and temperature is known, a direct measurement of the effective resistance can be used to estimate the plasma (ion) temperature.

VI. THE ION MAGNETRON

J. Donald Gow and Robert W. Layman

IONIZATION IN THE ION MAGNETRON

Introduction

Although the nature of the discharge in the ion magnetron is fairly well understood, there is some question as to the relative importance of various ionization mechanisms. From visual observation, consideration of the geometry, and the E and H field relationship, a sheath of circulating electrons is assumed to be formed around the central anode. Sheath thickness, density, and transit time of neutral molecules entering the sheath suggests a high probability of ionization of these neutrals.[1]

Erosion patterns on the liner in the regions where it is threaded by magnetic field lines indicate that a large percentage of the ion current is terminated on these areas. Since lines threading one end of the liner also thread the other end there exist paths along which electrons can oscillate. It is reasonable to assume that some of the ionization in the machine is due to such electron oscillation.

In order to determine the part played by the anode sheath, the initial rate of ionization was compared with the anode area. Because the sheath is very thin and is close to the anode, the number of neutrals at any given pressure and temperature striking the anode should be very close to the number striking the sheath. Therefore if the sheath is the principal ionizer, the initial ionization rate (the initial current) should vary directly with the anode diameter.

Experimental Geometry

Figure 10 shows one half of a longitudinal cross section of the machine. The other half is a mirror image of the half shown. Pumping is done from both ends with a liquid-nitrogen-trapped 10-inch oil diffusion pump. The D_2 inlet was located 4 in. beyond one end of the magnet coils. With this arrangement there is a 20 to 30% pressure drop down the liner. The pressure was read with four RCA 1949 ion-gauge tubes, two located at each end of the liner.

The anode is a hard drawn copper tube supported at both ends and stretched with 700 to 1000 lb tension.

The magnet is eight 9-in. i. d. water-cooled doughnuts, each composed of six pies. The total length is 48 in. The four central doughnuts are powered by a 360-kw minesweep generator, and the end doughnuts are powered by a 300-kw Perkins power supply. With this arrangement the ratio of end field to center field can be varied.

---

[1] J. D. Gow, L. Smith, and J. M. Wilcox, The Ion Magnetron, UCRL-8579, Dec. 1958.

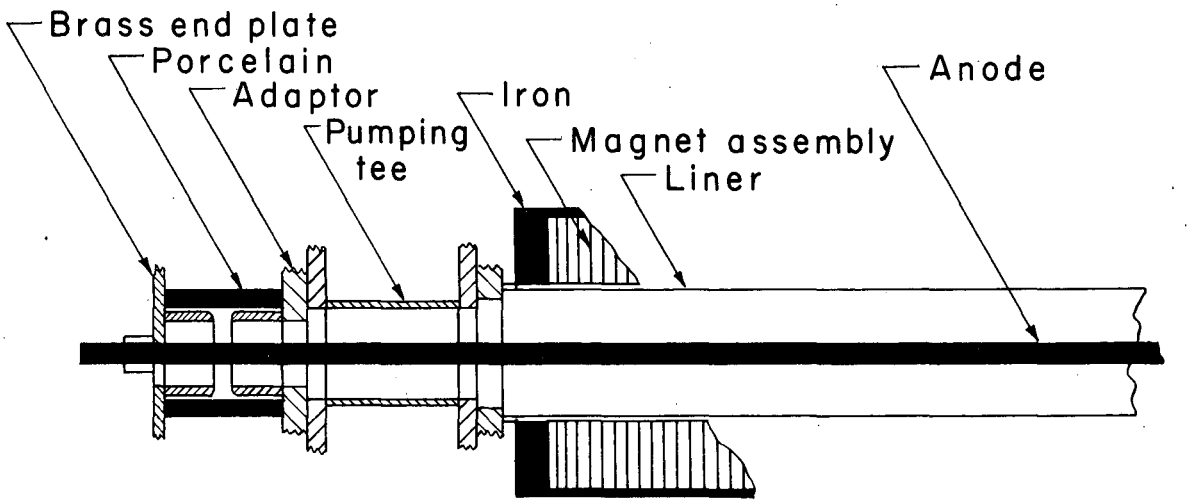
Brass end plate
Porcelain
Adaptor
Pumping tee
Iron
Magnet assembly
Liner
Anode

MU-17975

A 50-kw dc power supply provides the high voltage. In series with the supply is 500 ohms, a Jennings high-voltage relay, a 5C22, and 25 ohms. Across the supply is a 20-kv 25.5-μf condenser connected as shown in Fig. 11.

Experimental Procedure

With a D_2 pressure of 0.7 micron and the magnet on, the high voltage (12 kv) is pulsed by first closing the Jennings relay and firing the 5C22 10 msec later, at which time the jitter in the Jennings relay has completely stopped. One-half to 1 second later the high voltage is turned off by opening the Jennings relay.

The machine current is monitored by grounding the liner through a 1-ohm deposited-carbon resistor, the voltage across the 1 ohm being measured with a Tektronix 541 oscilloscope. To insure that the current was not being limited by the supply, the 25.5 μf was reduced to 8.5 μf. There was no change in current. To test for error in current amplitude due to voltage drop in the 25-ohm resistor the current as a function of voltage was examined, and it was found that from 10 to 12 kv there was negligible change in current. Since the maximum currents are 75 amp, the voltage drop is 1900 v, which presents no problem. Figure 12 is a typical current pulse.

Anodes with diameters of 1/4, 1/2, 1, and 2 in. were run. With each anode the center magnet coil was run from 300 to 1000 amp in 100-amp steps. At each center coil setting the end coils were varied from 300 to 1500 amp in 100-amp steps. The high voltage was 12 kv and the D_2 pressure was 0.7 μ when corrected for gage calibration.

Results

Figure 13 is a plot of initial current vs. magnetic field intensity. The mirror ratio is 1. Comparing the 1/2-, 1-, and 2-inch anodes, one sees that the initial current varies directly with the anode diameter. The 1/2-inch anode current appears to be about 5% higher than would result if all ionization were in the sheath. This could be current due to ionization not in the sheath, which would increase relatively with decreasing anode diameter. Although measurements were made at many different mirror ratios, results are based primarily on measurements at unity mirror ratio. Although the ratios of current to field hold reasonably well for other mirror ratios, some questions of sheath geometry remain to be investigated in longitudinally non-uniform magnetic fields.

The 1/4-inch anode current is high by more than 200%. It was found that sheath electrons were dumping on the anode support flanges by traveling along H field lines which threaded the sheath and the flanges. Because of this effect the sheath length was probably increased. One of the end flanges was insulated from the anode and the electron currents were measured. Electron current to the end flanges was observed only with the 1/4-inch anode. The flange potential was biased by connecting the flange to the anode through a resistor. Figure 14 is a plot of flange current vs. voltage.

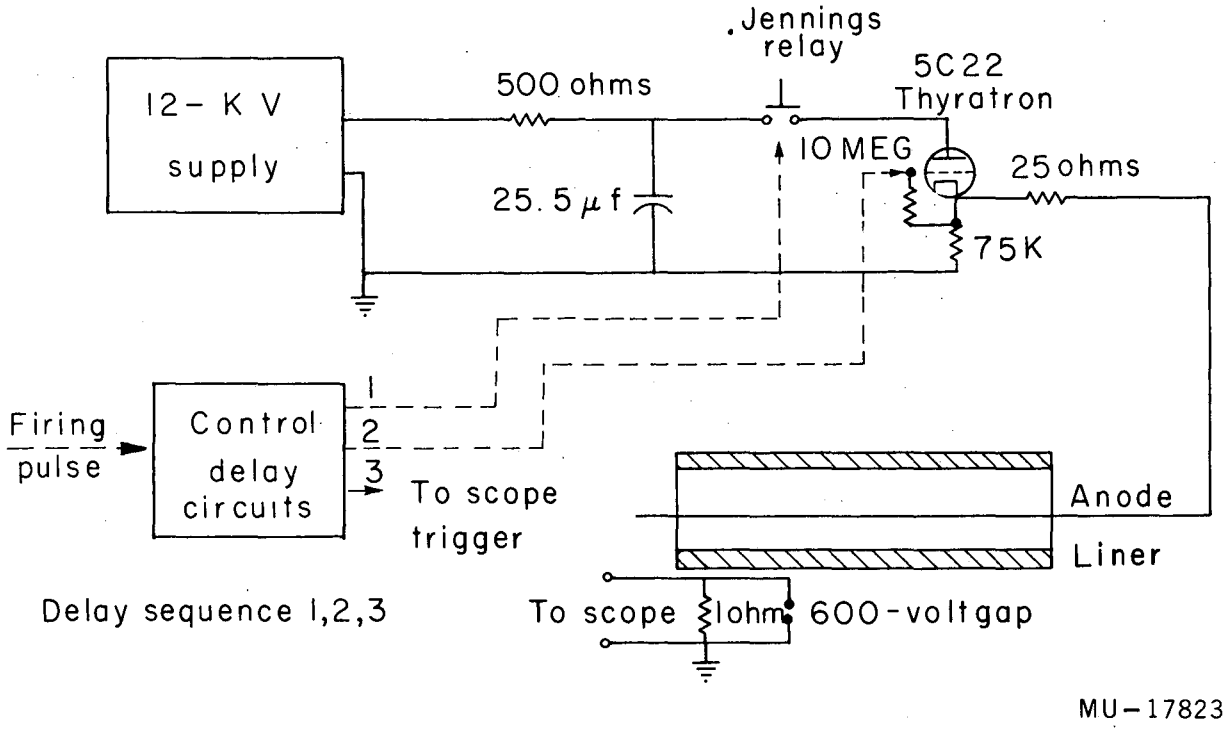

Fig. 11. Ion magnetron control and current monitor.

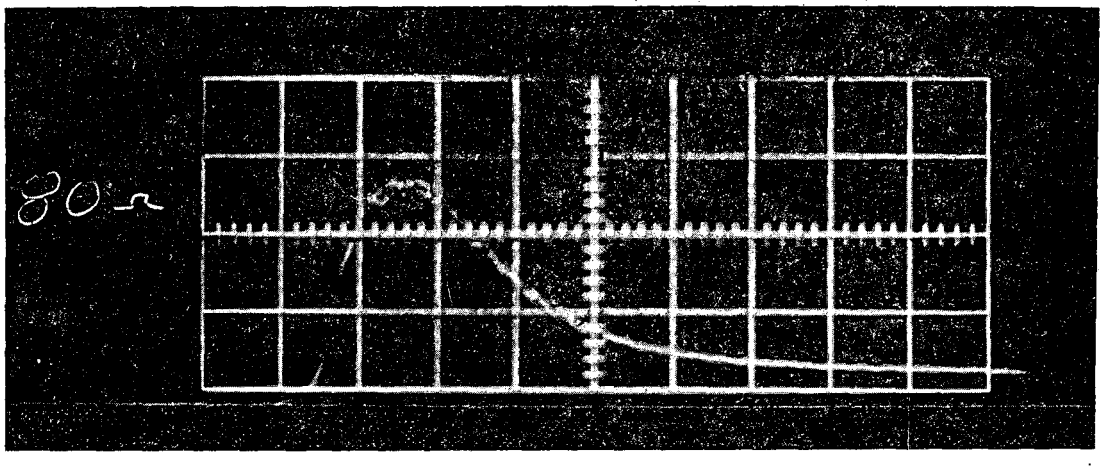

ZN-2197

Fig. 12. Oscilloscope trace showing initial current. Vertical displacement 20 amp/cm; horizontal, 200 μsec/cm; 12 kv, 2-in. anode, pressure = 0.64 μ.

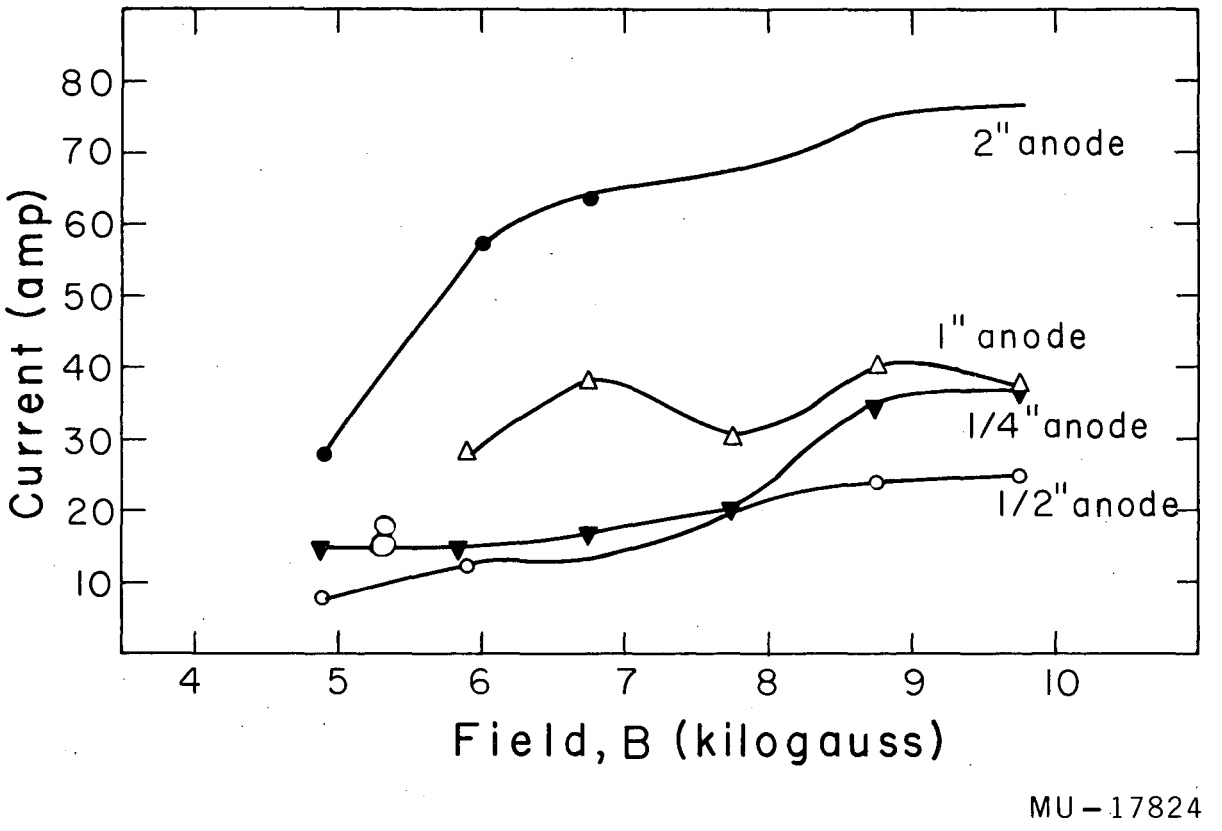

Fig. 13. Initial current vs H field; Hv = 12 kv, P = 0.7 μ, mirror ratio = 1.

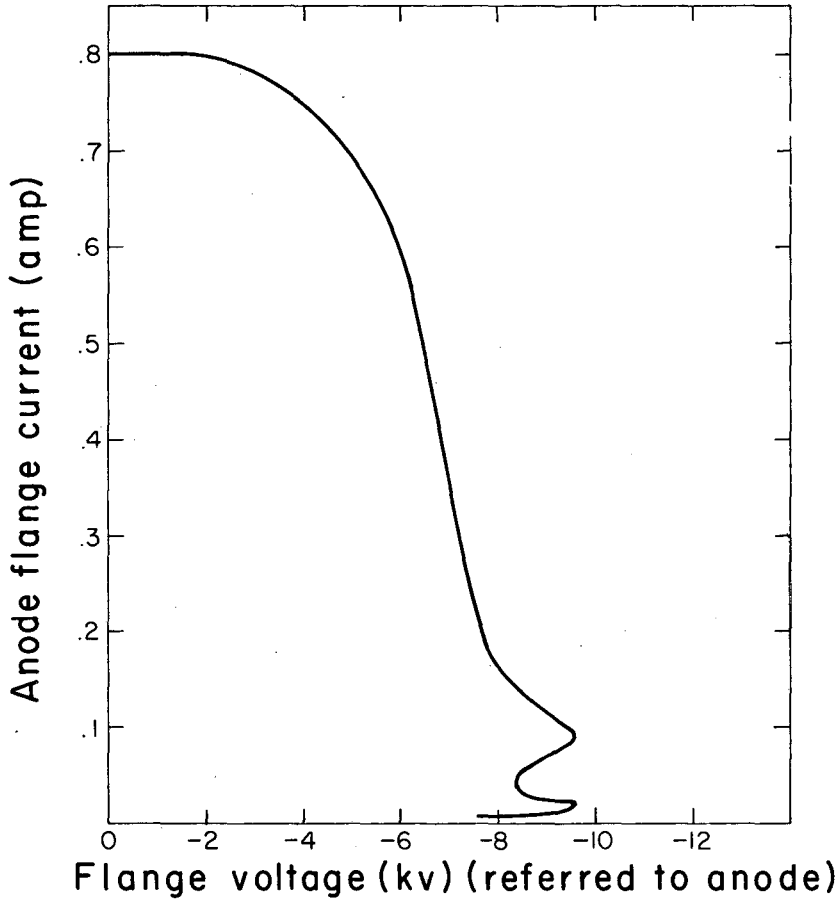
Anode flange current (amp)
.8
.7
.6
.5
.4
.3
.2
.1
0
-2
-4
-6
-8
-10
-12
Flange voltage (kv) (referred to anode)

MU-17821

On this plot the anode voltage is considered zero. With proper geometry and biasing with a power supply rather than self-biasing it will be possible to measure the sheath potential drop. With the larger anodes all H lines threading the sheath pass through the cathode; therefore no current to the end flanges is drawn.

To measure the sheath length the distance between the mirror peaks, or--for a mirror ratio of 1--the distance between the points where the field starts to diverge was decreased from 36 in. to 24 in. The initial ionization rates varied in approximately the same ratio as the two lengths (Fig. 15).

Conclusion

It is quite clear that the sheath is the major ionization mechanism. The number of neutrals striking per unit area per unit time is given by[2]

$$\eta = 3.5 \times 10^{22} \frac{P_{mm}}{\sqrt{MT}}$$

for $P = 7 \times 10^{-4}$, $T = 300$, and $M = 4.1$; $\eta = 7 \times 10^{17}$ molecules cm^{-2} sec^{-1}. If the sheath is 36 inches long, the area for a 1-in. anode is 700 cm^2. Therefore

$$I = \frac{7 \times 10^{17} \times 700}{6.5 \times 10^{18}} = 78 \text{ amp.}$$

Since the anode is in equilibrium with the gas, every neutral entering the sheath is either ionized or reflected back into the sheath from the anode to be ionized or passes through to the region from which it came. At around 9 kilogauss and 11 kv with the 1-in. anode the current is about 40 amp. From this one could conclude that the sheath is about 25 % efficient for ionization of a D_2 molecule in a single sheath transit at the noted operation conditions.

[2] S. Dushman, Scientific Foundations of Vacuum Technique (John Wiley and Sons, New York, 1955).

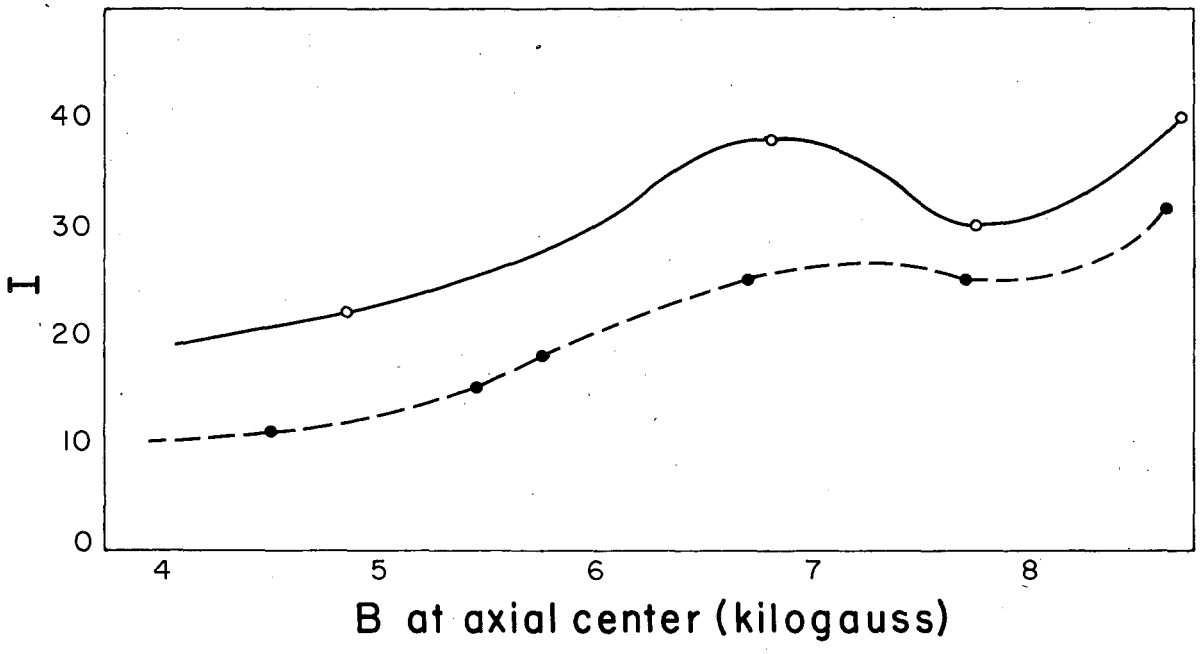

MU-17822

Fig. 15. Comparison of 36-in. and 24-in. mirror with flat field (ratio = 1) and 1-in.-diam. anode at 0.7 μ and 12 kv.
—— 36 in. peak to peak
--- 24 in. peak to peak

VII. THEORETICAL RESEARCH

TRANSPORT COEFFICIENTS

Allan N. Kaufman

The Chapman-Enskog method of deriving transport coefficients for a plasma of electrons and ions has been generalized to allow unequal temperatures for the two components. This generalization is achieved by expanding the Fokker-Planck collision terms in powers of the electron-ion mass ratio. To lowest order there is no energy transfer, but there is momentum transfer, so that resistivity occurs. The energy transfer appears in higher order, in the equation of state, with the Joule heating.

The complete set of macroscopic equations is being derived for the case of gradients transverse to a magnetic field. (Appreciable simplification has been achieved by analyzing each component's mean velocity into several parts, and by maintaining this separation.) It is found that the thermoelectric effect is due only to the electron temperature; mass diffusion (beyond that due to pressure gradient) results from an electron (but not ion) temperature gradient, while an electron (but not ion) heat flow is associated with the customary mass diffusion. A separate equation of state is obtained for each component: the ion temperature will tend to be uniform, because of the high ion thermal conductivity, while the low electron thermal conductivity will maintain appreciable electron temperature gradients.

The viscosity coefficients of the ion gas have been derived by three methods:

(a) An analysis of particle orbits leads to semiquantitative expressions, and to understanding of the microscopic processes involved.

(b) A simplified Boltzmann equation has been studied, whose second moments can be solved for exactly, for arbitrary $\omega \tau$ (ratio of gyrofrequency to collision frequency). The results, surprisingly, agree quantitatively with those of Chapman and Cowling.

(c) The correct Boltzmann equation, using the Boltzmann collision integral, has been solved (exactly) for the case $\omega \tau >> 1$. The results again agree with those of Chapman and Cowling, who use an orthogonal series approximation.

HYDROMAGNETIC STABILITY OF A DIFFUSE LINEAR PINCH

William A. Newcomb

The hydromagnetic energy principle is applied to the derivation of necessary and sufficient conditions for the hydromagnetic stability of a linear pinch with distributed plasma current (a diffuse linear pinch). The results are quite general in that the axial and azimuthal components of the magnetic field, which determine the structure of the pinch completely, are treated as arbitrary functions of distance from the axis. For purposes of illustration, the general results are applied to the limiting case of a pinch with the plasma current confined to an infinitely thin layer (a sharp pinch).

BOUNDARY-LAYER FORMATION IN THE PINCH

John Killeen

The study of boundary-layer formation in the pinch, which has been reported previously,[1] is being continued. An electric field is applied to a deuterium gas. The field equations and the equations of ionization and heating of the plasma[2] are solved numerically on the IBM 704.

Three new cases have been computed which show the dependence of plasma formation on gas density. The applied electric field was $E_0 = 1$ v/cm and the distance between the plasma boundary and the conducting shell was $a = 10$ cm. The three densities considered are $n_0 = 10^{13}/cm^3$, $n_0 = 10^{14}/cm^3$, and $n_0 = 10^{15} cm^3$. If we consider the ratio of field to pressure, E_0/p, where E_0 is in v/cm and p is mm of Hg, then these three cases give $E_0/p = 3000$, 300, and 30 respectively.

In the first case (low density) the time for complete ionization at the wall is 25 μsec. The current density at this time is such that a very sharply defined layer is formed. The half width is about 0.03 cm. The magnetic field at the boundary is 238 gauss. The hot ionized gas is consequently in a sharp sheath. The electron temperature at the wall is about 150 ev.

In the second case, the time for complete ionization at the wall is 50 μsec. The half width of the current layer is about 0.2 cm and the field at the wall is 363 gauss. The electron temperature at the wall is 16.2 ev.

In the third case (high density), at 100 μsec the ionization at the wall is about 30%. At this time a broad current distribution has formed (half width = 7.5 cm). The field at the wall is 450 gauss. The ionized gas extends about 17 cm from the wall, and the electron temperature is nearly constant over this range at about 2.7 ev. In this case the familiar sharp boundary layer has not been formed.

---

[1] Gordon Gibson and John Killeen, in Controlled Thermonuclear Research Quarterly Report, UCRL-8682, March 1959, p. 62.

[2] S. A. Colgate, Gordon Gibson, and John Killeen, Boundary-Layer Formation in the Pinch, [UCRL-5195(rev) Feb. 1959], Physics of Fluids (to be published).

A NEW PARTICLE-ORBIT CODE (SPIRAL)

John Killeen

A new IBM 704 code for the solution of the equations of motions of a charged particle in a cylindrically symmetric magnetic field has been completed. The equations solved are given in cylindrical coordinates. The magnetic field is specified by the θ component of the vector potential, $A_\theta(r, z)$. The field components are then $B_r(r, z)$ and $B_z(r, z)$. The analytical form of these functions can be quite arbitrary, taking the form of subroutines which must be prepared for specific applications. At present it is

$$A_\theta = B_0 \left[\frac{r}{2} + \frac{a}{k} \left\{ c_1 J_1(kr) + c_2 Y_1(kr) \right\} e^{-k\ell} \cosh kz \right] ,$$

which is a general cylindrically symmetric field in a region with current density equal to zero. This vector potential describes Astron or mirror-machine fields.

For such fields p_θ, the canonical angular momentum, is constant and is used in the code to replace the θ equation of motion.

The speed is also constant and is computed at each step of the integration as a check.

This code was prepared by Mr. Garrett Boer of the Computation Division.

VIII. BASIC EXPERIMENTAL RESEARCH

HOTHOUSE--HYDROMAGNETIC WAVE PROPAGATION

John M. Wilcox

Plasma Alfvén waves have been generated experimentally.[1] A wave is induced at one end of a cylindrical plasma, and the transmitted wave is detected at the other end. The hydromagnetic wave guide consists of a conducting cylinder, 34 in. long and 5-3/4 in. in diameter, filled with hydrogen gas to a pressure of 100 microns, and mounted in a uniform axial magnetic field (Fig. 16). At each end of the cylinder there is an insulator and a small coaxial electrode, 2 in. long and 2 in. in diameter. The velocity of propagation of these waves can be derived from the formula

$$v_A = \frac{c}{\sqrt{K}} ,$$

where K, the dielectric constant of a plasma, is equal to $1 + \frac{4\pi\rho c^2}{2}$, ρ is the plasma density, B the magnetic field, and c the velocity of light. Since K is much greater than 1, we have

$$v_A \simeq \frac{B}{(4\pi\rho)^{1/2}} , \qquad (1)$$

The tube is preionized by discharge of a "slow" condenser bank (45 μf) between the two central electrodes. This current reaches a maximum value of 50 kiloamperes in 17 μsec, and then "rings" a few times. A fast condenser bank (1.2 μf) is then discharged between one center electrode and the outer cylinder. This current reaches a maximum value of 25 ka in 0.7 μsec and also rings a few times. The radial electric field thus produced and the steady axial magnetic field generate a torsional hydromagnetic wave. When this wave arrives at the far end of the cylinder the radial electric field $\underset{\sim}{E}_r = \underset{\sim}{v}_\theta \times \underset{\sim}{B}_z$ produces a voltage difference between the center electrode and the outer cylinder. In Fig. 17A, the bottom trace of the dual-beam oscilloscope shows the driving wave form; the top trace is the transmitted wave form. The time scale is 1 μsec/cm. The transmission time of the wave is measured from the first peak of the driving wave form to the first peak of the transmitted wave form. From this transmission time and the known length of the cylinder we have a direct measurement of the wave velocity.

The operation of the measuring circuits can be checked by discharging the fast condenser bank when there is very slight ionization in the tube. In this case the transmitted wave arrives at the far end, as would be expected, with no measurable delay (Fig. 17G).

[1] Allen, Baker, Pyle, and Wilcox, Phys. Rev. Lett. 2, 383 (1959).

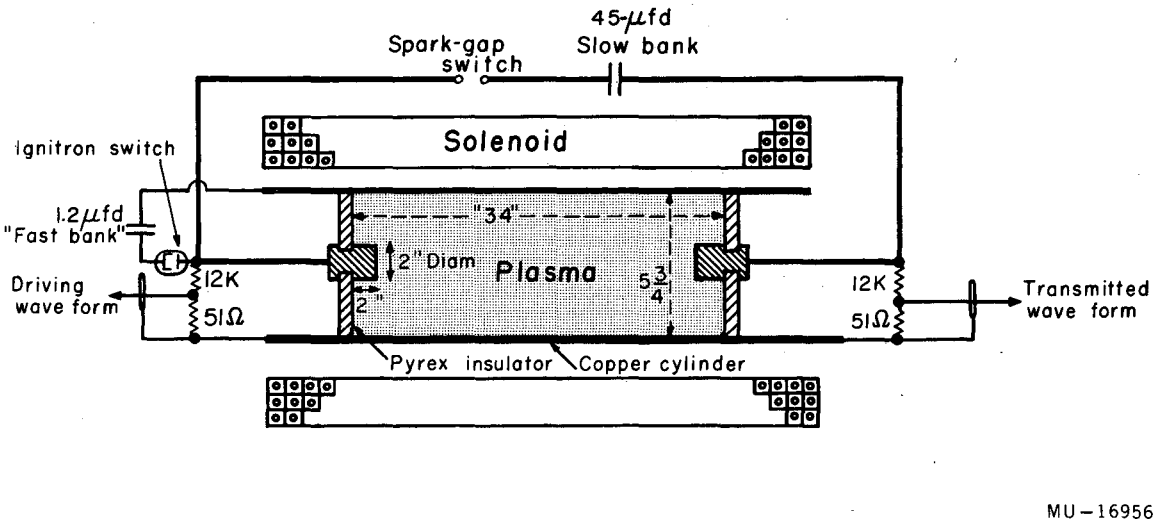

Fig. 16. Geometry of hydromagnetic wave guide.

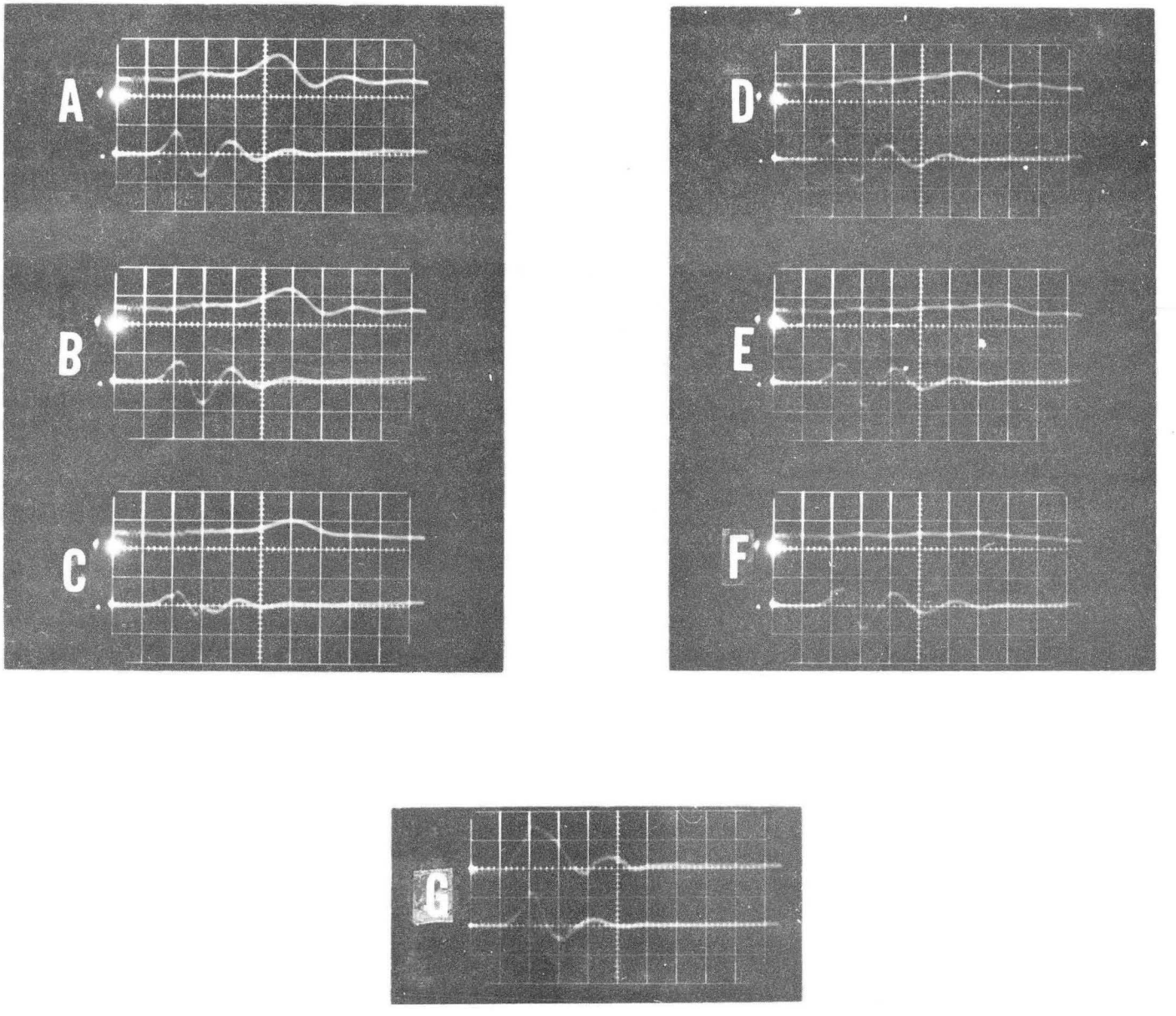

ZN-2198

Fig. 17. Dual-beam oscilloscope traces of the transmitted wave form (top) and the driving wave form (bottom). The time scale is 1 μsec/cm. The top voltage scale is 500 volts/cm, and the bottom is 2500 v/cm. The hydrogen gas pressure is 100 microns. The magnetic fields in pictures A through F are 9.0, 8.1, 7.2, 6.3, 5.4, and 4.5 kilogauss, respectively. Picture G shows the "prompt" transmission at low ion density.

The change in the transmitted wave form as the magnetic field is varied is shown in Fig. 17, A through F. The transmission improves with the larger magnetic fields. The experimental velocities are plotted versus magnetic field in Fig. 18, where the solid curve represents the theoretical value given by Eq. (1). One might expect the experimental velocities to be somewhat larger than the theoretical velocities, as follows. From the nature of the preionizing pulse we would expect the ionization to decrease at large radii. The wave velocity would then be a function of the radius. This would increase the average velocity, and also make the period of the transmitted wave form greater than that of the driving wave form, as observed in Fig. 17.

The measured velocity decreases as the gas pressure is increased, but the variation is not as large as predicted by Eq. (1). Since the energy from the preionizing condenser bank is approximately constant, the per cent ionization decreases at higher pressures and causes a deviation from the theoretical velocity. If the ionization parameters are not optimized, the measured velocity is larger than the Alfvén velocity, and in the limit of very low ionization the "prompt" transmitted pulse of Fig. 17G is observed.

At 12.6 kilogauss the peak of the driving wave form is about 1200 volts and the peak of the transmitted wave form is about 500 volts. This factor of 2.4 in the attenuation could result from several causes. The radially dependent wave velocity mentioned above can significantly decrease the transmitted wave peak. Sheath effects may cause only part of the driving voltage to be effective in actually driving the wave. Some of the wave energy may be lost to the insulators. Finally there is the attenuation of the wave in passing through the plasma.

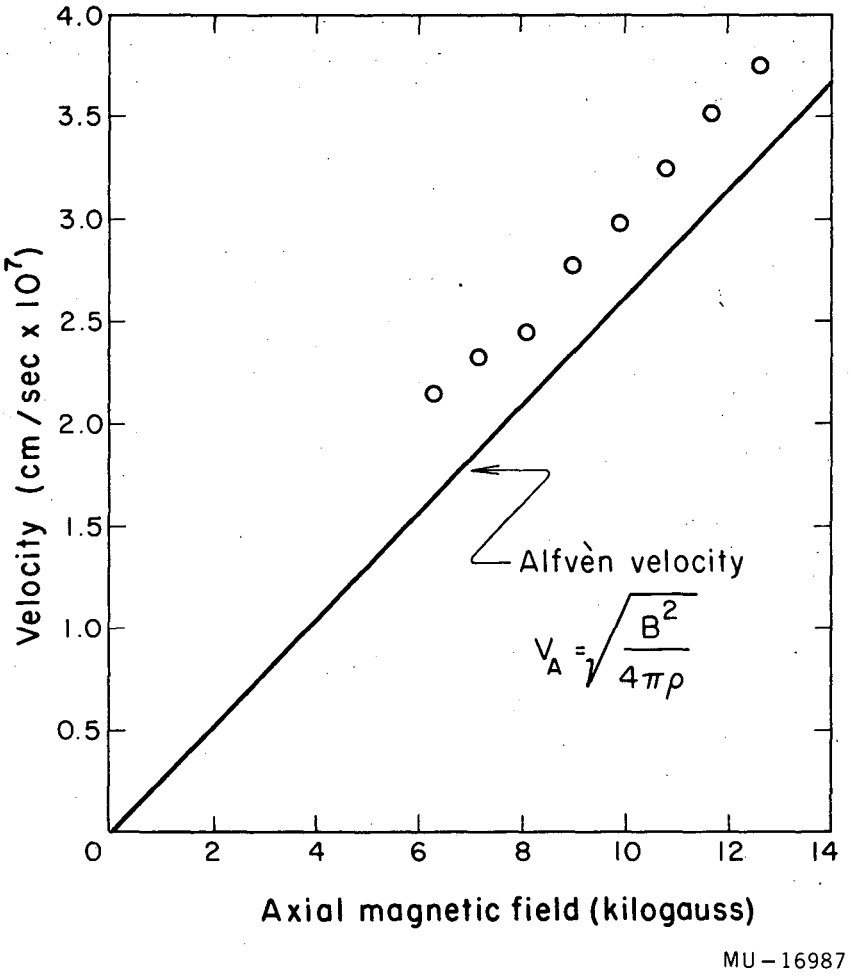

Fig. 18. Wave velocity vs magnetic field. The circles are experimental points and the solid curve is the Alfvén velocity (assuming that the 100μ of hydrogen gas is completely ionized).

ION CYCLOTRON RESONANCE HEATING

Edmund S. Chambers

Earlier experiments have shown[1] that a radio-frequency electric field, applied azimuthally or radially, can be used to heat a plasma confined by a static magnetic mirror. However, the conditions were such that charge exchange limited the ion energy to a few hundred electron volts.

During the period covered by this report an experiment employing an induced azimuthal electric field was run at a new (and lower) pressure of 2×10^{-6} mm Hg, at which charge exchange was not limiting. A thin deutero-polyethylene target covering a nuclear track plate was used to detect the 10-kev deuterons. That such deuterons are possible was indicated by a proton track density on the plate that was four times background. This was much smaller than the experiment was originally designed for. However, subsequent calculations indicated a very narrow resonance region because of axial and radial variations of the static magnetic field, thus the low yield is not unexpected. A geometry in which the static magnetic field is uniform in the heating region should give a much higher yield of high-energy ions.

An experimental program utilizing a radial radio-frequency electric field is now under way. Based on a modification proposed by H. P. Furth,[2] the design employs an Alfvén-type hydromagnetic whirl ring.[3] A hollow cylinder of plasma is formed by a reflec (PIG) discharge in a static magnetic mirror. At one end the radio-frequency radial electric field is applied between concentric electrodes just inside and outside the plasma. Theory indicates that the $E \times H$ drift motion imparted to the plasma should result in an Alfvén wave that propagates axially. If, along the axis, the static magnetic field decreases to that magnitude designated the ion cyclotron resonance point (ICR) for the frequency employed, the phase velocity of the wave will also decrease. This is analogous to the normal dispersion of an electromagnetic wave caused by the bound electrons of a dielectric. Also, similar to the absorption of an electromagnetic wave at the resonance frequency of bound electrons in the dielectric, the Alfvén waves will lose energy to ions of the plasma at the ICR point.

Experiments with a plasma density of roughly 10^{10} ions/cm^3 indicate that such waves do propagate as expected. When the static magnetic field was raised above the ICR point there was no longer a resonant sink, and the waves should have propagated to the far end of the machine. This was observed. A discontinuity in the rf potential of the plasma at the far end occurred at the ICR point. A well defined resonance point in the curve of the axial rf B field vs static magnetic field was observed at the center of the machine. However, a minimum was obtained instead of the expected maximum at the ICR point. When the rf field was applied the plasma became very diffuse

---

[1] E. S. Chambers, A. A. Garren, D. O. Kippenhan, W. A. S. Lamb, and R. J. Riddell, Jr., Cyclotron Resonance Heating of a Plasma in a Magnetic Mirror, UCRL-5286, June 1958.

[2] Harold P. Furth, Ion Cyclotron Waves in Mirror Geometry, UCRL-5423-T, Feb. 1959.

[3] H. Alfvén, Cosmical Electrodynamics (Clarendon Press, Oxford, 1953) p. 88.

in appearance. This may be explained by Alfvén's theory, which takes into account finite conductivity of the plasma. However, there was no measured rf energy input to the plasma.

To increase the plasma density to roughly 10^{13} ions/cm^3 the cold cathodes were replaced by self-heated cathodes. Now, instead of 10 ma, we can get discharge currents of several amperes. So far only one sector of the hollow cylindrical discharge is carrying most of the current. Radio-frequency power is now taken up by the plasma. The radial impedance is roughly 5 ohms, and this corresponds to a calculated hydromagnetic capacity[4] of 0.01 μf.

In preliminary experiments, the detector at the far end shows a gradual rise in response as the static magnetic field is increased. A maximum in the positive current to a probe situated at the center of the machine was observed at the ICR point when the static magnetic field was varied. These facts and other evidence may eventually confirm the existence of the waves and heating of the ions, as expected from theory. Experiments of this type are being continued.

[4] O. A. Anderson, W. Baker, A. Bratenahl, H. P. Furth, J. Ise, W. Kunkel and J. Stone, Study and Use of Rotating Plasma, UCRL-8067, March 1958.

MICROWAVE AND BEAM-INTERACTION STUDIES

Thomas K. Allen,* Milford C. Horton, G. A. Paulikas,
Robert V. Pyle, and Ferd Voelker

Survey experiments concerning the microwave probing of plasmas by transmission interferometry are continuing. Cutoff is easily achieved at a wave length of 1 cm with noble gases in a dc PIG discharge, and some of the problems of technique--such as the positioning of horns--are being investigated. Similar microwave apparatus to operate at a wave length of 8 mm is nearly complete. Density and temperature measurements by means of electrostatic probes are also in progress in PIG and arc discharges. Plasma electron oscillations are being studied in low-density plasmas with externally heated cathodes as the first stage in a program to investigate the properties of electron streams in plasmas. Apparatus suitable for wave-propagation and plasma-diffusion experiments is under construction.

DISSOCIATION OF D_2^+

Gordon Gibson, W. C. Jordan, Eugene J. Lauer, R. L. Leber,
C. H. Woods, and John R. Ullman

Because of the lack of information on the dissociation of D_2^+ in ionized deuterium an experiment is being designed to measure this effect relative to the ionization of neutral deuterium of the same velocity in identical environments. The method proposed is to observe the distribution in charge states of the particles emerging from a deuterium arc when the incident beam is (a) molecular deuterium ions and (b) neutral deuterium atoms. Means will be provided to switch rapidly between the two beams so that corresponding measurements can be obtained under identical arc conditions. The D_2^+ beam will be provided directly by the Cockcroft-Walton accelerator, whereas the neutral beam will be obtained by neutralization of a portion of the D_2^+ beam. The maximum energy of the incident beam will be 400 kev, determined by the operating limitations of the accelerator. Beam-deflecting and -analyzing equipment will be designed to permit operation up to this energy.

The major difficulties that can be foreseen in obtaining significant data are (a) minimizing the dissociation in the residual gases in and near the arc, and (b) producing sufficiently intense neutral beams. It is proposed to subtract the effects in the environment of the arc by passing the beams both through the arc and near it. However, it will still be necessary to design for low pressure in the region near the arc. The present concept is to utilize the pumping action of the arc by using a geometry similar to that employed by Foster,[1] and also to provide for auxiliary pumping in this region.

---

*Visiting Lawrence Radiation Laboratory from AERE, Harwell.

[1] John Stuart Foster, Some Measurements on a High-Vacuum High-Speed Ion Pump, (thesis) UCRL-2312, Aug. 1953.

Neutralization of the D_2^+ beam is to be accomplished by passing it through thin aluminum oxide foils and subsequently removing the charged fraction by means of a deflecting magnet. A series of experiments has been performed to determine the approximate limitations of aluminum oxide foils in the Cockcroft-Walton beam. Specifically, it has been found that foils of the order of 500 to 1000 angstroms thick (~ 1 in. in diameter) survive about 4 ma of 350-kev D_2^+ without noticeable damage. Larger currents destroyed the foils. Coating the foils with an evaporated aluminum layer to make them electrically conducting resulted in no great difference in the ability of the foil to survive; however, more secondary electrons were produced in this case.

Apparatus is being fabricated and assembled which will permit operation and study of the characteristics of the arc and further testing of the beam-analyzing and -detection concepts.

ATOMIC AND MOLECULAR BEAM RESEARCH

Gilbert O. Brink

Preliminary design studies have been completed and mechanical design has been started on a beam machine for cross-section measurements. Most of the drawings for the main vacuum system are finished and construction of this will start soon. It is hoped that the vacuum system will be ready for assembly sometime in August.

The machine will be of the crossed-beam type, in which a thermal-energy beam of neutral atoms is crossed with a high-energy ion beam. In order to discriminate against background gas and to improve the signal-to-noise ratio, the atomic beam will be mechanically chopped while the ion beam is run dc. This will allow the use of ac amplifiers and a phase-sensitive detector in the beam-detection system. A mass spectrometer will be incorporated so that different atomic species may be examined.

Which cross section is to be investigated first has not yet been definitely decided. One that is being considered is the cross section for ionization of hydrogen atoms by protons. This may be quite difficult because of possible confusion with the charge-exchange cross section. Some method must be devised to separate these two; the separation may be possible with coincidence techniques.

A small vacuum system will soon be set up to try out different oven geometries to see if varying the size and shape of the oven snout will give a sizable increase in the intensity of the beam. Since a beam for cross-section measurements does not have to be collision-free, it may be possible to increase the beam intensity by proper design of an oven snout.

IX. ENGINEERING AND TECHNOLOGICAL DEVELOPMENT

ULTRAHIGH-VACUUM DEVELOPMENT

Norman Milleron and Leonard Levenson

Of the three areas of investigation,

(a) "black hole" pumping and beam catching,

(b) clean pumping with diffusion pumps, and

(c) complementary vacuum techniques,

only (b) and (c) have been pursued experimentally this second quarter.

This decision was reached because investigation of areas (b) and (c) must support investigation of (a), and because many experiments of the (b) and (c) types require only periodic attention over long stretches of time once they are in operation. Accordingly, it was deemed expedient to apply all effort and test facilities toward establishing a firm start on areas (b) and (c). Some conjecturing about "black hole" pumping has been done and a few pertinent points follow.

Black Hole Pumping

Conjectures about black-hole pumping still revolve around the pumping potential offered by Penning-type (PIG) discharges sustained on condensible metal vapor. First, the parameters defining PIG discharges (in which only electrons are confined) scale up attractively as follows: the magnetic field strength, as an unknown function of $H\rho$ for the electrons, decreases with increasing 1949-type PIG diameter. The scaling laws for large-diameter low-density PIGs as a function of H, E, pressure, length, and diameter are not known, but in 1956 Milleron sustained a 1949-type PIG with 11-1/4-in.-diameter cathodes on silver vapor at ~ 1μ equivalent pressure by using 4 kv applied voltage and a 150- to 200-gauss field.[1]

Assuming that a PIG discharge supported on metal vapor scales up attractively, one can list possible uses as follows:

1. Cool thermalized gas might be efficiently pumped.

2. A PIG might be used to pass high-velocity particles while pumping slow particles. It is suggested that perhaps two such discharges might help to satisfy both aspects of the gas-handling problem that is presented by injection schemes involving high flux densities of energetic neutral particles. These two PIG discharges might provide "curtains" across entrance and exit holes communicating with a mirror chamber. On the entrance side, the beam would pass unimpeded through a PIG curtain, but all the slow

[1] Norman Milleron, in Arc Research Progress Report, Mirror-Machine Program, UCRL-4795, Oct. 1956.

particles would react in the PIG. On the exit side, the beam might pass through another PIG curtain and impinge on a liquid metal target at grazing incidence.

In lieu of some conclusive facts (which will be obtained with a mass spectrometer) regarding black-hole pumping with evaporated coatings, consider the following opinions:

During the evaporation process, re-emission of hydrogen gas already captured by an evaporated coating can occur. At pressures $< 10^{-8}$ mm Hg of hydrogen, this rate of re-emission of hydrogen will (as a consequence of dynamic processes during the production of the evaporated coating) exceed the rate of concomitant gassing from the source of evaporating molybdenum, provided that the molybdenum has been given adequate prior treatment. Not only will re-emission then become dominant, but an equilibrium between the re-emission rate of hydrogen and the capture rate of hydrogen by the coating being deposited will be established at a pressure of $\sim 10^{-8}$ mm Hg.

On the basis of the foregoing opinion, work might well proceed on evaluation of gas re-emission from coatings rather than on sources of evaporation alone.

If the thermal bond between the evaporated coating the wall is the primary problem, the wall temperature could be lowered, thus improving the heat transfer by radiation from the coating to the wall. Also, the thermal bond between the wall and the coating might be improved by depositing the coating on an intermediate mobile material of low vapor pressure and low melting point. At room temperature, the mobility of indium, for example, is great enough so that a substrate of indium might "swallow" the coating particles. Thereby an improvement of the thermal conductivity of the coating might be achieved for a time.

Clean Pumping with Diffusion Pumps and Traps

Proposed Technique for Increasing Pumping Speed of Large Diffusion Pumps

Standard commercial diffusion pumps are usually provided in the form of a jet assembly of several stages placed in a straight cylindrical barrel. This type of diffusion pump is a general-purpose pump that can be used without modification for many vacuum systems. When, however, it is necessary to optimize a pumping system (which may be composed of a valve, trap, baffle, and pump) so that the largest available orifice to the pumped system can be used to the most advantage, then it may be necessary to modify the commercial diffusion pump so that it meets the requirements of the system. In order to make available a diffusion pump which has a maximum pumping speed greater than that of commercially made diffusion pumps of the 32-in. size, it is proposed that the bore of a 32-in. pump barrel be widened above the highest point of impingement of the top vapor jet on the pump wall. This arrangement would increase the conductance to the top jet of the pump and should thereby increase the maximum pumping speed over that which can be produced by the unaltered commercial pump.

An extension of this technique of increasing the pumping speed would be to entirely remove the pump barrel above the impingement point of the top vapor jet. The pump flange could be rewelded to the shortened pump barrel and the top jet cap would then project above the pump body. If appreciable backstreaming of the pump fluid vapor could be prevented by a water-cooled shield over the top jet cap, then the top jet cap could be projected up into a trap of the angle type. This configuration should appreciably increase the pumping speed of a pump-baffle-trap system above the maximum pumping speeds now available with such systems.

Large Diffusion Pump Test System

At the writing of this report, the forevacuum piping and water-system plumbing for a 10-in. and a 32-in. NRC diffusion-pump system are being welded into place. This system, expected to be operational in 2 weeks' time, will be used to obtain test data on several oil-baffle and trap configurations already designed and under construction. Preliminary tests will be run on the efficiency of a water-cooled cover for the top jet caps of the 10-in. and 32-in. pumps. It is expected that such water-cooled covers for the top jet caps will keep the oil-backstreaming rate down to a rate equal to room-temperature oil evaporation from an area equal to the cross-sectional area of the diffusion pump.[2] Once an efficient oil-baffling technique has been empirically worked out, the diffusion pumps will be used to test the trapping efficiencies of angle traps (described in the next section) and other trap configurations.

Angle Trap for Oil Diffusion Pumps

Experiments have been designed to test the oil-trapping efficiency of a right-angle-bend trap configuration using various trapping materials. It is possible that the conductance of a trapping geometry in the form of a right-angle bend is higher than for any other trapping configuration with the same trapping efficiency. Whether or not this is so will be determined by conductance experiments described below.

Several types of trapping surfaces will be tried with an angle trap for the 10-in. NRC oil diffusion pump. These surfaces will include liquid-nitrogen-cooled surfaces, and surfaces covered with artificial zeolite beads, activated alumina beads, and flame-sprayed alumina.[3]

The angle trap (see Fig. 19) designed for liquid nitrogen cooling can also be used for the beaded-surface tests with the use of stainless steel wire mesh to hold the beads against the trap wall. For some tests the wire mesh itself can be coated with adsorbing material by flame spraying in order to determine if the trapping efficiency is affected by oil vapor entering the ultrahigh-vacuum system via evaporation from the wire mesh.

---

[2] Private communication from C. F. Normand, ORNL, on tentative results of backstreaming experiments using cooled jet cap covers.

[3] The use of artificial zeolite and alumina trapping surfaces is due to experimental results obtained by the Westinghouse Research Laboratories.

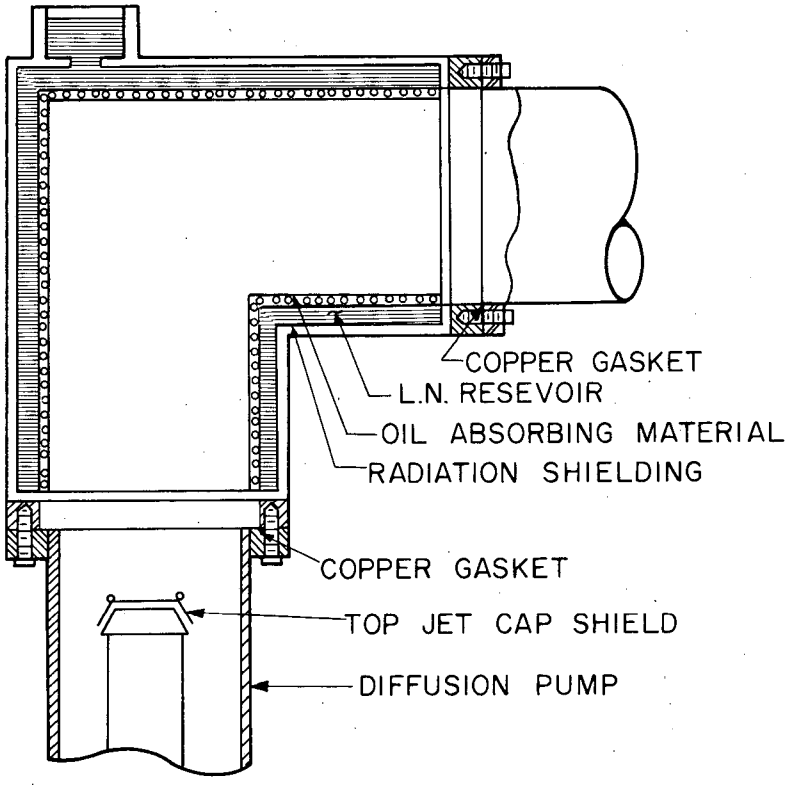

SCHEMATIC OF EXPERIMENTAL
ELBOW TRAP FOR 10" NRC PUMP
USING L.N. AND/OR ARTIFICIAL ZEOLITE
TRAPPING SURFACES

MU-17827

Fig. 19. Schematic of experimental elbow trap for 10-inch NRC pump using liquid nitrogen and (or) artificial zeolite trapping sources.

Another right-angle trap will be used primarily for experiments with materials flame-sprayed directly onto the trap walls. The effectiveness of the flame-sprayed coatings will be determined as a function of the coating material and its thickness and density.

The angle traps to be used for the experiments described above have been designed and are being constructed.

An improvised 4-in.-diameter angle trap whose interior walls are lined with 1/8-in. pellets of Linde 13x artificial zeolite molecular sieve material held on the walls by bare No. 10 mesh stainless steel screen is under test. This angle trap is blanked off by a blind flange similarly covered with pellets which has an ionization gauge opening in its center. A shutter has been arranged so that the entrance to the ionization-gauge tube can be prevented from seeing those walls of the trap which are opposite to it. The shutter itself consists of zeolite pellets contained by stainless steel mesh. The purpose of the shutter is to determine whether or not there is a contribution to the measured pressure by gas from the wall materials or oil evaporated from the wire mesh. If the indicated pressure increases when the shutter is closed then it can be assumed that the base pressure is limited by gas originating in the pellets. On the other hand, if the measured pressure decreases when the shutter is closed, then it can be assumed that oil vapor is condensing on the wire mesh and then evaporating again, so that oil migration takes place via the wire mesh. In one case there was still some condensable gas left in the pellets because the maximum temperature of the trap during the bakeout was less than 300° C. The vapor was detected by comparing the rate of rise of the untrapped foreline pressure to the rate of rise of the trapped foreline pressure. The untrapped pressure rate of rise was compatible with the pressure measured in the fine vacuum. The indicated pressure was 6.6×10^{-8} mm Hg with the shutter open and 6.8×10^{-8} mm Hg with the shutter closed. Since these pressure measurements were reproducible with the shutter opened and closed, the pressure difference measured was believed to be a real difference. The condensable gas still left in the zeolite pellets was probably the cause of this effect. Unfortunately no conclusive data on the base pressure obtainable with this trap has been obtained. What is known from these tests is that the artificial zeolite pellets have withstood several bakeouts at 400°C and a bakeout at 500°C without any noticeable signs of deterioration or discoloration.

Conductivity Measurements

In order to determine experimentally the criteria which obtain in the design of traps, baffles, and other geometries used in vacuum systems, an attempt is being continued to measure the conductivities of several trap configurations. When the absolute conductivities of several basic geometries have been measured, these conductivities will be compared with calculated conductivities. Calculations of the conductivity of the angle trap configuration are being done by Donald Davis of the Theoretical Group. In this way, some progress toward a reliable method of calculating the conductivities of various complicated traps and baffles may be made.

Complementary Techniques

Determination of Comparative Leak-Detector Sensitivities

A study of comparative sensitivities of helium leak detectors, CVC model 24-110 and VEECO model 9MS-AB, was initiated. The two He detectors were connected together, comprising a sealed vacuum system at a constant uniform pressure of 0.2 μ. The partial pressure of helium was carefully increased in this system and the relative detection of helium by the two instruments was observed simultaneously and continuously.

Results were as follows: The VEECO instrument detected ~ 1/10 the partial pressure of He that the CVC instrument could "see." However, after the helium partial pressure had been raised so that full-scale readings of the instruments were observed, the irreducible background of He accumulated in the VEECO instrument offset its initially greater sensitivity. That is, the background of helium in the VEECO did not clean up to the lowest values possible. Because of the small residual helium response in the VEECO after saturation, the VEECO instrument's effective sensitivity was reduced almost to that of the CVC instrument. The source of the residual helium response in the VEECO is now being investigated. On the basis of work by Waters at Westinghouse, it seems probable that this low level of helium background may be due to re-emission of helium initially driven into surfaces as ions. The PIG gauge as well as the ion-collector surfaces are suspected in this regard.

Titanium-Evaporator Pump

A small electron-bombardment type of titanium-evaporator pump was constructed for the conductivity measurements described above. This device is identical in design to one built in 1957. Evaporation rates of 12 milligrams per minute were obtained with this device, which is worth describing because of its simplicity. The device consists of a diode geometry without a feeder. A charge of ~ 5 g of titanium is supported on a 1/16-in.-thick water-cooled copper anode. A U-shaped filament, 1/2 in. wide, of 0.030-in. tungsten wire is suspended 1/2 in. above the anode. The molten lump of titanium is supported by the water-cooled copper anode while being bombarded by a stream of electrons which delivers up to 1000 watts to the titanium.

Gaskets

Work is being continued on the techniques of chemical milling of copper "bead" gaskets. It has been found that the bead gasket of the type reported earlier[3] in UCRL-5259 can be fabricated with the use of Kodak Photoresist as the masking material for the chemical milling process. The Photoresist can be applied with an ordinary bow drawing pen, then exposed to daylight (not direct sunlight) and developed either in a vapor degreaser or in Kodak Photoresist Developer. The etching of the copper can be done in HNO_3, the

[3] Norman Milleron, Some Component Designs Permitting Ultrahigh Vacuum with Large Oil Diffusion Pumps, UCRL-5259, Dec. 1958.

concentration of which depends upon the etching speed desired. It has been found that 15 oz of 70% HNO_3 in 32 oz of water will mill a ridge 0.005 in. high in approximately 13 minutes. However, slower milling rates are probably preferable in order to avoid roughness of the finished bead. It is expected that copper "bead" gaskets up to 36 in. in diameter will be produced in the next few weeks. Some gaskets that can be used to seal square or rectangular openings will also be made.

Valves

A program to develop large bakable valves is being continued. Following the ideas on bakable valves presented in the preceding quarterly report, a test was carried out on the feasibility of using a flattened tube as a hydraulically actuated expansible device to create the large unit loads required to obtain a high vacuum seal. A 3/4-in.-diameter tube of type 304 stainless steel 50 in. long and with a 0.030-in.-wall thickness was flattened into an approximately elliptical cross section for 28 in. along the length of the tube. The minor diameter of the ellipse was approximately 5/16 in. The flattened section was in the center of the tube so that end effects could be avoided. One end of the tube was sealed and the other end was connected to an oil hydraulic pump. The flattened central section of the tube was contained in a frame equipped with a flat phosphor bronze spring which acted to return the tube to its original diameter when the hydraulic pressure was removed. The frame restricted the expansion of the minor axis to 0.025 in. Hydraulic pressure was periodically applied to the tube by the pump so that the tube inflated, deformed the spring, and finally forced the spring against the frame. The tube was inflated in the frame by a hydraulic pressure of 3000 psi and returned to its original shape by the spring 937 times before the tube failed. The time between cycles was approximately 1 minute, in order to prevent mechanical heating of the tube.

In spite of the encouraging results obtained from the fatigue tests with the flattened tube, it was felt that the flattened tube might not be adaptable for use in a circular configuration. Accordingly, a similar high-pressure actuator was designed that might give the desired results. This actuator consists of two thin flat rings of sheet Inconel placed flat against each other and welded together along their inside and outside edges. This type of bellows can be pressurized via a small stainless steel tube soldered into one of the Inconel sheets between the inside and outside edges of the bellows. Tests on the expansion limits, pressure requirements, and fatigue life of this type of bellows under bakeout conditions will be carried out in the next several weeks. A dummy valve body which is designed to test various bellows types and sealing methods under bakeout conditions has been designed and built.

LIQUID HELIUM EXPERIMENT

Gordon Gibson, Eugene J. Lauer, and John R. Ullman

Description

An experiment has been devised to study the pumping speed for neutrals by low-temperature low-pressure absorption. Activated charcoal and the zeolites are among the materials considered as absorbents, since they present large surface areas. These materials would be cooled to near liquid helium temperature to provide long sticking times.

Figure 20 shows a schematic arrangement of the apparatus. In operation, the gas to be pumped is metered into the system through the inlet end of the 1-in.-diameter 20-in.-long trap collimating tube. Diffusing down the tube, the gas experiences a falling pressure. The gas input is known and one can determine (a) the amount of gas pumped per unit time, (b) the life of the trap, and (c) its efficiency compared with the case for an ideal trap, i.e., one on which absorbed particles would stick for an infinitely long time. From the geometry of Fig. 20 it is estimated that in the ideal case of an infinite sticking time, the pressure at Ion Gauge 3 would be about 1/6000 of that at IG 2 when gas is streaming in at a steady rate.

Present Status

The apparatus has been assembled in Bldg. 153, the system baked, and the ionization gauges checked against a McLeod gauge. The system has inadvertently been let up to high pressure several times, and an attempt is being made to outgas the system and the activated charcoal without resorting to a full-scale system bakeout. A suitable system pressure should be attained within a month and the initial run started.

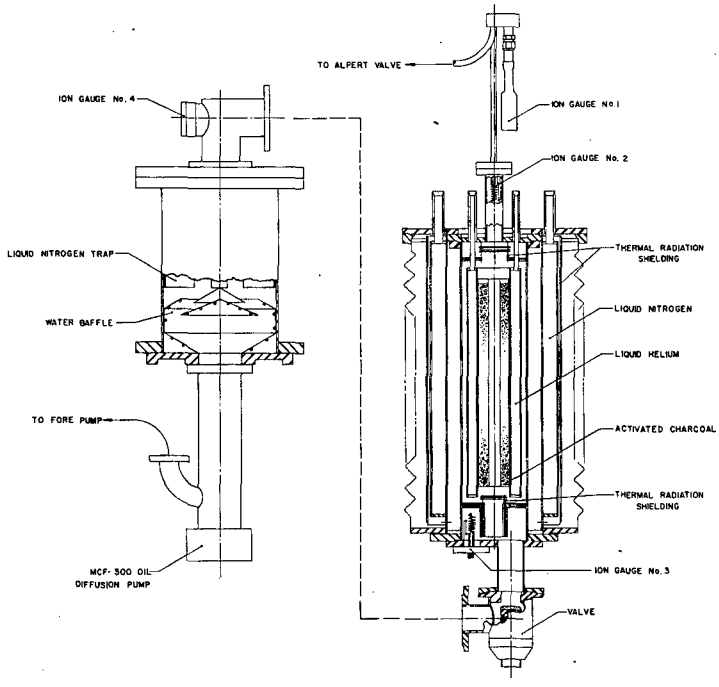

MU-17885

Fig. 20. Arrangement of vacuum system.

MECHANICAL ENGINEERING DEVELOPMENT

Thomas H. Batzer

Beta-Ray Experiment

John R. Ullman

Initial pumping-speed tests on the separately assembled 32-in. stainless steel pumping set indicates that one can attain 5000 liters per second at 2×10^{-5} mm of Hg, pumping neon.

A temperature survey on the liquid nitrogen baffle over this diffusion pump showed variations no greater than 5° C above liquid nitrogen temperature.

Experimental work on the fast-filling phase of the beta-ray experiment has been concluded. The 32-in. pumping set was installed for the fast-emptying phase of the experiment. The measured pumpdown (e-folding time) was 0.25 sec, higher by a factor of 2 than the theoretical time for the connected 500-liter vacuum vessel.

The quick-opening valve functions properly. The "closed" conductance is estimated to be less than 0.1 micron liter per second, adequately low for the experiment.

Liquid Helium Pumping Experiment

John R. Ullman

The liquid nitrogen and liquid helium stages of the experiment have been assembled. The activated charcoal was installed within the liquid helium stage and the system pumped down. Leaks during and subsequent to the system bakeout are gradually being overcome. Both trap stages are chilled to liquid nitrogen temperature and the hydrogen-leak line is being installed. During a run when the charcoal trap is being cooled with liquid helium, we plan to return the exhaust helium into a gas holder and compress it into bottles ready for reliquifying.

Source Test Vacuum System

John R. Ullman

The apparatus to check the performance of the two MCF 1400 oil diffusion pumps scheduled for use in this vacuum system has been assembled. Test data for the pumps without the KF 600 booster installed between the diffusion pump and mechanical vacuum pump have been obtained but not reduced. The apparatus is being set up to obtain performance data with the KF 600 booster installed.

Most of the parts for the vacuum system proper are on hand. One complete 10-in. pumping set will be performance tested. Data obtained will be compared with the system design.

D_2^+ Analyzer

John R. Ullman

An experiment has been set up that will permit breakup and analysis of a D_2^+ beam (on thin films), using the Cockcroft-Walton accelerator. The vacuum system and movable Faraday-cup components of the analyzer have been designed and are being fabricated. One set of coils producing a field of approximately 1000 gauss is on hand. Another set of coils giving a central field of 5000 gauss has been designed and is being fabricated.

Concurrently with the above, a second system is being fabricated and assembled. The object is to build an apparatus to produce a deuterium arc similar to the PIG reflux type of John Foster's. A thin central chamber (thin for minimum field perturbation) connects two 4-in.-diameter stainless steel arc tubes. Flanges on the central chamber match the Cockcroft-Walton beam tubes. The water-cooled assembly is 52 in. long. A 6-in. vacuum pumping unit is mounted on a common support stand. The two 5000-gauss solenoid coils noted above furnish the confining field.

One-by-Four-Foot Ceramic Torus

Raymond E. Keyes

Work on this torus has been stopped at Coors in Golden, Colorado. Coors has been having difficulty in joining the sections with solder glass, as they crack whenever the item is moved. They have been requested to ship the item as is.

Hard-Core Pinch

Raymond E. Keyes

Job orders have been written for the shell, liner, and hard core, and the bids are out. Three bids have come back on the liner--one a qualified bid--varying from $6,000 to $30,000. Not all bids are in. For the 12×48-in. corrugated toroidal liner the allowable wall thickness, for experimental reasons, is 0.010 in. or less. This makes it very difficult to fabricate without extensive tooling.

In order to obtain some understanding of the problem of restraint, and of the forces involved during bakeout, we have made a linear corrugated section of 0.010-in.-thick 304 stainless steel and have had it tested under compression. Two tests were made and a third is planned. Coatings of two to three corrugations with brittle lacquer seems to be the most useful test.

If the lacquer is applied uniformly the results of the compression tests can be quantitative as well as qualitative. These tests have taught us something of the mode of collapse and the load-deformation behavior of these corrugated cylinders.

Vacuum Development

Raymond E. Keyes

A system for checking baffle configurations for conductance and effectiveness has been laid out. The apparatus will enable us to arrange several different baffle configurations in a vacuum system and rotate them in position for test under similar conditions. Instrumentation to detect the amount of oil back streaming is being developed by the vacuum physicists and will be incorporated in the design as soon as available.

An apparatus to test a sealing scheme with a large bakable all-metal valve (suggested by L. Levenson) has been designed and is out for fabrication. The seal is formed by a stainless steel knife edge pressed into a copper gasket. The actuating force comes from a pressurized bellows incorporated within the valve. A muffle has been designed to fit this apparatus for test under bakeout conditions.

A large liquid-nitrogen-cooled elbow-type baffle has been designed and is in fabrication. The vacuum laboratory will make tests on this baffle, using bare liquid-nitrogen-cooled walls and walls with various oxide coatings. (Designed and being fabricated is a muffle that will permit bakeout of this baffle.)

Unipolar Generator Output Switch

Raymond E. Keyes

A low-voltage high-current-output switch for use with the Unipolar Generator has been designed. The switch will be air-driven, with spring-loaded roller contacts. Two sets of test rollers were fabricated and given a load-current-resistance test. One set was of copper and the other of steel. This test determined the feasibility of the contact surfaces and the single-unit roller-switch design was completed. The unit is now on order and will be used to check the roller-switch principle.

Toy Top

Joseph C. Behne, John R. Benapfl, and James F. Ryan, Jr.

A new access port has been designed for insertion in the 18-in. glass section. It will be used for diagnostics devices such as probes and baffles. A modified, occluded-gas source has been designed to go into the source-test stand. The source is unique in that it has an adjustable head which can be rotated 180 degrees. This is accomplished through miter gears. Also,

the configuration of the stack is completely open, thus eliminating the glass insulator between the stack and the outside metal tube.

All the parts for the 180-degree analyzer are on hand except some insulators from Fisher and Porter. The main parts were built by Humble Instrument Company. The magnet for the analyzer has not been thoroughly tested to date, but data obtained show it to be well within specifications. Another electromagnet with water-cooled coils having specificifications of 1000 gauss in a 7-in. adjustable gap is about 50% complete in the design stage.

The proposed design for a titanium getter for Toy Top has been completed. The getter will consist of a 4-ft-long 0.090-in. -diameter tungsten rod wound with two layers of 0.020-in. diameter titanium wire. This filament will be mounted in a horizontal position and will be supported by water-cooled terminals at each end and by ceramic standoffs at 6-in. intervals between the ends. Eight to ten of these getters will be installed through the source end flange of Toy Top. It will be possible to use the getters either singly or in groups.

A new water-cooled stainless steel source end vacuum vessel will be required to house this getter assembly. A prototype of a titanium getter has been built and it will be tested in a special tank which will be pumped by an existing 6-in. diffusion-pump system.

Design of the new wooden structure for Toy Top is complete.

A bakable 10-in. vacuum system is being designed. It will consist of a 10-in. diffusion pump, 20-in. -diameter 90-degree elbow with a double chevron liquid nitrogen trap, and a bakable valve. Copper pinch gaskets will be used throughout except for one O ring on the diffusion-pump flange. The system will be baked out with a resistance-heated muffle.

The design of a fast air-operated vacuum shutter for use with a vacuum ultraviolet spectrograph is in progress. Moving parts will be made of reinforced plastic. A speed of 1.5 in. per msec is expected.

Low-Energy Neutral Beam Experiment

William S. Neef, Jr., and James F. Ryan, Jr.

A fairly firm layout has been made (Fig. 21) and the design of the principal elements is in progress.

The design status of the major components indicated in Fig. 21 is as follows:

Titanium Evaporators. The tanks and flanges for the four titanium evaporators have been designed and are in fabrication.

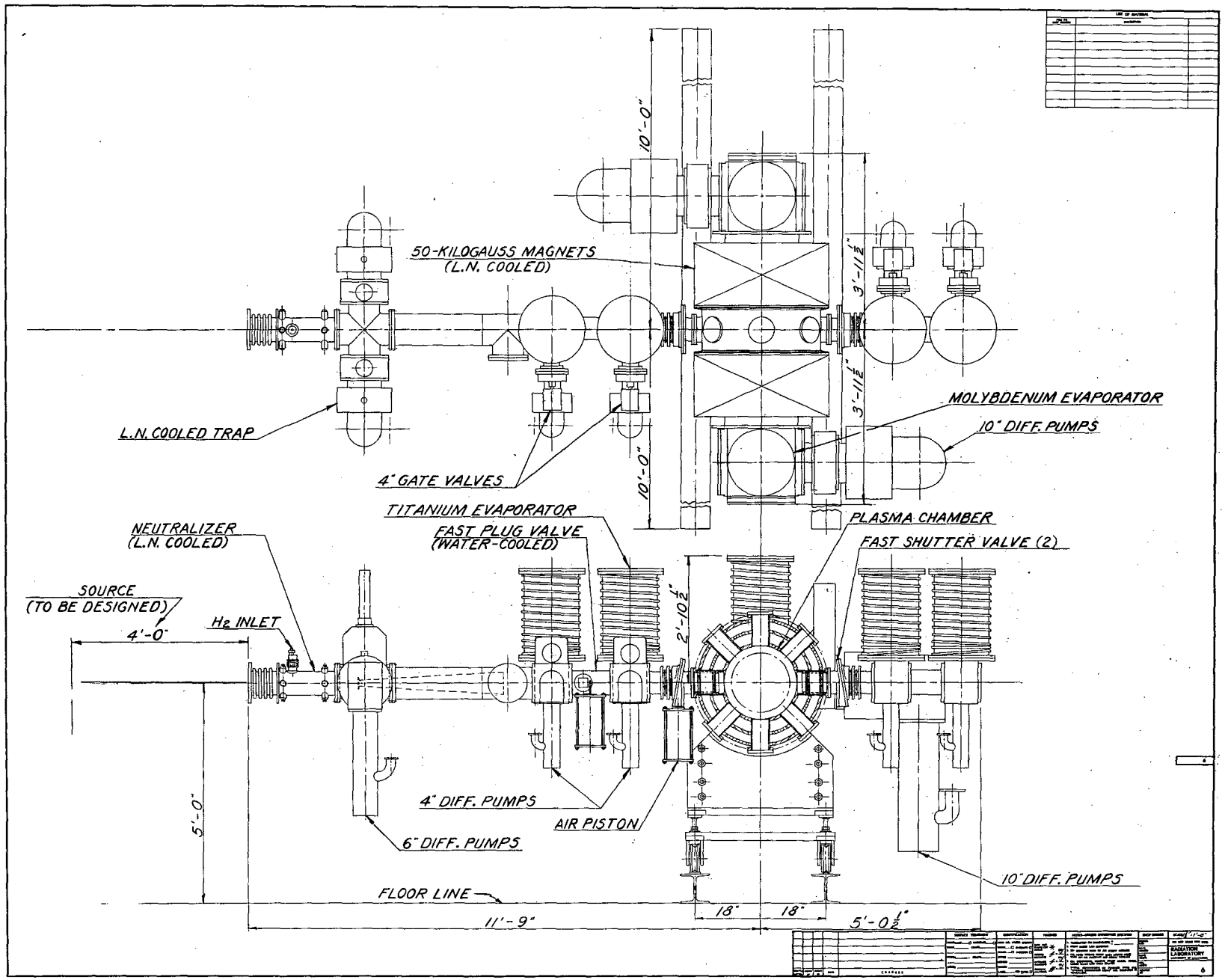

MU-17977

Fig. 21. Layout for low-energy neutral beam experiment.

Beam Neutralizer. The design of the beam neutralizer is completed, and the liquid-nitrogen-cooled channel has been released to the shops. An alternative to the above low-pressure hydrogen neutralizer is the H_2 jet. About 95% of the equipment, including the jets and vacuum system, is on hand and assembly has been started.

Plasma Chamber. The general layout is complete, and some of the construction details have been decided. The attractive loads of the magnets have been supplied by the Electronics Engineers and have been considered in the design of the Chamber. The calculated axial loads due to the magnets is 615,000 pounds.

Cooled-Target Valve. The layout is complete and design details are in progress.

Very Fast Valve. The design is about 90% complete. Calculated opening time is about 1.6 msec for the 1-1/2-inch opening. Most of the air driver parts are the same as for the cooled-target valve.

Ion Source. A prototype of the source (not shown in Fig. 21) has been designed and fabricated. A record is being kept of the experimental changes and new details have been drawn of various electrodes. A movable target for beam surveys has been laid out and is being detailed.

Mirror Magnets. In order to obtain the necessary data to design the 50,000-gauss mirror coils required for this machine, an experiment was set up to cool magnet coils with liquid nitrogen. A 9-in. modular magnet coil was successfully refrigerated to -320°F by pumping liquid nitrogen through the hollow copper conductor. The coil was pulsed at various current levels and pulse lengths. Maximum field strength attained was approximately 20,000 gauss. Temperature, pressure and flow were recorded along with voltage and current. Analysis of the data is in progress.

Subcooling of the nitrogen with a mechanical vacuum pump was also accomplished to within 1° F of its freezing point. Coil resistance was further reduced by using the subcooled fluid, but some heat was picked up from the helium gas used to pressurize the Dewar to attain pump priming. The gain realized by subcooling was small, but indicated that no serious difficulty would be encountered in such operating technique.

The coil design based on the cooling data, available power supplies, and safety considerations has been completed. The coil will operate at 12,000 amp and 196 v. Each coil requires 10,180 ft of 0.340-in. square hollow copper conductor and will weigh 3,460 lb. Coil temperature rise is expected to be less than 15°C during the required machine pulse. Liquid nitrogen cooling will be employed.

Several design layouts of the reaction chamber and coil assembly for the machine have been made. Design details are being worked out. It is felt that support structure fabricated from Permali, a wood plastic laminant, has many desirable properties. Conferences were held with Permali representatives and a proposal has been received.

Marmon Clamp Divn. of Aeroclip has been approached for a seal design proposal at the reaction chamber split line. Two approaches are being investigated, one with a copper pinch gasket, and one with a Marmon Conoseal, a Belleville spring type gasket which is also subjected to a plastic deformation as is the pinch gasket.

Arrangements are under way for installation of a 500,000-ft^3 liquid nitrogen cylinder adjacent to the south wall of Bldg. 180 to supply the nitrogen needed for the coil refrigeration. Until now conversations have been held with only the Linde representative. Linde would supply the foundation, the container, and any pumps to supply the coils.

Special equipment to tape and straighten the conductor for these large coils has been designed and is in fabrication.

Milpu

James F. Ryan, Jr.

A bakable, pulsed-gas valve has been designed and fabricated. Electrical tests have been made and testing of the vacuum seal is about to start. Some development will be needed to get the best valve-seat combination. Electrical tests showed the following performance with the circuit set up for minimum times:

From current on to valve full open	1.5 msec
From valve closed to full open	0.5 msec
From valve full open to valve closed	0.5 msec

Longer dwell in the full-open position (with the same times for opening or closing) is easily acquired by changes in power supply.

Mechanical Switch

James F. Ryan, Jr.

The mechanical switch has had about 1200 cycles on the Table Top capacitor bank with voltages from ± 2 kv to ± 12 kv--that is, 24 kv across the crowbar switch. Currents up to 90 ka passed through the switch. Some arc erosion on the leading edge of switch blade indicates that it was closing under higher voltage than was anticipated; somewhere on the order of 1000 v rather than an estimated 200 or 250 v.

Contact arrays of copper tungsten (Mallory 3W3) were tested and showed little arc erosion effects. The cylinder or blade, silver-plated chrome-copper, eroded somewhat from current even when no arcing occurred. Other tests are awaiting the arrival of a silver-tungsten cylinder.

Timing tests were made to determine the jitter of the timing-pulse circuit and the mechanical parts in the Assembly. About 375 test operations

were made, and the maximum variation between pulse signal and switch closing was ± 10 μsec in about 700 μsec. Therefore the arcing observed is not likely to have been caused by a delayed signal from the pulse coil.

The coaxial cable array to the switch has reduced the inductance of the circuit, allowing the switch to relieve the crowbar tubes completely in 1 msec, in contrast to about 3 msec with the original strap-type connections. The switch is currently operating in a routine fashion on Table Top while physics experiments are being run. Because of the low contact resistance of the switch in comparison with the drop across the ignitron tubes the current-decay time has been extended to about 14 to 15 msec rather than 8 msec.

Beam Catcher

John R. Ullman

To support this design a bulk evaporator apparatus has been set up in the high-vacuum laboratory to provide pertinent data. Limitations and system requirements for the low-melting-point unreactive metals will be obtained first.

Preliminary results using OFHC copper appear encouraging. Rates approximating 10^{-6} g/cm^2/sec at about 1 ft from the boat were achieved with little or no gas evolution. The evaporator pressure was in the 10^{-7} mm Hg.

The vacuum system to house the beam-catcher for experiments with a beam is in design. It will be a stainless steel bakable vessel with a 10-in. pumping system. An all-metal bakable vacuum valve has been developed for this system. The 10-in. valve shown in Fig. 22 is the prototype. It is being fabricated and will undergo bakeout tests prior to installation.

Astron dc Test Facility

Robert L. Nelson and Eugene T. Bradley

This experiment was in operation almost continuously during the month of April. In conjunction with these tests an electron beam analyzer was designed and fabricated for diagnostic purposes.

A flexible ball-type vacuum joint to connect the electron gun to the dc test assembly has been received from the vendor. Final assembly, testing, and leak-checking in a special fixture indicate satisfactory operation.

A new outer-groove coil for the dc test facility has been wound, tested, and installed. No excessive outgassing has been in evidence, and after 3 days pressure in the tank was down to 1×10^{-7} mm of Hg on the untrapped ion gauge.

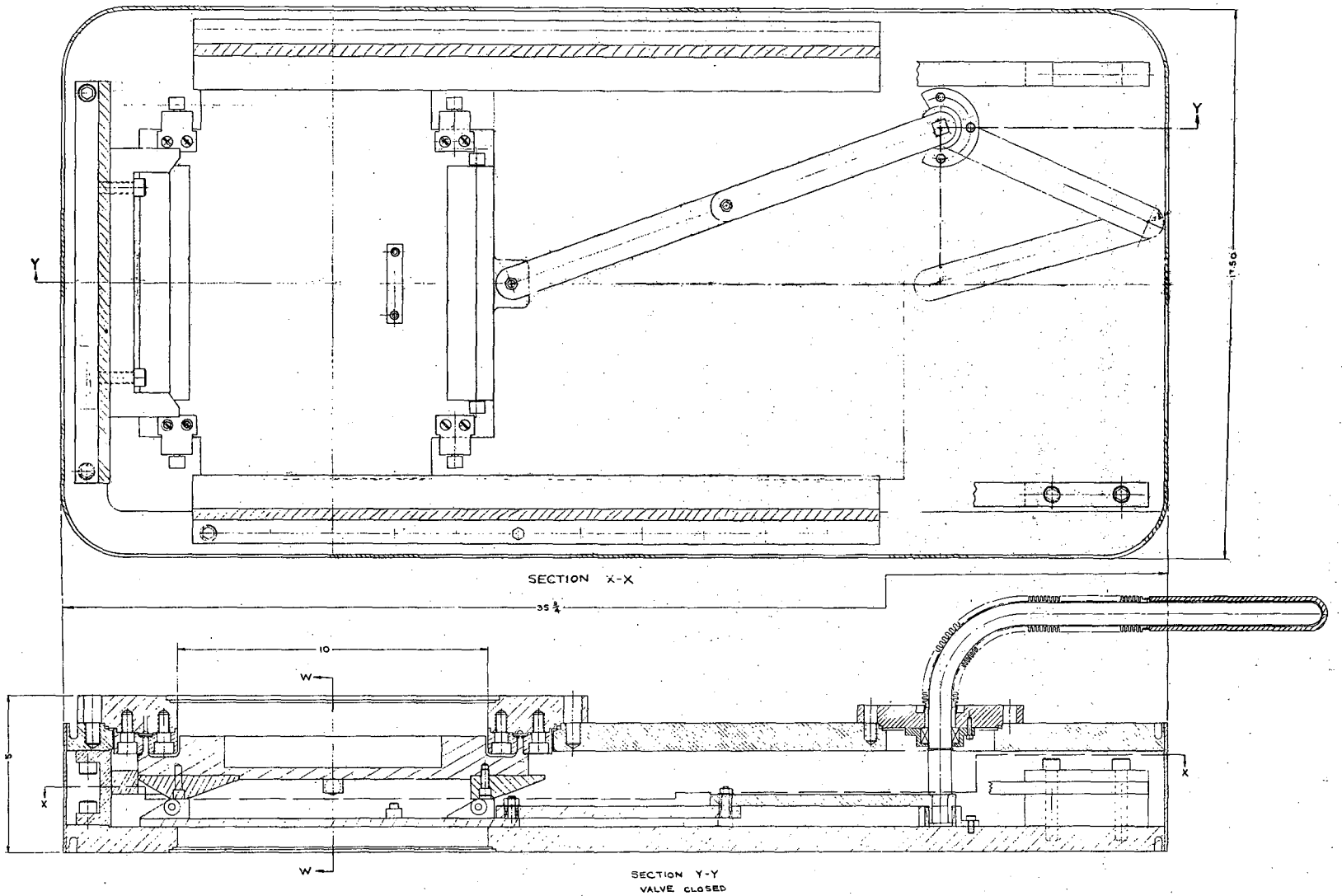

MU-17976

Fig. 22. Bakable vacuum valve for beam catcher.

Apparatus required for mounting the barium titanate slugs has been received from the vendor. Assembly of this phase of the experiment will be deferred pending result of the present test.

Astron TWL

James E. Blades, Charles A. Hurley, and Robert L. Nelson

Assembly of the Astron model is continuing in the south pit. The tracks have been laid and the main tank-support carts are in position. Preparations are being made to wrap conductor on the two main vacuum tanks prior to mounting them on the carts.

Components of the 5-ft TWL will be fabricated in the Mare Island shops at an estimated cost of $17,700. Assembly of the line will be done in Bldg. 157 under supervision of the Mechanical Engineering Department.

Atomic- and Molecular-Beam Research

Charles A. Hurley and Robert L. Nelson

A preliminary design study and cost estimate has been made on this equipment (Fig. 23). The total estimated cost, including electrical equipment, is $51,000. By May 25 the most difficult parts to fabricate have been designed, detailed, and released. This represents about 40% of the design requirements.

140-kv Injector

Charles A. Hurley

A decision has been made to move the A-48 injector into Bldg. 180 instead of the injector in Bldg. 124. The high-voltage duct and cage will pass from Bldg. 180 to Bldg. 180-A, the power supply building, through a below-grade tunnel. The high-voltage duct and cage have been fully designed and about 75% detailed. Installation drawings have not yet been started.

Low-Temperature Refrigeration

Clyde E. Taylor

The three-stage, -285°F cascade refrigerator has been operating continuously since April 13, cooling baffles on two 20-in. mercury diffusion pumps in parallel. A control system was developed to maintain constant temperature in the two evaporators with 2 separate expansion valves.

The heat-exchanger system for the new compact refrigerator is completed, and three compressors have been delivered. We are awaiting delivery of the three low-pressure compressors.

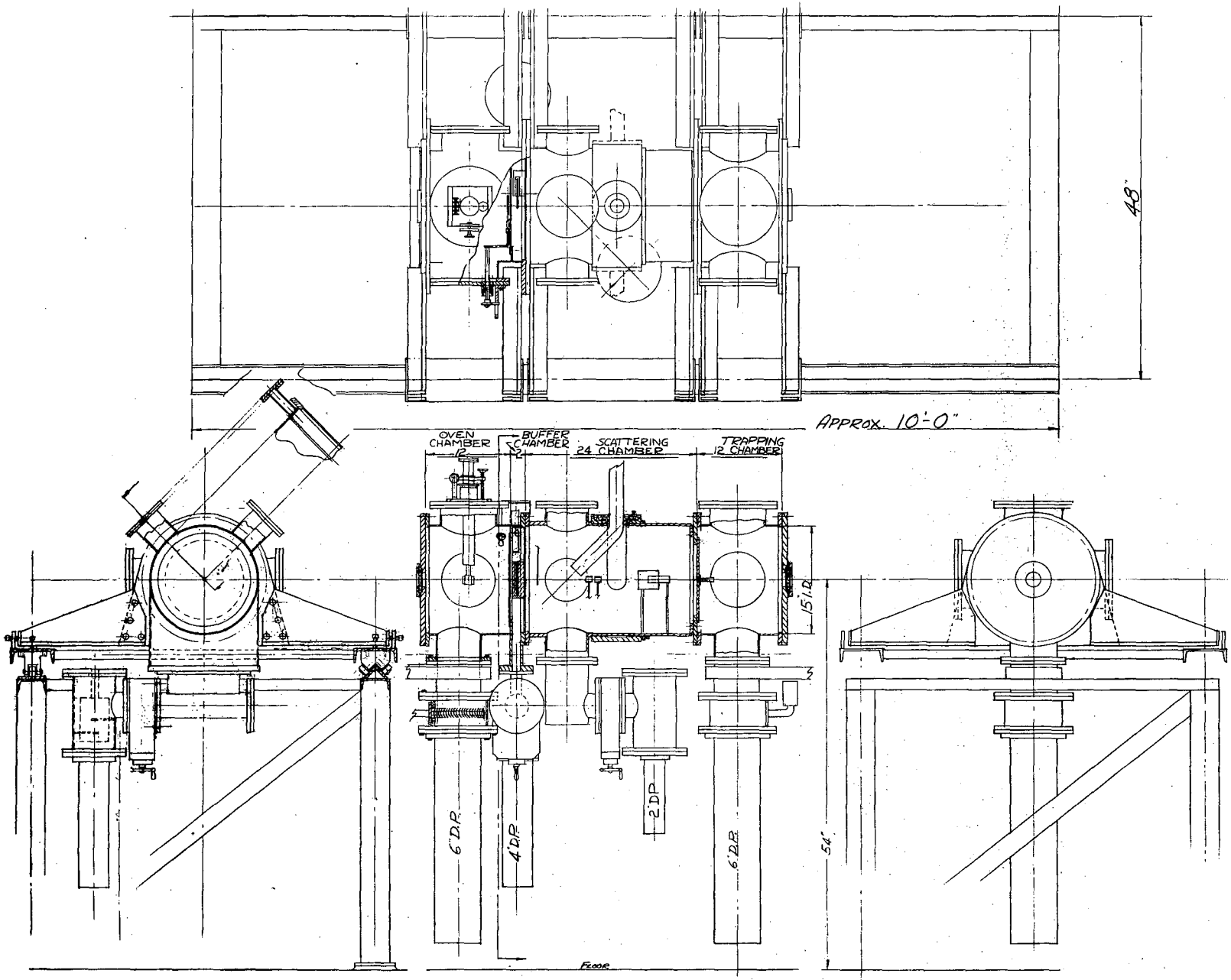

MU-17978

Fig. 23. Equipment for atomic-beam and molecular-beam research.

Cryogenic Project

Clyde E. Taylor

Analysis indicates that a 10° K sodium coil is feasible. There appears to be sufficient advantage over Cu and Al to warrant proceeding toward fabrication of a large Na coil and a 10° K refrigerator.

The following projects are under way:

1. Sodium Purification and Casting

A small sodium still has been fabricated and, after vacuum checking, will be delivered June 1. Meanwhile, filtration near the Na melting point is being used for preliminary development. A stainless steel tube, 10-ft-long and 3/16 in. o. d. with a 0.005-in. wall, wound in a 5.5-in.-diam. coil, was filled with sodium and sent to the National Bureau of Standards, Boulder, Colorado, for a resistivity measurement at liquid-He and liquid-H_2 temperature. Sodium pressure of 1000 psi was maintained during solidification in an attempt to prevent void formation (the volume decreases when Na solidifies). Preliminary resistance measurements at Lawrence Radiation Laboratory indicate the conductor was sound at liquid nitrogen temperature.

2. Coil-Fabrication Techniques

A two-layer steel mold (2 in. i. d.), consisting of four concentric cylinders with interference fits between them, is being fabricated as a model for large coils. The conductor size is $1/16 \times 1/8$ in. A flattened stainless steel tube (0.040 in. i. d. $\times$ 0.003 in. wall) has been wound in the bottom of the sodium grooves. This tube will be pressurized with He gas after the Na has been cooled, in an attempt to prevent voids and cracks in the Na caused by solidification and subsequent cooling to cryogenic temperature. Many large conductor sizes will be used for large coils.

3. Refrigeration-Cycle Studies

Arrangements have been made for a U. C. Engineering Professor and a graduate student to work full time on cycle studies during the summer. Meanwhile, a cycle analysis of the simple He gas refrigerator with two expansion engines is being programmed at LRL for the IBM 704 computer, and a complete parameter study on this system should be completed soon.

We are awaiting a proposal from Arthur D. Little on modification of our RTD Helium Gas Refrigerator, which is now at A. D. Little's Cambridge plant.

Engineering analysis of the many problems involved still occupies the major portion of effort on this project.

ELECTRICAL ENGINEERING DEVELOPMENT

Vernon L. Smith

Pyrotron

Table Top II

Because of termination of the Stanford Research Institute contract, work has been stopped on

a. High-voltage switch, 3-kv 10-msec pulse.
b. Voltage control, 10 kv shorted out for a 200-μsec interval.
c. Source fire detector.

Work is continuing on the development of a 50-kv 1-ma electron gun. Efforts to focus the beam to a spot diameter of 1 mm have been unsuccessful to date. Testing has just started on a deflection timer and driver for the gun setup.

New pulse coils were installed and tested up to ± 16.5 kv and run for 20 pulses at ± 13.5 kv. One coil blew up due to excessive voltage stresses caused by mechanical design. A new coil was made, installed, and tested successfully at ± 16 kv.

The mechanical crowbar relieving switch was retested and found to be satisfactory. It is being given a longer test by being used as a regularly installed component. (See complete details under Switch Development, below.)

Toy Top II ϕB

Power capability (dc) up to 1.5 megawatts steady or 2.7 Mw pulsed for 10 seconds is being provided; 0.9 Mw has been provided to date.

Design work is continuing on the 24-channel data-reduction system. The readout system was purchased from Non-Linear Systems and portions of it have arrived. The integrating channels preceding the readout system have not yet been successfully designed. A trial design of an integrating amplifier was set up, using a modified Kay Lab Model 111A dc amplifier. This system would integrate the 10- to 100-μsec pulses, but would not hold the signal longer than 100 msec, because of excessive dc drift. This drift is due to the noise level and to the high gain required for this method. It is necessary to control the entire circuit to a noise level of less than 1 μv on the input of the integrating amplifier.

P-4

Tests have started on the instabilities experiment. The use of the GE Minimag as a local oscillator was abandoned because of the excessive noise level, and a Raytheon QK518 backward-wave oscillator was substituted. Noise figures on the order of 6 to 7 db are obtained. The complete receiver was installed on the P-4 experiment and evidence was noted of gyrofrequency radiation at 2800 Mc with a magnetic field of 1000 gauss.

A chart recording system to read the spectral lines of the P-4 beam has been partially designed. A system was tried using a Kay Lab model 111A dc amplifier, a Varian strip chart recorder, and a conventional 1P21 photomultiplier base in the recording-scanning head of the spectrograph. It was determined that a logarithmic function would be needed to record all the spectral lines of the P-4 beam without having to switch ranges on every line area. Therefore, a dc log amp is required, and at present a suitable unit is being sought.

Cryogenics

Assistance has been given to Mechanical Engineering in design and evaluation of systems for use with low-temperature coils.

Preliminary bids were received for a low-voltage (1.5 v) high-current (20,000 amp) power supply. Prices for such a unit ran between 50¢ and 75¢ per amp.

Pinch and Collapse

Gamma Bank Area

Fuses for the charging circuit are still under development. The linear hard-core pinch experiment is in progress.

Design work for the "Levitron," toroidal hard-core pinch, is still in progress. Initial tests on a scale model were unsuccessful.

300-kv Marx Generator

Three files have been reassembled with light communication between gaps. Initial tests indicate that all three files fire properly. We experienced our first capacitor failure. Details have been referred to the manufacturer, Tobe Deutschmann, since less than 1000 shots at lower than rated voltage had been put on the capacitor.

Investigation of Energy-Storage System

This is the work necessary to test the Unipolar generator being manufactured by Allis-Chalmers. It will be tested under severe pulse conditions to determine the maximum capabilities of stored energy, voltage, and magnitude and duration of pulse current. The necessary controls and instrumentation are under design. A trip to the Allis-Chalmers factory to discuss test and design problems is planned for next month.

Astron

dc Test

The polarity of the charging network for the electron gun will be reversed as soon as down time is available. This is being done to eliminate a large isolation transformer no longer needed.

Pulsing equipment for Coils A and B is nearly completed and ready for tests.

A dc shunt of new design is being made for the main field regulator. This will reduce the 2-sec time constant considerably.

A magnetometer, using the principle of nuclear resonance, was received. It tested satisfactorily on the higher ranges (1000 gauss or so), but does not work satisfactorily at less then 200 gauss. It will be tested further.

Testing of the magnetic cores for the high-energy (5-Mev) Astron accelerator has started. Preliminary data from Berkeley tests indicate that a current of 1750 amp to 30,000 v may be necessary to obtain proper voltage pulses for the accelerator.

The switches for the above application are being considered. Ignitrons fall short because of excessive ionization times of 0.3 to 0.5 μsec for full peak current, i.e., they do not appear to have a high enough rate of rise of current. We will probably recommend thyratrons, namely the 1257 or one of the new ceramic types now being made by Kuthe, Edgerton, or G. E.

Astron Machine

No further tests have been made to the TWL, as it was understood that the 5-ft section was released for fabrication.

Switch Development

Mechanical Switching

The fast mechanical switch designed by Lawrence Radiation Laboratory has been operated for 1200 or more times on the Table Top bank, up to 90,000 amp at (± 12 kv). There are still some problems with contact erosion, and the silver-tungsten contacts are expected shortly. The present test pulse decays on an L/R time constant of about 14 milliseconds. The resistance of the switch is lower than the ignitrons being relieved, and this has improved the L/R time constant from 8 msec to 14 msec.

Explosive Switching

A survey of other groups at Livermore indicates that extensive similar work has been done here. High-speed photographs, test facilities at Site 300, and computer codes are available to assist in this work. More will be done as soon as time permits.

Ignitron Development

The 20-kv tests, utilizing the redesigned engineering test bank, are continuing in order to determine the effects of conditioning by current, high-voltage, and heat. The following special tubes have been ordered:

A Gl 7171 (a special size A ignitron) with six ignitors (rather than only one) each with a separate feed-through. A glass ignitron with electrodes like a GL 7171 except only two ignitors. Glass visually clear for photography.

Techniques for Kerr-cell and image-converter photography have been perfected. Measurements are in progress to determine the important mechanisms of firing, ignitor action, growth of cathode spots, rate of pressure build-up, plasma potential, and the formation of pinches and instabilities.

Major Negotiations

Ignitron Development

Negotiations with General Electric and Westinghouse for a Research and Development Contract per our Spec L-1310A, Advanced Ignitron-Development Contract, is nearing completion.

Miscellaneous

Perkins Power Supplies, 300-kw, 150-v dc

A unit passed LRL witness tests. Two units have been received and the balance of eight will be delivered within two weeks.

Millimeter Harmonic Generation

As part of our job of developing new diagnostic techniques, we have studied harmonic generation for use at 4-5 mm. A local oscillator operating at 23 kMc has been used to generate third-harmonic power at 69 kMc, and a superheterodyne receiver was assembled and successfully demonstrate this technique.

TALKS AND PUBLICATIONS

Symposium on Magnetic Field Design in Thermonuclear Research, Gatlinburg, Tenn., December 11-12, 1958:*

A. F. Waugh, Optimization of a dc Coil Design with Respect to Coil Construction Cost and Cost of Installed dc Power, UCRL-5498, Feb. 20, 1959.

A. F. Waugh, Some Aspects of Heat Dissipation from Aluminum Foil Coils, UCRL-5499, Feb. 20, 1959.

A. I. E. E. General Winter Meeting, New York, N. Y., February 3, 1959:*

David B. Cummings, Development of Switch Tubes for Controlled-Fusion Research, UCRL-~~5339~~ 5539, April 17, 1959.

Conference on Theoretical Aspects of Controlled Fusion Research, Gatlinburg, Tenn., April 27-28, 1959:

R. F. Post, Pressure Balance and Stability Criteria in the Mirror Machine, UCRL-5524-T Abstract, March 25, 1959.

Gordon Gibson and E. J. Lauer, Containment Time of Mev Positrons in a Magnetic Mirror Machine, UCRL-5488-T Abstract, March 31, 1959.

Lewi Tonks, Progress in the Analysis of the E-Layer UCRL-5522 Abstract, March 24, 1959.

H. P. Furth, Some Theoretical Problems of Practical Interest in the Pinch Program, UCRL-5523-T Abstract, March 26, 1959.

Edward Teller and T. G. Northrop, The Integral Invariant for Adiabatic Particle Motion.

Convention on Thermonuclear Processes of the (British) Institution of Electrical Engineers, London, England, April 29-30, 1959:

C. M. Van Atta, Thermonuclear Research in the U. S. A.

Sherwood Vacuum Meeting, Washington, D. C., April 29, 1959:

Norman Milleron, The Scope of the Work Being Undertaken in the Vacuum Laboratory.

Leonard Levenson, Progress on Large Vacuum Components.

Angus Hunt, Vacuum Parameters for the Neutron-Injection Mirror Machine.

Thomas Batzer, Large Bakable Valve Development.

J. Ralph Ullman, Trends in Vacuum Systems and Components Design.

American Physical Society Spring Meeting, Washington, D. C., April 30, May 1-2, 1959:

S. A. Colgate, G. Gibson, and J. Killeen, Boundary-Layer Formation in the Pinch, UCRL-5195-T Rev. Abstract, February 12, 1959.

John Killeen and B. A. Lippman, Circuit Dynamics of the Pinch, UCRL-5424-T Abstract, Februray 12, 1959.

---

*Not included in preceding report.

American Physical Society Spring Meeting, Washington, D. C., April 30, May 1-2, 1959 (continued)

D. H. Birdsall and H. P. Furth, Pulsed 200-Kilogauss Magnet for Accelerator Experiments, UCRL-5486-T Abstract, February 16, 1959.

R. T. Spoerlein, D. H. Birdsall, S. A. Colgate, and H. P. Furth, Electron Beam Transmission Along a "Stabilized Pinch," UCRL-5489-T Abstract, February 17, 1959.

S. A. Colgate, D. H. Birdsall, J. P. Ferguson, H. P. Furth, and F. O. Halliday, A Study of the Generalized Pinch Configuration, UCRL-5490-T Abstract, February 17, 1959.

S. A. Colgate and M. H. Johnson, Hydrodynamic Origin of Cosmic Rays, UCRL-5485-T Abstract, February 12, 1959.

John M. Wilcox, T. K. Allen, William R. Baker, and Robert V. Pyle, Generation of Alfvén Waves in a Laboratory Plasma, UCRL-8723 Abstract, April 10, 1959.

7th Region IRE Conference and Electronics Exhibit, Albuquerque, New Mexico, May 6-8, 1959:

V. L. Smith, Electronic Engineering Design Problems in Fusion Research, UCRL-5559 Abstract, April 27, 1959.

H. P. Furth, Controlled Thermonuclear Research at the Lawrence Radiation Laboratory, Livermore and Berkeley, UCRL-5475-T Abstract, Jan. 30, 1959.

W. B. Myers, Some Characteristics of Sherwood Systems.

Symposium on Surface Effects on Space Craft Materials, Lockheed, Palo Alto, Calif., May 12-13, 1959:

Norman Milleron participated in round-table discussion concerned with aspects of vacuum technology.

Journal Publications

Physical Review Letters:

T. K. Allen, William R. Baker, Robert V. Pyle and John M. Wilcox, Experimental Generation of Plasma Alfvén Waves, Phys. Rev. Lett. 2, 383 (1959).

The Physics of Fluids:

W. A. Newcomb, Magnetic Differential Equations (to be published).

Information Division
sa

This report was prepared as an account of Government sponsored work. Neither the United States, nor the Commission, nor any person acting on behalf of the Commission:

A. Makes any warranty or representation, expressed or implied, with respect to the accuracy, completeness, or usefulness of the information contained in this report, or that the use of any information, apparatus, method, or process disclosed in this report may not infringe privately owned rights; or

B. Assumes any liabilities with respect to the use of, or for damages resulting from the use of any information, apparatus, method, or process disclosed in this report.

As used in the above, "person acting on behalf of the Commission" includes any employee or contractor of the Commission, or employee of such contractor, to the extent that such employee or contractor of the Commission, or employee of such contractor prepares, disseminates, or provides access to, any information pursuant to his employment or contract with the Commission, or his employment with such contractor.