UCRL -8776

Cy. 2

UNIVERSITY OF CALIFORNIA

Ernest O. Lawrence Radiation Laboratory

TWO-WEEK LOAN COPY

This is a Library Circulating Copy which may be borrowed for two weeks. For a personal retention copy, call Tech. Info. Division, Ext. 5545

BERKELEY, CALIFORNIA

DISCLAIMER

This document was prepared as an account of work sponsored by the United States Government. While this document is believed to contain correct information, neither the United States Government nor any agency thereof, nor the Regents of the University of California, nor any of their employees, makes any warranty, express or implied, or assumes any legal responsibility for the accuracy, completeness, or usefulness of any information, apparatus, product, or process disclosed, or represents that its use would not infringe privately owned rights. Reference herein to any specific commercial product, process, or service by its trade name, trademark, manufacturer, or otherwise, does not necessarily constitute or imply its endorsement, recommendation, or favoring by the United States Government or any agency thereof, or the Regents of the University of California. The views and opinions of authors expressed herein do not necessarily state or reflect those of the United States Government or any agency thereof or the Regents of the University of California.

UCRL-8776

cy 2

UNIVERSITY OF CALIFORNIA

Lawrence Radiation Laboratory
Berkeley, California

Contract No. W-7405-eng-48

NUCLEAR SPIN OF SAMARIUM-153

Amado Cabezas, Edgar Lipworth, Richard Marrus, and Joseph Winocur

June 1, 1959

Printed for the U. S. Atomic Energy Commission

NUCLEAR SPIN OF SAMARIUM-153*

Amado Cabezas, Edgar Lipworth, Richard Marrus, and Joseph Winocur

Department of Physics and Lawrence Radiation Laboratory
University of California
Berkeley, California

June 1, 1959

The nuclear spin of Sm^{153} has been established by atomic-beam magnetic resonance as $I = 3/2$.

An adequate beam of Sm^{153} can be produced from 50 mg of stable samarium metal irradiated for 8 hours in the Livermore pile at a flux of about 2×10^{13} neutrons/cm^2-sec. After irradiation, the material is placed in a small oven machined from tantalum containing an inner crucible with a sharp lip (Fig. 1). With this oven arrangement it is found that creep is controlled up to the beam temperature of about 1300°C.

The apparatus used in this experiment employs the flop-in type of magnet arrangement first proposed by Zacharias.[1] Radioactive detection of the samarium beam is employed. Platinum foils in the detector position are exposed to the samarium beam at a particular frequency setting of the rf oscillator used to power the hairpin. After a 5-minute exposure the foil is placed in a flow proportional β counter (background about 2 to 5 cpm), and the decay rate is observed. Typical resonance counting rates are about 15 cpm.

Optical spectroscopic measurements[2] on samarium had established the ground-state configuration of this element to be $(4f)^6(6s)^2$ coupling to the ground-state term ^7F. In this experiment, measurements were made on the

*Work done under the auspices of the U. S. Atomic Energy Commission and the Office of Naval Research.

states $J = 1$ and $J = 2$ that arise from this term. That these states are both present in the beam in sufficient quantities to enable measurements to be made is consistent with the optically measured fine structure.[2] Three resonances were observed in a low-field search at 1.0 gauss. These were ascribed to the multiple-quantum transitions:

$I = 3/2,\ J = 1;\ F = 5/2$ $\quad m_f = 5/2,\ m_f = 3/2,\ m_f = 1/2,\ m_f = -1/2 \longleftrightarrow F = 5/2,\ m_f = -5/2$

$I = 3/2,\ J = 2;\ F = 7/2$ $\quad m_f = 7/2,\ m_f = 5/2,\ m_f = 3/2,\ m_f = 1/2 \longleftrightarrow F = 7/2,\ m_f = -7/2$

$m_f = -1/2 \longleftrightarrow F = 7/2,\ m_f = -5/2$

and $I = 3/2,\ J = 2;\ F = 5/2$ $\quad m_f = 5/2,\ m_f = 3/2,\ m_f = 1/2 \longleftrightarrow F = 5/2,\ m_f = -3/2$

All the transitions corresponding to a given I, J, and F occur at the same frequency in Zeeman region and contribute to the resonance intensity.

Each of these sets of transitions was observed at three fields, and resonance curves were traced out (Fig. 2). These resonances are characterized by three g_F values tabulated along with the observations in Table I.

Table I

Tabulation of all observed g_F values

$\frac{\mu_0 H}{h}$ (Mc)	J = 1, F = 5/2	J = 2, F = 7/2	J = 2, F = 5/2
1.000	0.61 ± .05	0.91 ± .05	1.01 ± .05
1.985	0.60 ± .03	0.86 ± .02	0.94 ± .02
3.945	0.598± .010	0.855± .011	0.941± .013
Mean g_F	0.598± .010	8.856± .011	0.941± .010
Predicted g_F ($I = 3/2$; $g_J = 1.5$)	0.600	0.857	0.943

In Zeeman region, the g_F value is given by

$$g_F = g_J \frac{F(F+1) + J(J+1) - I(I+1)}{2F(F+1)},$$

where g_J is the electronic g value. A term of the order of the nuclear moment has been neglected.

The observed g_F values are fitted to well within the experimental error on the assumption that $I = 3/2$, that the states $J = 1$ and $J = 2$ are both present in the beam, and that the g_J value of both J states is 1.5, the value obtained from pure L-S coupling among the six 4f electrons.

The observed spin of 3/2 is consistent with the beta decay from the ground state of Sm^{153}.[3] Interpretation of spin 3/2 is difficult on the shell model. However, by use of the energy-level diagram of Nilsson,[4] $I = 3/2$ can be explained by assuming large deformations and that the state of the 91st neutron is either $3/2 - [521]$ or $3/2 + [651]$, where the notation is that of Mottelson.[5]

Acknowledgments

The authors are indebted to Fred Schon and the crew of the LPTR at Livermore for carrying out the irradiations. One of the authors (RM) would like to thank Professor B. R. Mottelson for a stimulating conversation concerning collective effects in the rare earth region.

References

1. J. R. Zacharias, Phys. Rev. 61, 270 (1942).
2. W. Albertson, Phys. Rev. 47, 370 (1935).
3. V. S. Dubey, C. E. Mandeville, and M. A. Rothman, Phys. Rev. 103, 1430 (1956).
4. S. G. Nilsson, Kgl. Danske Videnskab. Selskab Mat.-Fys. Medd. 29, No. 16 (1955).
5. B. R. Mottelson and S. G. Nilsson, Mat. Fys. Skr. Danske Videnskab. Selskab 1, No. 8 (1958).

Legends

Fig. 1. Cutaway view of oven used to produce samarium beams.

Fig. 2. Resonances observed in the $J = 1$ and $J = 2$ states of Sm^{153}.

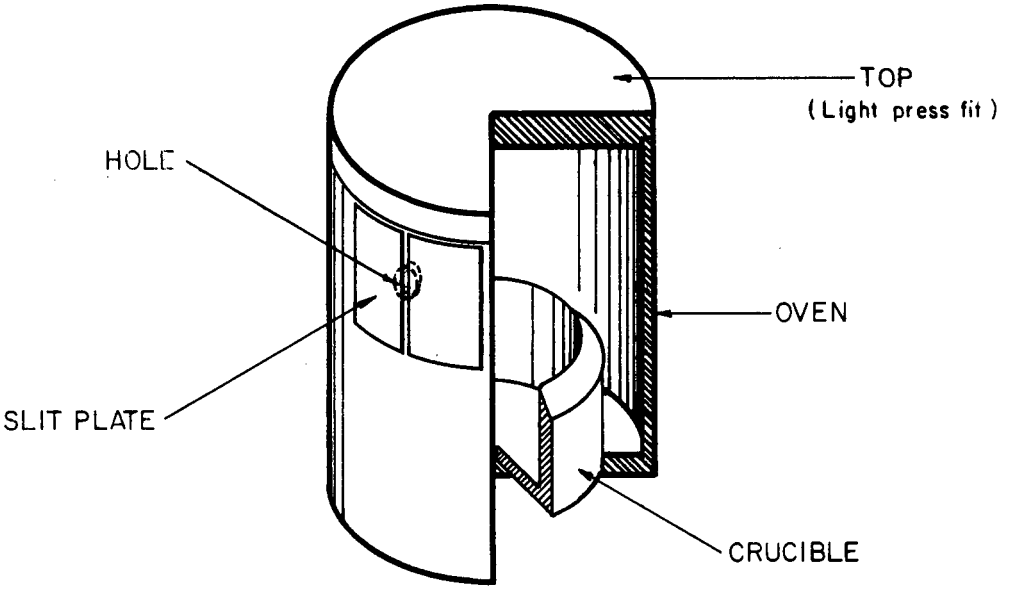

OVEN

MU-13888

Fig. 1.

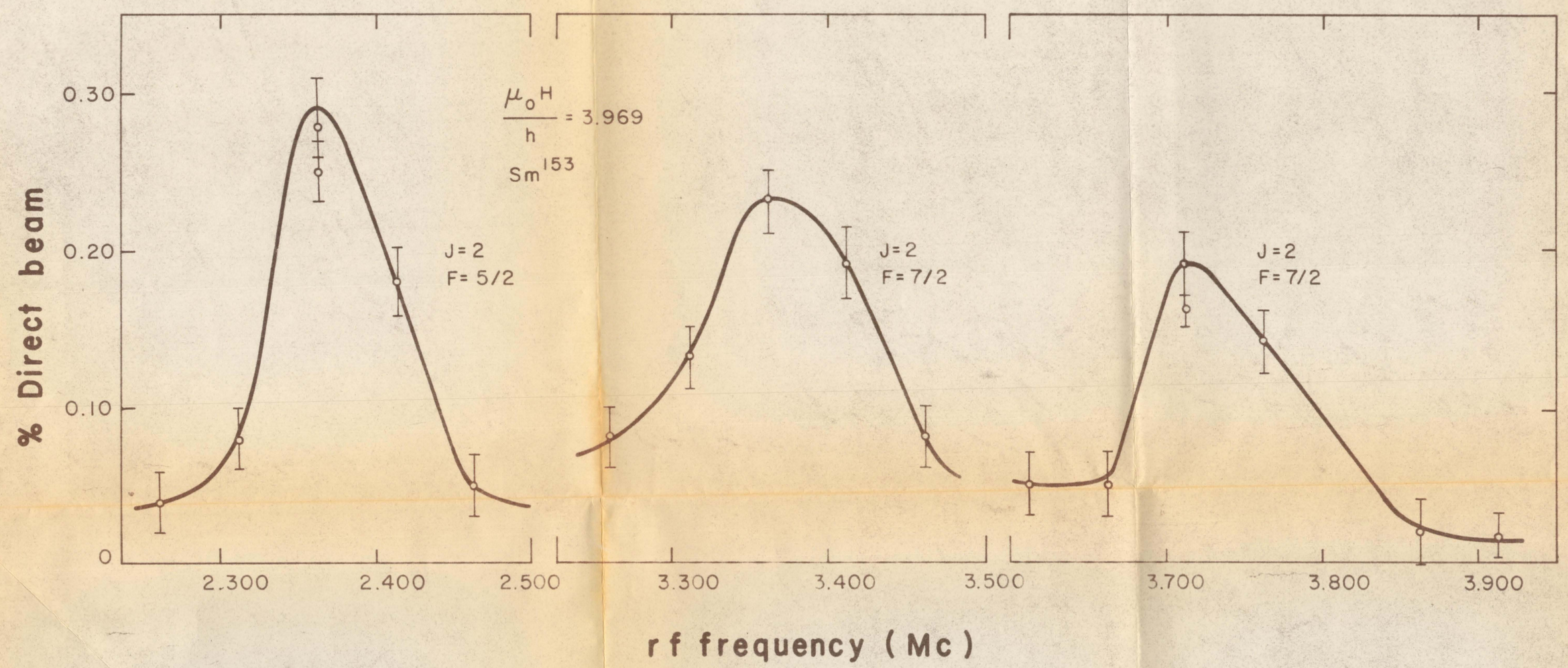
% Direct beam
0.30
0.20
0.10
0
$\frac{\mu_0 H}{h} = 3.969$
Sm^{153}
J = 2
F = 5/2
J = 2
F = 7/2
J = 2
F = 7/2
2.300
2.400
2.500
3.300
3.400
3.500
3.700
3.800
3.900
rf frequency (Mc)

55,555-3