UCRL-8792

UNIVERSITY OF CALIFORNIA

Ernest O. Lawrence Radiation Laboratory

TWO-WEEK LOAN COPY

This is a Library Circulating Copy which may be borrowed for two weeks. For a personal retention copy, call Tech. Info. Division, Ext. 5545

BERKELEY, CALIFORNIA

DISCLAIMER

This document was prepared as an account of work sponsored by the United States Government. While this document is believed to contain correct information, neither the United States Government nor any agency thereof, nor the Regents of the University of California, nor any of their employees, makes any warranty, express or implied, or assumes any legal responsibility for the accuracy, completeness, or usefulness of any information, apparatus, product, or process disclosed, or represents that its use would not infringe privately owned rights. Reference herein to any specific commercial product, process, or service by its trade name, trademark, manufacturer, or otherwise, does not necessarily constitute or imply its endorsement, recommendation, or favoring by the United States Government or any agency thereof, or the Regents of the University of California. The views and opinions of authors expressed herein do not necessarily state or reflect those of the United States Government or any agency thereof or the Regents of the University of California.

UCRL-8792

UNIVERSITY OF CALIFORNIA

Lawrence Radiation Laboratory
Berkeley, California

Contract No. W-7405-eng-48

HIGH VELOCITY RANGE AND ENERGY-LOSS MEASUREMENTS in Al, Cu, Pb, U, and EMULSION

Walter H. Barkas and Sten von Friesen

January 1961

TABLE OF CONTENTS

	Abstract	3
I.	Introduction	5
II.	Apparatus	9
III.	Experimental Procedure	13
IV.	Measurements	16
V.	Scattering Corrections to the Measured Ranges	19
VI.	The Range Straggling	24
VII.	Stopping Power Results	26
VIII.	Determination of Mean Excitation Potentials	28
IX.	Remarks on the Emulsion Standard	32
	Appendix	37
	Figure Captions	39

High Velocity Range and Energy-Loss Measurements in Al, Cu, Pb, U and Emulsion

Walter H. Barkas and Sten von Friesen*

Lawrence Radiation Laboratory
University of California
Berkeley, California

ABSTRACT

Measurements were made of relative stopping powers of several materials in the proton energy intervals 750-600 Mev, 600-450 Mev, 450-300 Mev and 750-0 Mev. By collimation and magnetic analysis a "pencil beam" free of degraded particles was extracted from the 184" cyclotron. Using this beam in "good geometry" the stopping powers of Al, Pb, U and emulsion were measured relative to Cu.

The total ranges yield the most accurate estimates of the mean excitation potentials. It is assumed that the mean excitation potential of Al is 163 e.v., and that at 750 Mev. substantially all the tight binding corrections required are those for the K and L shells. The mean excitation potentials in e.v. found with these assumptions are: copper, 323; lead, 826; uranium, 917; and emulsion, 328. The results from the differential stopping-power measurements are in general accord with these data. However, the agreement of the differential measurements with the theoretical ratios could be improved by raising the above mean excitation potentials of Al and Pb or by lowering

*Permanent address: Department of Physics, University of Lund, Lund, Sweden

those of copper, uranium and emulsion. This experiment confirms the general shape of the I/Z vs Z curve found by Bakker and Segrè, and when similarly normalized, is in reasonable absolute agreement. The status of the emulsion range-energy table is reviewed in the light of these and other relevant measurements. Incidental observations were made on the scattering, straggling and attenuation behavior of a highly collimated monoenergetic beam of protons which was brought to rest in a large block of copper.

High Velocity Range and Energy-Loss Measurements in Al, Cu, Pb, U and Emulsion

Walter H. Barkas and Sten von Friesen*

Lawrence Radiation Laboratory
University of California
Berkeley, California

I. INTRODUCTION

The problem presented by the stopping of a charged particle in matter has intrinsic interest. It is also of considerable practical importance for deriving particle energies from range measurements.

Because the Bethe-Bloch theory of stopping is derived with an assumption that the particle velocity is large compared with the velocity of the atomic electrons, the approximate applicability of the theory at lower velocities is largely a matter of good fortune. At a certain low velocity, it breaks down completely. Moreover, there is no prescription for correcting the theory at the lowest velocities; at intermediate velocities only piecemeal and progressively less reliable theoretical procedures are available to correct for the tight-binding of the K shell, the L shell, the M shell, etc.

In the last few years the work of Lindhard and Scharff[1] has held forth the promise of a formalism with a greater range of validity. Their

*Permanent address: Department of Physics, University of Lund, Lund, Sweden

theory extends the possibility of calculation to much lower velocities. It applies best to materials of high atomic number for which a statistical description of the electron density is valid. For these elements, the tenability of the Bethe-Bloch theory always has been questionable except at very high velocities. On the other hand, their formulation has not as yet the simple elegance of the Bethe-Bloch theory. A way has not been found to express the whole effect of the atom-dynamics by a single parameter such as the mean excitation potential. Accurate energy-loss calculations have not been attempted with this theory, although computations somewhat in the spirit of the Lindhard-Scharff theory have been made.[2]

At relatively high velocities, the Bethe-Bloch theory, with small corrections, remains the most practical means for calculating energy-loss rates. Some of the current problems in connection with it are: a) how the shell corrections are to be made so that the mean excitation potential is velocity independent, and b) how this velocity-independent mean excitation potential depends on the atomic number.

Much of the range and energy-loss data from which the existing information is derived have been obtained at such low velocities that large tight binding corrections are required, and the way in which these are to be made is somewhat obscure. This is especially true of the M shell and higher corrections. For this reason, measurements at sufficiently high velocities for the shell effects to be small are best for defining the mean excitation potential.

Measurements by Bakker and Segrè[3] were made at a proton energy of $\approx$ 300 Mev, so that the shell effects were not large, and they were

disregarded. Total range measurements for high proton velocities were made by Mather and Segrè.[4] The interpretation of these results has been uncertain because experiments at lower velocities[5] have tended to give higher corrected values for the mean excitation potentials than those resulting from the measurements of Mather and Segrè.

It has been suggested[6] as a possible explanation of this discrepancy that when the range is large, nuclear interaction effects become important, so that nuclear scattering as well as coulomb scattering tends to shorten the projected range, (i.e., the mean depth of penetration of charged particles which are incident normal to an absorber). When the range amounts to as much as one mean free path for a nuclear interaction, such an effect is expected already to be serious. Whereas the data of Bakker and Segrè should be relatively insensitive to this effect, it is thought that the results of Mather and Segrè are affected. They measured total ranges, and the geometry of their detector was such as to accept protons scattered through large angles. Only <u>relative</u> stopping powers were measured by Bakker and Segrè, so that raising or lowering of the mean excitation potential of Al to which their data was normalized, affects their derived excitation potentials. In addition, tight-binding effects should not be neglected altogether in calculating mean excitation potentials of heavy elements from their data.

To aid in resolving some of the existing problems regarding stopping powers, we thought it would be useful to carry out an experiment in which special care was exercised to eliminate known interfering effects. We have designed this experiment a) to use several proton energies all so high that shell corrections are small, b) to minimize scattering

corrections by using a "good-geometry" experimental arrangement,

c) to work with elements of both high and low atomic numbers, and

d) to include materials for which absolute range-energy measurements or reliable theory exist up to high energies.

A difficulty in the employment of high particle velocities for the determination of the mean excitation potentials is that the energy-loss rate becomes insensitive to the mean excitation potential, and very good accuracy of measurement is demanded.

In this new experiment we have employed the proton beam of the 184" cyclotron to make measurements in "good geometry" of the relative stopping powers of Al, Cu, Pb, U and nuclear-research emulsion. The beam energy was known to be close to 750 Mev. Relative stopping powers in the energy intervals of 750-600 Mev, 600-450 Mev, 450-300 Mev, and 750-0 Mev were measured with errors that in most instances were some tenths of a percent. Emulsion was included in the experiment because in previous work[7] its absolute stopping behavior has been studied throughout this velocity interval. It was thought that it would provide a means, in addition to the range in aluminum, for absolute energy calibration, and the experiment would provide an over-all check of high-energy range curves.

II. APPARATUS

The experiment was designed to utilize the external proton beam of the synchrocyclotron. Fig. 1 shows schematically the arrangement of the cyclotron and other pieces of equipment referred to below. The deflecting system, D , is of the regenerative type. The deflected beam, on reaching a cyclotron radius where the field was weak, passed through a pre-magnet collimator C-1 , and was subsequently bent by the steering magnet M-1 so as to be accurately parallel to the collimator C-2 through which it passed (with the aid of the quadrupole lens Q) into the experimental area beyond C-2.

The collimator C-2 was of brass 40 inches long. The aperture in it was a vertical $\frac{5}{32}$" x $\frac{5}{8}$" slit. From the collimator the beam emerged into the experimental area through a thin-walled ionization chamber by means of which the beam current was monitored. The beam then traversed about 3 feet of air before entering the field of an analyzing magnet, M-2 (magnet THOR) where it was bent through an angle of 11 degrees. Precise adjustments of position, rotation and tilt of this magnet were necessary. The vertical clearance between the pole faces of magnet, M-2 was 5/32". The brass plate S, which filled the magnet aperture vertically, limited the beam on its low momentum side. The edge adjacent to the beam was cut in the arc of a circle. When the beam passed through the analyzing magnet, the field was adjusted so that the point of maximum intensity of the beam followed a path with a radius of curvature about 1/8" greater than that of the edge of the brass plate. The plate therefore acted as a "scraper" which effectively eliminated degraded components of the beam which had insufficient momentum to clear it.

After the beam emerged from the analysing magnet most of its cross section was contained in a circle of about 1/4" diameter, but owing to small angle scattering within the analyzing magnet, a weak degraded "halo" surrounded the central core of the beam. This was eliminated by the lead collimator C-3, which was tailored to the cross sectional structure of the beam so that none of the central core of the beam was intercepted but the "halo" was largely eliminated. The longitudinal dimension of this collimator, 15", was made greater than the range of the protons.

After emerging from C-3 the beam was considered to have met sufficiently stringent requirements, and was permitted to traverse absorbers, the energy losses in which were among the subjects of this investigation.

The absorbers were in the form of rectangular parallelopiped rods or bars. In cross section they were 1" x 1". The protons traversed these bars longitudinally. This insured that if a proton were deflected through an appreciable scattering angle it would emerge from the side of the absorber and be eliminated from the beam. The emulsion absorbers were constructed by cutting out a large number of 1" x 1" squares of 600 micron Ilford G.5 emulsion which were taped into bars. At point P of Fig. 1 the beam entered a range analyser in the form of a wedge absorber with a nuclear track plate as the detector. The construction of this wedge analyzing instrument is shown in Fig. 2. Except when the U wedge was used, the nuclear track plate was of 1" x 6" glass coated with Ilford C.2 emulsion, either 50 or 200 microns in thickness. With the

U wedge, 1" x 1-3/8" plates were employed. Each plate was wrapped in black paper to exclude light, but care was taken to provide good contact between the emulsion coated face of the plate ant the inclined surface of the metal wedge. One end of the plate was made accurately flush with the tapered end of the wedge, as all measurements on the plate were to be taken with respect to this, the marked end of the plate.

The dimensions in millimeters of the wedges fabricated of the different metals are given in Table I.

Table I

	a	b	c	d
Al	6.2	158.5	25.4	1.6
Cu	6.0	158.7	25.4	1.6
Pb	6.3	158.6	25.2	1.9
U	0.	24.1	24.0	0.3

The dimensions corresponding to the paper on each wedge was 1 inch.

The lateral and vertical positioning of the wedge was established by finding the beam trajectory with no absorbers in position. The distance to the wedge, about 40 inches from the collimator C-3, was maintained for all exposures. This distance must be at least equal to the range of 750 Mev protons in Al ($\approx$ 1 meter).

Absorbers I, II and III as listed in Table II were calculated to bring the proton energy down to about 300 Mev in three steps 750-600 Mev, 600-450 Mev, 450-300 Mev. The remaining energy was to be expended in the copper wedge absorber described above. In addition the total range was found in the metals by providing absorbers plus wedges of the same

material calculated to bring the particles to rest near the middle of the wedge. In Table II these measured ranges are listed. The absorbers were supported by a light aluminum channel, and were located so that the center of each type of absorber, I, II, or III was maintained at the same position regardless of the material.

III. EXPERIMENTAL PROCEDURE

For an experiment such as this, it is important that the beam be monoenergetic, or at least that its structure be known. A preliminary investigation[8] was made, and it was found that the unanalysed beam coming through the collimator C-2 was complex, consisting of at least two components, B and B' emerging at a small angle with respect to each other. The mean range of B' was less than that of B by about 10%. The spread of ranges observed in B' was 2 or 3 times as large as that in B. The beams could also be resolved from each other by their time of emergence from the cyclotron. For analysing the temporal behavior of the beam, a scintillator was placed in the beam after it emerged from C-2.

While it would have been interesting to study this effect further, there was insufficient time allotted to the experiment for us to make a detailed investigation of the origin of the second beam, and we simply undertook to eliminate it.

The collimating slit C-1 is constructed so that the width and lateral position are adjustable. By reducing this slit-width to 1/4" and varying its position, it was found that the relative intensity of beam B' was affected, and a position was found where its presence was not detected.

After the currents in quadrupole Q and, magnets M-1 and M-2 were optimized, regulating equipment maintained the fields constant to a few parts in 10^4. The currents in M-2 and Q were also personally monitored by the experimenters. The structure of the beam cross-section was studied at various points beyond where it emerged from C-2. This was done with standard 1-3/16' x 1-5/8" films used in film badges for

radiation monitoring. These could be exposed, developed, and fixed in a few minutes, and were very convenient for the purpose. Figure 3a is the image recorded in this way of the double beam structure at the entrance to magnet M-2, and Fig. 3b is the image after B' was eliminated. Figures 4a and 4b are similar prints that show the actual size of the beam at the entrance to C-3 and at the point where the beam reached the absorber.

As a supplement to this experiment the absorption, scattering, and straggling behavior of this highly collimated beam of protons was observed as it was stopped in a "semi-infinite" block of copper. These results are summarized in Appendix A.

Exposures were made as follows: To determine total ranges in Al, Cu, Pb, and U, absorbers and wedges of the same meterials were placed in the beam. To determine relative differential stopping powers, exposures were made with these materials and emulsion absorbers successively placed in each position I, II, and III, while maintaining copper absorbers in all other positions. Each exposure was carried out twice, once with a detecting plate of 200 micron emulsion and once with a 50 micron plate. Interleaved with the other exposures, were 15 in which the absorber was copper alone. These exposures were made to give us an external measure of the beam stability and our measurement error.

The intensity of the exposure was determined by preliminary tests and an exposure of 1 minute at 4.5×10^{-8} amperes measured at the entrance to the experimental area was adopted. This intensity turned out to be satisfactory except for the 50 micron emulsion exposure to obtain the

total range in U. Only a small fraction of the beam intensity survived to this detecting plate. In 50 micron C.2 emulsion, the track segments of protons emerging from the U were ~~very~~ badly scattered, and were very short so that only poor differentiation between beam protons and background was obtained. Fortunately, a good range spectrum was obtained from the 200 micron plates.

IV. MEASUREMENTS

The 50 micron plates were analysed at Berkeley and the independently exposed 200 micron plates were scanned in Lund. The 200 micron plates were of somewhat better quality and were more completely analysed. The 50 micron plates were also carefully measured and served as a check on the 200 micron plates. In the final analysis double weight was assigned to the Lund plates. No serious discrepancies were found, however, so the weighting was of little importance.

The plates were examined under oil immersion with either 60x or 100x objectives. Each plate was scanned as follows: The plate was mounted on a microscope stage so that it could be translated along its longitudinal or x-axis, the amount of this translation being defined as x . It was possible to adjust the reading to be zero at the end of the plate that had been at the tapered end of the wedge. As x was increased from zero, first no tracks were seen, then a region in which protons were seen ending in the emulsion was passed. Scanning was not begun until a region of the emulsion was reached where proton endings again were not seen, but a flux of proton tracks directed generally along the x-axis was visible. The plate was then scanned by moving it so that the observer followed the tracks in the direction in which the particles were going; toward small values of x. Protons coming to rest in the emulsion were counted in each 1 millimeter or each 1/2 millimeter interval of x , and in a y-interval defined by limit lines in the microscope ocular. To be counted, the angle of entrance of a track into the emulsion was required to be less than 45° to the x-axis.

The tracks seen to terminate between $x = x_1$ millimeters and $x = x_1 + 1$ millimeters from the end of the plate were recorded as measuring the density of endings at $x = x_1 + 1/2$ millimeters. More than one traversal of the plate was made if the intensity was low, but the scanning was confined to a narrow band along the long axis of the plate.

Because the plates were inclined at an angle, α, equal to arc tan $\left[(c-d)/(b-a)\right]$, a correction was required for this inclination. The finite thickness of the emulsion and the thickness of the covering paper and tape was also included in the calculated stopping positions of the particles after a mean value of x was found on each plate.

The range distribution derived from 7 exposures of 200 micron plates in which all-copper absorbers were used is shown in Fig. 5.

It will be noticed that an asymmetry exists in the peak, there being an excess of low energy particles. The "tail" is probably explainable as residue of beam B', to the presence in the beam of degraded particles from collimator scattering, and possibly to inelastic nuclear processes. Nevertheless this beam was regarded as "clean" enough for carrying out precise range measurements.

As a practical means for eliminating the effect of the low energy "tail", a preliminary range estimate was found. Then the parts of the spectrum extending beyond $\pm$ 2.5% of this range were omitted in the final range average. As may be seen from Fig. 5 the straggling in range, arising from all causes, is hardly more than the theoretical range straggling, thus indicating that the beam energy remained constant, the

scattering effects were small, and observer and instrumental errors did not seriously affect the data.

Numerous density measurements of the absorbers were made. The U absorbers were cut from pieces of density 18.848 ± 0.005 g/cc , which was established by weighing and measuring the dimensions of pieces after their final accurate machining into the form of rectangular parallelopipeds. Measurements on the 5 pieces of lead gave densities of 11.324, 11.298, 11.305, 11.252, and 11.315 g/cc. These differed enough so their individual densities were used. The density of the Al was determined to be 2.7852 ± 0.0017 g/cc. The aluminum, however, was actually an alloy, #2024, of nominal composition Al:93.4% , Cu:4.5% , Mn:0.6% , and Mg: 1.5% . By chemical analysis the composition was determined to be Al: 93.62% , Cu: 4.57% , Mn: 0.44% , and Mg: 1.37%. The copper used had a density of 8.909 ± 0.001 g/cc .

The path lengths in all the metal absorbers were measured with an accuracy an order of magnitude better than the densities could be determined, and the systematic errors in the density measurements limit the ultimate accuracy obtainable. The emulsion bars, made up of 1" x 1" emulsion pellicles were carefully machined so as to have a square cross-section. The average area of 15 pellicles taken at random from the bars was 0.9920 ± 0.001 square inches. The bars were also weighed, and the emulsion density was determined by weighing in pure CCl_4 and in air to be 3.853 ± 0.002 g/cc. The weighing and density measurements were made immediately after use, and when in the form of bars, the emulsion was carefully taped to prevent water loss or gain by the emulsion.

V. SCATTERING CORRECTIONS TO THE MEASURED RANGES

Mather and Segrè[4], and more recently, Bichsel and Uehling[9], estimated the range shortening caused by Coulomb scattering in the absorber. In the calculations of Mather and Segrè for high velocity particles, no restriction on the lateral displacement of the beam in traversing the absorber was made. As described above, to reduce the scattering correction, we limited this distance to about 1/2 inch by using bars of 1" x 1" square cross section.

The beam traversed these longitudinally, and particles reaching the edge of the bar escaped so that their ranges were not measured. The particles that remained in the rod for its entire length traversed straighter paths, and the correction obviously is less for them than for particles with unrestricted paths. The geometry also insured that we need consider only small-angle Coulomb scattering. A large nuclear deflection would cause the particle to emerge from the side of the absorber. In order to get an estimate of the true range in this case, model calculations have been made by means of a Monte Carlo method. The Lund university electronic computer SMIL was used and the computations directed by Dr. C. E. Fröberg.

We have assumed the following model: Protons enter a square rod along its axis. The length of the rod equals the measured practical range of 750 Mev protons in the material. The cross section of the rod is 1" x 1". We choose a scale where the length of the rods is 100 units. In the same units the widths of the different rods are:

Al = 2.52 , Cu = 7.20 , Pb = 6.96 , and U = 11.12 .

We divide the rods up into 102 cells of decreasing length in the following way:

Number	Length	Σ Length
2	5	10
10	3	30
30	1	30
60	.5	30
Sum 102		100

The particle which originally entered the rod on the axis and parallel to it is deflected in the various cells and we assume in the following that it changes its direction discontinuously when passing from one cell to the next. We use an orthogonal system of coordinates with the x-axis in the direction of the motion of the proton when entering the cell. According to equation 2.17.6 in Rossi's[10] book the probability of finding a particle which has travelled the distance x in the interval $(y, y+dy)$ and with the direction between θ_y and $\theta_y+d\theta_y$ is

$$P(x,y,\theta_y)dyd\theta_y = \frac{2\sqrt{3}}{\pi\theta_s^2 x^2} \exp\left[-\frac{4}{\theta_s^2}\left(\frac{\theta_y^2}{x} - \frac{3y\theta_y}{x^2} + \frac{3y^2}{x^3}\right)\right] dy\, d\theta_y \quad .$$

One makes the change of variables:* $x = 2\sigma^2/\theta_s^2$; $y = 2(\sigma^2/\theta_s^2)\vartheta_y$;

$\theta_y = \chi_y + (3/2)\vartheta_y$, so that $dyd\theta_y = 2(\sigma^2/\theta_s^2)\, d\vartheta_y\, d\chi_y$.

Then by direct substitution, the new distribution function is:

$$Q(\sigma, \vartheta_y, \chi_y)d\vartheta_y\, d\chi_y = \frac{\exp(-3\vartheta_y^2/2\sigma^2)}{(2\pi\sigma^2/3)^{1/2}}\, d\vartheta_y \cdot \frac{\exp(-2\chi_y^2/\sigma^2)}{(\pi\sigma^2/2)^{1/2}}\, d\chi_y \quad .$$

* We thank Dr. S. B. Nilsson, Lund for advice in this matter.

The variables ϑ_y and χ_y are independently normally distributed with variances of

$$\sigma^2_{\vartheta} = \sigma^2/3 \qquad \text{and} \qquad \sigma^2_{\chi} = \sigma^2/4$$

For the different cells we choose ϑ_y and χ_y at random from normal distributions with the appropriate σ's. If we omit the index y, we get for the projection of the trajectory on the xy plane a series of values

$$\vartheta_1, \chi_1, \vartheta_2, \chi_2, \ldots \vartheta_n, \chi_n, \ldots$$

From these we calculate the angle φ_n, which the projection makes with the x-axis in cell n and its direction of motion on entering cell n, given by an angle ψ_n. We do the same for the projection on the xz plane. The value σ has been calculated for each cell from

$$\theta_s^2 = 16\pi N \frac{Z^2}{A} r_e^2 \left(\frac{m_e c}{\beta p}\right)^2 \ln \left[196\, Z^{-1/3} (Z/A)^{1/6}\right]$$

(Rossi, 2.16.4) .

We can now calculate the distance between the points where the particle enters and leaves the cell. In order to take into account the fact that the particle does not travel on a straight line but is scattered inside the cell we apply for each cell the appropriate correction α_n calculated according to Mather and Segrè[4].

When calculating the true range SMIL starts in cell number one and goes along producing its own random numbers and using the corresponding values of σ_n and α_n.

As soon as a particle escapes from the rod through one of its side surfaces the calculation is broken off. The machine makes a new attempt, registering the number of the cell from which the escape took place. A supplementary condition has been that only particles, which reach the end of the rod at an angle of less than 45° to the axis shall be included. Nuclear scattering has not been taken into account. A cut-off at 3.3 standard deviations has been applied.

The results of the Monte Carlo calculations are:

750 Mev Proton Range Corrections

Element	Attempts	Successful attempts	Ratio	Correction %
Al	1431	100	14.3:1	0.076 ± 0.003
Cu	1356	400	3.4:1	0.228 ± 0.005
Pb	2311	200	11.6:1	0.518 ± 0.013
U	983	200	4.9:1	0.696 ± 0.019

Figure 6 shows the distribution of escaping particles along the copper rod. Figure 7 shows the distribution of the individual range corrections.

In order to check the correctness of the calculations we also computed the correction for an infinitely wide copper rod and got the value 0.458 ± 0.013%. This agrees well with a value 0.45% obtained from Mather and Segrè's formula.

The corrected ranges measured in this experiment are given in Table II.

TABLE II

The Absorbers Used, the Approximate Energy Interval They Encompassed, and Their Measured Copper Equivalents in g/cm^2.

Al	Cu.Eq.	Ratio	Pb	Cu.Eq.	Ratio	U	Cu.Eq.	Ratio	Em	Cu.Eq.	Ratio	Energy Interval (Mev)
273.29	314.91	0.8678	415.62	314.91	1.3198	432.50	314.91	1.3734				750 - 0
79.01	89.90	0.8789	118.73	90.20	1.3162	121.53	89.68	1.3552	94.644	94.20	1.0026	I (750 - 600)
71.47	81.27	0.8794	108.71	82.32	1.3205	111.49	82.10	1.3580	85.831	85.26	1.0067	II (600 - 450)
61.34	69.67	0.8804	93.67	70.76	1.3238	94.60	68.86	1.3738	73.346	72.61	1.0101	III (450 - 300)

VI. THE RANGE STRAGGLING

The distribution of proton endings in the plates was recorded. Owing to a small asymmetrical background, as shown in Fig. 5, the high energy side of the distribution was nearly gaussian, but the other side was slightly distorted. It was found that the straight line obtained from the high energy part of the curve when the data were plotted on "normal-distribution" graph paper gave reliable estimates of the apparent range straggling.

The percentage straggling is given in the first row of Table III. The second row lists what the standard deviation of the ranges would be were the sole straggling effect that caused by scattering. The third row is the Bohr straggling as calculated by Sternheimer[11]. The residue must be attributed to the energy dispersion of the primary beam, effects of energy losses to nuclei, inexact correction for scattering,

TABLE III

Range Straggling Effects.

Standard deviations expressed in percent of mean range.

[illegible]	Al	Cu	Pb	U
Observed Total	1.11	1.30	1.33	1.57
Scattering Effect	0.03	.1	.2	0.25
Bohr Straggling	0.95	0.99	1.06	1.08
Residue	0.58	0.83	.76	1.11

and perhaps other unknown effects. While the statistical reliability of these data is not high, a range straggling of perhaps 0.6 - 0.8 % could be assigned to energy dispersion of the beam. The extra straggling in uranium may have statistical significance.

In spite of the large thicknesses of matter traversed by these protons, the straggling does not show any clear influence of nuclear collisions. An interaction causing nuclear excitation generally is a catastrophic event leading to a substantial loss of energy, and one in which the particle is normally deflected out of the good-geometry beam.

VII. STOPPING POWER RESULTS

What we obtained in this experiment were the mass stopping powers, for several energy intervals, of Al, Pb, U and emulsion relative to copper. The total ranges in Al, Cu, Pb and U were also observed. The proton energy was known only insofar as it can be inferred from these ranges.

In Table II we have listed each absorber and its observed copper equivalent. These figures enable us to calculate the mass stopping powers relative to copper. Because we have also measured Al/Cu and emulsion/Cu ratios all our results can almost as well be related to Al or emulsion. The ranges in the aluminum alloy have been converted to range in pure aluminum using Bakker and Segrè's relative stopping powers. The emulsion absorbers have also been adjusted to the equivalent absorber of standard emulsion having a density of 3.815 g/cc, assuming that the density change was caused by loss of moisture.[7]

In Table II the measurement uncertainties are not given separately for each entry because the situation, as explained below is rather complicated. Each measurement consisted of the determination of a range either in a pure material or in a two-component absorber. To find the statistical error in this part of the measurement, we referred to the numerous measurements of the range in pure copper that were carried out alternately with other runs. These ranges have a standard deviation of 0.09 g/cm^2 for a single determination.

In addition, there are small uncertainties in the density measurements, as discussed above. Probably additional errors were introduced because the geometry of the experiment could not be made precisely the

same for the various absorbers. They were not all of the same size. Finally, the scattering correction is only approximate. The typical error in measurement, therefore, is perhaps ≈ 0.2 g/cm^2 of copper.

VIII. DETERMINATION OF MEAN EXCITATION POTENTIALS

In this experiment total ranges were measured and very thick "foils" were employed for the differential stopping power measurements. They produced substantial changes in the particle velocities, so that a differential energy loss formula is not applicable. Ranges and range differences were therefore used to determine mean excitation potentials.

H. Bichsel[12] has calculated theoretical proton ranges in the materials which we adopted for this study. He assumed a number of different mean excitation potentials, I. For each choice of I, the range integration was made for a) no shell corrections, b) K and L shell corrections according to Walske[13] and c) K and L shell corrections, plus trial corrections for other shells. Attempts to fit the low-energy empirical data were made using these higher shell corrections.

There is rather general agreement that 163 e.v. is close to the true mean excitation potential of Al[14,15,16]. When the range of a 750 Mev proton in aluminum was calculated using this value of I, the presence of Walske's corrections was found to produce a change in the range of only a part in 3000, so that it is unlikely that any inadequacy of the shell corrections could seriously affect the range in aluminum. We therefore assume that this range provides an absolute measure of the beam energy. It implies that the beam energy was 752.2 Mev.

With this beam energy, we interpolate Bichsel's calculations, and obtain mean excitation potentials for the other absorbers from the observed total ranges. The results are shown in Table IV in which the apparent mean excitation potential is calculated with and without Walske's corrections.

Table IV

Mean Excitation Potentials in e.v. Derived from Total Ranges

	Copper	Lead	Uranium
No corrections	325	842	935
Walske's corrections for K & L shells	323	826	917

While they are not large, evidently some allowances must be made for shell effects, even at 750 Mev. According to an estimate of Bichsel[12], M and N shell corrections will be about one half the magnitude of the K and L shell corrections. If we assume that this is correct, the respective values 322 , 818 , and 908 e.v. are our estimates of the mean excitation potentials of copper, lead and uranium.

In addition to total ranges, Table II lists 12 ratios of range differences for three velocity intervals. These are essentially independent measurements. Because they are ratios of differences, however, the accuracy deteriorates, and the relative error may be several fold larger. It is perhaps wisest, therefore, to use these values chiefly as checks of our other results. For this we have interpolated the tables of Bichsel that were calculated with Walske's corrections. We used the mean excitation potentials derived with shell corrections from the total ranges. Theoretical values of the differential stopping power ratios were found in this way for all the absorbers except emulsion. For emulsion, we used the table of Barkas[6], which was calculated with Walske's K and L shell corrections and a mean excitation

potential of 331 e.v. The results are given in Table V. The agreement is reasonably good. In only one case does the difference exceed 1%. On the other hand, there is evidence that systematic effects may be present. The theoretical ratios for Al and Pb seem low, while those for U and emulsion are in good agreement with the measurements. The entries in the table would give no indication of systematic effects if the mean excitation potential of Al and Pb were raised a small amount, or those of Cu, U, and emulsion similarly lowered.

Table V

Measured and Calculated Stopping Power Ratios.

The theoretical calculations used mean excitation potentials as follows:

Al, 163; Cu, 323; Pb, 826; U, 917; Emulsion, 331 e.v.

Walske's corrections have been made.

	Al/Cu	Pb/Cu	U/Cu	Emulsion/Cu
750 - 600 Mev (Exp.)	.8789	1.3162	1.3552	1.0026
Theoretical	.8729	1.3064	1.3588	1.0075
600 - 450 Mev (Exp.)	.8794	1.3205	1.3580	1.0067
Theoretical	.8706	1.3123	1.3662	1.0073
450 - 300 Mev (Exp.)	.8804	1.3238	1.3738	1.0101
Theoretical	.8677	1.3202	1.3763	1.0079

Of course, to do so is impossible while maintaining the measured total ranges as a constraint. The internal consistency of the measurements, therefore, seems to be incomplete. A possible alternative is that the theoretical curves, on which we have leaned heavily, may be at fault. There is no evidence from the experimental data for a velocity-dependent

systematic error, however.

The magnitude of the discrepancy can be illustrated by the ratios for emulsion. If emulsion is compared with Al through the ratios of Al to Cu and emulsion to Cu, we find that the emulsion mean excitation potential would have to be reduced to 304 e.v. for agreement. On the other hand, raising the mean excitation potential of Al to 178 e.v. also would bring about agreement.

The Al to emulsion ratio obtained in this way is subject to a number of errors and may represent an extreme fluctuation. It could be caused by small errors in more than one measurement that have in this case been additive.

As reported in a preliminary account of this experiment[17] our data generally confirm the shape of the I/Z vs Z curve found by Bakker and Segrè. Their data, of course, are to be normalized to $I_{Al} = 163$ e.v. Whereas I/Z = 12.5 for Al, we find that it falls to 11 for copper and to 10 for lead and uranium.

IX. REMARKS ON THE EMULSION STANDARD

Because it is much needed for measurements of reaction and disintegration energies of elementary particles, the range-energy relation in emulsion has assumed a special importance. It is the only material in which absolute momentum and range measurements have been made at velocities as high as those of this experiment.[7]

Other measurements, including this one, rely on the theoretical extrapolation of low-energy measurements for an absolute standard. Particle ranges measured in emulsion, while beset with certain special problems, also have an advantage in being free of the scattering error. The range is simply the visible length of the particle path in emulsion, and is easily rectified.

This experiment relates the stopping power of emulsion to that of copper in three velocity intervals. These three ratios, which are independent of each other, do not confirm well the measurements of Heinz[18] at a lower velocity. At a proton energy which we now believe to have been 336.7 Mev., he measured an emulsion/copper range ratio of $0.990 \pm .003$. On the other hand, at 208 Mev DeCarvalho and Friedman[19] found the ratio to be 1.005 ± 0.006, in agreement with what would be expected from our data. If we take the value 323 e.v., derived above, for the mean excitation potential of copper with Walske's corrections, then our emulsion stopping power ratios to copper give for emulsion a mean excitation potential of 328 e.v., in excellent agreement with the value of 331 e.v. implied by the absolute range-momentum measurements.[6]

In emulsion, a number of systematic effects can be introduced in the measurement of track-lengths. Corrections were made for them in establishing the range-energy relation[7]. They include, for example, the track-length lost between pellicles, and the distortion caused by compression of emulsion. Such effects do not enter as corrections in this experiment. It was recommended in connection with the emulsion range table[6], that the method of applying corrections be the same as that used in measuring the ranges of Barkas et al.[7] Systematic errors then are not introduced in tracing particle tracks through the emulsion. When compared with the ranges measured in this experiment, however, systematic differences still can enter. All the corrections made in Ref. 7 were in the direction to increase their tabulated range. It is possible, if there remains a measurable systematic error, that it may be one of overcorrection: that the tabulated emulsion ranges may be too long when compared with ranges measured by the method of this experiment or by track-tracing without applying corrections.

To study this possibility, we shall review the relevant published measurements.

The ranges of meson secondaries from K-meson decay were measured in a number of researches.[20,21,22,23] With the present best values of the masses of K, π and μ mesons,[24] the expected ranges are 11.86 centimeters and 20.96 centimeters, respectively, for the $K_{\pi 2}$ and $K_{\mu 2}$ modes. The weighted averages adjusted for emulsion density, but not including all the corrections employed in preparing the range table, are 11.72 ± 0.05 and 20.81 ± 0.08 centimeters.

no TP The correction for radiative decay, which tends to lower the measured ranges also has not been made. The differences here are 1.2 and 0.7 percent.

A test was made of the range tables at very high energies by Feldman[25]. For pions with an energy equivalent to protons of 1600 Mev, she measured a range that was 1.005 ± 0.010 times that given by the emulsion range table.

Friedlander et al.[26] made direct comparisons of emulsion with aluminum at velocities somewhat lower than those of our experiment. For protons of nominal energy 146.5 Mev, they measured a median range of 60.13 ± 0.20 millimeters in emulsion of density 3.791 ± 0.004 g/cc. When aluminum absorbers of 6.0805 g/cm^2 and 11.4864 g/cm^2 were successively placed in the beam the ranges in emulsion were reduced to 41.42 ± 0.17 and 25.18 ± 0.21 millimeters, respectively. These measurements did not include adequate scattering corrections, and total ranges are therefore subject to doubt. Differential energy loss measurements are not sensitive to them, however, and we can deduce Al/emulsion ratios as follows from their paper:

146.5 - 87.4 Mev	$.8669 \pm 0.0069$
146.5 - 117.9 Mev	$.857 \pm 0.012$

From the shell-corrected Al ranges, and the emulsion range table, these ratios are expected to be 0.847 and 0.849, respectively. Agreement could be reached by reducing the mean excitation potential of emulsion to 307 ± 10 ev.

The mass of the Σ^+ hyperon is best determined from the reaction $\Sigma^+ \longrightarrow p + \pi^0$. The range of the proton is in an interval where the range-energy relation is thought to be well known. The pion range of the alternate mode of decay $\Sigma^+ \longrightarrow n + \pi^+$ has been measured[27]. It

is 9.2484 ± 0.049 centimeters. Using the mass of the Σ^+ hyperon found from the proton decay mode, the pion range is expected to be 9.3175 centimeters. Again the measured range is low by about 3/4 percent. The radiation correction, which has not been made, would tend to reduce the measured range below this predicted value.

Recently Zrelov and Stoletov[28] measured the range of 658 Mev protons in copper using an experimental arrangement very similar to that of Mather and Segre. They found a range of 257.6 ± 1.2 g/cm^2. From this range they obtain a mean excitation potential for copper of 305 ± 10 ev. Using the same data, with Bichsel's table we obtain 309 ± 11 ev. No allowance for a density-effect correction was made in deriving this figure, although according to Sternheimer[29] a small effect exists. While they did not make the measurement in "good geometry" this appears to be an excellent measurement. It must be taken as further evidence that the mean excitation potential of copper (and emulsion which is tied to it by our measurements) is somewhat lower than our total range measurement would indicate.

In spite of the excellent accord we found in our total range measurements, these various pieces of evidence lead us to believe that the emulsion range table overestimates high-velocity ranges by perhaps 1/2 %.

In carrying out this experiment we were aided by the helpful cooperation of the cyclotron crew under James T. Vale. To Dr. C. E. Fröberg and Mrs. K. Kjällquist we are indebted for the SMIL calculations. Mr. J. C. Wells helped both with microscopy and calculations, and Eugene H. Huffman

made the chemical analysis of the aluminum alloy. The scanning of the emulsion that recorded the protons penetrating the large copper absorber was carried out by Mr. Louis Enos. S.v.F. would like to thank the Lawrence Radiation Laboratory for the generous hospitality shown to him and the Royal Physiographie Society of Lund for financial support. We are most grateful to Dr. H. Bichsel for the use of his range tables.

APPENDIX

The "pencil beam" prepared for the range experiment was studied in some detail as it was brought to rest in a large copper block. Emulsion layers embedded in the copper were used as detectors so that the lateral spreading, angular distribution, and range distribution were obtained. For scanning this emulsion we are indebted to Mr. Louis T. Enos.

The observations may be summarized as follows: As the beam traversed the copper it was scattered and attenuated. The mean attenuation cross section of the copper nucleus was found to be 7.2×10^{-25} cm^2. The range on the beam axis was $314.9 \pm .3$ g/cm^2. The range straggling was 2.94 g/cm^2 when measured on the axis. The mean depth of penetration diminished with distance from the beam axis, apparently in a roughly linearly way so that the range 5 centimeters off the axis was reduced by 3.6 g/cm^2. The straggling of these off-axis protons was increased perhaps 40 percent also. The spreading of the beam can be crudely described as follows: Let $\rho_{1/2}$, $\rho_{1/10}$ and $\rho_{1/30}$ be the distances from the axis where the density of the beam is reduced respectively to 1/2, 1/10, and 1/30 of that on the axis. Then as the beam penetrated the copper these distances increased with the depth of penetration, S, according to Table VI.

TABLE VI

S (g/cm^2)	$\rho_{1/2}$ (cm)	$\rho_{1/10}$ (cm)	$\rho_{1/30}$ (cm)
68.8	0.28	0.52	0.7
114.5	0.42	0.82	1.1
188.3	0.80	1.6	2.1
275.5	1.7	3.4	5.1

The median projected angle made by the beam particles with the axis varied linearly with the distance off the axis. It amounted to 3° per centimeter at a depth of penetration of 296 g/cm^2, where the width of the beam was near maximum. The projected angular distribution of the beam at this depth of penetration had a standard deviation of 5.0° on the beam axis and increased to 11° at a point 5 centimeters off the axis. It remained nearly flat for about 2 centimeters on either side of the axis.

The full details of these observations are too lengthy for presentation here. More information can be obtained from one of us (MFB).

FIGURE CAPTIONS

Figure 1: The 184-inch cyclotron proton beam. Features mentioned in the text are labeled.

Figure 2: Shape of the wedge absorbers. The dimensions are given in Table I.

Figure 3a and 3b: Beam structure at entrance to magnet M-2, before and after eliminating beam B'.

Figure 4a and 4b: Contact prints showing, respectively, the actual size of the beam at the entrance to collimator C-3, and as it entered the absorber.

Figure 5: The range distribution of the beam in copper. The actual distribution is shown as a solid line. The dashed portion is symmetrical with the high energy side of the peak.

Figure 6: Distribution of the distance from the point where the particle entered the copper rod to the point where it escaped. The distributions found for the other absorbers were similar.

Figure 7: Distributions of range shortening caused by scattering. The range reduction is expressed in percent of mean range. The origin, which is labeled 100.00, is the point reached by an unscattered particle.

REFERENCES

1. J. Lindhard and M. Scharff, Kgl. Danske Videnskab. Selskab, Mat. - fys. Medd. 27, No. 15 (1953).

2. W. Brandt, "Energy Loss and Range of Charged Particles in Compounds", du Pont Radiation Physics Laboratory Report, July, 1960.

3. C. J. Bakker and E. Segrè, Phys. Rev. 81, 489 (1951).

4. R. Mather and E. Segrè, Phys. Rev. 84, 191 (1951).

5. For example H. Bichsel, R. F. Mozley and W. A. Aron, Phys. Rev. 105, 1788 (1957).

6. W. H. Barkas, Nuovo Cimento 8, 201 (1958).

7. W. H. Barkas, Paul H. Barrett, Pierre Cüer, Harry Heckman, Frances M. Smith and Harold K. Ticho, Nuovo Cimento 8, 91 (1958).

8. Sten von Friesen and W. H. Barkas, Lawrence Radiation Laboratory Report, UCID-613, Jan., 1959.

9. H. Bichsel and E. Uehling, Phys. Rev. 119, 1670 (1960).

10. B. Rossi, "High-Energy Particles", Prentice Hall, New York, 1952.

11. R. Sternheimer, Phys. Rev. 117, 1621 (1960)

12. H. Bichsel, Private correspondence. We are much obliged to Dr. Bichsel for being permitted to use his tables before their publication.

13. H. C. Walske, Phys. Rev. 101, 940 (1956).

14. D. C. Sachs and J. R. Richardson, Phys. Rev. 89, 1163 (1953).

15. K. R. MacKenzie, "Penetration of Charged Particles in Matter", Report No. 29, Nuclear Science Series, National Research Councils Publication 729.

16. H. Bichsel, Phys. Rev. 112, 1089 (1958). Also H. Bichsel in ref. 15.

17. S. von Friesen and W. H. Barkas, Bull. Am. Phys. Soc. 4, 369 (1959).

18. Otto Heinz, Phys. Rev. 94, 1728 (1954).

19. H. G. deCarvalho and J. I. Friedman, Rev. Sci. Inst. 26, 261 (1955).

20. D. M. Ritson, A. Pevsner, C. S. Fung, M. Widgoff, G. T. Zorn, S. Goldhaber and G. Goldhaber, Phys. Rev. 101, 1085 (1956).

21. R. W. Birge, D. H. Perkins, J. R. Peterson, D. H. Stork, and M. N. Whitehead, N.C. 4, 834 (1956).

REFERENCES (cont.)

22. G. Stack collaboration, J. H. Davies et al., N.C. Suppl. 4, 398 (1956).

23. J. Crussard, V. Fouche, J. Hennessy, G. Keyas, L. LePrince Rinqust, D. Morellet and F. Renard, N. C. Suppl. 3, 731; 4, 1195 (1956).

24. W. H. Barkas and A. H. Rosenfeld, UCRL-8030, Revised Sept., 1960.

25. R. Feldman, Lawrence Radiation Laboratory Report, UCRL-3802 (1957).

26. M. W. Friedlander, D. Kiefer and M. G. K. Menon, N. C. 5, 461 (1957).

27. J. N. Dyer, W. H. Barkas, H. H. Heckman, C. J. Mason, N. A. Nichols and F. M. Smith, Bull. Amer. Phys. Soc. 5, 224 (1960). For more details see J. N. Dyer, UCRL-9450.

28. V. P. Zrelov and G. D. Stoletov, Soviet Physics JETP, 36 (9) 461 (1959).

29. R. Sternheimer, Phys. Rev. 58, 854 (1952).

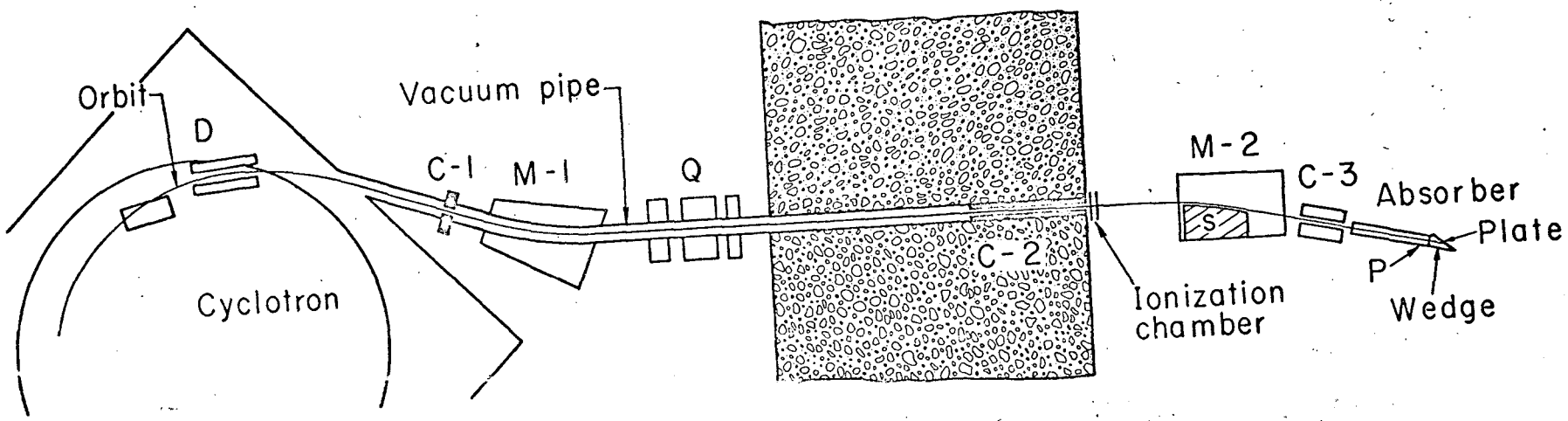
Orbit
D
Cyclotron
Vacuum pipe
C-1
M-1
Q
C-2
Ionization chamber
M-2
S
C-3
Absorber
Plate
P
Wedge

Fig I

Fig. II

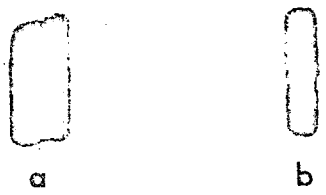

FIGURE 3

FIGURE 4

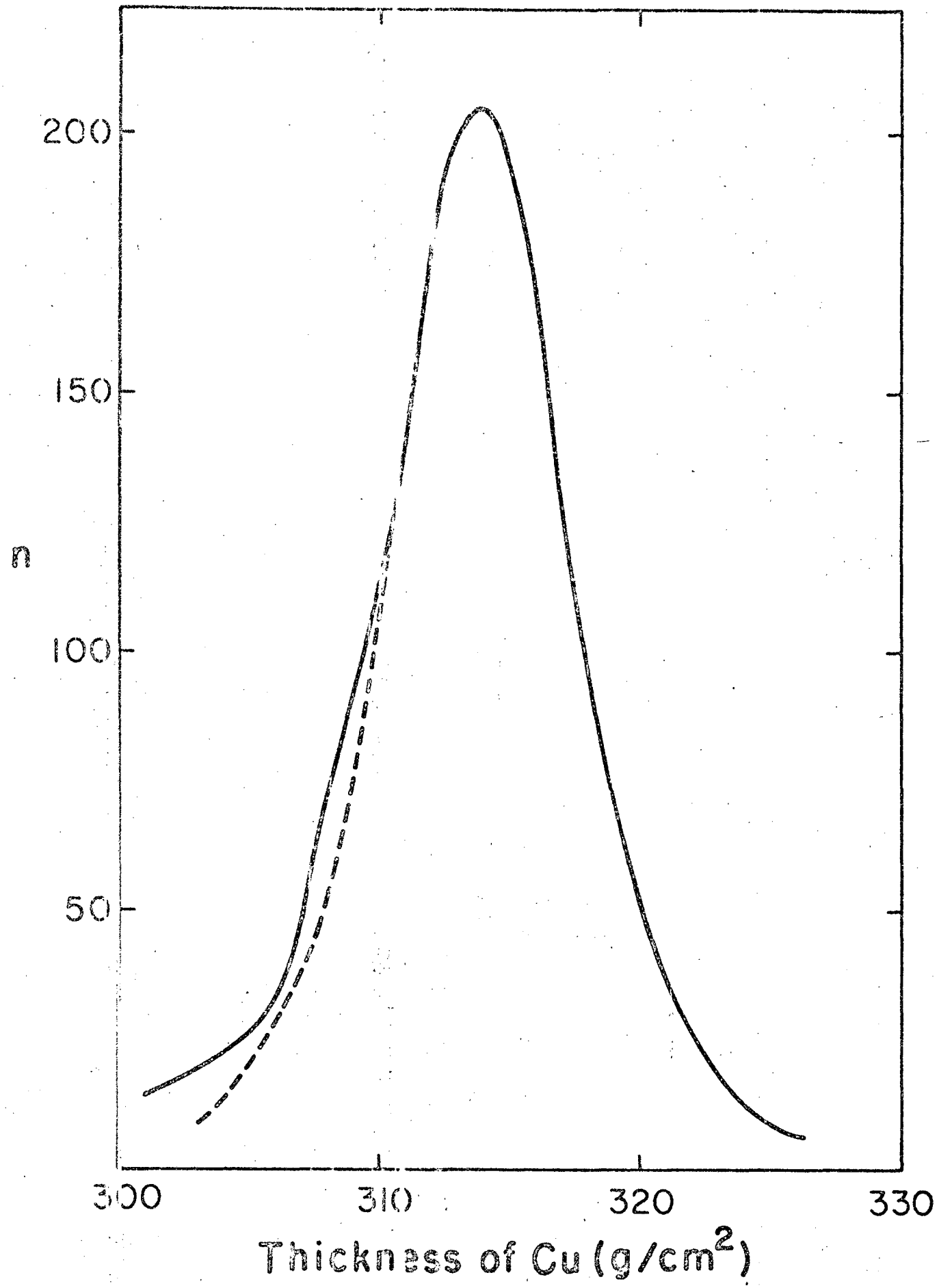

Fig 5

54

MU-18075

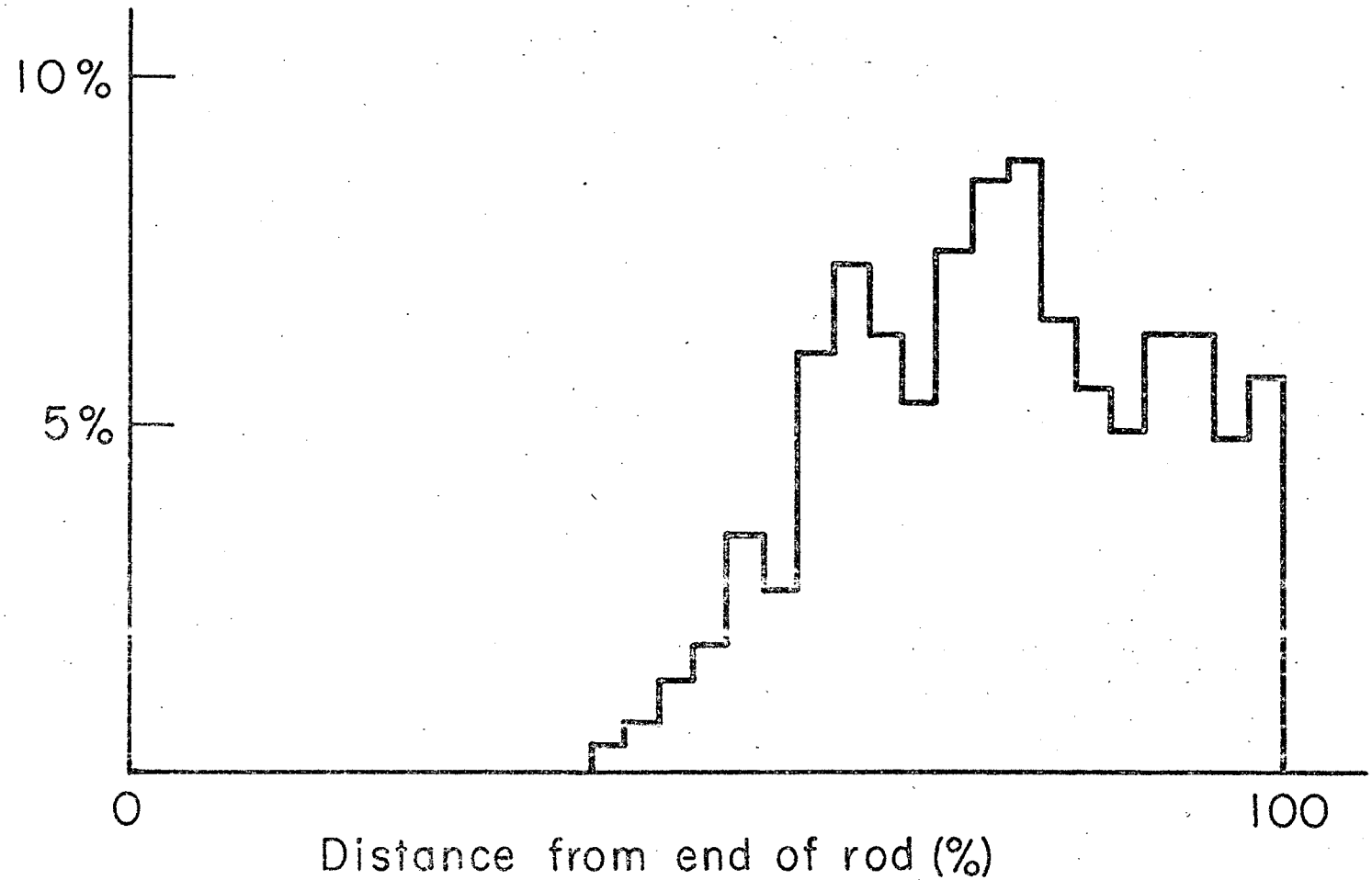

58717-1

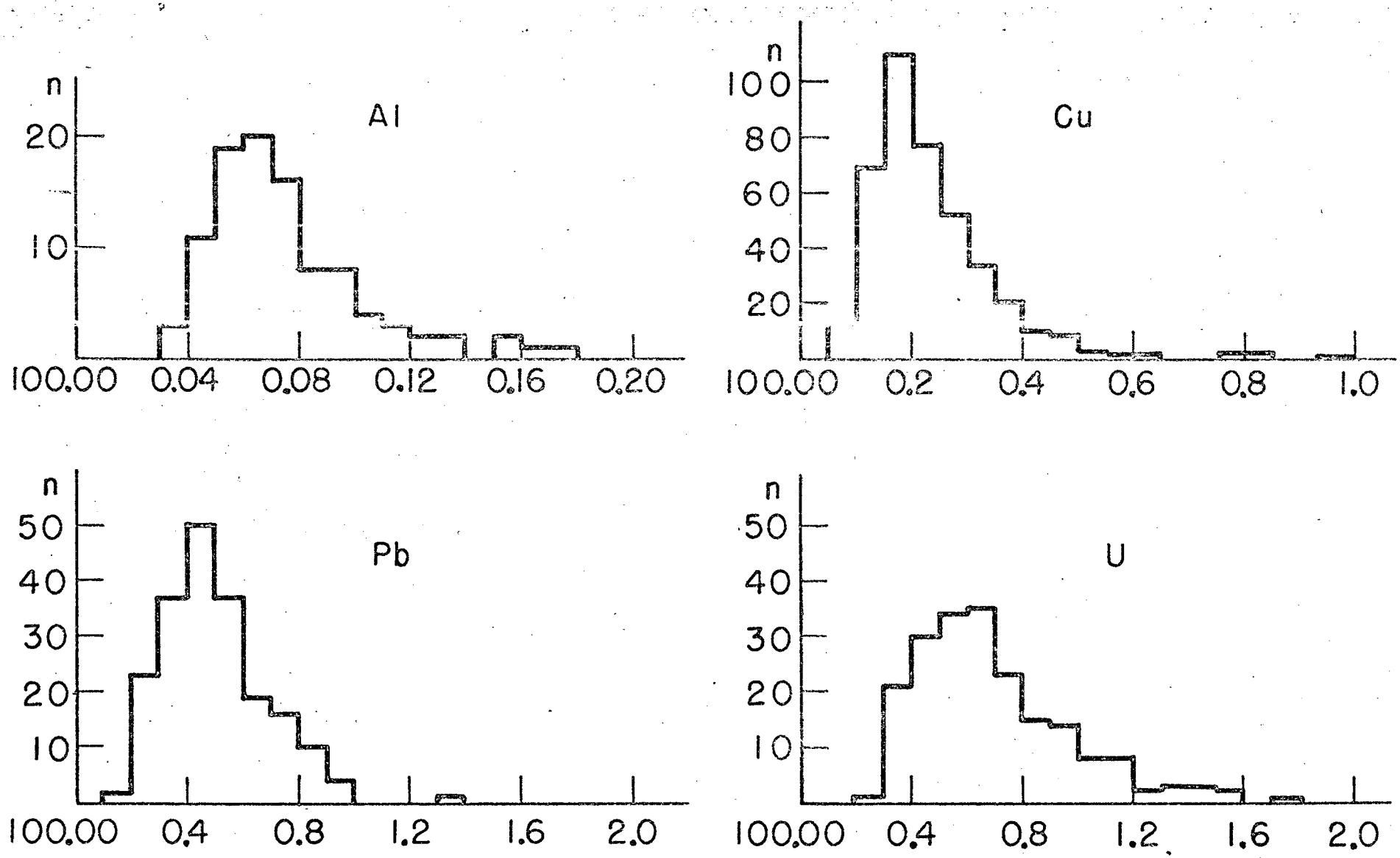
n
20
10
Al
100.00
0.04
0.08
0.12
0.16
0.20
n
100
80
60
40
20
Cu
100.00
0.2
0.4
0.6
0.8
1.0
n
50
40
30
20
10
Pb
100.00
0.4
0.8
1.2
1.6
2.0
n
50
40
30
20
10
U
100.00
0.4
0.8
1.2
1.6
2.0

Fig. 7

58719-1