UCRL-9035 Rev.

UNIVERSITY OF CALIFORNIA

Ernest O. Lawrence Radiation Laboratory

TWO-WEEK LOAN COPY

This is a Library Circulating Copy which may be borrowed for two weeks. For a personal retention copy, call Tech. Info. Division, Ext. 5545

BERKELEY, CALIFORNIA

DISCLAIMER

This document was prepared as an account of work sponsored by the United States Government. While this document is believed to contain correct information, neither the United States Government nor any agency thereof, nor the Regents of the University of California, nor any of their employees, makes any warranty, express or implied, or assumes any legal responsibility for the accuracy, completeness, or usefulness of any information, apparatus, product, or process disclosed, or represents that its use would not infringe privately owned rights. Reference herein to any specific commercial product, process, or service by its trade name, trademark, manufacturer, or otherwise, does not necessarily constitute or imply its endorsement, recommendation, or favoring by the United States Government or any agency thereof, or the Regents of the University of California. The views and opinions of authors expressed herein do not necessarily state or reflect those of the United States Government or any agency thereof or the Regents of the University of California.

Prof. Group on Circuit Design (IRE)

UCRL-9035 Rev.

UNIVERSITY OF CALIFORNIA
Lawrence Radiation Laboratory
Berkeley, California

Contract No. W-7405-eng-48

CURRENT-SWITCHING CIRCUITRY

Jack Gilbert Salvador and D. O. Pederson

July 17, 1961

CURRENT-SWITCHING CIRCUITRY

Jack Gilbert Salvador and D. O. Pederson

Lawrence Radiation Laboratory
University of California
Berkeley, California

July 17, 1961

Abstract

This paper discusses a group of high-speed switching circuits using the basic current-switching mode of operation. Existing literature has described the steady-state analysis of the basic current-switching mode in performing numerous logical combinations. The first part of this paper presents a dynamic analysis of the basic current-switching mode. In previous work the assumption has been made that the dynamic switching characteristic of the circuit is that of a common-base amplifier with a current step applied to the emitter. When linear analysis techniques are used to find the natural frequencies present in the circuit, such an assumption argues that the gain-bandwidth product is the dominant natural frequency and therefore determines the switching time.

This paper shows that the basic current-switching mode is really an overdriven amplifier in a common-emitter configuration. Therefore the dominant natural frequency, which determines the switching time, is actually f_β, the short-circuit cutoff frequency in the common-emitter configuration. The comparison of switching-time estimates and experimental measurements, considering only the gain-bandwidth product, often shows agreement within less than a factor of two. The paper presents the reasons for this conformity but describes the errors introduced by considering the gain-bandwidth product alone.

The second part of this paper is the dynamic and steady-state analysis of a current-switching flip-flop. In existing literature authors have assumed

that the effect of the regenerative loop is negligible during switching and that the circuit switches in the basic current-switching mode. This paper shows that the natural frequency of the regenerative loop lies in the right-hand plane of the complex frequency plane, and is dominant during switching.

A conventional saturated Eccles-Jordan circuit is compared analytically and experimentally with the current-switching flip-flop. Switching time, pulse pair resolution, and repetition rate describe each circuit's operation.

Part I: Dynamic Analysis of Basic Current-Switching Mode

The basic current-switching circuit is shown in Fig. 1. The configuration is that of a differential amplifier with one input tied to a reference potential. If V_b is greater than V_{bb}, T_1 is "on" and T_2 is "off." If V_b is less than V_{bb}, T_1 is "off" and T_2 is "on." The circuit can be thought of as a current source and two current sinks with the transistors acting as directional switches. Since most transistors require only a few tenths of a volt base-to-emitter bias to be either on or off, the side to which the current is switched can be controlled by very small voltages.

Consider for a moment the transistor as a switch. The speed of response of a transistor as a switch is determined by the "alpha cutoff" frequency, where alpha cutoff is defined as the short-circuit cutoff frequency of the transistor in the common-base configuration. In any given circuit the time constant associated with the collector capacitance may limit switching speed before the alpha-cutoff limit is reached. When thinking of very fast response times one must also consider the delay due to minority-carrier storage when a transistor is in the saturated condition. In addition to these factors one must consider that for most configurations a transistor cannot be "overdriven" when switching from on to off, as it can be when switching from off to on.

Alpha cutoff and collector capacitance are marked functions of the steady-state operating point of the transistor. A curve of collector current versus alpha cutoff has a peak point at some value of collector current. Collector capacity, on the other hand, is an inverse-power function of the base-to-collector voltage. For optimum switching times, then the transistor should operate on a load line that has a large, fairly constant base-to-collector voltage and has current swings around the optimum value of collector current.

Now look again at Fig. 1. The load resistance can be chosen so that the collector-voltage swing is the same as the base-voltage swing. If the collector-supply voltage is several times the base swing, one has a reasonably constant base-to-collector voltage. The current source in the emitter is set at the optimum value to give a maximum alpha-cutoff frequency. Since the transistor is never saturated, the delay due to minority-carrier storage is eliminated. This means that when predicting the on-to-off time for the transistor one need consider only the operation of the transistor in the active region.

Figure 2 is a small-signal equivalent circuit of the basic current-switching configuration. The only energy-storage elements present in the circuit are the collector capacitances and the transistor-equivalent current generators. For a rough approximation the dominant-time-constant approach will be used to simplify the equivalent circuit. By eliminating the source of any time constant that is an order of magnitude away from the region of interest, one can obtain a rough approximation of switching times obtainable in a given circuit. This rough approximation will be called a "zero-order" approximation for the remainder of this paper.

The emitter resistors are smaller by an order of magnitude than the other resistances present in the circuit, so that they can be ignored. The time constants associated with the energy-storage elements are

collector capacitance: $$\tau_c = \left[\frac{(R_s + r_b')r_b'}{R_s + r_0'} + R_L\right] C_c,$$

transistor-equivalent current generator: $$\tau = 1/\omega_t .$$

For very fast transistors the collector-capacitance time constant is of the same order of magnitude as the time constant associated with the transistor. The effect of collector capacitance for these cases can be accounted for by

degrading the gain-bandwidth product by a degradation factor D. The degradation factor is a constant determined by the circuit and transistor parameters, and is defined for the current-switching configuration as[1]

$$D = 1 + \omega_t \left[\frac{(R_s + r_b')\, r_b'}{R_s + r_b'} + R_L \right] C_c .$$

Figure 3 is the simplified equivalent circuit for the basic current-switching configuration. This equivalent circuit neglects collector capacitance. The characteristic equation for the circuit during switching is

$$i_c(p) = \frac{\alpha_0\, \omega_t \left[(V_b - V_{bb})(p + \omega_t) + I_e\, r_b'(p + \omega_\beta) \right]}{(R_s + 2r_b')(p + \omega_\beta)(p + \omega_t)} \qquad (1)$$

The natural frequencies given by Eq. (1) are ω_t and ω_β, the short-circuit gain-bandwidth product and the cutoff frequency, respectively, in the common-emitter configuration.

Equation (2) is the time-domain solution, assuming a step input, for collector current, neglecting initial conditions. It is obvious that the term containing ω_t is smaller by at least an order of magnitude than the term containing ω_β, and can be neglected with little error:

$$i_c(t) = \frac{\beta_0 (V_b - V_{bb})}{R_s + 2r_b'} \left[1 - \frac{1}{\alpha_0} \exp(-\omega_\beta t) + \frac{1}{\beta_0} \exp(-\omega_t t) \right] . \qquad (2)$$

There are several conclusions to be drawn from Eqs. (1) and (2). First, it is obvious that the dominant natural frequency during switching is ω_β. Second, the fast switching times obtainable from this circuit are a result of overdrive to the base of the transistor.

For fast switching times the quantity $\omega_\beta t$ in (2) is a small fraction. Therefore taking just the first two terms of the series expansion of the

exponential is a reasonable approximation. The result, ignoring the ω_t term, is

$$i^t(t) = \frac{(V_b - V_{bb})}{R_s + 2r_b'} \omega_\beta \beta_0 t \, . \tag{3}$$

Solving this equation for t, one has

$$t = \frac{i_c(t)(R_s + 2r_0')}{(V_b - V_{bb})\omega_\beta \beta_0} \, . \tag{4}$$

By definition the short-circuit gain-bandwidth product in the common-emitter configuration is

$$\omega_t = \beta_0 \omega_\beta \, .$$

Making this substitution in Eq. (4) gives the switching time in terms of the gain-bandwidth product,

$$t = \frac{i_c(t)(R_s + 2r_0')}{(V_b - V_{bb})\omega_t} \, . \tag{5}$$

Equation (5) explains why the approach used in earlier literature of a common-base configuration with a step of current applied to the emitter gave reasonable results in terms of predicted switching times.[8] The fallacy of previous work lies in the fact that it did not show that switching times are a function of the base-spreading resistance of the transistor as well as source impedance.

Since the driven transistor switches on as the reference transistor switches off, the turn-on and turn-off times respectively for a step input are

$$t = \frac{1}{\omega\beta} \ln \left[\frac{\beta_0 (V_b - V_{bb})}{\left[\beta_0 (V_b - V_{bb}) - 0.9 \; I_e (R_s + 2r_b')\right] a_0} \right] \, . \tag{6}$$

and

$$t = \frac{1}{\omega_\beta} \ln \left[\frac{\beta_0 (V_b - V_{bb} + I_e r_0' \left[1 - a_0\right])}{0.1 a_0 I_e (R_s + 2r'_0) - \beta_0 \left[I_e (R_s + r_0')(1 - a_0) - (V_b - V_{bb})\right]} \right] \quad (7)$$

Table I shows predicted switching times versus experimental switching times. Because of the extremely fast switching times the basic current-switching circuit is capable of, the experimental verification was made with slow transistors so that accurate measurements could be made.

The transistors (type 2N35) used for experimental work have the following parameters:

Short-circuit cutoff frequency in the common-emitter configuration:	f_β = 101 kc
Low-frequency current gain in the common-emitter configuration:	β_0 = 40
Short-circuit gain-bandwidth product in the common emitter configuration:	f_t = 4 Mc
Base-spreading resistance:	r_b' = 100 ohms
Source impedance:	R_s = 200 ohms

Part II: Dynamic and Steady-State Analysis of Current Switching Flip-Flop

Figure 4 shows a direct-coupled current-switching flip-flop. To direct-couple from the collector circuit of one transistor to the base of the other transistor a level shift is required. This particular circuit uses a so-called "zener" diode for a level-shifting device. By proper steady-state design the zener diode is always biased on; therefore, there is no loss of switching time or attenuation of signal in the level shifting network, since the dynamic impedance and effective capacitance of the turned-on zener are approximately zero.

Figure 4 shows the dc levels present in a typical circuit, assuming the circuit has been previously "set." The values given neglect ohmic drops in a forward-biased base-to-emitter junction. Only transistor T-2 is on once the circuit is actually set.

Figure 5 gives the dc levels in the circuit with a reset signal applied to the base of T-4. As can be seen, T-2 is now biased off and T-4 is on. The point of interest in this state is that T-3, which is the lock-in transistor for the "reset" condition, has 3/8 volt reverse bias from base to emitter, so that it is still in the off condition. If the base potential of T-4 now goes negative, the emitter, which is clamped to the base potential, also goes negative. When the emitter potential has reached a point slightly more negative than the base of T-3, T-3 turns on and clamps the emitter point to its base potential. Any further negative swing on the base of T-4 causes this transistor to be back-biased and turn off. The circuit is now in its second stable state, the reset position.

There are two important points to understand. The first is that the circuit does not actually assume a stable state until the reset (or set) pulse

is being removed. The second point is that for the purposes of dynamic analysis of switching times there are only two transistors active in the circuit at any one time.

Figure 6 is a small signal equivalent circuit of the flip-flop with the reset pulse applied. The assumption is made that the circuit has previously been set and that the reset pulse has brought T-4 into the active region. It must be noted that even though the analysis is presented for the reset condition, the same assumptions and results apply directly to the set condition using transistors T-1 and T-3 instead of T-2 and T-4. The equivalent circuit shown does not include the level-shifting network, since it does not contribute in any way to the dynamic response of the circuit but is presnet only to provide the correct dc levels.

The collector current of the driven transistor as a function of time is given by

$$i_c(t) = \frac{(1-2a_0)(V_{cc}-V_b)+(1-a_0)(1-a_0)(R_s+r_b')I_e+a_0 I_e r_b'}{(1-a_0)(R_s+2r_b')+R_L(1-2a_0)}$$

$$\times\left\{1-\frac{1}{a_0\left(1+\dfrac{R_L}{R_L+R_s+2r_b'}\right)}\exp\omega_t\left[a_0\left(1+\frac{R_L}{R_L+R_s+2r_b'}\right)-1\right]t\right\}. \quad (8)$$

The positive exponential clearly shows that (a) the circuit is regenerative during switching; and (b) the natural frequency associated with the regenerative loop is dominant during switching. (See Appendix II.) The dominant natural frequency has a value approximately equal to the gain-bandwidth product modified by a ratio of the circuit impedances.

For transistors with small values of r_b', Eq. (8) can be simplified to

$$i_c(t) = \frac{V_{cc} - V_b}{R_L} \left\{ 1 - \frac{1}{a_0 \left(1 + \frac{R_L}{R_L + R_s + r_b'} \right)} \right.$$

$$\left. \times \exp \left[a_0 \left(1 + \frac{R_L}{R_L + R_s + 2r_b'} \right) - 1 \right] \omega_t t \right\} . \tag{9}$$

Solving this equation for the 0-to-90% rise time, one has

$$t_{0\text{-}90\%} = \frac{1}{\left[a_0 \left(1 + \frac{R_L}{R_L + R_s + 2r_b'} \right) - 1 \right] \omega_t}$$

$$\times \ln \left(1 - \frac{0.9 a_0 I_e R_L}{V_{cc} - V_b} \right) \left(1 + \frac{R_L}{R_L + R_s + 2r_b'} \right) a_0 . \tag{10}$$

Once the rise time of a flip-flop has been established, the criterion of usefulness of any flip-flop as an element in a system is usually given in terms of pulse pair resolution and maximum repetition rate. Because of the small voltage swings used in this circuit, a criterion had to be established as to the minimum acceptable output. A collector voltage swing of 90% was established as the minimum required output.

The switching and memory criteria for conventional Eccles-Jordan flip-flops have been covered in detail in earlier work.[9] A conventional flip-flop was designed and circuit values minimized experimentally. This flip-flop was then used as a comparison circuit to determine the relative merits of the current-switching configuration.

Experimental Verification

The values of circuit components for the respective circuits are those shown in Figs. 4 and 7. All circuit measurements were made with a Tektronix 545 oscilloscope.

The gain-bandwidth product and the short-circuit cutoff frequency in the common-emitter configuration were measured in a simple amplifier with the base-to-collector voltage and the collector current set to the same values as used in the current-switching circuits.

The values of r_b' were determined by measuring the input impedance of the transistors in a common-emitter amplifier at a frequency equal to one-half the gain-bandwidth product. At this frequency or higher, the input impedance is approximately equal to the base-spreading resistance r_b'.

A set of four matched transistors was selected and the same transistors used in all circuits discussed.

Table II gives a comparison between experimental and predicted quantities for the Eccles-Jordan and current-switching flip-flops. All experimental results are within 20% of the predicted values. It should be noted that the predicted results are always better than the experimental results. This is as expected in view of the approximations made in deriving the equations for switching times.

If only the rise time of the circuit were considered, it would appear that the Eccles-Jordan circuit would be the best circuit to use. The major differences between the circuits become obvious when the pulse-pair resolution and the maximum repetition rates are compared. In terms of pulse-pair resolution there is a factor-of-four difference in the two circuits. However, the maximum continuous repetition rate is different by a factor of seven. Basically the wide differences in the last two quantities given can be attributed to the recovery time of the coupling capacitors. In the current-switching circuit, the only energy-

storage elements present are the transistors, therefore the frequency response and base spreading resistances of the transistors are the limiting quantities.

Another way of looking at the basic differences between the two circuits is as follows: in the current-switching circuit, as soon as the circuit is set, conditions are such that the circuit can become regenerative immediately if a reset pulse is applied. This is not true in the Eccles-Jordan circuit, since time must be allowed for the coupling capacitors to recover at least partially.

The main advantage of the Eccles-Jordan circuit lies in its simplicity. There are only two active devices present in the circuit. The advantage as far as transistor operation is concerned is in the low power dissipation by the transistor in the saturated condition. In the current-switching configuration the on transistor dissipates considerable power, as the collector-to-emitter voltage is about the same whether the transistor is on or off.

The advantages of the current-switching circuit from the point of view of transistor operation are: (a) the transistor never saturates; (b) collector capacitance can be minimized, since base-to-collector voltage is essentially constant; (c) only small voltage swings are required on the bases of the transistors, so that low-voltage transistors are easily used.

When a flip-flop is being considered as an element in a system, particularly a large one, the cost of the circuit must be considered. Here the current-switching flip-flop is at an obvious disadvantage. It requires four transistors and two zener diodes, whereas the Eccles-Jordan circuit requires only two transistors. But in systems such as large-scale computers in which extremely fast flip-flops are required, the current-switching flip-flop is finding increasing use.

APPENDIX I

Derivation of Equations Presented in Part I

The simplified equivalent circuit given in Fig. 3 is assumed to be a valid representation of the basic current-switching mode during switching. The assumptions and approximations necessary to arrive at Fig. 3 are explained in Part I of the paper.

The circuit equations are

$$i_{c1} = \alpha_n i_{e1}, \tag{A-1}$$

$$i_{c2} = \alpha_n i_{e2}, \tag{A-2}$$

$$i_{e1} + i_{e2} = I_e, \tag{A-3}$$

$$(V_b - V_{bb}) = i_{b1}(R_s + r_b') - i_{b2} r_b', \tag{A-4}$$

$$i_{b1} + \alpha_n i_{e1} = i_{e1}, \tag{A-5}$$

$$i_{b1} + \alpha_n i_{e2} = i_{e2} \tag{A-6}$$

In addition to the circuit equations, a one-pole approximation is assumed to be a reasonable representation of the roll-off of the transistor-equivalent current generator:

$$\alpha_n = \frac{\alpha_0 \omega_t}{p + \omega_t}, \tag{A-7}$$

$$\beta_n = \frac{\alpha_n}{1 - \alpha_n}, \tag{A-8}$$

$$\beta_n = \frac{\alpha_0 \omega_t}{p + \omega_\beta} \quad \text{where} \quad \omega_\beta = (1 - \alpha_0)\,\omega_t. \tag{A-9}$$

Solving the circuit equations for i_{c1} gives

$$i_{c1} = \frac{V_b - V_{bb}}{R_s + 2r_b'}\left(\frac{\alpha_n}{1 - \alpha_n}\right) + \frac{I_e r_b'}{R_s + 2r_b'}\,\alpha_n \quad . \tag{A-10}$$

Substituting (A-7) and (A-9) into (A-10) leads to

$$i_{c1} = \frac{a_0 \omega_t}{R_s + 2 r_b'} \left[\frac{(V_b - V_{bb}) p + (V_b - V_{bb}) \omega_t + I_e r_b' p + I_e r_b' \omega_\beta}{(p + \omega_t)(p + \omega_\beta)} \right] ; \qquad \text{(A-11)}$$

This is the characteristic equation.

Now, for $p = \frac{d}{dt}$, one has

$$\frac{d^2 i_{c1}}{dt^2} + \frac{d i_{c1}}{dt} (\omega_\beta + \omega_t) + i_{c1} \omega_\beta \omega_t$$

$$= \frac{a_0 \omega_t}{R_s + 2 r_b'} \left[(V_b - V_{bb}) \omega_t + I_e r_b' \omega_\beta \right] . \qquad \text{(A-12)}$$

Taking the Laplace transformation of (12) and solving again for i_{c1}, one obtains

$$i_{c1}(p) = \frac{\frac{a_0 \omega_t}{R_s + 2 r_b'} \left[(V_b - V_{bb}) \omega_t + I_e r_b' \omega_\beta \right] + \left[p^2 + p(\omega_t + \omega_\beta) \right] i_{c1}(0+)}{p(p + \omega_\beta)(p + \omega_t)} . \qquad \text{(A-13)}$$

From a partial-fraction expansion,

$$i_{c1}(p) = \frac{K_0}{p} + \frac{K_1}{p + \omega_\beta} + \frac{K_2}{p + \omega_t} , \qquad \text{(A-14)}$$

where

$$K_0 = \frac{\frac{a_0 \omega_t}{R_s + 2 r_b'} \left[(V_b - V_{bb}) \omega_t + I_e r_b' \omega_\beta \right]}{\omega_\beta \omega_t} , \qquad \text{(A-15)}$$

$$K_1 = \frac{\frac{a_0 \omega_t}{R_s + 2 r_b'} \left[(V_b - V_{bb}) \omega_t + I_e r_b' \omega_\beta - \omega_\beta \omega_t i_{c1}(0+) \right]}{-\omega_\beta (-\omega_\beta + \omega_t)} \qquad \text{(A-16)}$$

$$K_2 = \frac{\frac{a_0 \omega_t}{R_s + 2 r_b'} \left[(V_b - V_{bb}) \omega_t + I_e r_b' \omega_\beta - \omega_\beta \omega_t i_{c1}(0+) \right]}{-\omega_t (-\omega_t + \omega_\beta)} . \quad \text{(A 17)}$$

For small values of r_b' the following approximations valid:

$$(V_b - V_{bb}) \omega_t >> I_e r_b' \omega_\beta .$$

For "turn-on," $i_{c1}(0+) = 0$. Making this substitution and taking the inverse Laplace transform gives

$$i_{c1}(t) = \beta_0 \frac{(V_b - V_{bb})}{R_s + 2 r_b'} \left[1 - \frac{1}{a_0} \exp[-\omega_\beta t] \right] + \frac{1}{\beta_0} \exp(-\omega_t t). \quad \text{(A-18)}$$

Looking at (18), we see that the quantity $\frac{1}{a_0}$ is much greater than $\frac{1}{\beta_0}$, therefore the exponential containing ω_t is negligible:

$$i_{c1}(t) = \beta_0 \frac{(V_b - V_{bb})}{R_s + 2 r_b'} \left[1 - \frac{1}{a_0} \exp[-\omega_\beta t] \right] . \quad \text{(A-19)}$$

To find the equation for i_{c1} as the transistor is driven "off," consider

$$i_{c1}(0+) = a_0 I_e .$$

Equation (A-16) can be simplified to

$$K_1 = \frac{\frac{a_0}{R_s + 2 r_b'} [V_b - V_{bb}] - [1 - a_0] \; i_{c1}(0+)}{-(1 - a_0)} , \quad \text{(A-20)}$$

and

$$K_2 = \frac{\frac{a_0}{R_s + 2 r_b'} [V_b - V_{bb}] - [1 - a_0] \; i_{c1}(0+)}{\beta_0} . \quad \text{(A-21)}$$

For most circuit values, $\frac{[V_b - V_{bb}]}{R_s + 2r_b'}$ is of the same magnitude as $i_{c1}(0+)$. Therefore one can say

$$\frac{a_0 (V_b - V_{bb})}{R_s + 2r_b'} >> 1 - a_0 \quad i_{c1}(0+).$$

This means the contribution of the initial condition is negligible and (19) is valid for determining both on and off times for the driven transistor.

Since the basic current-switching configuration is not symmetrical, owing to the presence of source impedance, the collector current as a function of time of the reference transistor must be different from the driven transistor.

Starting with the general circuit equations, and proceeding in the same manner as described above, one finds the characteristic equation for $i_{c2}(p)$:

$$i_{c2}(p) = \frac{a_0 \omega_t^2 I_e R_s (1 - a_0) - a_0 \omega_t^2 (V_v - V_{bb})}{(R_s + 2r_b')(p)(p + \omega_t)(p + \omega_p)}$$

$$+ \quad \frac{i_{c2}(0+) p [p(R_s + 2r_b') + (R_s + 2r_b')(\omega_t + \omega_\beta)]}{(R_s + 2r_b')(p)(p + \omega_t)(p + \omega_\beta)} \quad . \qquad \text{(A-22)}$$

The partial-fraction expansion is

$$i_{c2}(p) = \frac{K_0}{p} + \frac{K_1}{p + \omega_t} + \frac{K_2}{p + \omega_\beta} \quad , \qquad \text{(A-23)}$$

where the constants have the values

$$K_0 = \frac{\beta_0 [I_e (R_s + r_b')(1 - a_0) - (V_b - V_{bb})]}{(R_s + 2r_b')} \quad , \qquad \text{(A-24)}$$

$$K_1 = \frac{a_0 \left[I_e (R_s + i_b')(1 - a_0) - (V_b - V_{bb}) \right] - i_{c2}(0+)(R_s + 2r_b')(1 - a_0)}{(R_s + 2r_b')a_0} \quad , \tag{A-25}$$

$$K_2 = -\frac{a_0 I_e (R_s + r_b')(1 - a_0) - (V_b - V_{bb}) - i_{c2}(R_s + 2r_b')(1 - a_0)}{(R_s + 2r_b')(1 - a_0)\, a_0} \tag{A-26}$$

for the off to on condition, $i_{c2}(0+) \approx 0$, therefore the reference transistor collector current as a function of time is given by

$$i_{c2}(t) = \frac{\beta_0 \left[I_e (R_s + r_b')(1 - a_0) - (V_{bb} - V_{bb}) \right]}{R_s + 2r_b'} \left\{ 1 + \frac{1}{\beta_0} \exp(-\omega_t t) - \frac{1}{a_0} \exp(-\omega_\beta t) \right\} \quad . \tag{A-27}$$

Again the term associated with ω_t, the gain-bandwidth product, is negligible.

Looking at the constant in Eq. (A-27) one can see that as source impedance becomes negligible, the circuit becomes symmetrical, and the current through both transistors is represented by (A-19).

APPENDIX II

Derivation of Equations Presented in Part II

The simplified equivalent circuit given by Fig. 6 is assumed to be a valid representation of a current-switching flip-flop during switching.

The circuit equations are

$$i_{b1} + \beta_n i_{b1} = i_{e1}, \tag{A-28}$$

$$i_{b2} + \beta_n i_{b2} = i_{e2}, \tag{A-29}$$

$$i_{e1} + i_{e2} = I_e , \tag{A-30}$$

$$i_{c1} = \beta_n i_{b1} + i_{b2} , \tag{A-31}$$

$$i_{c2} = \beta_n i_{b2} , \tag{A-32}$$

$$V_{cc} - V_b = i_{ci} R_L + i_{b2} r_b' - i_{b1}(R_s + r_b') . \tag{A-33}$$

In addition to the circuit equations, Eqs. (A-7) and (A-9) are assumed to be valid approximations of the transistor-equivalent current generator.

Solving the circuit equations for $i_{c1}(p)$, one finds the characteristic equation for switching:

$$i_{c1}(p) = \frac{\omega_t^2 \quad (1-2a_0)(V_{cc}-V_b) + (1-a_0)^2 (R_s + r_b') I_e + a_0 (1-a_0) I_e r_b'}{\left[\dfrac{R_L}{R_L + R_s + 2r_b'}\right] p(p+\omega_t) \left\{ p + \omega_t \left[1 - a_0 1 + \dfrac{R_L}{R_L + R_s + 2r_b'} \right] \right\}} \tag{A-34}$$

Again taking the partial-fraction expansion of (A-34), one has

$$i_{c1}(p) = \frac{K_0}{p} + \frac{K_1}{p+\omega_t} + \frac{K_2}{p + \omega_t \left[1 - a_0 \left(1 + \dfrac{R_L}{R_L + R_s + 2r_b'} \right) \right]} \tag{A-35}$$

where

$$K_0 = \frac{(1-2a_0)(V_{cc}-V_b)+(1-a_0)^2(R_s+r_b')I_e+a_0(1-a_0)I_e r_b'}{\left(\frac{R_L}{R_L+R_s+2r_b'}\right)\left[1-a_0\left(1+\frac{R_L}{R_L+R_s+2r_b'}\right)\right]} \quad , \qquad \text{(A-36)}$$

$$K_1 = \frac{(1-2a_0)(V_{cc}-V_b)+(1-a_0)^2(R_s+r_b')I_e+a_0(1-a_0)I_e r_b'}{\left(\frac{R_L}{R_L+R_s+2r_b'}\right)\left(-a_0\left[1+\frac{R_L}{R_L+R_s+2r_b'}\right]\right)} \quad , \qquad \text{(A-37)}$$

$$K_2 = \frac{(1-2a_0)(V_{cc}-V_b)+(1-a_0)^2(R_s+r_b')I_e+a_0(1-a_0)I_e r_b'}{\left(\frac{R_L}{R_L+R_s+2r_b'}\right)\left(1-a_0\left[1+\frac{R_L}{R_L+R_s+r_b'}\right]\right)\left(-a_0\left[1+\frac{R_L}{R_L+R_s+2r_b'}\right]\right)} \quad . \qquad \text{(A-38)}$$

For transistors with small values of r_b', base-spreading resistance, and assuming small values of source-impedance R_s, one can make the approximations

$$(1-2a_0)(V_{cc}-V_b) >> (1-a_0)^2(R_s+r_b')I_e \quad ,$$

$$(1-2a_0)(V_{cc}-V_b) >> a_0(1-a_0)I_e r_b' \quad .$$

Now consider the natural frequencies given by Eq. (A-34). The gain-bandwidth product is one natural frequency while the second natural frequency is essentially the gain-bandwidth product modified by a ratio of circuit impedances. There is one major difference, though: the modified gain-bandwidth product is a positive exponential for realistic values of circuit resistances. Except for times very near zero, the positive exponential is dominant,

therefore the time-domain solution for collector current, including the approximations listed above, is

$$i_{c1}(t) = \frac{(V_{cc} - V_b)}{R_L} \left\{ 1 - \frac{1}{\alpha_0 \; 1 + \left(\frac{R_L}{R_L + R_s \; 2r_b'} \right)} \exp\left[\alpha_0 \left(1 + \frac{R_L}{R_L + R_s + 2r_b'} \right) - 1 \right] \omega_t t \right\} . \tag{A-39}$$

BIBLIOGRAPHY

1. Class notes taken by the author for University of California graduate course Electrical Engineering 240, given at Berkeley in the fall semester, 1958, by Professor D. O. Pederson.
2. J. J. Ebers and J. L. Moll, Large-Signal Behavior of Junction Transistors, Proc. I.R.E. 42, 1761 (1954).
3. R. A. Henle and J. L. Walsh, The Application of Transistors to Computers, Proc. I.R.E. 46, 1240 (1958).
4. J. L. Moll, Large-Signal Transient Response of Junction Transistors, Proc. I.R.E. 42, 1773 (1954).
5. D. O. Pederson, Regeneration Analysis of Junction Transistor Multivibrators, IRE-AIEE 1955 Transistor Conference, IRE Transactions on Circuit Theory, June 1955.
6. A. I. Pressman, Design of Transistorized Circuits for Digital Computers (John F. Rider, Publisher, Inc., 116 West 14 St. N.Y., 1959).
7. J. L. Walsh, IBM Current Mode Transistor Logical Circuits, IBM Technical Publication (no date).
8. H. S. Yourke, Millimicrosecond Transistor Current-Switching Circuits, IRE Transactions on Circuit Theory (PGCT), Sept. 1957.
9. D. K. Lynn and D. O. Pederson, Switching and Memory Criteria in Flip-Flops, 1960 IRE International Convention, Vol. 8, Part 2, pp. 3-10.

Table I

Switching times for transistors

	Predicted (nsec)	Experimental (nsec)
Driven transistor	110	120
Reference transistor	123	120

Table II

Comparison of flip-flop circuits

	Eccles-Jordan		Current-switching	
	Predicted	Experimental	Predicted	Experimental
Rise time, 0-90% (nsec)	102	130	115	130
Pulse-pair resolution (nsec)	460	500	115	135
Maximum repetition rate (Mc)	1.09	0.910	8.7	7.2

FIGURE LEGENDS

Fig. 1. Basic current-switching circuit.

Fig. 2. Small-signal equivalent circuit.

Fig. 3. Simplified equivalent circuit.

Fig. 4. Current-switching flip-flop; circuit previously set.

Fig. 5. Current-switching flip-flop; reset signal applied to base of T-4.

Fig. 6. Small-signal equivalent circuit of flip-flop.

Fig. 7. Eccles-Jordan flip-flop.

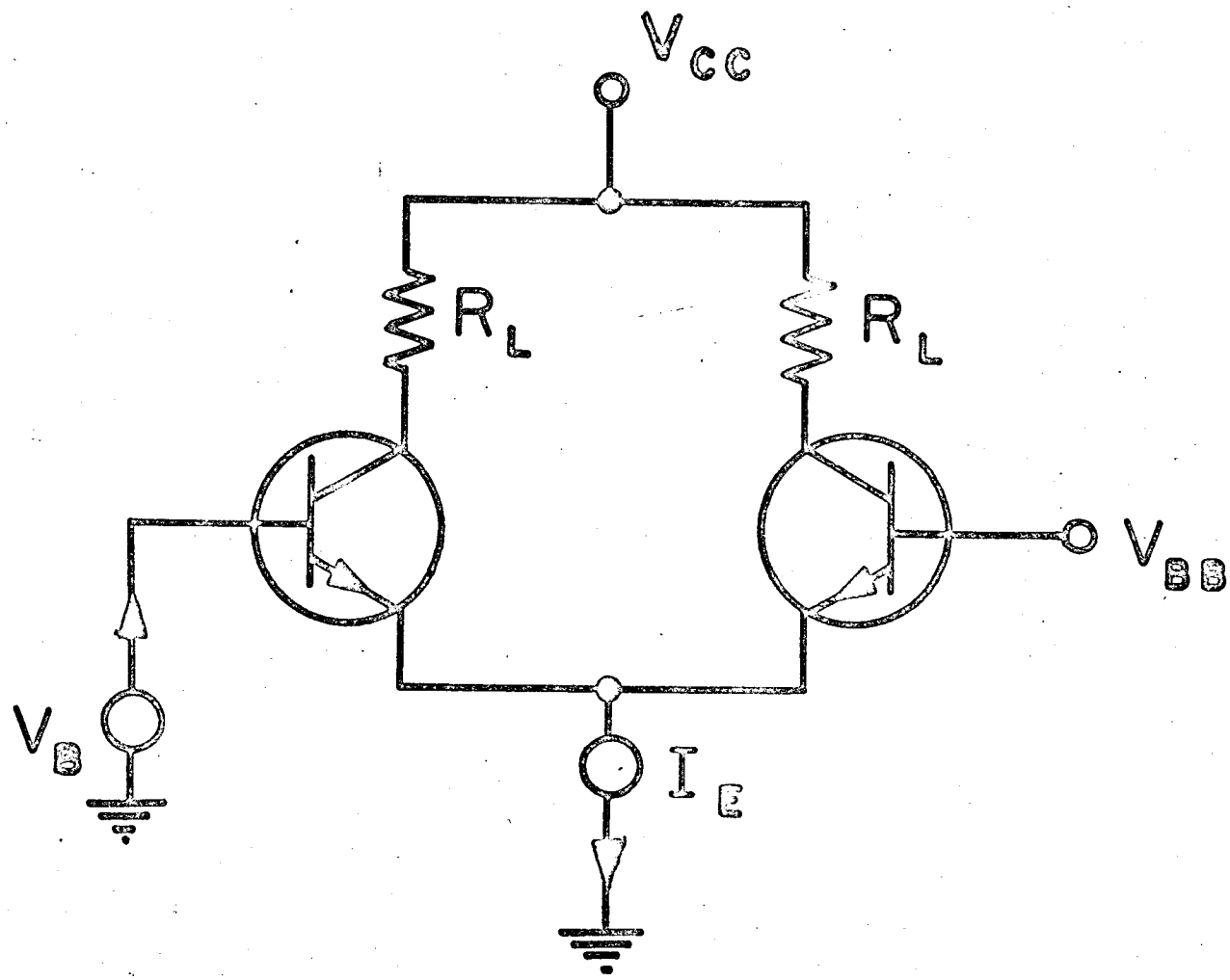

Fig. 1

MU-18967

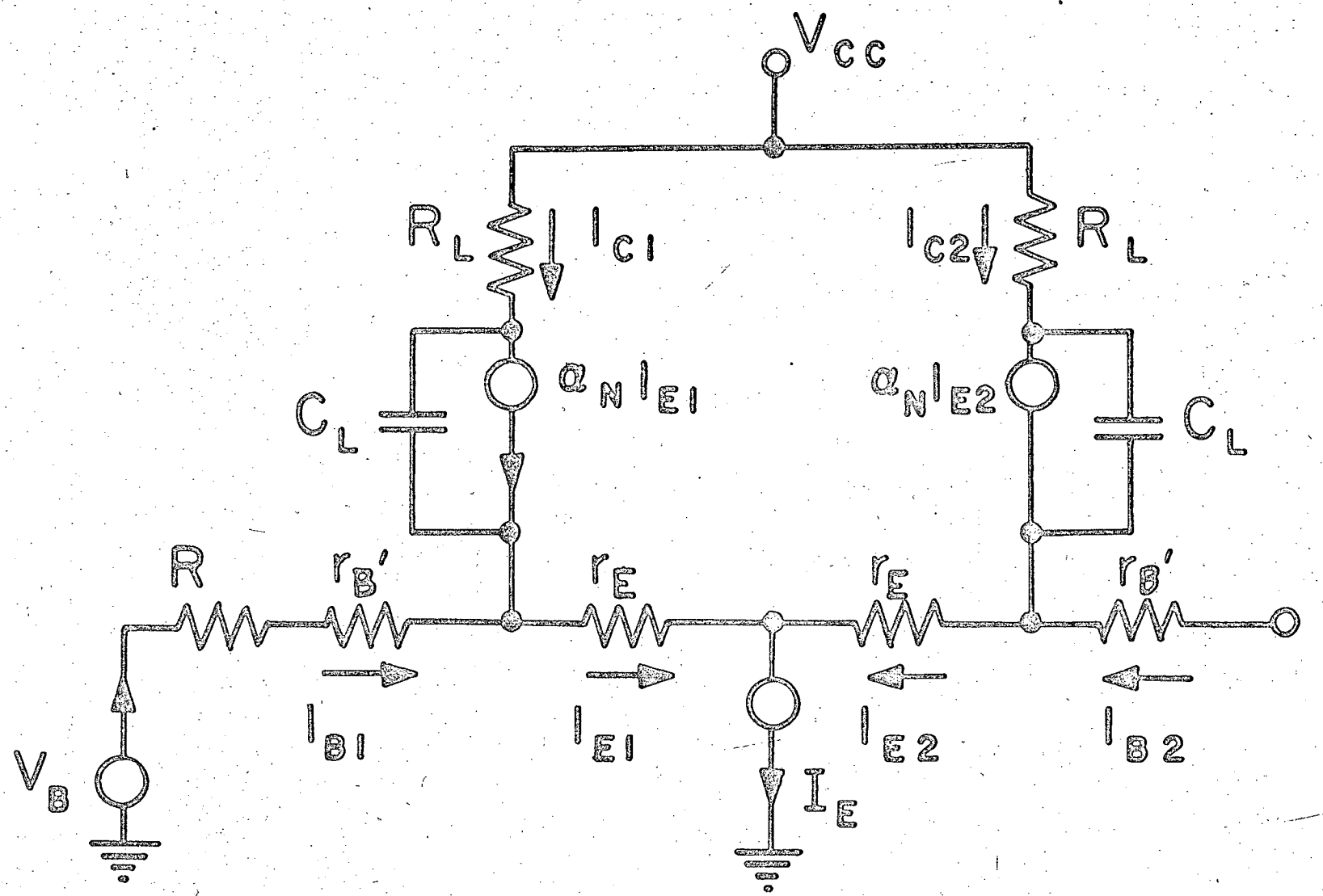

Fig. 2

MU-18968

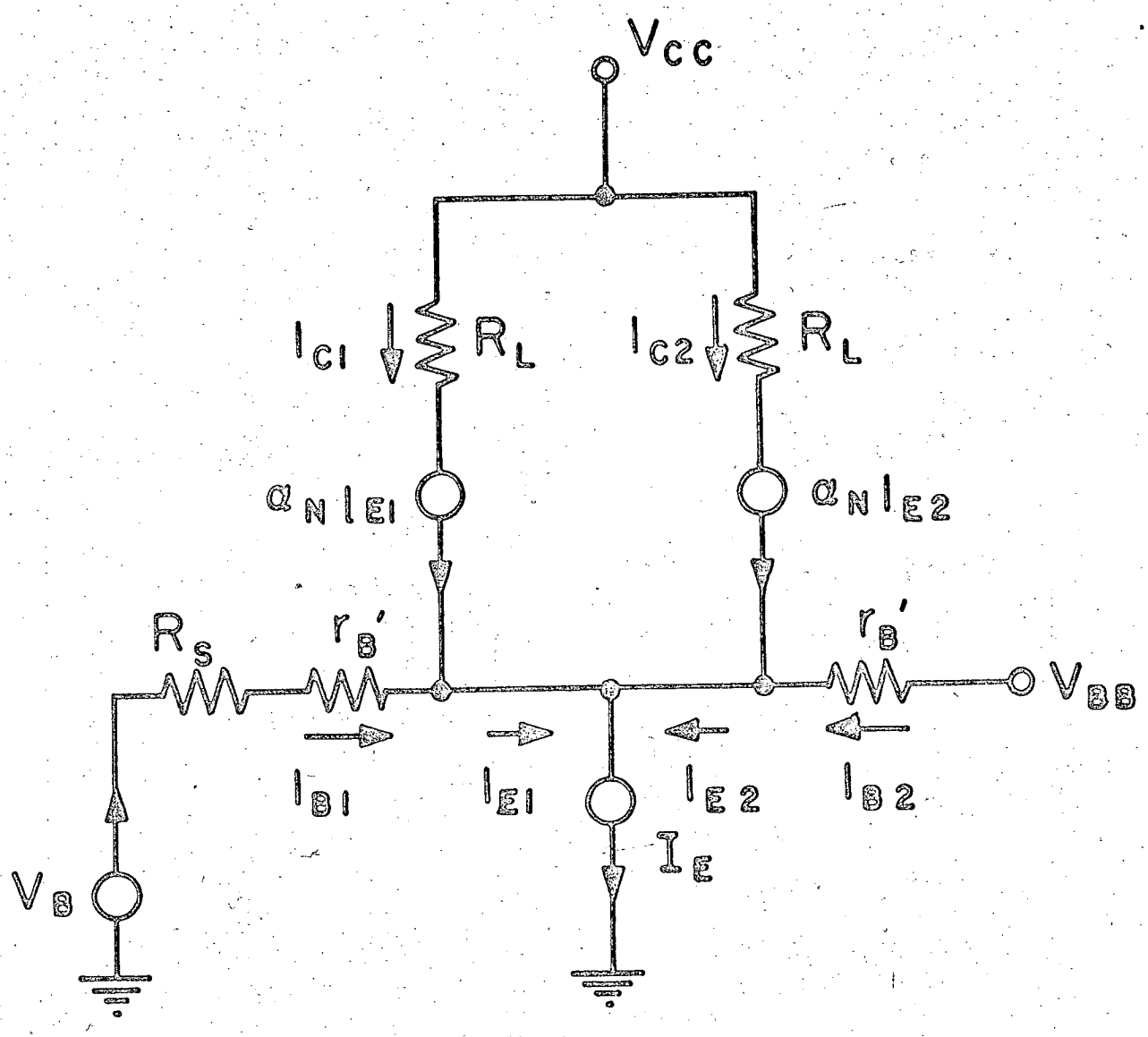

Fig. 3

MU-18969

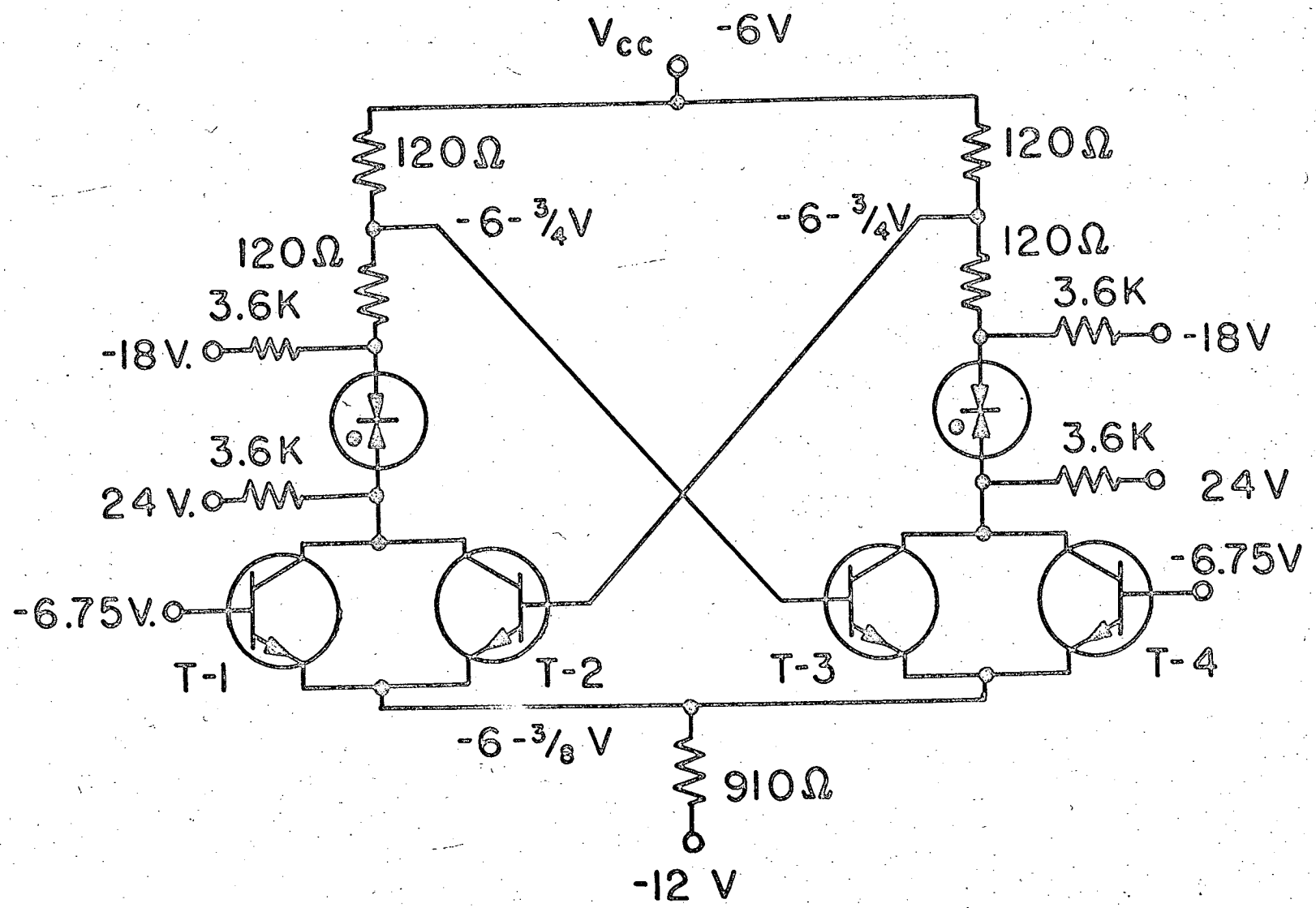

Fig. 4

MU-18970

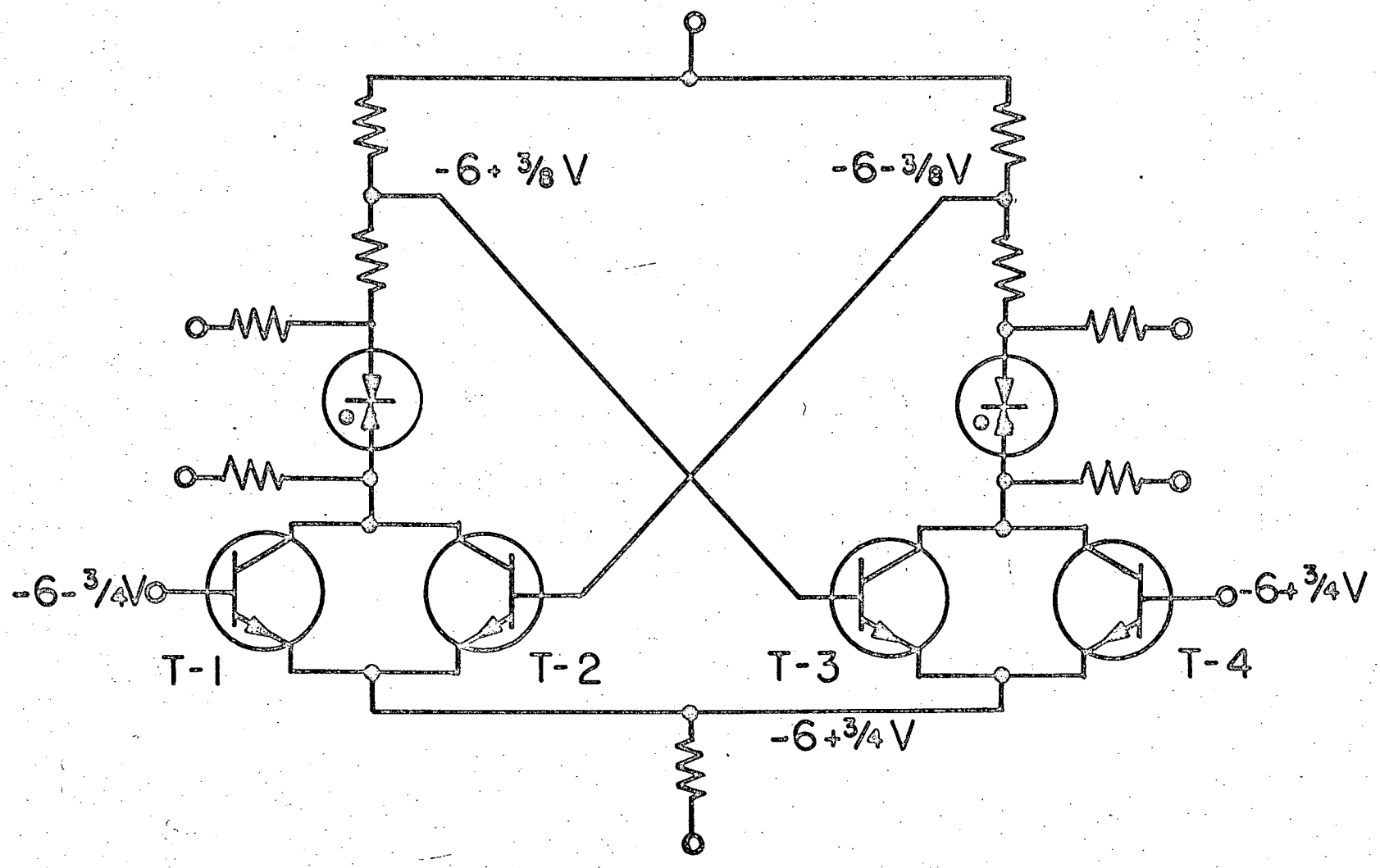

Fig. 5

MU-18971

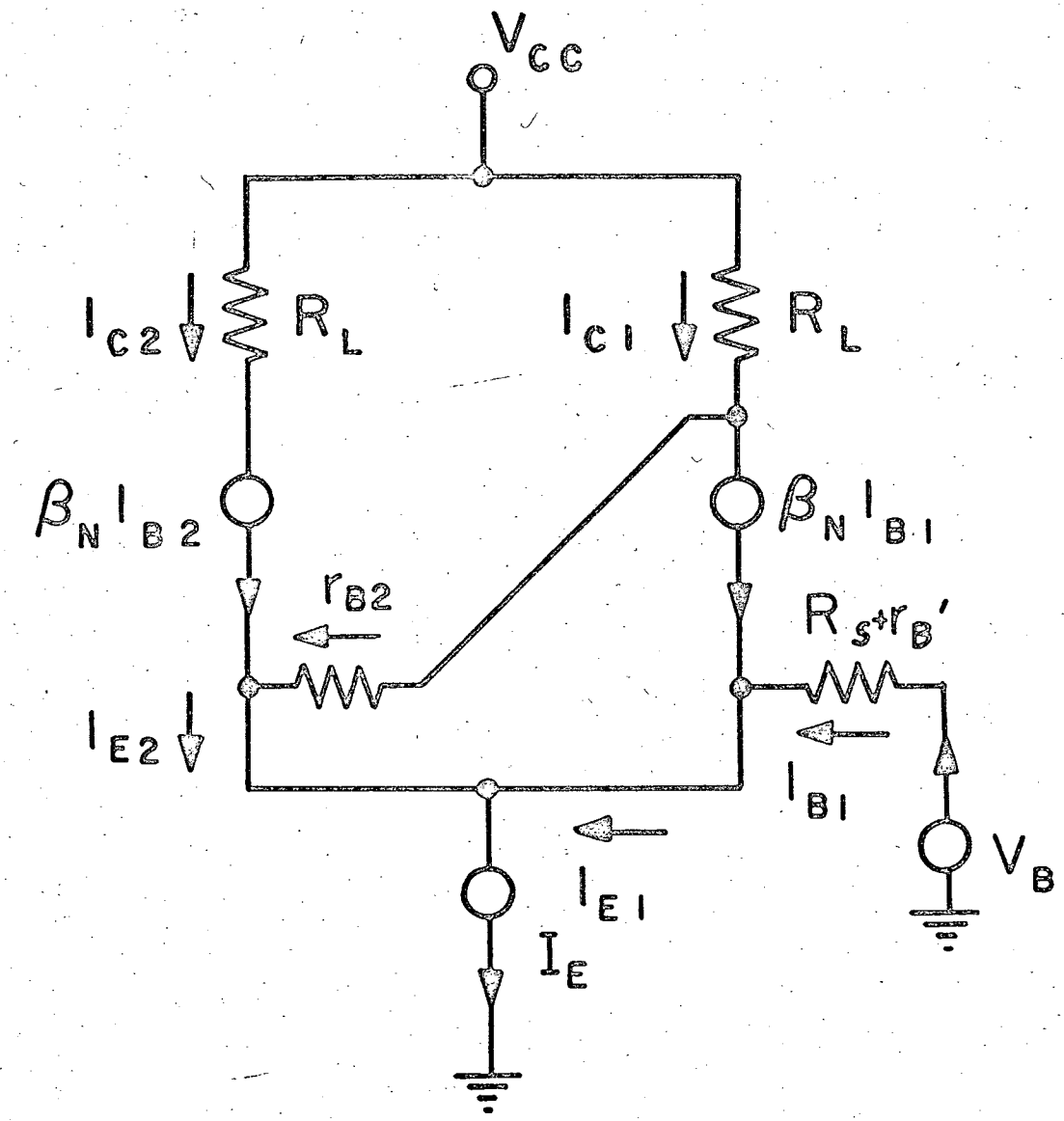

Fig. 6

MU-18972

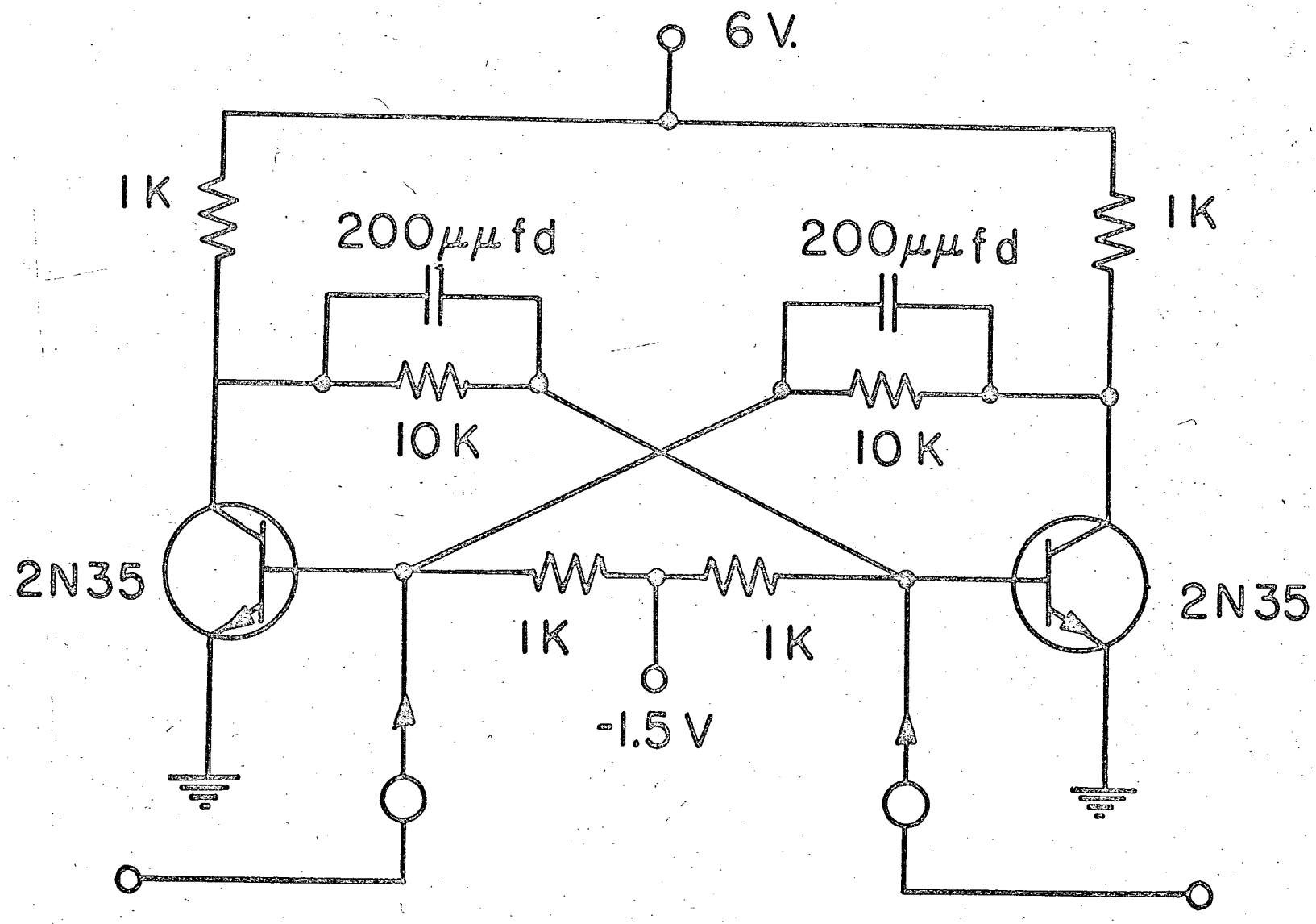

Fig. 7.

MU – 18973