UCRL 9039

UNIVERSITY OF CALIFORNIA

Ernest O. Lawrence Radiation Laboratory

TWO-WEEK LOAN COPY

This is a Library Circulating Copy which may be borrowed for two weeks. For a personal retention copy, call Tech. Info. Division, Ext. 5545

BERKELEY, CALIFORNIA

DISCLAIMER

This document was prepared as an account of work sponsored by the United States Government. While this document is believed to contain correct information, neither the United States Government nor any agency thereof, nor the Regents of the University of California, nor any of their employees, makes any warranty, express or implied, or assumes any legal responsibility for the accuracy, completeness, or usefulness of any information, apparatus, product, or process disclosed, or represents that its use would not infringe privately owned rights. Reference herein to any specific commercial product, process, or service by its trade name, trademark, manufacturer, or otherwise, does not necessarily constitute or imply its endorsement, recommendation, or favoring by the United States Government or any agency thereof, or the Regents of the University of California. The views and opinions of authors expressed herein do not necessarily state or reflect those of the United States Government or any agency thereof or the Regents of the University of California.

UCRL-9039

UNIVERSITY OF CALIFORNIA

Lawrence Radiation Laboratory
Berkeley, California

Contract No. W-7405-eng-48

SOME CHARACTERISTICS OF A STRONTIUM-90 BETA-PARTICLE RADIATION DETECTOR FOR GAS-LIQUID CHROMATOGRAPHY

Frank T. Upham, Frank T. Lindgren, and Alex V. Nichols

November 3, 1960

SOME CHARACTERISTICS OF A STRONTIUM-90 BETA-PARTICLE RADIATION DETECTOR FOR GAS-LIQUID CHROMATOGRAPHY

Frank T. Upham, Frank T. Lindgren, and Alex V. Nichols

Donner Laboratory of Medical Physics,
Division of Medical Physics, Department of Physics, and
Lawrence Radiation Laboratory, University of California
Berkeley, California

November 3, 1960

ABSTRACT

Performance characteristics of a "large" beta-particle ionization detector employing a Sr^{90} source is described in some detail. The critical components of this apparatus are evaluated and discussed in relationship to gas chromatography involving methyl esters of the long chain fatty acids. Useful information includes calibration data as well as details of the detector geometry and the injection assembly. Under favorable conditions of operation this detector has a large dynamic range and a high signal-to-noise ratio.

SOME CHARACTERISTICS OF A STRONTIUM-90 BETA-PARTICLE RADIATION DETECTOR FOR GAS-LIQUID CHROMATOGRAPHY*

Frank T. Upham, Frank T. Lindgren, and Alex V. Nichols

Donner Laboratory of Medical Physics,
Division of Medical Physics, Department of Physics, and
Lawrence Radiation Laboratory, University of California
Berkeley, California

November 3, 1960

INTRODUCTION

One of the most useful and flexible detection devices applied to gas-liquid chromatography has been the beta-particle detector with argon as a carrier gas. Although utilized extensively for biochemical analysis, there has been a limited amount of technical data on the characteristics and properties of this type of detector.[1,2] It is our purpose to describe in some detail the characteristics and performance data of an apparatus with a beta-particle ionization detector which has been applied to gas-liquid chromatography of the methyl esters of long-chain fatty acids.

EXPERIMENTAL

In over-all design our gas-liquid chromatographic unit is similar to the apparatus described by Farquhar et al.[3] Figure 1 illustrates schematically the components and general character of our complete gas-liquid chromatographic apparatus. Prior to the entrance of the carrier gas into the injection chamber the gas must pass through a preheating system which insures that the carrier gas entering the injection chamber and column is at or slightly

*This work was supported in part by Research Grant H-1882 (C5) from the National Heart Institute, Public Health Service, Bethesda, Md., and by the United States Atomic Energy Commission, Washington, D. C.

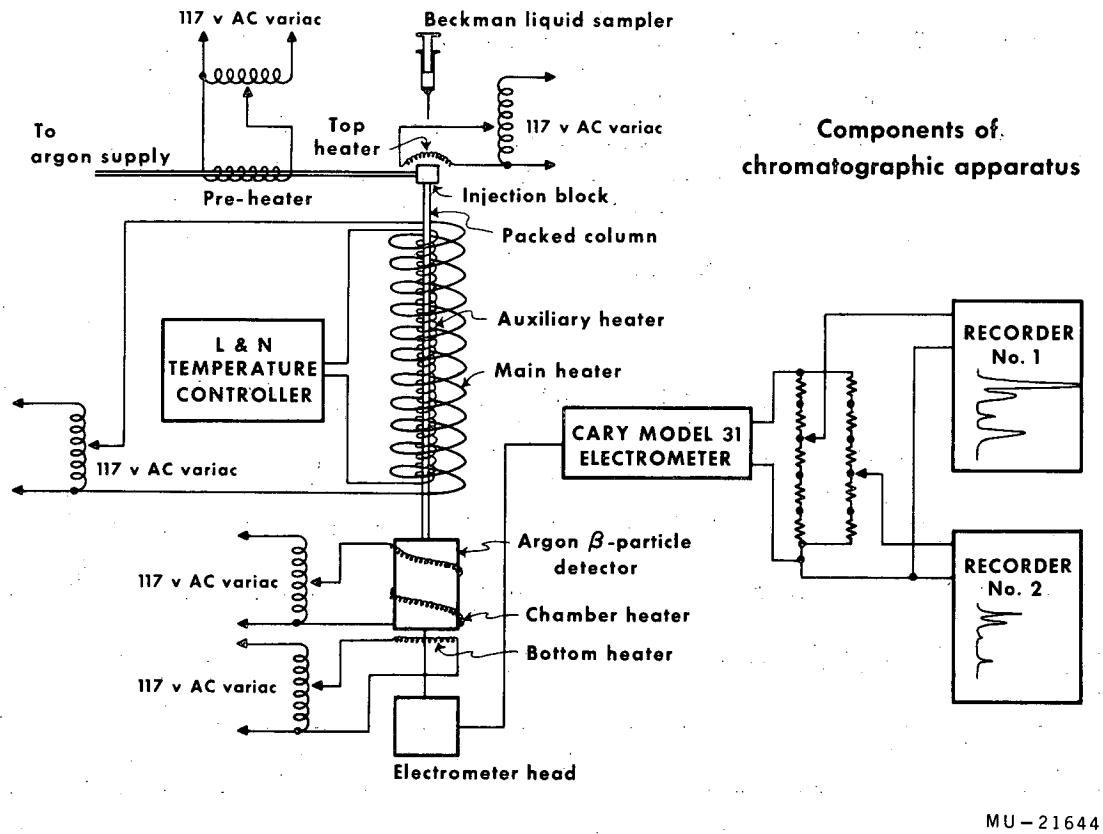

Fig. 1. Schematic diagram of gas-liquid chromatographic apparatus. The usual column temperature of 195°C is checked by a test column filled with uncoated 48 to 65 mesh chromasorb in which are embedded 6 thermocouple probes spaced throughout the length of the column. Thus, adjustments of all heaters to achieve column temperature uniformity may be made under typical operating conditions, including gas flow. The main heater is adjusted so that with the auxiliary heater off the column is maintained at approximately 6° below the desired operating temperature. Linearity to within plus or minus 1/2 degree centigrade in temperature throughout column is achieved by compensation of heat losses at the two oven "ends" by appropriate adjustment of the top, bottom, and chamber heaters.

above, the column temperature (usually 195°C). Our injection system, designed for solvent injection, connects the gas preheater to the top of the gas chromatographic column (see Fig. 2). The injection seal consists of a 1/16 in. silicone rubber disk firmly compressed by a 7-hole compression plate. A hypodermic needle may be inserted and removed through any hole without gas leakage. This feature is extremely important because gas leaks in the inlet system result in harmful baseline drifts and sporadic fluctuations. Also, because silicone rubber tends to flow, it is necessary periodically to tighten this gasket.

Gas-liquid chromatography is achieved within a straight 52 in. glass column (6 mm i.d.) terminating in a drawn capillary tip (1 mm i.d.). This tip barely projects into the detection chamber (see Fig. 3). The column material used consists of 30%, by weight, liquid phase (LAC 2-R 728) and 70% (48-65 Mesh) Chromosorb. Before it is used, such a column is conditioned (or prebled) within another thermal chamber at approximately 195° C for about 3 weeks. During this time, approximately 25% of the liquid phase originally on the column is removed. It is on such a conditioned column that the performance and calibration data are given. This procedure for column conditioning allows utilization of each chromatographic column during its most favorable performance period.

The details of the detector are shown in Fig. 3. The principal differences between the detector originally described by Lovelock[1] and ours, are in the effective size of the chamber and the composition, size, and location of the positive electrode. These features allow a lower operating voltage between the electrode and the chamber wall. Performance corresponds closely to the "large" detector recently described by Lovelock.[4] The detection and measurement of chromatographic components inside the detector is made

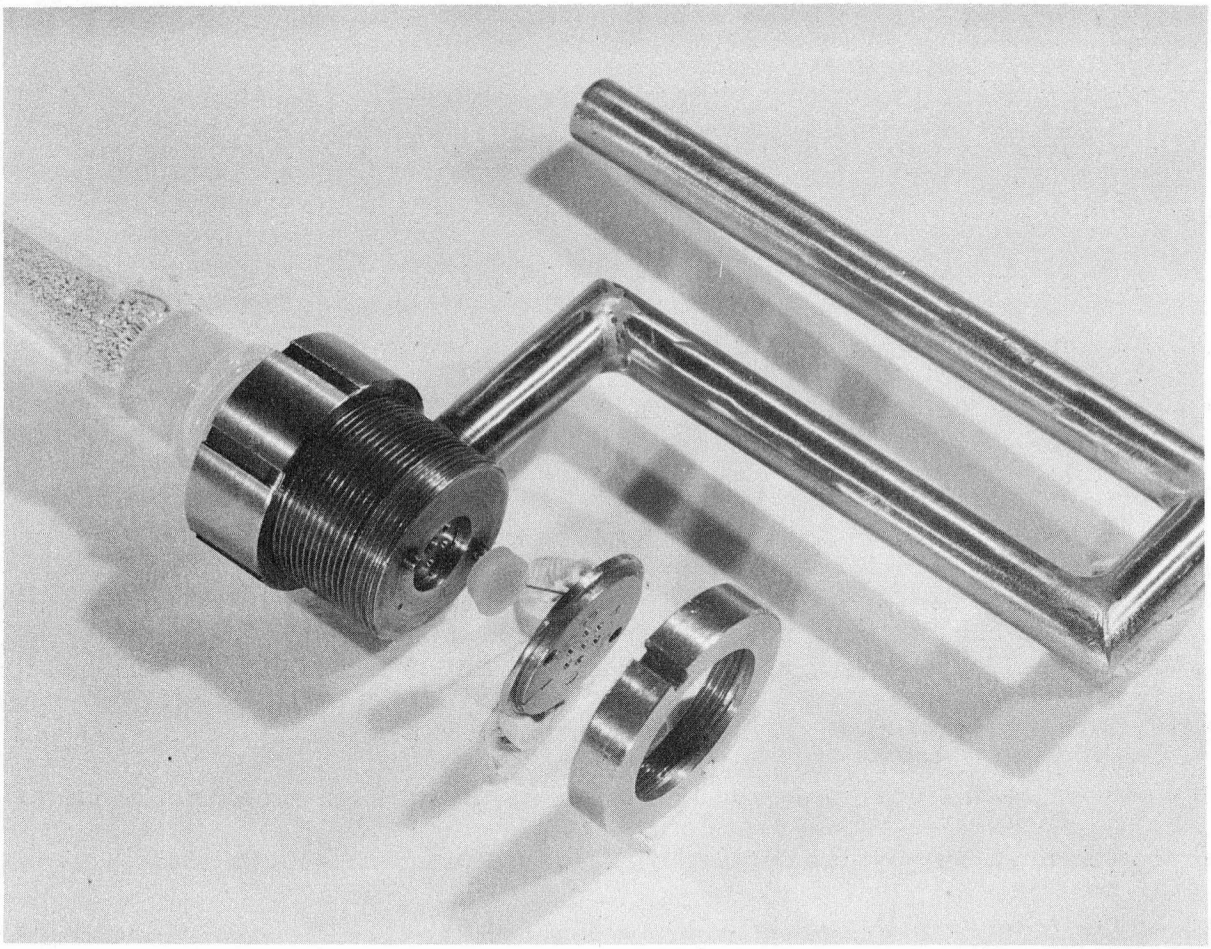

ZN-2318

Fig. 2. Injection assembly for chromatographic apparatus. Note the two pins in injection block which provide for alignment of the 7 injection holes in the compression plate with the 7 corresponding holes in the injection block. The 1/4 in. stainless steel gas inlet is connected to the gas pre-heater with a Swagelock fitting (400-1-2-316) equipped with a Teflon front ferrule. The top of the column (consisting of a female 10/18 glass joint) is joined to the injection block with a flanged collar which utilizes a silicone rubber O-ring seal.

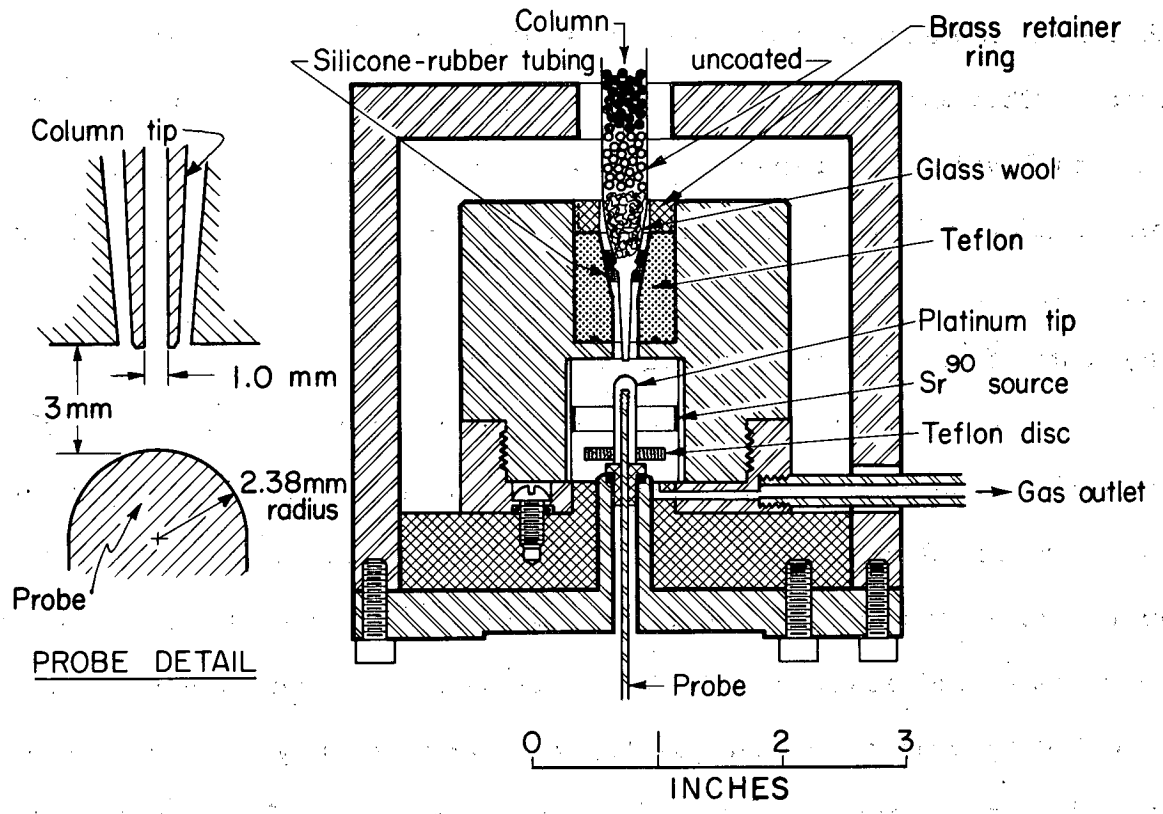

Fig. 3. Diagram of the detection chamber showing details of the positive platinum probe as well as the chamber geometry within the "critical detection volume." Chamber insulators (shown in cross-hatched) are of Al_2O_3. Metal (slant-shaded) is of 316 stainless steel. The 10 mc. Sr^{90} β-particle source is a 2.33×7.48×0.1 cm silver foil (SIC-9, The Radiochemical Centre, Amersham, England) which is rolled into a cylinder and tightly fitted into the chamber as illustrated. The teflon seat (for the column) allows easy positioning, seating and removal of the column without binding of the silicone rubber tubing to the chamber seat. Fragmentation of this silicone rubber tubing would otherwise interfere with proper seating of the next column and such fragments might also drop into the detection chamber.

possible by the presence of metastable argon atoms. These very short-lived metastable argon atoms ionize a small, but relatively constant fraction of the methyl ester molecules as the latter pass through the sensitive volume of the detector. This total ionization current collected by the platinum probe is allowed to flow through a load resistor across which a Cary Model-31 electrometer effectively measures the voltage generated. This voltage, amplified and recorded as a function of time, is a measure of the mass of fatty acid methyl ester that has passed through the chamber.

Temperature control is extremely important for such critical components as the column, the injection chamber, and the detector. Maximum temperature stability and control is needed for the column itself, because small temperature fluctuations (the order of less than 1° C) may introduce very large fluctuations in the background or "bleed" current. Column temperature stability is essential, particularly when gas-liquid chromatography involves the use of such resins as polydiethylene glycol succinate (PDEGS). The injection chamber should be maintained at or above the column temperature to insure rapid and complete vaporization of the injected sample.

Also, it is desirable to maintain the detector at or slightly above the column temperature to prevent liquid phase bleed from accumulating within the chamber and potentially interfering with the detection process. However, a principal difficulty in controlling the detection chamber temperature is that in nearly all equipment (including our own) the chamber usually is coupled thermally with the column oven. Therefore, the chamber temperature or fluctuations in chamber temperature may effect the temperature in part or all of the chromatographic column. This may be true irrespective of the independence of the column temperature control equipment. In preliminary temperature studies we have observed that the beta-particle detector is temperature sensitive. For our detector,

sensitivity to fatty acid methyl ester components increases the order of 0.3% per degree centigrade over an investigated temperature range of from 195 - 247° C. Although this temperature sensitivity is small, nonetheless, failure to control adequately detector temperature during a chromatographic run may lead to serious baseline fluctuations (due in part to column temperature disturbances) as well as to small absolute changes in sensitivity for the components under investigation.

A measure of the volume reproducibility in liquid sample injections with the "Beckman Liquid Sampler" is illustrated in Table I.

Table I

Reproducibility of 10 consecutive sample injections (of 0.01 ml normal hexane containing 10.3 μg methyl palmitate) using the "Beckman Liquid sampler".

Injection	Elution Time (min)	Triangulated area at 1 volt (in^2)	Peak height af 1 volt (in.)
1	8.80	0.66	1.88
2	8.83	0.67	1.94
3	8.80	0.66	1.91
4	8.83	0.66	1.94
5	8.83	0.68	2.03
6	8.84	0.65	1.84
7	8.78	0.66	1.92
8	8.87	0.64	1.92
9	8.81	0.67	1.89
10	8.84	0.66	1.93
Mean	8.82	0.66	1.92

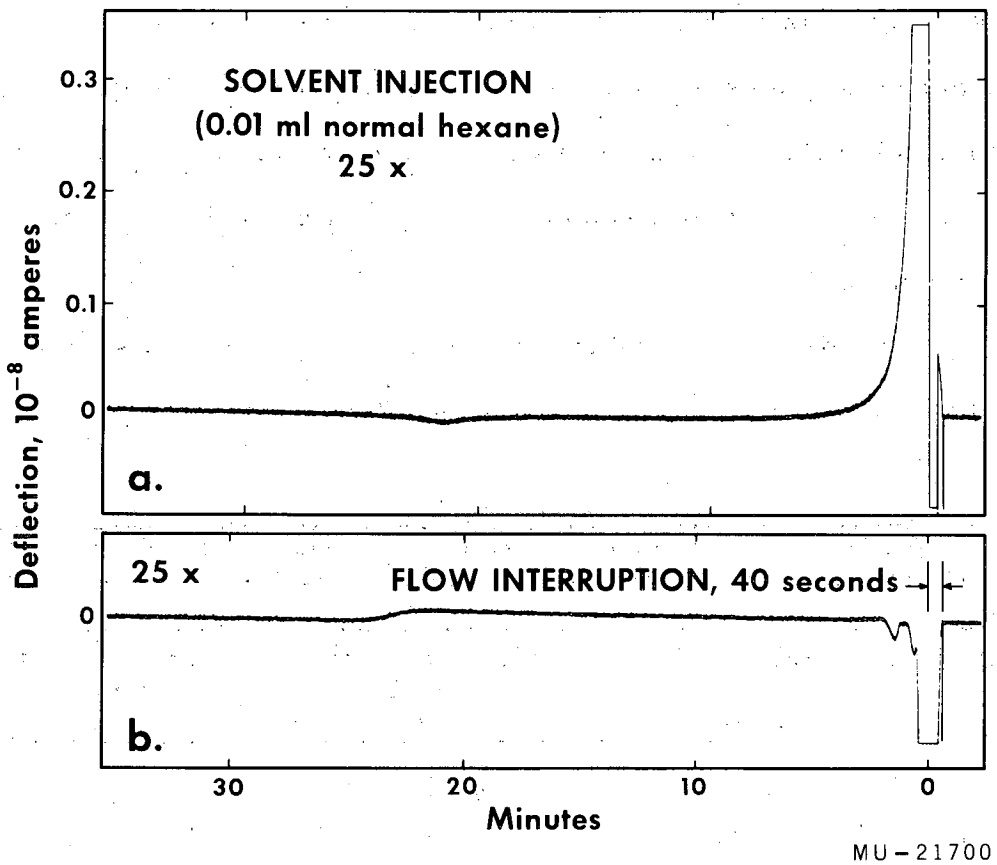

Fig. 4. Typical baseline disturbances caused by (a) solvent injection of 0.01 ml solvent (normal hexane) and, (b) carrier gas flow interruption for 40 seconds. For the solvent baseline note the injection pip followed by the characteristics solvent front negative deflection which provides the "O" reference for measuring retention times. Also, minor distortions of the baseline for both solvent injection and gas flow interruption occur approximately 20 to 30 minutes after the initial disturbances. Approximately one minute after the injection of hexane normal detector sensitivity is restored at which time nearly all of the solvent has cleared the chamber.

Our experience so far is that this device, with slight modifications, allows convenient and reproducible injections of liquid sample volumes over the range of from 0.0025 ml to 0.05 ml. These modifications include shortening the needle to a length of 1 inch, introducing a Male 0-80 threaded 1/4 in. extension sleeve on the plunger, machining a 0.015 in. -facing cut leaving a 3/16 in. diameter shoulder on the inner side of the knurled plunger knob and making additional "sampler spacers" corresponding to volumes of 0.0025, 0.00375 and 0.0075 ml. The data in Table I show that the retention times for each methyl palmitate sample differs from the mean by less than 0.5%. Areas under each peak calculated by triangulation differ by no more than 3% from the mean. Although peak height is not only a measure of the mass of injected sample but also depends in part upon the nature and efficiency of the injection process, calibration of a single component nonetheless may be made directly in terms of peak height. Thus, if one utilizes peak height as a measure of mass of methyl palmitate, each determination differs from the mean by no more than 6%.

A major disadvantage of liquid sample injection is the disturbance in baseline caused by the solvent itself. This disturbance usually prevents analysis of early fatty acid methyl ester components such as 8:0 or those of shorter chain lengths when employing the PDEGS liquid phase. However, unless a solvent is used, it is difficult to manipulate effectively small methyl ester samples. Fortunately, the disturbance in baseline (see Fig. 4a) following the injection of a solvent volume is very reproducible. Further, the presence of a solvent positively identifies the "solvent front" for the accurate determination of retention times. In comparison, carrier gas flow interruption, even without actually opening the inlet gas system to introduce a methyl ester

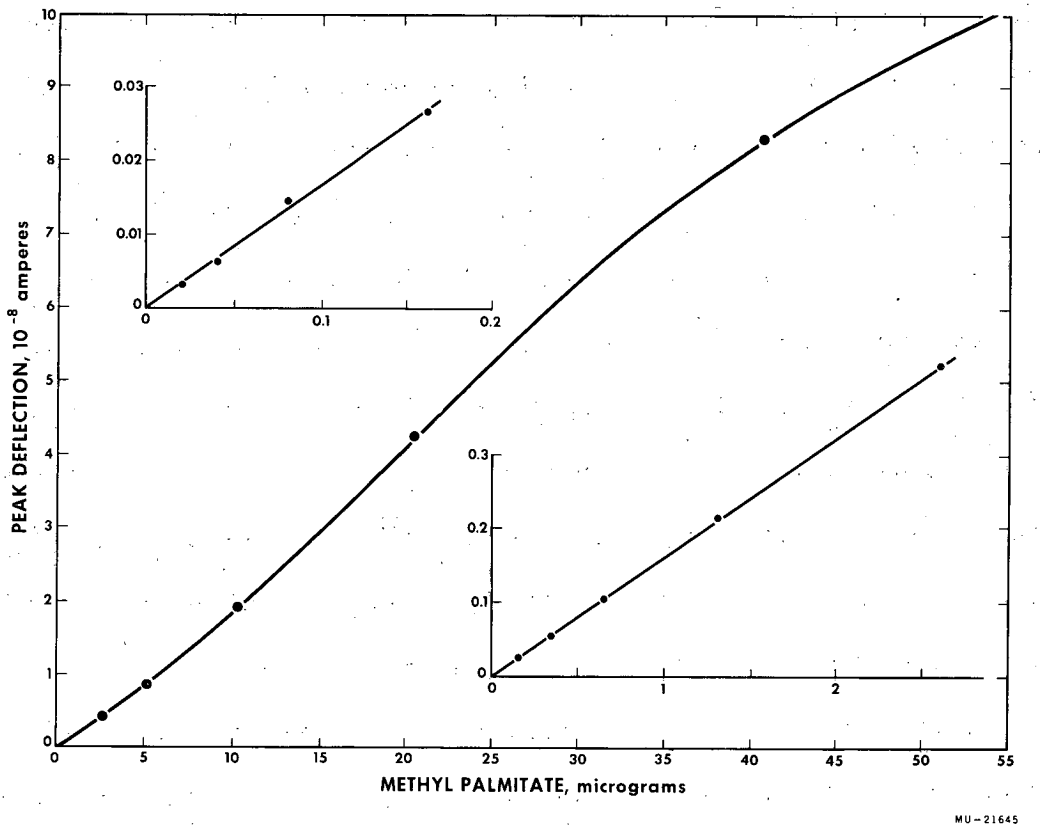

Fig. 5. Typical calibration data for methyl palmitate over the mass range of from 0.02 to 42 μg. Note the slightly sigmoidal character of the curve, typical of all calibrations observed. Unfortunately this type of curve is not easily "linearized" by electronic circuitry. For this calibration all methyl ester samples (in 0.01 ml solvent) were injected by the same person to minimize injection error.

sample (as well as small amounts of air) results in marked baseline distortions (see Fig. 4b) which may interfere with the early analysis and interpretation of the gas-liquid chromatogram.

Figure 5 illustrates a typical calibration curve for methyl palmitate obtained with our beta-particle detector over the mass range of from 0.02 micrograms to 42 micrograms. In this calibration, methyl palmitate dissolved in normal hexane was diluted successively by a factor of 2 (each time). Thus, all injections over this range, irrespective of sample mass, were of equal volume (0.01 ml) insuring maximum accuracy in the mass of injected methyl palmitate. The relationship observed between peak height and sample mass is not linear over this range but is somewhat sigmoidal. This relationship is also true if one uses triangulated area instead of peak height. The conditions for this calibration are 600 volts (DC) between the chamber and positive probe. A load resistor of 11×10^6 ohms is employed but no "linearizing" resistor is used. Although we have tried voltages from 300 to approximately 1500 volts, at which time breakdown occurs, best linearity of response has been observed in the neighborhood of 600 volts. Further, we have investigated the use of linearizing resistors (1)(3) but have found that with our detection system they have been ineffective in providing an improved linearity of response. Above 1×10^{-7} amperes (not shown in Fig. 6) our detector tends to saturate with minimal increase in peak deflection with increase in sample mass.

The peaks observed over the 0.02 to 42μg range are approximately gaussian and exhibit minimal tailing. Figure 6 illustrates the shapes of such components for 42, 5.2, 0.65 and 0.02 μg of methyl palmitate. The column efficiencies, expressed as theoretical plates are approximately constant over this range of sample mass. However, the methyl palmitate retention time appears to increase very slightly with decreasing sample mass.

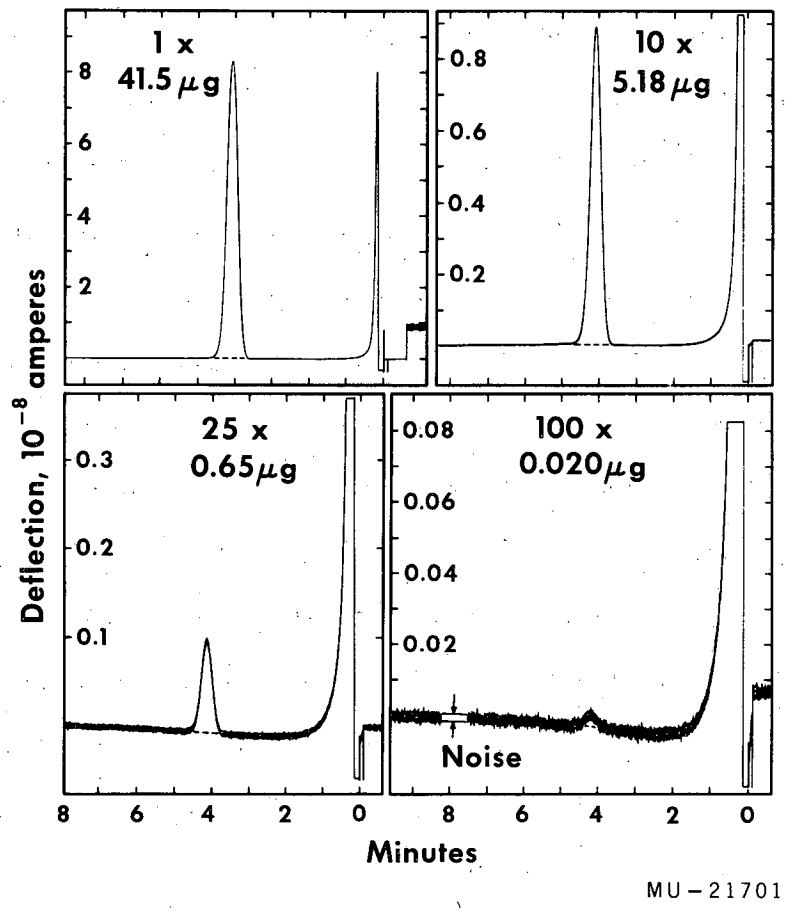

Fig. 6. Components and peak currents obtained for 42, 5.2, 0.65 and 0.02 μg of methyl palmitate. The lower right chromatogram illustrates the noise level which is approximately $\pm 1\times10^{-11}$ amp. The maximum usable signal is approximately 10^{-7} amp (full scale deflection at 1 v) and the maximum usable signal to noise ratio is approximately 10^4 to 1. Note the negative deflection which identifies the instant of injection. This deflection is accomplished by a pipping device operated by a push button from the top of the column. It consists of a 1-1/2 volt battery, a 1.5×10^6 ohm resistor and a 10 microfared condensor in series. To pip, the charge across the condenser is discharged across each recorder input giving a negative deflection followed by a quick recovery. This simple economic device is useful for time markings on each chromatogram. Typical applications include marking injection "O" time as well as to establish time continuity in case of an "emergency" chart paper change during a run.

The ultimate performance in the detection of small samples by this detector is related to the noise level. The RMS noise, as measured with a 1-second full scale recording potentiometer (L and N type G) is approximately 1×10^{-12} amp when pure argon is flowing through the chamber. For this conditon, the background current is approximately 4×10^{-9} amp. However, when a liquid phase such as PDEGS is used, a large additional bleed current results from the ionization of bleed molecules passing through the chamber. Operating at 195° C, the average bleed is approximately 25 μg/minute. Under these conditions the observed noise level appears to be related primarily to the level of this bleed current which decreases from approximately 3×10^{-8} to 1.5×10^{-8} amp during the useful life of the column. The RMS noise is approximately 1/3000 of the bleed current or 10^{-11} amp. Figure 6 shows this observed noise level and illustrates the limitation in resolution (approximately 0.02 μg or 10^{-10} moles,) for a component such as methyl palmitate.

DISCUSSION AND CONCLUSIONS

It is not possible here to treat completely the characteristics of our gas-chromatographic apparatus. However, several points not considered in detail should be mentioned. First, with regard to amplifier choice, we have used a Cary electrometer (Model 31) because amplifier stability and performance is important. For instance, an amplifier used with a detection device, such as we have described, should at no time introduce during the most refined application of the apparatus more than, say, 1/10 the noise and drift generated from any other source. Although not required in the present study, one can anticipate applications which may require current stability down to 10^{-15} amp (which the Cary can easily achieve).

Second, the use of two recorders, each of which can be switched independently to one of several sensitivities is essential to achieve complete chromatographic analysis of all small and trace components as well as the large principal components. Otherwise, two runs, each at different quantitative levels of injection, would be necessary requiring twice the "chromatographic apparatus time". Since most runs are of several hours duration, this total analysis time per sample is an important consideration. For most routine analyses, we have found a factor ten in sensitivity between recorders to be satisfactory. However, for methyl ester analysis of components of relatively long retentive times (such as the C22 and C24 series) additional sensitivity of from 25X to 100X may be required. Convenient switching to this increased sensitivity on the "initial" low sensitivity recorder may be made after the 18:2 or the 20:4 components have been recorded using an automatic time delay advancing switch. (Ledex 12 position relay, Ledex, Inc., 123 Webster St., Dayton, Ohio).

Because of temperature sensitivity of the detector, it is desirable to have a separate heating unit for the detector assembly independent of and insulated from the main column heater, particularly when gas-liquid chromatography involves column operation at different temperatures. Another need for temperature control involves the inlet carrier gas. This gas should be at or slightly above the column temperature, otherwise variation in carrier gas flow rate may introduce temperature fluctuations in the top of the column with potentially detrimental results. For maximum temperature stability of all components it is desirable to continuously operate the gas-liquid chromatographic apparatus.

Baseline stability is, of course, extremely important for satisfactory gas-liquid chromatography. Although not considered in detail here, the beta-particle detector is sensitive to flow rates over the usual range of operation (20 to 120 ml/min). However, improved detector stability may be achieved by operating the detector chamber at from 1 to 2 psi above atmospheric pressure. This may be accomplished conveniently by introducing two or three 0.2 ml pipettes in series with the gas outlet and the gas flow meter (usually a soap bubble device). Operation of the detector at such increased gas pressure increases by approximately twofold its absolute sensitivity to fatty acid methyl esters (for flow rates of from 60- 80 ml/min).

Finally, some considerations of the actual mechanism of this type of beta-particle detector are in order. Our detector operating at 195° C collects approximately 1 electron for each 4,000 molecules of methyl palmitate which pass through the chamber. Presumably, the mechanism depends primarily upon a constant population of metastable argon atoms present within the "critical detection volume". The necessity for a radioactive source to provide and maintain this condition has recently been questioned.[5] In preliminary experiments, with a stainless steel chamber without a source, our detector has failed to perform at all. However, when we introduced into this sourceless detector a uranium glass cylindrical sleeve of approximately the same dimensions as our source limited detection performance was restored. The detection characteristics were different from those ocurring when a source was present requiring higher potentials for operation. Also, with the exception of the voltage regions of 920 volts and 990 volts, there was marked instability of the detector as revealed by baseline drifts and absolute sensitivity fluctuations. It is our preliminary conclusion that although operation of the detector without a source is possible, a radioactive source is nonetheless essential for the

optimum operation of this detection device. The fact that a "sourceless" detector works, yet requires for operation a glass surface which may contain a minute amount of radioactivity raises some unanswered questions as to the exact detection mechanism.

ACKNOWLEDGMENTS

We wish to thank Drs. A. T. James and J. E. Lovelock of the National Research Institute, Mill Hill, London, for their counsel and many helpful suggestions given prior to the design and construction of our apparatus. Also, we wish to thank shop foreman, Mr. Pete Dowling and machinist, Mr. Reed Johnson of the Donner Laboratory machine shop for their craftsmanship and patience in constructing many of the critical components of our apparatus.

REFERENCES

1. J. E. Lovelock, J. Chromatog, 1, 35 (1958).
2. S. R. Lipsky and R. A. Landowne, Ann. Rev. Biochem. 29, 649 (1960).
3. John W. Farquhar, William Insull, Jr., Paul Rosen, Wilhelm Stoffel, and Edward H. Ahrens, Jr. Nutr. Rev. 17, 8 (Supplement) 1960.
4. J. E. Lovelock, Argon Detectors. Third Gas Chromatography Symposium, 8-10 June 1960, ed R. P. W. Scott, (Butterworths Scientific Publications, London.)
5. E. Haahti, T. Nikkari, and E. J. Kulonen, Chromato., 3, 372 (1960).

This report was prepared as an account of Government sponsored work. Neither the United States, nor the Commission, nor any person acting on behalf of the Commission:

A. Makes any warranty or representation, expressed or implied, with respect to the accuracy, completeness, or usefulness of the information contained in this report, or that the use of any information, apparatus, method, or process disclosed in this report may not infringe privately owned rights; or

B. Assumes any liabilities with respect to the use of, or for damages resulting from the use of any information, apparatus, method, or process disclosed in this report.

As used in the above, "person acting on behalf of the Commission" includes any employee or contractor of the Commission, or employee of such contractor, to the extent that such employee or contractor of the Commission, or employee of such contractor prepares, disseminates, or provides access to, any information pursuant to his employment or contract with the Commission, or his employment with such contractor.