UCRL 9060

UNIVERSITY OF CALIFORNIA

Ernest O. Lawrence Radiation Laboratory

TWO-WEEK LOAN COPY

This is a Library Circulating Copy which may be borrowed for two weeks. For a personal retention copy, call Tech. Info. Division, Ext. 5545

BERKELEY, CALIFORNIA

DISCLAIMER

This document was prepared as an account of work sponsored by the United States Government. While this document is believed to contain correct information, neither the United States Government nor any agency thereof, nor the Regents of the University of California, nor any of their employees, makes any warranty, express or implied, or assumes any legal responsibility for the accuracy, completeness, or usefulness of any information, apparatus, product, or process disclosed, or represents that its use would not infringe privately owned rights. Reference herein to any specific commercial product, process, or service by its trade name, trademark, manufacturer, or otherwise, does not necessarily constitute or imply its endorsement, recommendation, or favoring by the United States Government or any agency thereof, or the Regents of the University of California. The views and opinions of authors expressed herein do not necessarily state or reflect those of the United States Government or any agency thereof or the Regents of the University of California.

UCRL-9060

UNIVERSITY OF CALIFORNIA
Lawrence Radiation Laboratory
Berkeley, California
Contract No. 7405-eng-48

RECOIL STUDIES OF HEAVY ELEMENT NUCLEAR REACTIONS. I*

Paul F. Donovan, B. G. Harvey, and W. H. Wade

February 1960

Printed for the U. S. Atomic Energy Commission

RECOIL STUDIES OF HEAVY ELEMENT NUCLEAR REACTIONS. I*

Paul F. Donovan[†‡], B. G. Harvey, and W. H. Wade[§]
University of California
Lawrence Radiation Laboratory
Berkeley, California

February 1960

ABSTRACT

Techniques have been developed which permit the accurate measurement of angular distributions of recoil nuclei formed in nuclear reactions.

The angular distributions of recoils from the reactions $Bi^{209}(\alpha,3n)At^{210}$, $Bi^{209}(\alpha,4n)At^{209}$, and $Bi^{209}(d,3n)Po^{208}$ are consistent with a reaction mechanism involving the formation of a compound nucleus and subsequent isotropic evaporation of the neutrons, as shown by comparison with Monte Carlo calculations based on an isotropic evaporation model.

- -

*This work was performed under the auspices of the U. S. Atomic Energy Commission.

†Part of this work was submitted in partial fulfillment of the requirements for the Ph.D. degree in chemistry at the University of California, Berkeley, California.

‡Present address: Bell Telephone Laboratories, Murray Hill, New Jersey.

§Present address: Department of Chemistry, University of Texas, Austin, Texas.

RECOIL STUDIES OF HEAVY ELEMENT NUCLEAR REACTIONS. I

Paul F. Donovan, B. G. Harvey, and W. H. Wade

University of California
Lawrence Radiation Laboratory
Berkeley, California

February 1960

INTRODUCTION

This work was undertaken in order to gain a more complete understanding of nuclear reaction mechanisms in the heavy element region than may be acquired from cross section measurements. Several authors have studied nuclear reactions by means of various recoil techniques,[1-8] but it seemed plausible that further information on reaction mechanisms could be gained by accurate measurements of angular distributions of heavy recoils.

There are several advantages of studying heavy recoils from nuclear reactions rather than observing the light particles. Detection of the recoiling product nuclei by observation of their radioactive decay is often extremely sensitive and very specific. Therefore, one may investigate the mechanism by which a given product is formed even though the yield is very low, and even though other reactions are taking place simultaneously with cross sections that may be several orders of magnitude larger. For example, it would be difficult to learn anything about an $(\alpha,2n)$ reaction by observation of the neutrons in a helium ion energy range where almost all the total cross section belonged to the $(\alpha,3n)$ and $(\alpha,4n)$ reactions.

In this paper, angular distribution measurements of heavy recoils coming from the $(d,3n)$, $(\alpha,3n)$, and $(\alpha,4n)$ reactions of Bi^{209} are presented. Results of Monte Carlo calculations based on an isotropic evaporation model are used to interpret the experimental angular distributions.

EXPERIMENTAL PROCEDURES

Bismuth targets were prepared by vacuum vaporization of bismuth metal on to 0.001 inch thick aluminum foils from hot tantalum or tungsten filaments.

The thickness of the deposited bismuth was determined by measuring spectrophotometrically the amount of the yellow bismuth-thiourea complex[9] produced by the addition of thiourea to a solution containing bismuth dissolved from a section of the aluminum foil.

All bombardments were carried out at the Crocker Laboratory 60-inch cyclotron. The targets were mounted in the assembly shown in Figure 1. The target chamber was evacuated to 50 to 100 microns pressure during the bombardment, and the uncoated side of the target foil, which faced the incoming beam, was cooled by helium gas circulating between the target and the aluminum degrading foils that were used to vary the energy of the incident particle beam. A catcher foil, consisting of a circular piece of 0.001 inch thick aluminum foil 4.6 cm in diameter, was positioned behind the target at a distance determined by the angle it was desired to intercept. The position of the beam as it passed through the target was fixed by placing a graphite collimator with a 1/8 inch circular hole in front of the target assembly. After passing through the aluminum catcher foil, the beam was stopped in an electrically insulated water-cooled Faraday cup at the back of the target chamber. The beam current at the Faraday cup was measured by an electrometer. In these studies, beam currents of about 0.25 microampere were usually used. With much larger beam currents, there was a tendency for a film of foreign material to deposit on the target, which caused scattering of the recoils. Also, with high beam current there was a possibility of vaporizing target material from the aluminum foil, or of causing diffusion of the target material into the aluminum backing.

After bombardment, the aluminum catcher foil was removed from the target

chamber and cut into 11 concentric rings by pressing it against a steel cutter in an hydraulic press at 5000 psi. The range of angles that each ring subtended with respect to the target was calculated from the dimensions of the catcher foil, the weight of the ring, and the distance of the catcher foil from the target. In most experiments, the catcher was 3.0 to 6.0 cm from the target.

The recoil products caught by the aluminum rings were measured by gross alpha counting or alpha pulse height analysis, depending on the species involved.

As the result of a series of experiments whose object was to determine the effect of target thickness on the recoil angular distribution, it was found that the angular distribution was essentially independent of target thickness if the target was about 1 microgram per square centimeter or thinner.

Since the recoil target assembly was normally used near the cyclotron at a point where the cyclotron magnetic field was about 9000 gauss, it was necessary to show that the trajectories of the recoils were not seriously disturbed by the field. In several experiments the target assembly was moved outside the magnetic field, the beam being brought into it through an iron pipe which served as magnetic shielding for the beam ions. No change in the angular distribution was observed.

On passage through the aluminum degrading foils, the incident ion beam was scattered to a certain extent. Although at most incident energies the effect of this scattering on the recoil angular distribution was trivial, at the lowest energies studied it was somewhat more important. In such cases a correction was made for this effect.

MONTE CARLO CALCULATIONS

A simple evaporation model, based on the compound nucleus concept, was taken as the starting point for Monte Carlo calculations of recoil angular distributions. In order to facilitate the calculations, several simplifying

assumptions and approximations were made. These are listed and discussed below.

1. Neutrons are the only particles emitted from the compound nucleus. Competitive de-excitation by other modes, such as proton and gamma ray emission, is negligible as long as the nucleus is excited above the binding energy of the last neutron.

2. The energy spectrum of the neutrons emitted from the excited nucleus, unmodified by thermodynamic requirements, is given by the expression

$$P(E) \propto Ee^{-E/T},$$

where P(E) is the probability of evaporating a neutron of energy E, E is the energy of the evaporated neutron, and T is a parameter, usually referred to as the "nuclear temperature," used to adjust the shape of the evaporation energy spectrum. The calculations show that the energy spectrum of the emitted neutrons leading to a particular reaction at the excitation energies investigated is so drastically changed from the form given above by the imposition of thermodynamic requirements on the outgoing neutrons, and by competition from other neutron emission reactions, that the model is not very sensitive to the exact form of the unmodified energy spectrum.

3. The angular distribution of the outgoing neutrons is isotropic in the system of the recoiling nucleus. This provides a simple model with which experimental angular distributions may be compared.

4. The parameter T is constant throughout the evaporation chain. The model does not seem to be sensitive to this assumption. Monte Carlo calculations have been carried out in which T was varied by several tenths Mev with only a small effect on the angular distributions.

The following approximations have been made in order to simplify the equation that predicts the angle of the recoil nucleus in the laboratory system.

5. The distance traveled by the recoiling nucleus in the laboratory system during the evaporation process is negligible compared with the distance

from the target to the catcher foil. This approximation introduces no measurable error in the calculation if the total time for neutron evaporation is less than about 10^{-9} seconds.

6. The mass of the nucleus does not change during the evaporation process. For Bi^{209}, this introduces an error of less than 1% in the angle of the recoil if not more than 4 neutrons are evaporated.

7. The changes in momenta of the recoiling nuclei due to loss of mass during the evaporation process is negligible. This allows the momentum of the recoil nucleus in the system of the struck nucleus to be calculated without taking into account the alteration of the system of the recoiling nucleus by the loss of neutrons. The error in the angle of the recoil nucleus due to this approximation is less than 2% in the least favorable case, where the errors add for the several neutrons.

Within the limits of the above approximations, the relation giving the angle of the recoil nucleus in the laboratory system for the case of three emitted neutrons is

$$\tan\varphi = \frac{\sqrt{1 - \cos^2\theta_3}}{\cos\theta_3 + \frac{p_a}{p_n}} \tag{1}$$

where φ is the angle of the recoil nucleus in the laboratory system with respect to the incident particle beam; p_a is the momentum of the incident particle; and p_n is given by the expression

$$p_n = \Big[2mE_1 + 2mE_2 + 2mE_3 + 4\sqrt{mE_1}\,\sqrt{mE_2}\cos\theta_1 + 2\sqrt{2mE_3}\cos\theta_2(2mE_1 + 2mE_2 + 4\sqrt{mE_1}\,\sqrt{mE_2}\cos\theta_1)^{1/2}\Big]^{1/2} \tag{2}$$

where θ_1 is the angle between the momentum vectors of the first and second

neutrons in the system of the struck nucleus; Θ_2 is the angle between the resultant of the first two neutrons and the momentum vector of the third neutron; Θ_3 is the angle between the resultant of all three neutrons and the direction of the incident particle beam; E_1, E_2 and E_3 are the kinetic energies of the first, second, and third neutrons, respectively, in the system of the recoiling nucleus; and m is the neutron mass, taken as 1 amu. Energies were calculated in Mev, and masses in amu.

Similarly, for the case of two emitted neutrons, we have

$$\tan\varphi = \frac{\sqrt{1 - \cos^2\Theta_2}}{\cos\Theta_2 + \frac{p_a}{p_n}} \tag{3}$$

where p_n is given by

$$p_n = (2mE_1 + 2mE_2 + 4\sqrt{mE_1}\sqrt{mE_2}\cos\Theta_1)^{1/2}. \tag{4}$$

All quantities are as defined above, except that here Θ_2 is the angle between the resultant of the two neutrons and the direction of the incident particle beam.

In order to produce an isotropic neutron distribution, the cosines of the above angles were selected randomly in the range -1 to 1. The neutron energies were selected according to the following scheme:

First, neutrons were selected in a random fashion to fit the distribution

$$P(E) = Ee^{-E/T}. \tag{5}$$

This was done in the case of the first neutron by selecting a neutron energy at random in the range from zero to $E_a + Q_1$ by multiplying $E_a + Q_1$ by a random number in the range zero to one. (E_a is the energy of the incident particle (a) in the center-of-mass system, and Q_1 is the Q value for the (a,n) reaction.) The maximum possible value of P(E) at the particular T selected was then calculated from

$$P(E)_{max} = T/e. \qquad (6)$$

$P(E)_{max}$ was then multiplied by a random number in the range zero to one. If the number thus obtained was greater than P(E) for the neutron energy selected, this neutron was rejected. The energy spectrum of neutrons surviving this operation was that of Eq. (5). The energies of subsequent neutrons were limited in the selection process to the energy available at that stage of the evaporation.

The next operation was the selection of neutrons from the above spectrum that led to the reaction under investigation. As an example, let us consider a reaction in which 3 neutrons are emitted. A flow diagram of this selection process is shown in Figure 2.

All the above neutron selection operations, as well as the recoil-angle calculations, were performed on an IBM type 701 digital computer. One to ten thousand cases of the reaction under investigation were tabulated at each incident particle energy studied. The time required for the calculation varied from about 2 minutes at the most favorable energies to several hours at energies where most of the neutrons were used up by competing reactions.

The following information was recorded for each reaction:

1. The number of recoil events in 1-degree intervals in the laboratory system, or the number of events in intervals corresponding to the angular increments of the catcher foil rings.

2. The above number modified by solid-angle corrections. (For comparison with experiments, the angular distributions were always integrated over intervals corresponding to the range of angles subtended by the rings cut from the catcher foils.)

3. The energies of the neutrons used in the calculation of the recoil-angles, tabulated separately for the various neutrons in order of emission as the number of neutrons per 0.1 Mev interval. (See Figure 3.)

4. The number and type of other reactions per thousand cases of the reaction under investigation.

The relative frequency of occurrence of the various competing reactions given by the Monte Carlo calculations was found to be quite sensitive to the value of the parameter T. Although the angular distributions were not much affected by changes in this parameter, an effort was made to use the value of T which gave the best fit to experimental cross section data.[10] For the system $Bi^{209} + He^{4}$, it was found that experimental values of the ratio of the $(\alpha,2n)$ and $(\alpha,3n)$ cross sections were matched by the Monte Carlo results using T = 1.4 Mev (Figure 4). For the system $Bi^{209} + H^{2}$, however, no single value of T yields cross section ratios that are in agreement with the experimental data, as may be seen in Figure 5. By cross-plotting, values of T that fit the experimental data at various energies are obtained (Figure 6). For the reaction $Bi^{209}(d,3n)Po^{208}$ values of T read from this graph were used in the Monte Carlo calculations. Calculations were also done based on the assumption of a constant T of 1.75 Mev, and these gave angular distributions which agreed with those using values of T from Figure 6 within the statistics of the thousand cases tabulated.

RESULTS AND CONCLUSIONS

The recoil angular distributions for the various reactions studied have the general shape shown for the reaction $Bi^{209}(\alpha,3n)At^{210}$ in Figure 7. The angle Θ_{max} is the maximum angle in the laboratory system to which the recoil can be deflected by the emission of neutrons. All recoils observed at angles greater than Θ_{max}, therefore, have been scattered by interaction with the target material or with gas molecules in the space between the target and the catcher foil. The deviation of the experimental points in the range of Θ_{max} from a smooth curve dropping to zero at Θ_{max} is, then, a measure of the scattering. It was found that for target thicknesses of 1 $\mu g/cm^2$ or less, scattering was negligible.

For the reaction $Bi^{209}(\alpha,3n)At^{210}$, the experimental angular distributions and those resulting from the Monte Carlo calculations were found to be in excellent agreement, except for scattering in the region of θ_{max}, over the entire range of incident particle energies investigated. Experimental and Monte Carlo results for nearly identical incident particle energies are shown for the $(\alpha,3n)$ reaction in Figure 7. The half-width (width of the angular distribution at half maximum, measured in degrees) was taken as a measure of the shape of the angular distribution for comparison of the experimental and Monte Carlo results at the various energies investigated. The half widths of the angular distributions for the reaction $Bi^{209}(\alpha,3n)At^{210}$ are plotted as a function of the energy available for neutron evaporation, $E_{\alpha cm} + Q_3$ (Figure 8).

The probable error in the half-widths of the angular distributions depends somewhat on the incident energy and the particular reaction involved. In general, errors are less than ±1/2 degree for the experiments and less than ±1 degree for the Monte Carlo calculations.

The general features of the curve shown in Figure 8 are readily explainable on the basis of the model assumed in the Monte Carlo calculations. At the threshold of the reaction, no kinetic energy is available for the outgoing neutrons, so that the neutrons can give no momentum to the recoiling nucleus. Therefore, all recoils must be found at zero degrees due to the forward momentum of the incident particle. As the incident particle energy is increased, the neutrons start contributing momentum to the nuclear recoil, and the half-width increases, rapidly at first, then more slowly, until all the neutrons are leaving the nucleus with about the same kinetic energy distributions, as shown in Figure 3. (The most probable energy under these conditions is about T Mev.) The half-width then remains nearly constant with increasing energy, the extra energy remaining as excitation energy of the residual nucleus. When the excitation energy of the residual nucleus begins to exceed the binding energy of the next neutron, the $(\alpha,4n)$ reaction begins to compete. Under these conditions, the $(\alpha,3n)$ reaction is only obtained from those events in which the neutrons have

higher than average energies. This causes the half width to increase again, and this increase will continue ad infinitum, or until another mechanism takes over.

A plot of half width versus energy for the reaction $Bi^{209}(\alpha,4n)At^{209}$ is shown in Figure 9. Both experimental and Monte Carlo points are included. The experimental data do not cover a very wide range of incident particle energies. This reaction could not be studied at lower energies because the presence of large amounts of At^{211} alpha activity produced by the $(\alpha,2n)$ reaction made the At^{209} alpha particles difficult to detect. The highest energy studied was determined by the maximum energy of the cyclotron. As may be seen from Figure 9, the angular distributions for this reaction are consistent with the isotropic evaporation model over the range of energies that were studied.

Because of the relatively long half-life of Po^{208}, in the study of the recoil angular distribution of the reaction $Bi^{209}(d,3n)Po^{208}$, it was desirable to use somewhat thicker targets than were used in the helium ion bombardments. For this reason, and because of the lower momentum of the incident deuterons, it was suspected that scattering was more extensive than in the case of the helium-ion-induced reactions. In Figure 10, the half-width of the recoil angular distribution of the (d,3n) reaction is shown as a function of target thickness. All these measurements were made at an incident deuteron energy of 23.5 Mev. At target thicknesses of about 6 $\mu g/cm^2$ bismuth or less, the half-width is well within the limits of error (experimental ~±1/2 degree, Monte Carlo ~±1 degree) of that for an infinitely thin target. Consequently, targets of about 6 $\mu g/cm^2$ were used in the angular distribution studies of the (d,3n) reaction.

In Figure 11 are shown experimental and Monte Carlo angular distributions for the (d,3n) reaction at the same incident particle energies. Figure 12 shows the variation of half-width with energy for the experiments and Monte Carlo

calculations for this reaction. The Monte Carlo calculations are in agreement with the experimental data within the limits of error. It may therefore be concluded that the (d,3n) reaction, like the (α,3n) and (α,4n) reactions, proceeds by a compound nucleus isotropic evaporation mechanism. Apparently the fact that the deuteron is a loosely bound particle of relatively large radius does not prevent its capture as an entity by the nucleus.

It is interesting that these three reactions appear to be explained by an isotropic evaporation model. As has been pointed out by Thomas,[11] Wolfenstein,[12] and Hauser and Feshbach,[13] it can be shown that particle emission from a compound nucleus will be isotropic if the level densities for both the compound and the residual nucleus are sufficiently high, and have a 2J + 1 spin dependence over the range of possible J values. Calculations by Bloch[14] based on the individual particle model indicate that this dependence is not found at excitation energies less than about 12 Mev. In the reactions studied in this work, excitation energies much less than this were common. At bombarding energies near the Q, the residual nucleus must be left in or near the ground state. However, it is quite possible that the necessary conditions for isotropy are much less stringent than the sufficient conditions described above.

ACKNOWLEDGMENTS

We wish to thank the crew of the Crocker Laboratory cyclotron for their assistance with innumerable bombardments. The assistance of John Morton and Ernest Valyocsik with several of the experiments is greatly appreciated, as are the efforts of Walter Hutchinson and Robert Freeman in programming the Monte Carlo calculations for the computer. It is a pleasure to thank Dr. José Gonzalez-Vidal, Mr. John Morton, and Dr. Walter M. Gibson for many stimulating discussions. One of us (P.F.D.) would like to acknowledge the support of the National Science Foundation during the period 1956-1958.

REFERENCES

1. R. B. Leachman, H. Atterling, and B. Åström, Physica 22, 1191 (1956).

2. E. M. Douthett and D. H. Templeton, Phys. Rev. 94, 128 (1954).

3. N. Sugarman, M. Campos, and K. Wielgoz, Phys. Rev. 101, 388 (1956).

4. S-C. Fung and I. Perlman, Phys. Rev. 87, 623 (1952).

5. S-C. Fung and A. Turkevich, Phys. Rev. 95, 176 (1954).

6. N. A. Perfilov et.al., in Conference of the Academy of Sciences of the USSR on Peaceful Uses of Atomic Energy (1955), Vol. 4, p. 55.

7. R. E. Batzel and G. T. Seaborg, Phys. Rev. 82, 607 (1951).

8. J. B. Ball, A. W. Fairhall, and I. Halpern, Phys. Rev. 114, 305 (1959).

9. The Staff of the Research Laboratory of Hopkin and Williams, Ltd., Organic Reagents for Metals and for Certain Acid Radicals (Hopkin and Williams, London, 1938).

10. E. L. Kelly and E. Segrè, Phys. Rev. 75, 999 (1949).

11. R. G. Thomas, Phys. Rev. 97, 224 (1955).

12. L. Wolfenstein, Phys. Rev. 82, 690 (1951).

13. W. Hauser and H. Feshbach, Phys. Rev. 87, 366 (1952).

14. C. Bloch, Phys. Rev. 93, 1094 (1954).

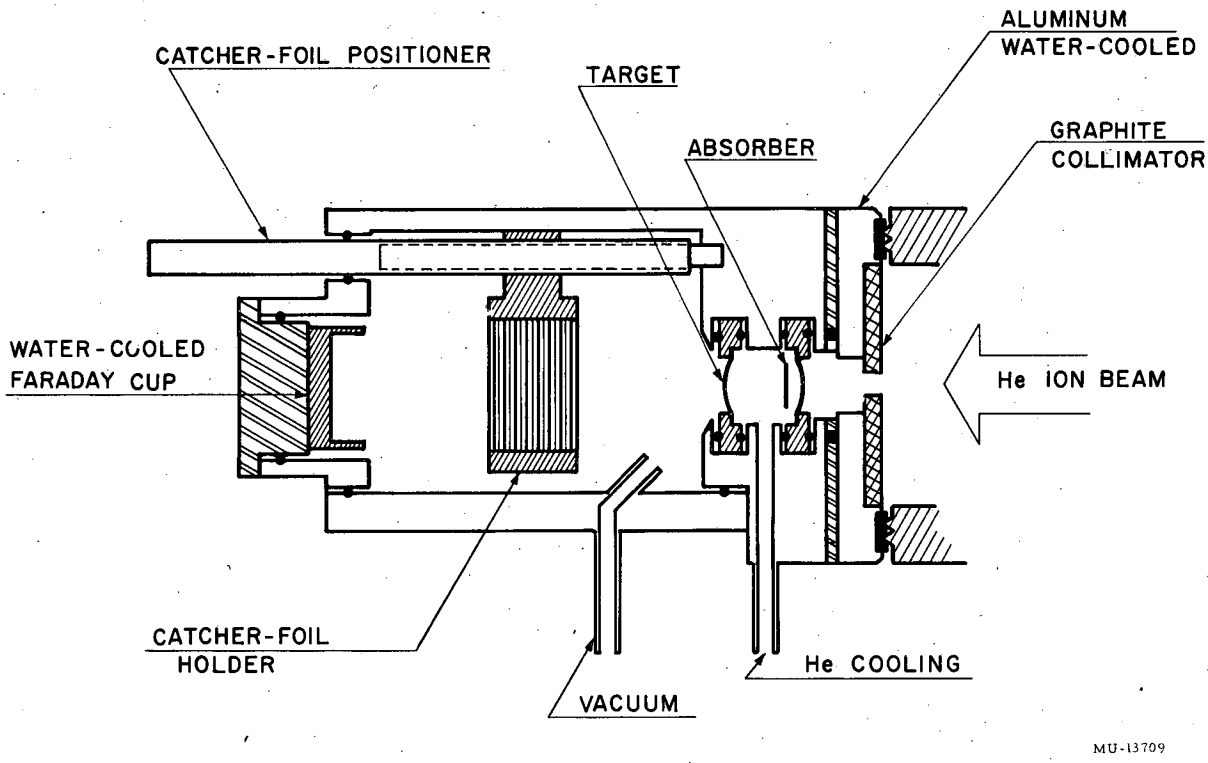

Fig. 1. Recoil target assembly.

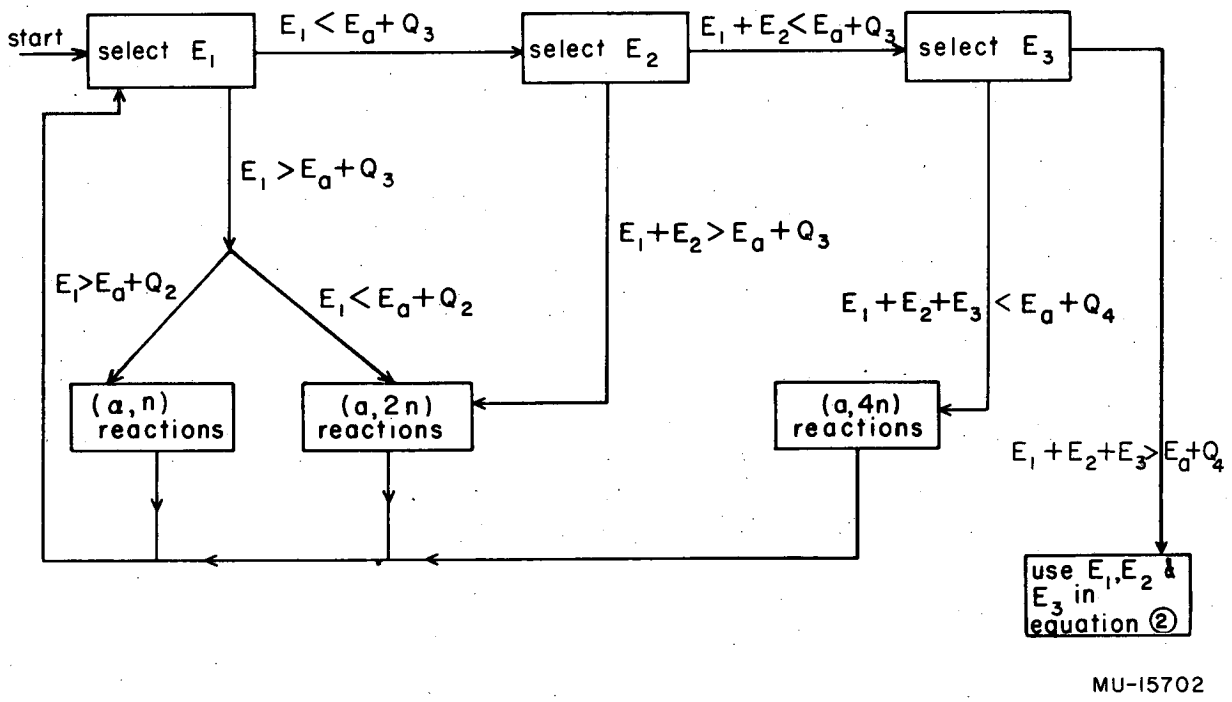

Fig. 2. Flow diagram of Monte Carlo neutron energy selection scheme for an (a, 3n) reaction. E_a is the energy of the incident particle in the center-of-mass system; Q_1, Q_2, Q_3, and Q_4 are the Q-values for the (a, xn) reactions; $E_1 < E_a + Q_1$; $E_2 + Q_2 - E_1$; and $E_3 < E_a + Q_3 - E_1 - E_2$.

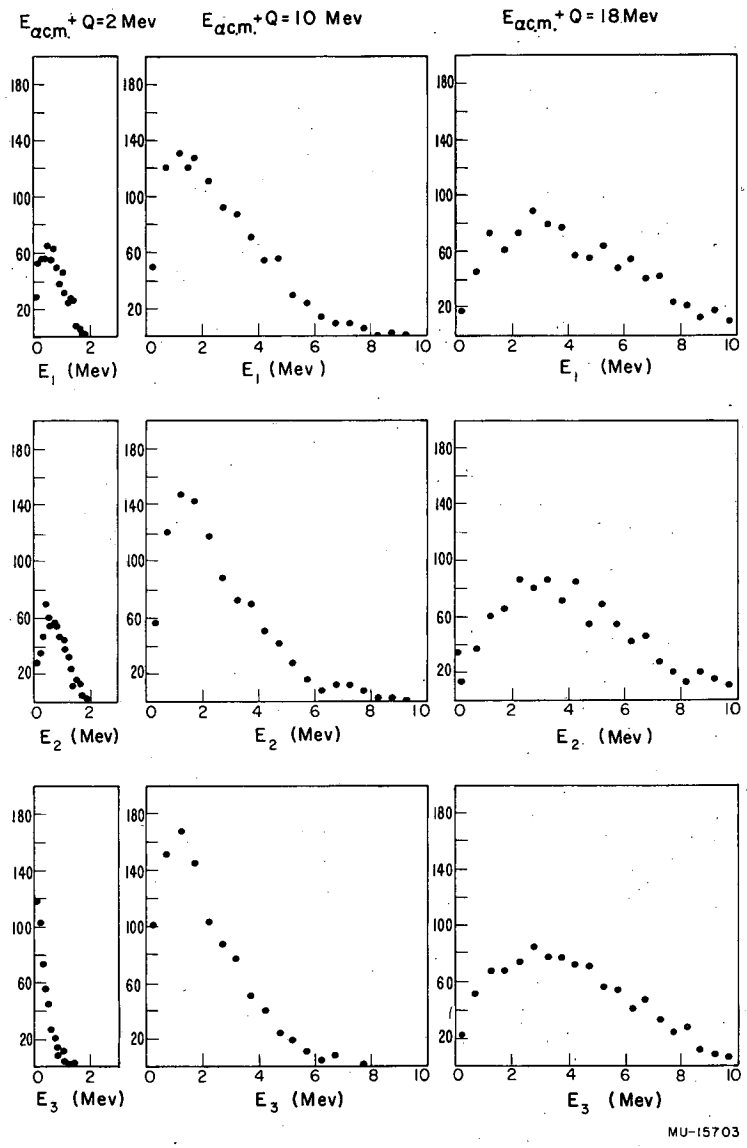

Fig. 3. Energy spectra of neutrons leading to the reaction $Bi^{209}(\alpha, 3n)At^{210}$ (T = 1.40 Mev).

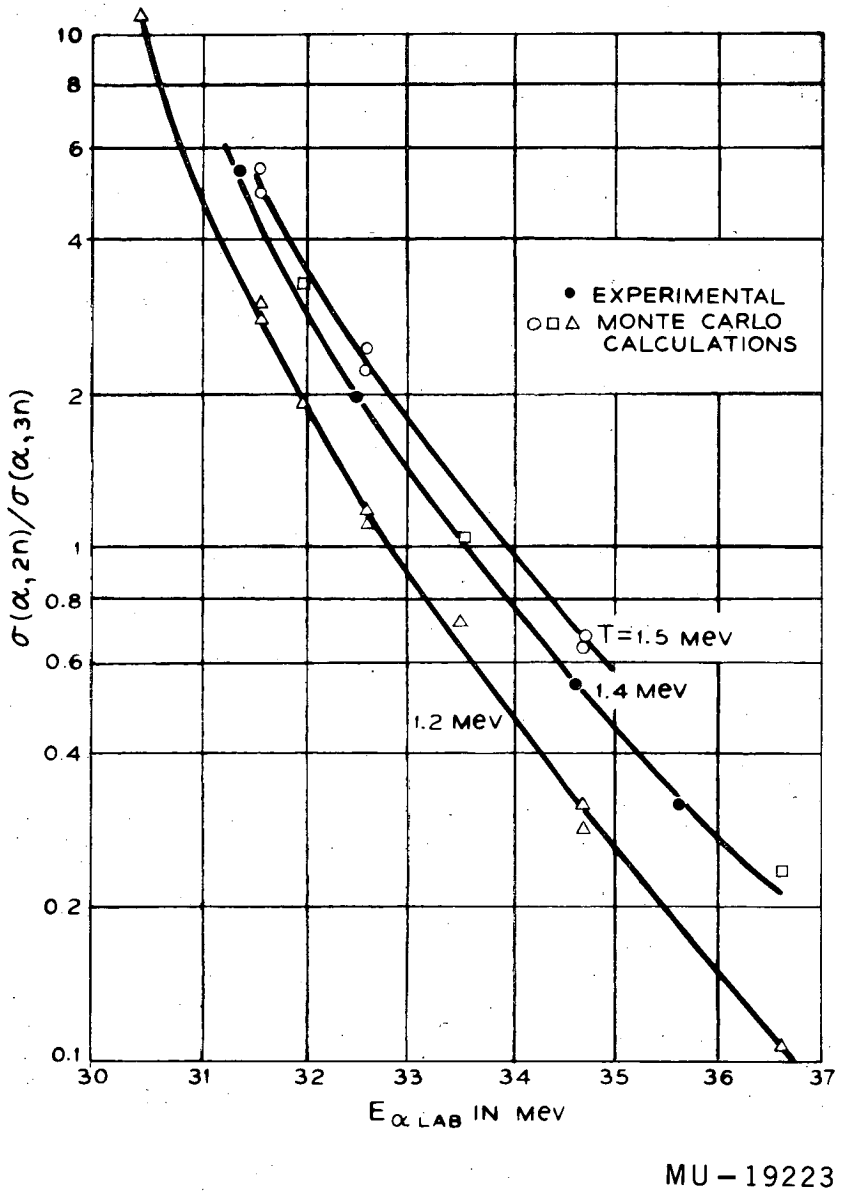

Fig. 4. Ratio of cross sections for the reactions $Bi^{209}(\alpha, 2n)At^{211}$ and $Bi^{209}(\alpha, 3n)At^{210}$ as a function of incident particle energy.

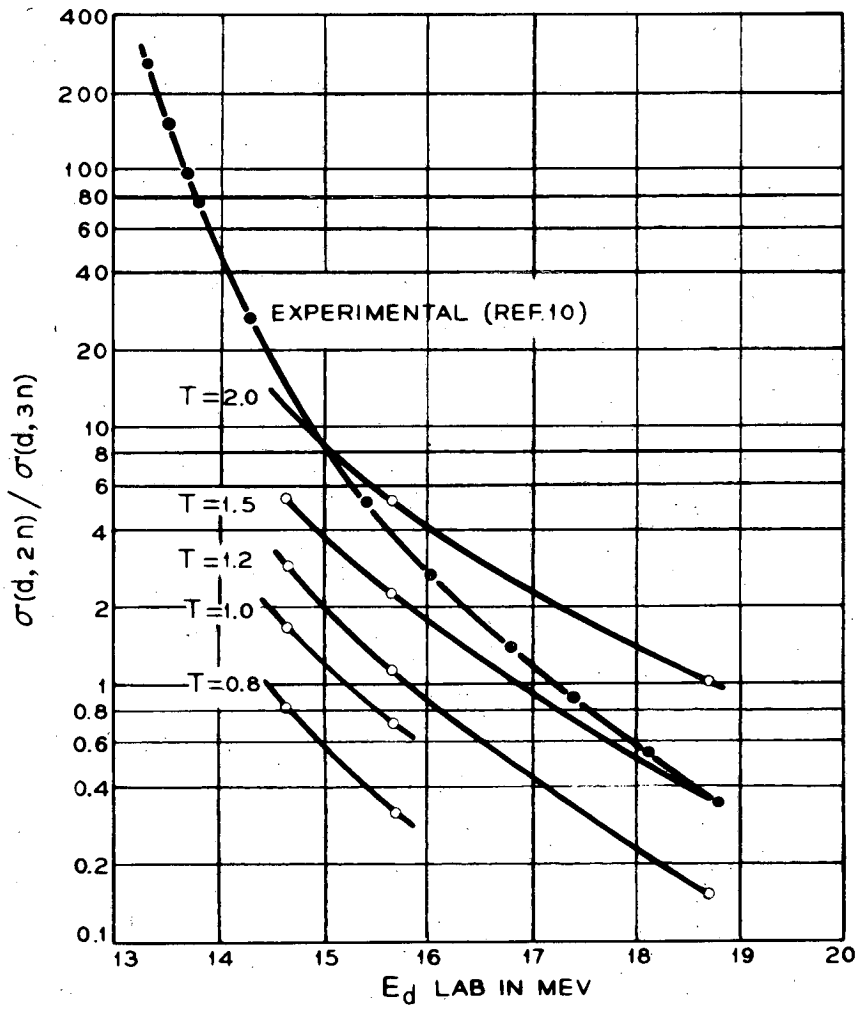

MU-19224

Fig. 5. Ratio of cross sections for the reactions $Bi^{209}(d, 2n)Po^{209}$ and $Bi^{209}(d, 3n)Po^{208}$ as a function of incident particle energy (Monte Carlo and experimental results).

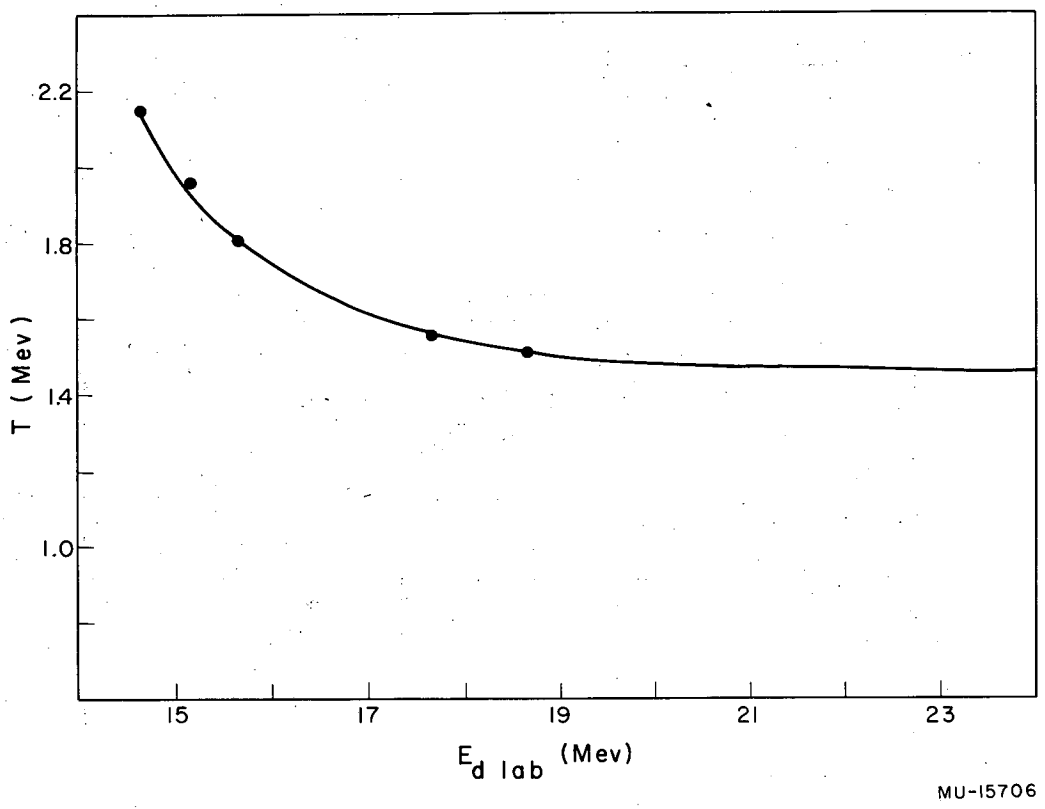

Fig. 6. T as a function of incident deuteron energy for the system $Bi^{209} + H^2$.

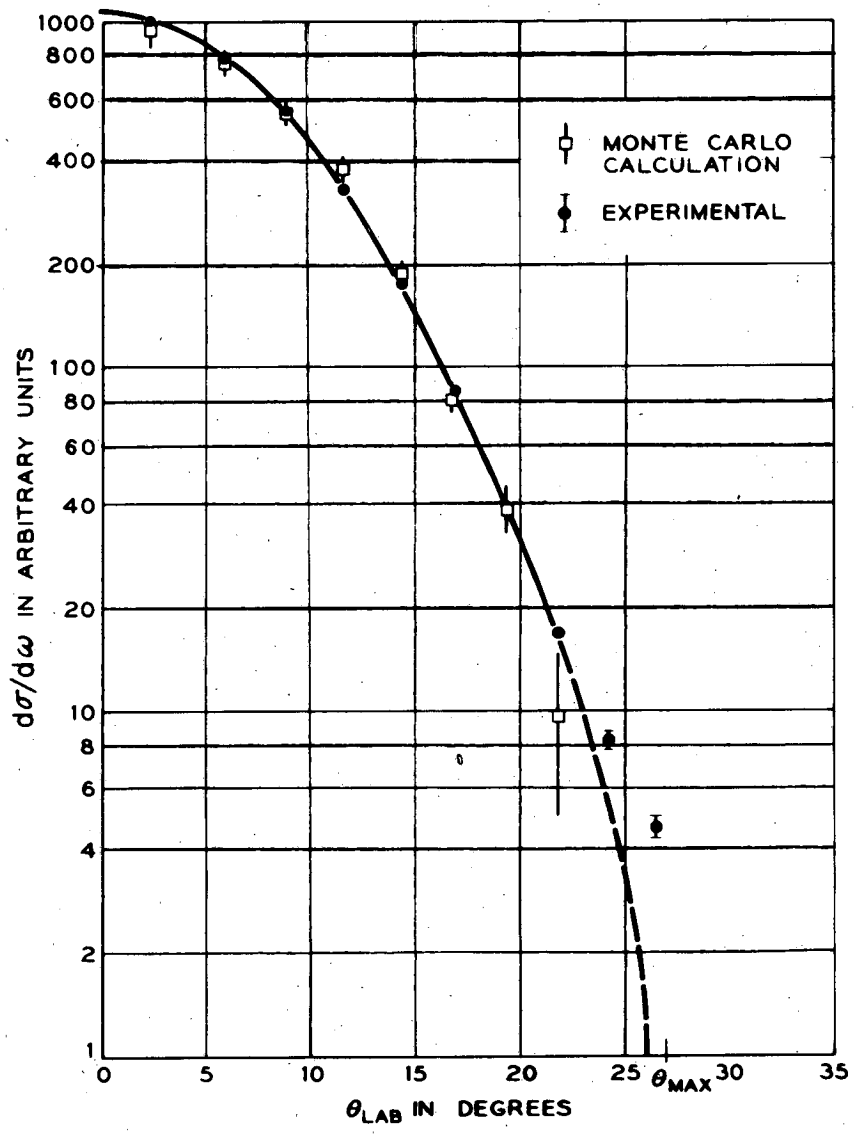

MU-19225

Fig. 7. Monte Carlo and experimental recoil angular distributions for the reaction $Bi^{209}(\alpha, 3n)At^{210}$. Standard deviations are shown. The solid curve is drawn through the experimental points ($E_{\alpha_{cm}} + Q = 9.7$ Mev for the experiment and 10.0 Mev for the Monte Carlo calculations); (0.88 $\mu g/cm^2$ Bi^{209}).

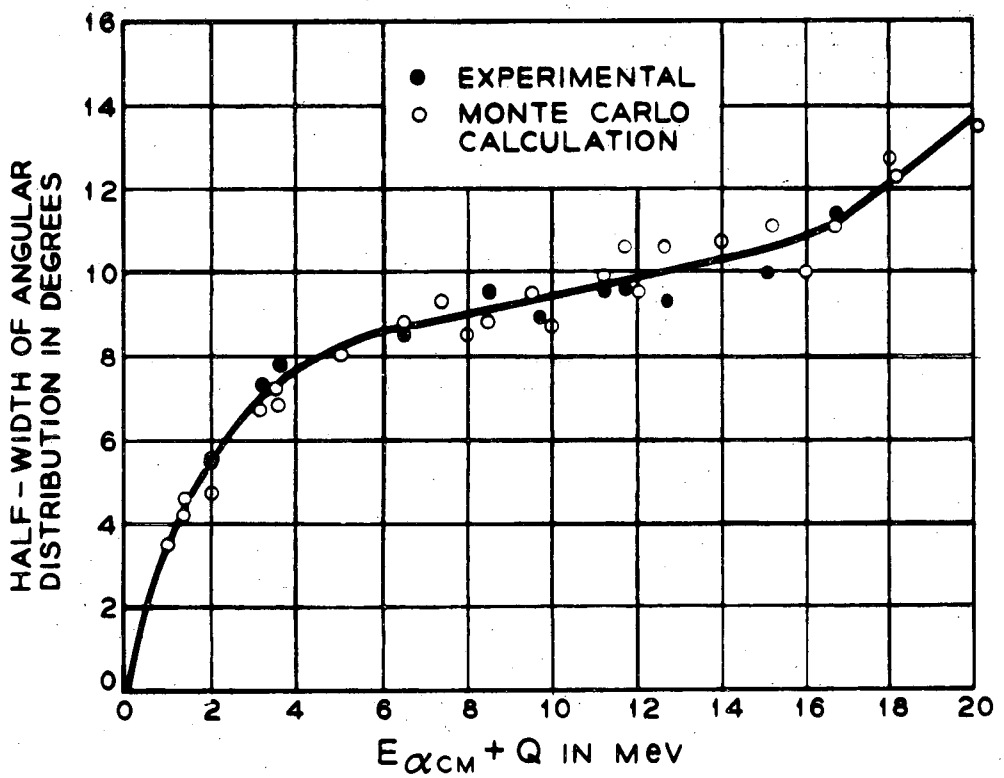

MU-19226

Fig. 8. Angular distribution half-width as a function of $E_{\alpha cm} + Q$ for the reaction $Bi^{209}(\alpha, 3n)At^{210}$ (T = 1.40 Mev).

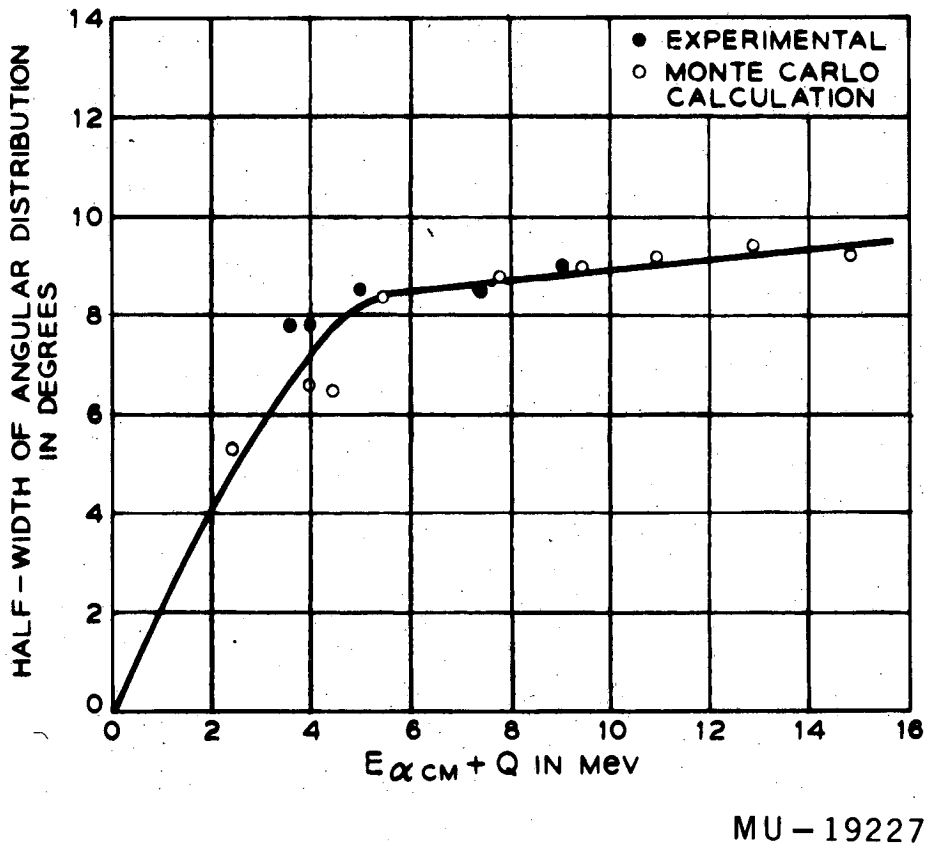

Fig. 9. Angular distribution half-width as a function of $E_{\alpha_{cm}} + Q$ for the reaction $Bi^{209}(\alpha, 4n)At^{209}$ (T = 1.40 Mev).

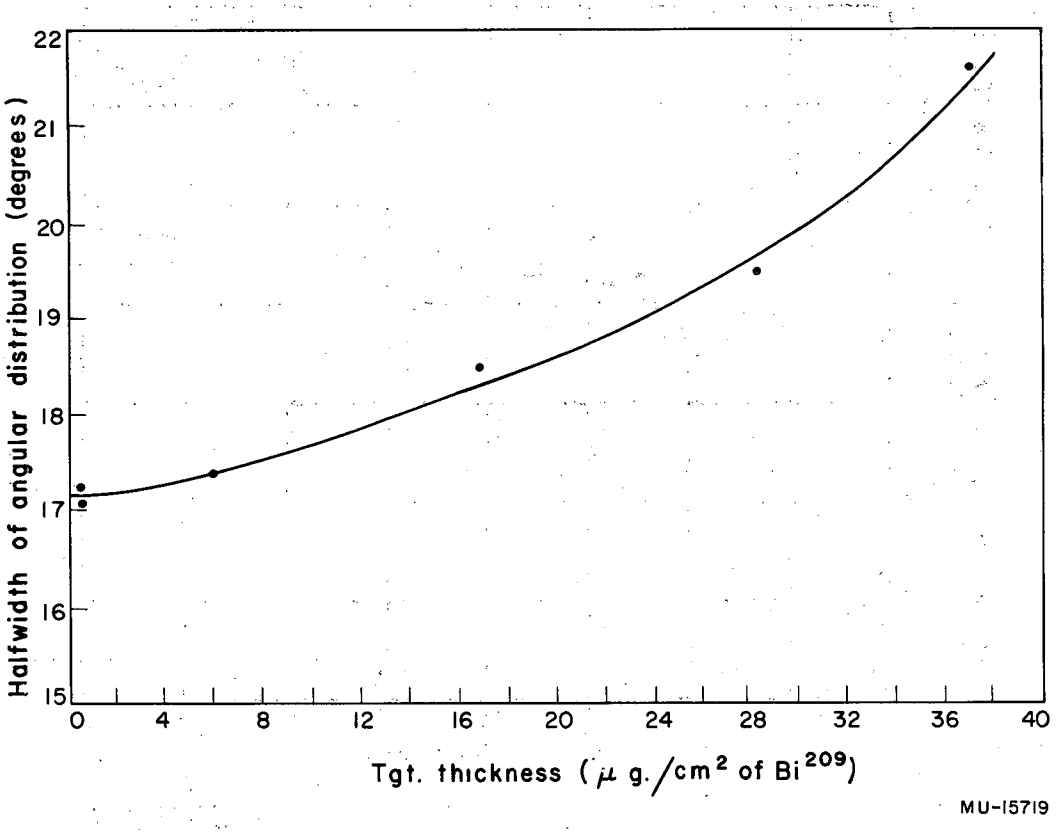

Fig. 10. Half-width of angular distribution as a function of target thickness for the reaction $Bi^{209}(d, 3n)Po^{208}$ (Ed = 23.5 Mev).

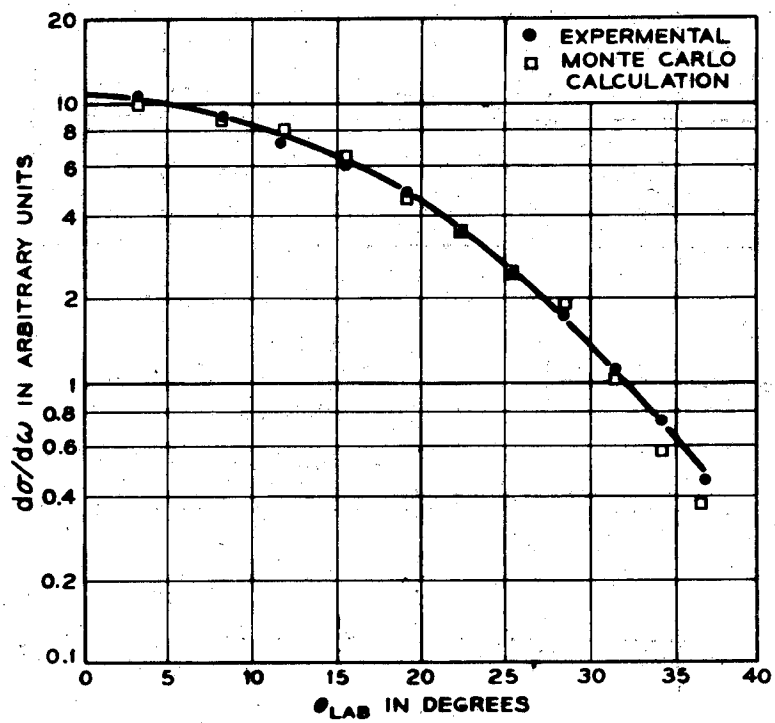

MU-19228

Fig. 11. Monte Carlo and experimental angular distributions for the reaction $Bi^{209}(d, 3n)Po^{208}$ ($E_{d_{cm}} + Q = 11.7$ Mev).

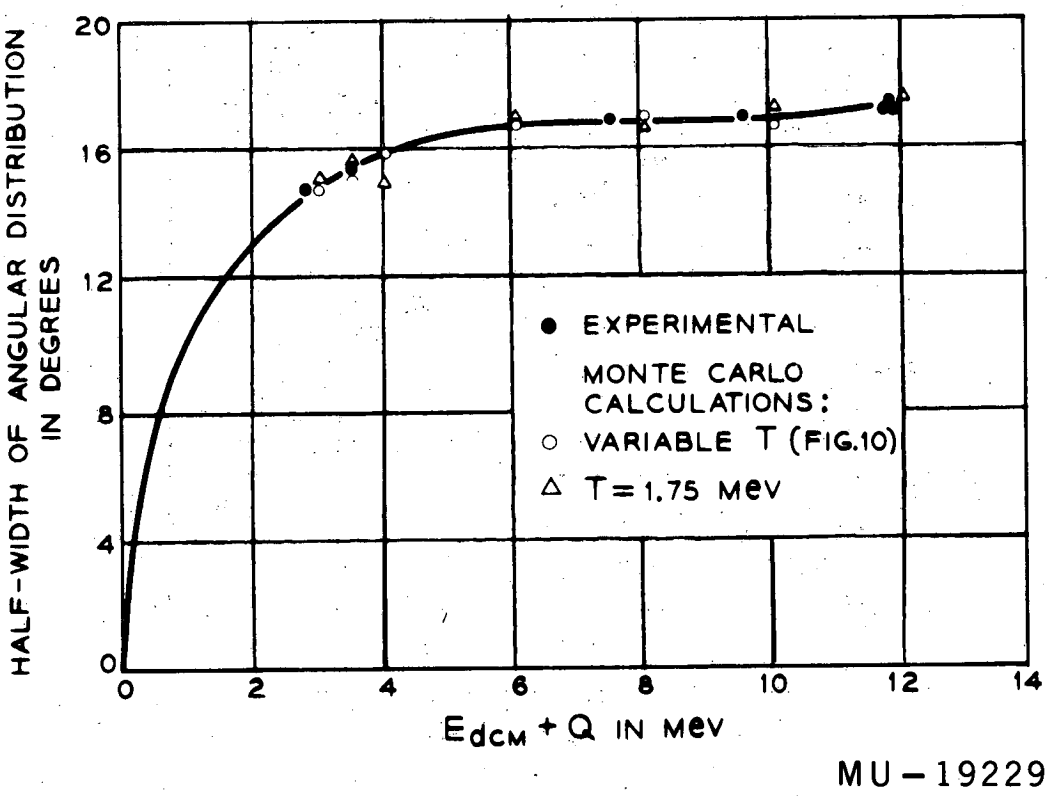

Fig. 12. Angular distribution half-width as a function of $E_{d_{cm}} + Q$ for the reaction $Bi^{209}(d, 3n)Po^{208}$.

This report was prepared as an account of Government sponsored work. Neither the United States, nor the Commission, nor any person acting on behalf of the Commission:

A. Makes any warranty or representation, expressed or implied, with respect to the accuracy, completeness, or usefulness of the information contained in this report, or that the use of any information, apparatus, method, or process disclosed in this report may not infringe privately owned rights; or

B. Assumes any liabilities with respect to the use of, or for damages resulting from the use of any information, apparatus, method, or process disclosed in this report.

As used in the above, "person acting on behalf of the Commission" includes any employee or contractor of the Commission, or employee of such contractor, to the extent that such employee or contractor of the Commission, or employee of such contractor prepares, disseminates, or provides access to, any information pursuant to his employment or contract with the Commission, or his employment with such contractor.