UCRL -9098

UNIVERSITY OF CALIFORNIA

Ernest O. Lawrence Radiation Laboratory

TWO-WEEK LOAN COPY

This is a Library Circulating Copy which may be borrowed for two weeks. For a personal retention copy, call Tech. Info. Division, Ext. 5545

BERKELEY, CALIFORNIA

DISCLAIMER

This document was prepared as an account of work sponsored by the United States Government. While this document is believed to contain correct information, neither the United States Government nor any agency thereof, nor the Regents of the University of California, nor any of their employees, makes any warranty, express or implied, or assumes any legal responsibility for the accuracy, completeness, or usefulness of any information, apparatus, product, or process disclosed, or represents that its use would not infringe privately owned rights. Reference herein to any specific commercial product, process, or service by its trade name, trademark, manufacturer, or otherwise, does not necessarily constitute or imply its endorsement, recommendation, or favoring by the United States Government or any agency thereof, or the Regents of the University of California. The views and opinions of authors expressed herein do not necessarily state or reflect those of the United States Government or any agency thereof or the Regents of the University of California.

UCRL-9098

UNIVERSITY OF CALIFORNIA

Lawrence Radiation Laboratory
Berkeley, California

Contract No. W-7405-eng-48

DIGITAL-COMPUTER ANALYSIS OF DATA FROM BUBBLE CHAMBERS
IV. THE KINEMATIC ANALYSIS OF COMPLETE EVENTS

Arthur H. Rosenfeld and James N. Snyder

February 16, 1960

Contents

Abstract 3

I. Introduction 4

II. Computer Aspects of the System 16

III. The Low-Energy K^--p Experiment 19

IV. General Organization of KICK 26

V. The KICK Processing Routines 38

A. KICK Main Read Routine 38

B. Track-Read Routine 41

C. Setup Routine 45

D. Vertex Routine 52

E. Swim Routine 61

F. Auxiliary Computation Routine 63

G. Track-Bank-Interchange Routine 64

H. Print (Output) Routine 65

I. Reject Routines 68

J. End Routine 69

VI. The Event-Type Control Subroutines 72

VII. Extensions of KICK 91

A. Vertex Fits with a Fixed Momentum 91

B. Vertex Fits Conserving Three-Momentum Only 92

VIII. Conclusions 94

IX. Acknowedgments 95

DIGITAL-COMPUTER ANALYSIS OF DATA FROM BUBBLE CHAMBERS IV. THE KINEMATIC ANALYSIS OF COMPLETE EVENTS

Arthur H. Rosenfeld

Lawrence Radiation Laboratory and Department of Physics
University of California, Berkeley, California

and

James N. Snyder

Digital Computer Laboratory and Department of Physics
University of Illinois, Urbana, Illinois

February 16, 1960

ABSTRACT

A digital computer program called KICK (K-meson Interaction Coplanarization and Kinematics), which carries out the analysis of complete bubble chamber events, is described. The program inputs data from a single-track analysis program which has used raw track measurements to perform the spatial reconstruction of tracks and has fitted appropriate curves to them. KICK consists of a set of general processing or analysis routines, each of which is capable of carrying out one of the unique processing steps to which a given event may have to be subjected for proper analysis, for example "Input Event", "Fit Vertex", "Transform Variables Along Track", "Output Results", etc. Also included is a set of event-type control subroutines each of which, calling upon the proper sequence of these general processing routines, is able to carry out the desired analysis of a particular type of event. Although originally prepared for the experiment on the interaction of low-energy K^- mesons (0 to 400 Mev/c) and protons), the program is extendable (and has been extended) to other bubble chamber experiments.

DIGITAL COMPUTER ANALYSIS OF DATA FROM BUBBLE CHAMBERS IV. THE KINEMATIC ANALYSIS OF COMPLETE EVENTS*

Arthur H. Rosenfeld

Lawrence Radiation Laboratory and Department of Physics
University of California, Berkeley, California

and

James N. Snyder

Digital Computer Laboratory and Department of Physics
University of Illinois, Urbana, Illinois

I. INTRODUCTION

The rate at which modern bubble chambers associated with high-energy accelerators are able to gather data demands the mechanization of film-scanning and measuring procedures to extract the data, and the use of high-speed computers to analyze those data. Such chambers can easily produce several tens of thousands of photographs per day. In some experiments it may be necessary to scan hundreds of photographs to find an event that must be measured and analyzed; in others there may be such an event in every picture. Accurate experiments with good statistics may demand analysis of thousands of events of a given type. This becomes feasible only if the measurement and analysis systems can maintain the data rate imposed by the chamber.

This paper is the fourth in a series describing the application of high-speed electronic digital computers to the analysis of bubble chamber data. The first[1] (henceforth referred to as I) describes the over-all system, the data rates and problems involved, and the three individual programs in the system, each of which is the subject of a subsequent paper. An <u>event</u> is regarded as being made up of one or more vertices from which the individual particle <u>tracks</u>

*Work done under the auspices of the U. S. Atomic Energy Commission.

emanate(for an example see Fig. 1; tracks are labeled with arabic numerals, vertices with roman numerals). The first program in the analysis system is described in the second paper[2] of this series (henceforth referred to as II), and is called PANG (momentum = P and ANGles), thereby following the established practice of giving computer programs mnemonic and descriptive titles. The basic input data for this program are measurements of each track in two or three stereoscopic views; as many x-y coordinate pairs as practical are recorded along each track. The program reconstructs each individual track in space, takes magnetic-field inhomogeneities into account, fits an appropriate space curve to the track, takes account of the particle's energy loss in the chamber medium, and computes the physical variables (called the measured variables) that characterize the track, together with their assigned errors. The output from this program is twofold; one magnetic tape containing information nicely edited and arranged for printing in a form convenient for human consumption, and a second magnetic tape containing the same information densely packed in binary code suitable for input to subsequent programs in the system which combine tracks into vertices and vertices into events. It should be emphasized that PANG deals only with individual tracks, which are processed independently, without reference to the existence of other tracks in the event. The binary output of PANG consists of one file for each event. This file consists of one master record of 10 words pertaining to the whole event, followed by a track record of 38 words for each track. (For the example of Fig. 1, there would be four track records, since Track 15, the neutron, is not seen, measured, or processed by PANG). Quite frequently a track is ambiguous, for example at high energy a π^+ track and a p track can be visually indistinguishable. It is, in fact, one of the tasks of KICK to resolve such ambiguities by kinematic analysis of the entire event. At the track stage,

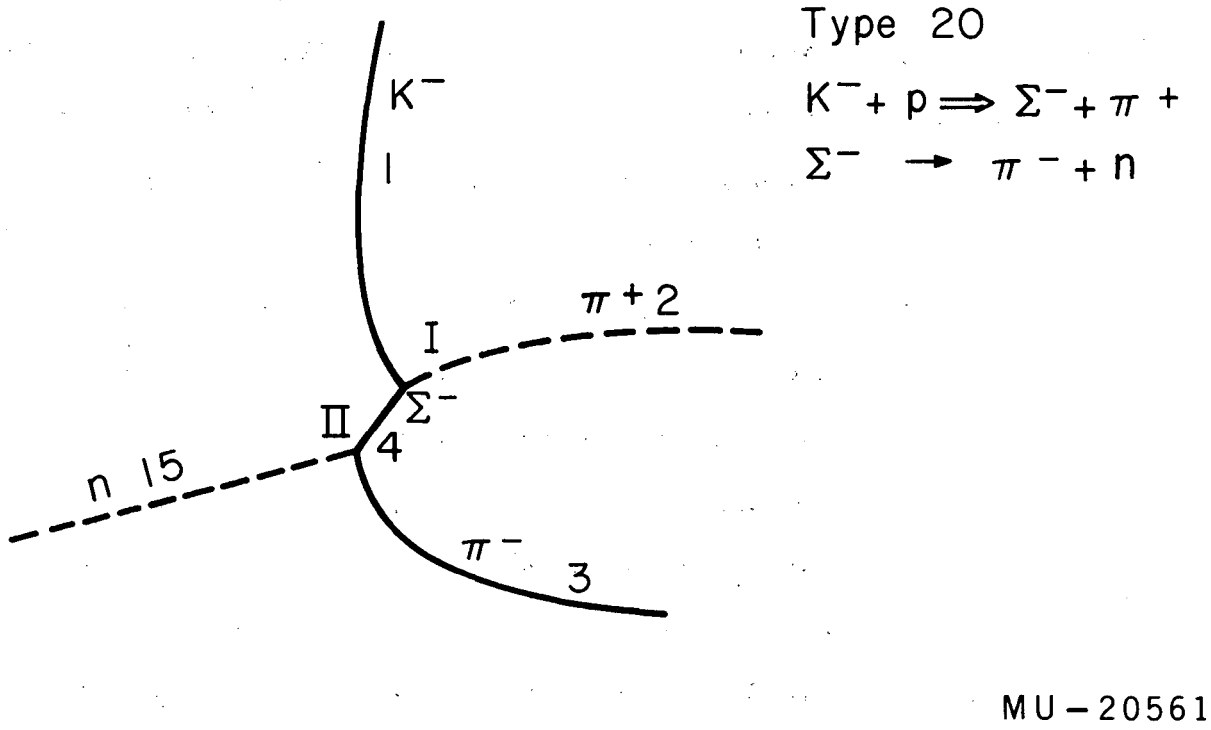

Fig. 1. A typical bubble chamber event (Type 20).

PANG simply produces two sequential records for this track, each generated from the same geometrical measured information but each using a different mass interpretations. The precise information contained in this PANG output is given in Table I. (The PANG words are marked with a *) .

The second program in the analysis system, GUTS, is described in the third paper[3] of the series (referred to as III). This program fits vertices (as opposed to tracks). It is constructed as a closed subroutine which can be incorporated into any large analysis program.[4] It contains the arithmetical part of the system, which takes all the measured variables characterizing the tracks that meet at a given vertex and adjusts them according to a least-squares fitting procedure subject to the four constraints of conservation of the total momentum-energy four-vector at a vertex. After GUTS has processed a vertex, these fitted variables, their errors, and the conventional χ-squared quantity characterizing the "goodness of fit" are available.

The subroutine GUTS is incorporated in the third program of the system. This program, which analyzes events as a whole, forms the subject of this paper. Since it was originally prepared to treat the processes occurring when low-energy K^- mesons are incident on protons (in a hydrogen bubble chamber), it was called KICK (K^--Interaction Coplanarization and Kinematics). However, the program was formulated in a sufficiently general fashion that as far as can be foreseen it is capable of being extended to process all bubble chamber experiments presently contemplated by the Alvarez Hydrogen Bubble Chamber Group at Berkeley. It is already in use on experiments with low- and high-energy K^- mesons incident on hydrogen and on deuterium, and anti-proton interactions in hydrogen. KICK is a relatively simple control program, operating a large group of subprograms (one of which is GUTS) which carry out the many and varied steps and operations necessary for the analysis of a complete event.

Table I

Information in Main Bank and a Track Bank
(Data arising in PANG are starred)
(MRM = machine representation mode; FP = floating point,
I = integer, BCD = binary coded decimal.)

Main Bank (MB)

Word	Contents	MRM	Unit	Definition, comments
0	ID No.	I	-	Identification number for a KICK run.
1	STM	I	-	Secondary Type Mark.
2*	Date	BCD	-	The positions of certain characters (namely blanks) in MB + 2 are tested on read-in and identify the record as MB
3*	measured	BCD	-	
4*	Date	BCD	-	
5*	PANGed	BCD	-	
6*	N_M	BCD	-	Measurement number. Advances on subsequent passes of event through system.
7*	OPID	I	-	Measurering operator's identification number.
8*	PUC and EXP. No.	BCD	-	Pickup command and identification number of bubble chamber experiment.
9*	ET	I	-	Event-type number.
10*	Serial	BCD	-	Contains film roll and frame numbers and number of beam track leading into event.
11*	number	BCD		
12	PUC (zero or nonzero	I	-	Pickup command, unpacked and converted from word 8.

Main Bank (MB) continued Table I (continued)

Word	Contents	MRM	Unit	Definition, comments
13	D_h	FP	cm	Distance back from vertex at which incident track's kinematic variables are specified. See footnote 8 below and Paper III.
14	GPM (zero or non-zero)	I	-	Good print mark. Becomes non-zero in processing sequence only if event fits some hypothesis and is so output.
15	A	FP	-	See below (18-26).
16	SA (positive or negative)	I	-	Ambiguity sign. Word is + or - according to which sign is to be selected when solving a quadratic equation for a missing momentum in GUTS (see Paper III), 0c case.
17	C_P	I	-	Print counter. Labels output, i.e., advances by one for each output during processing of a given event.
18	D	FP	-	A, D, E, . . . L indicate spaces into which numerical results pertaining to a given event are placed. They are then available in the output. Their significance varies with the event type.
19	E	FP	-	
20	F	FP	-	
21	G	FP	-	
22	H	FP	-	
23	I	FP	-	
24	J	FP	-	
25	K	FP	-	
26	L	FP	-	
27	CPM	I	-	Check-point mark. Is set to various integers at various stages of event-type subroutines to indicate on the output the stage reached in the sequence.

Main Bank (MB) continued Table I (continued)

Word	Contents	MRM	Unit	Definition, comments
28	PID No.	I	-	Parameter identification number. Denotes which set of parameters is being used.
29	W	FP	cm	"Wall." Determines for GUTS (Paper III) the maximum length a "missing" (zero-length) track may have and signals (for GUTS) the presence of such a track.
30	M_M	FP	Mev	The mass (and its error) not accounted for by visible tracks at a vertex. Computed by GUTS (see Paper III).
31	δM_M	FP	Mev	
32	AM (zero or nonzero)	I	-	Ambiguity mark. If nonzero, signals GUTS to reverse sign in word 16 if momentum computed using 16 turns out negative.

A. Track Bank (TB)

Word	Contents	MRM	Unit	Definition, comments
0	ϕ	FP	radians	Azimuth of track. 2^{-29} bit used as a flag for WALL
1	tan λ	FP	-	λ = dip of track.
2	k	FP	$(\frac{Mev}{c})^{-1}$	Projected curvature of track, $k = \frac{1}{p \cos \lambda}$, p = momentum.
3	MM (zero or non-zero)	I	-	See footnote 10 Matrix mark; 0 if error matrix diagonal, not 0 otherwise.
4	CR 0, 1, or 3.	I	-	Constraint reduction. The number of variables missing from this track and consequently the number of constraints that must be removed from any vertex in which it participates.
5	$\delta\phi\,\delta\phi$	FP	$(rad)^2$	See footnote 10. The 3X3 error matrix of the particle. If diagonal, $(\delta\phi)^2$, $(\delta \tan\lambda)^2$, $(\delta k)^2$ are placed in words 5, 6, 7. If k variable is missing, $\delta\phi\,\delta\phi$, $\delta\phi\,\delta(\tan\lambda)$, $\delta(\tan\lambda)\,\delta\phi$, $\delta(\tan\lambda)\,\delta(\tan\lambda)$ are placed in words 5, 6, 7. 8. If the matrix is diagonal in this case, $(\delta\phi)^2$, $\delta(\tan\lambda)^2$ are placed in words 5, 6.
6	$\delta\phi\,\delta(\tan\lambda)$	FP	rad	
7	$\delta\phi\,\delta k$	FP	$rad(\frac{Mev}{c})^{-1}$	
8	$\delta(\tan\lambda)\,\delta\phi$	FP	rad	
9	$\delta(\tan\lambda)\,\delta(\tan\lambda)$	FP	-	
10	$\delta(\tan\lambda)\,\delta k$	FP	$(\frac{Mev}{c})^{-1}$	
11	$\delta k\,\delta\phi$	FP	$(\frac{Mev}{c})^{-1}$ rad	
12	$\delta k\,\delta(\tan\lambda)$	FP	$(\frac{Mev}{c})^{-1}$	
13	$\delta k\,\delta k$	FP	$(\frac{Mev}{c})^{-2}$	
14	-SM (zero or non-zero)	I	-	See footnote 9. Negative stopping mark. Nonzero only for negative stopping("S") tracks

A. Track Bank (TB) Table II (continued)

Word	Contents	MRM	Unit	Definition, comments
15	LSZ (1, 2, or 3)	I	-	End character of track. Set to 1 if track leaves chamber (L), 2 if it stops in chamber (S), 3 if track is zero length (Z), i.e., a track known to participate in the event but so short as to be invisible.
16	FTN	I	-	Future track number. If this track connects the current event with another event yet to be processed, FTN is the track number this track will have in the future event.
17*	Track No.	I	-	Track number of this track in current event.
18*	M	FP	Mev	Mass of particle; last two binary digits denote charge.
19*	L	FP	cm	Length of track.
20*	δL	FP	cm	Error in above.
21*	$\pm k_M$	FP	$(Mev/c)^{-1}$	PANG-computed projected curvatures and their errors at midpoint, beginning, and end of track. The curvatures are given the sign observed in the chamber (by definition + curvature is that which would be appropriate for a + particle). PANG considers only the apparent curvature and not the true charge of the particle.
22*	δk_M	FP	$(Mev/c)^{-1}$	
23*	$\pm k_B$	FP	$(Mev/c)^{-1}$	
24*	δk_B	FP	$(Mev/c)^{-1}$	
25*	$\pm k_E$	FP	$(Mev/c)^{-1}$	
26*	δk_E	FP	$(Mev/c)^{-1}$	
27*	k_{LB}	FP	$(Mev/c)^{-1}$	Projected curvature and its error, computed at Beginning of track from observed Length, using range momentum relation; k_{LB} has positive sign.
28*	δk_{LB}	FP	$(Mev/c)^{-1}$	

A. Track Bank (TB) Table II (continued)

Word	Contents	MRM	Unit	Definition, comments
29*	ϕ_B	FP	deg	Azimuth of track at beginning and end; $0^o \leq \phi < 360^o$.
30*	ϕ_E	FP	deg	
31*	$\delta\phi$	FP	deg	Error in above two quantities.
32*	$(\tan \lambda)_B$	FP	-	Tangents of dip angle at beginning and end of track.
33*	$(\tan \lambda)_E$	FP	-	
34*	$\delta (\tan \lambda)$	FP	-	Error in above two quantities.
35*	$\delta P_c/\delta P_M$	FP	-	Ratio of Coulomb scattering error to measurement error.
36*	$\delta k_{LB} \; \delta \tan \lambda$	FP	$(Mev/c)^{-1}$	Correlation term.
37*	$-[10^4(LSZ) + 10^3(FTN)]2^{18}$	I	-	Packed form of words 15 and 16 from PANG.
38*	N_{NP}	I	-	Numbers of points measured on this track on views P and Q.
39*	N_{NQ}	I	-	
40*	$\pm P_B$	FP	Mev/c	Momentum from curvature, beginning and end.
41*	$\pm P_E$	FP	Mev/c	
42*	P_{LB}	FP	Mev/c	Momentum from length via range-momentum relation at beginning.
43*	$\delta P/P$	FP	-	Fractional momentum error, from curvature.

A. Track Bank (TB) Table II (continued)

Word	Contents	MRM	Unit	Definition, comments
44*	λ_B	FP	deg	Dip at beginning of track.
45*	x_B	FP	cm	Space coordinates of beginning and end of track in chamber.
46*	y_B	FP	cm	
47*	z_B	FP	cm	
48*	x_E	FP	cm	
49*	y_E	FP	cm	
50*	z_E	FP	cm	
51*	σ_{xy}	FP	cm	Standard deviation of measured points from fit, projected in x-y plane.
52*	σ_z	FP	cm	Standard deviation of measured points in x-z plane.
53*	$2^{18} P + Q$	I	-	P and Q are the view numbers used for the two stereoviews of this track.
54*	0 by PANG	FP	-	Not used by PANG. KICK places one of three quantities in this word: $3 - \left\lvert \frac{\lvert k_M \rvert - \lvert k_{beam} \rvert}{\delta k_M} \right\rvert$ for beam tracks where k_{beam} = known projected curvature of beam; $\frac{k_{LB} - k_B}{\delta k_B} + 3$ for L or Z tracks, $3 - \left\lVert \frac{k_{LB} - k_B}{\delta k_B} \right\rVert$ for S tracks. If this quantity is negative the track is inconsistent by 3 standard deviations.

As has been discussed in Paper I, the procedure outlined above of carrying out the analysis in stages--i.e., fitting tracks to measured points, combining tracks into vertices, and finally combining vertices into complete events--is open to criticism as a correct statistical procedure.

At the time when this program was undertaken several purely tactical considerations led to the writing of GUTS and KICK to deal with only one vertex at a time:

(a) The formulation seemed easier.

(b) A multivertex program would probably not fit into an 8192-word computer.

(c) More convenient human monitoring of the system is possible since output of results from any intermediate stage is available; failing events can be more easily understood.

(d) It can be shown that if the constraint equations (for the conservation of four-momentum) were linear, a succession of single-vertex fits would give the same results as a multivertex fit.
Actually the constraints are not linear, but the procedure used here has given satisfactory fits in the cases we have encountered. (This is discussed more in footnote 14.)

II. COMPUTER ASPECTS OF THE SYTEM

The system of programs was prepared for an IBM 704 Electronic Data Processing Machine having an 8192-word memory and a minimum of three tape units. No magnetic-drum memory or punched-card output is used. An on-line printer is used only incidentally. The system fills the 704 twice, requiring the analysis to be made in two steps. During the PANG phase the measurement data are input from a single magnetic tape which has been prepared on off-line auxiliary equipment that transcribes the punched output of the measuring machines onto the tape in binary-coded decimal (BCD) form. The analyzed track information is output to two tapes, one in BCD form for operating an off-line tape-controlled printer, the other in more efficiently packed binary form for subsequent input to KICK. Data errors detected by PANG are indicated on the on-line printer.

During the KICK phase the memory is again filled by the 3000-word KICK program plus the 5000-word GUTS subprogram. The binary tape prepared by PANG is input to KICK, which processes the events and outputs the fitted information on a single binary tape. Two additional tape units (for a total of four KICK tapes) improve the efficiency of the system. One contains the PANG and KICK programs themselves, thus saving the time necessary to input them from cards, the other is held available for diagnostic dumping of the machine contents in case a machine error or a data error has interfered with the program.

The binary output tapes from KICK constitute a "library" of analyzed events which need further processing prior to human use. They can be subjected to one or more of three subsequent operations:

1. Printing: input to a simple program for translation from binary to BCD in a convenient readable form. The BCD tape is printed on the tape-controlled printer.

2. Sorting: input to a program that can carry out such procedures as sorting, deleting, selecting, and merging events, and produce a tape (again in binary form) which in turn can be subjected to 1 or 3.

3. Statistical Analysis: input to programs which extract and tabulate information pertinent to a complete experiment from a set of events making up that experiment.

This stepwise processing and production of intermediate tapes is retained even when the system is used on a 704 with a 32,768-word memory, which could simultaneously hold and execute all programs of the system. The production of intermediate tapes makes it possible to monitor the system conveniently, to inspect intermediate results, and to diagnose malfunctions in the system.

Although KICK was prepared for the IBM 704, the logical features of the program should be adaptable to any computer of comparable speed and capacity. It is estimated that, at the cost of extra operating time and additional data manipulation, the main features could be embraced by a computer only one-half or one-quarter as fast or capacious. Hence the description of the features and operation of KICK and its logical flow diagrams includes a minimum of reference to the specific properties, details, and method of operation of the computer now being used. However, these details are not completely eliminated, since they serve to illustrate a very important point concerning a program of this nature. KICK is made up of a large, complicated set of logical tests, decisions, and processes. To compress these into 3000 words requires an efficient exploitation of the details and particular properties

of the computer being used. It requires efficient packing and coding of information into the binary computer words, and keeping in mind the availability of various parts of these words and the way in which the computer handles them. For example, in the 704, an operator who must choose one of two alternative procedures can test individually only the first and last binary digits of the 36-digit word. Therefore, data to be tested are preferably packed at (or as near as possible to) the beginning or end of a word. If a sequence of data must be cyclically tested, provision must be made to appropriately pack it into words and then cyclically shift it past one of these testing positions. This necessity for exploiting the detailed logical properties of the computer at hand implies that KICK is most efficiently programmed order by order[6] rather than by the use of an automatic coding system. Such systems are of great utility in the programming of arithmetic or algebraically expressed material. They could materially aid in the programming of the arithmetic parts of the data-analysis system (i.e., parts of PANG and GUTS or parts of the arithmetic subroutines of KICK). However, such programming systems most conveniently deal with one-word units rather than with units of a few binary digits. They do not deal efficiently with sequences of logical operations. Considering the great amount of data to be processed by a data-reduction system of this type, efficient and careful programming seems justified.

Since the specific KICK program for the IBM 704 is not described, details of its programming and coding, and decks, listings, and operating instructions must be obtained from the authors.[7]

III. THE LOW-ENERGY K^--p EXPERIMENT

One of the most important features of KICK is its ability to analyze any of a large class of different events that can occur in a given bubble chamber run. Since KICK was originally prepared to treat those events which occurred in the low-energy K^- run (momentum in the range 0 to 400 Mev/c) in the 15-inch hydrogen bubble chamber, the approximately 78 types of event that can arise in this experiment are used as a basis for discussion. These types of event are given in Table II. Each event is characterized by a two-digit event-type number which is punched by the measuring instrument into the deck of measurements pertaining to the event. This event-type number is carried through the PANG analysis and is output to KICK, which uses it to select the appropriate analysis sequence. It should be noted in Table II that some event types require little or no processing in KICK. They are assigned for completeness and are passed through KICK in order to appear for examination in the output. Other types of events--some of the scatterings, for example--are included to allow treatment of possible processes that primary or secondary particles from various major events might undergo.

Table II

Low-energy K^--p Event Types		
Event type	Process	Comments
00	Single track	Special designation for a single track to be passed through system to KICK output tape, omitting PANG energy-loss calculation.
01	e^+	Single tracks. Passed through KICK to output tape.
02	μ^+	
03	π^+	
04	K^+	
05	p^+	
06	Σ^+	
07	Σ^-	
08	Ξ^-	
09	K^- (KSF)	Incident-beam track showing no interaction at end. Both hypotheses--stopping in chamber (KS) and leaving or disappearing in flight (KF)--are treated.
10	$n + p \rightarrow n + p$	Scatterings of various particles on chamber protons.
11	$\Lambda + p \rightarrow \Lambda + p$	
12	$\overline{K}^0 + p \rightarrow \overline{K}^0 + p$	
13	$\pi^- + p \rightarrow \pi^- + p$	
14	$K^- + p \rightarrow K^- + p$	
15	$p + p \rightarrow p + p$	
16	$\Sigma^+ + p \rightarrow \Sigma^+ + p$	
17	$\Sigma^- + p \rightarrow \Sigma^- + p$	
18	$\Xi^- + p \rightarrow \Xi^- + p$	

Table II (continued)

Event type	Process	Comments
19	$\pi^+ + p \rightarrow \pi^+ + p$	
20	$K^- + p \rightarrow \Sigma^- + \pi^+$ $\Sigma^- \rightarrow n + \pi^-$	Σ-meson production and decay by K^- in flight (KF)
21	$K^- + p \rightarrow \Sigma^+ + \pi^-$ $\Sigma^+ \rightarrow n + \pi^+$	
22	$K^- + p \rightarrow \Sigma^+ + \pi^-$ $\Sigma^+ \rightarrow p + \pi^0$	
23	$K^- + p \rightarrow \Sigma^+ + \pi^-$ $\Sigma^+ \rightarrow \left\{ \begin{matrix} n + \pi^+ \\ p + \pi^0 \end{matrix} \right\}$	K^- in flight (KF). Ambiguous between types 21 and 22 in event the decay π^+ or p cannot be unambiguously identified.
24	$K^- + p \rightarrow \Sigma^- + \pi^+$ $\Sigma^- + p \rightarrow \Lambda + n$ $\Lambda \rightarrow p + \pi^-$	K^- in flight (KF), produces Σ^- which stops and is captured in hydrogen, yielding a visible Λ.
25	$K^- + p \rightarrow \Sigma^- + \pi^+$ Σ^- stops	Same as 24 but Λ decays via invisible $n + \pi^0$ mode.
26	$K^- + p \rightarrow \left\{ \begin{matrix} \Sigma^- + \pi^+ \\ \Sigma^+ + \pi^- \\ \bar{K}^0 + n \end{matrix} \right\}$ $\left\{ \begin{matrix} \Sigma^- \rightarrow \pi^- + n \\ \Sigma^+ \rightarrow \pi^+ + n \\ \bar{K}^0 \rightarrow \pi^- + \pi^+ \end{matrix} \right\}$	K^- in flight (KF) produces zero-length Σ or $\bar{K}^0$. Ambiguous between types 20, 21, and 29.
27	$K^- + p \rightarrow \left\{ \begin{matrix} \Sigma^+ + \pi^- \\ \Lambda + \pi^0 \end{matrix} \right\}$ $\left\{ \begin{matrix} \Sigma^+ \rightarrow p + \pi^0 \\ \Lambda \rightarrow p + \pi^- \end{matrix} \right\}$	K^- in flight (KF) produces zero-length Σ^+ or Λ. Ambiguous between types 22 and 38.
29	$K^- + p \rightarrow \bar{K} + n$ $\bar{K}^0 \rightarrow \pi^- + \pi^+$	K^- in flight (KF).

Table II (continued)

Event type	Process	Comments
120	See 20	Same track configuration as associated event above. Processed under hypothesis that K^- interacted at rest (KS). These 100-series types do not occur as possible input events, but are assigned internally by KICK during test of stopping hypothesis.
121	See 21	
122	See 22	
125	See 25	
30	See 20	Ambiguous between 20 and 120, 21 and 121, 22 and 122 respectively. Stopping hypothesis tested first. Only in event of unsatisfactory fit is flight hypothesis tested.
31	See 21	
32	See 22	
33	See 23	Ambiguous between 31 and 32.
34	See 24	Same processing as 24, but tries KS
35	See 25	Ambiguous between 25 and 125. See comment on 30, 31, 32.
36	See 26	Ambiguous between 30, 31, and 29.
37	See 27	Ambiguous between 32 and 38.
38	$K^- + p \rightarrow \Lambda + \pi^0$ $\Lambda \rightarrow p + \pi^-$	K^- interacting in flight and at rest both treated.
40		Ambiguous in same fashion as corresponding 30 series. Both stopping (KS) and flight (KF) hypothesis tested.
41		
42		
43		
44		
45		

Table II (continued)

Event type	Process	Comments
46		
47		
49	$K^- + p \rightarrow \Lambda + \pi^- + \pi^+$ $\Lambda \rightarrow p + \pi^-$ or $K^- + p \rightarrow \Sigma^0 + \pi^- + \pi^+$ $\Sigma^0 \rightarrow \Lambda + \gamma$ $\Lambda \rightarrow p + \pi^-$	Both hypotheses tested on both the K^- stopping and K^- in-flight hypotheses.
50	$K^- + p \rightarrow \Sigma^- + \pi^+$	Simple production vertex, K in flight (KF). 50 can be used together with 17 and 67 for Σ^- scatterings.
51	$K^- + p \rightarrow \Sigma^+ + \pi^-$	
52	$K^- + p \rightarrow \Lambda + \pi^0$ $\Lambda \rightarrow \begin{cases} p + \pi^- \\ p + \mu^- + \bar{\nu} \\ p + e^- + \bar{\nu} \end{cases}$	Test of possible leptonic decay of Λ.
53	$\gamma \rightarrow e^+ + e^-$	
54	See 29 and 38	Ambiguous between 29 and 38.
55	$K^- + p \rightarrow \Lambda + \pi^0$ or: $\Sigma^- + p \rightarrow \Lambda + n$ followed by $\Lambda \rightarrow e^+ + e^- + \gamma + n$ (Dalitz pair)	Not processed. Passed through KICK to output tape.
56	$\Sigma^- + p \rightarrow \Sigma^0 + n$ $\Sigma^0 \rightarrow \Lambda + \gamma$ $\gamma \rightarrow e^+ + e^-$	
57	$\Sigma^- + p \rightarrow \Sigma^0 + n$ $\Sigma^0 \rightarrow \Lambda + e^+ + e^-$ (Dalitz pair)	
58	$K^- + p \rightarrow \Lambda + \pi^0$	Simple production vertex, K in flight (KF).
59	$K^- + p \rightarrow \bar{K}^0 + n$	

Table II (continued)

Event type	Process	Comments
60	$\Lambda \rightarrow p + \pi^-$ Λ not from Σ^-	Decay vertices.
61	$\Lambda \rightarrow p + \pi^-$ Λ from Σ^-	
62	$\bar{K}^0 \rightarrow \pi^- + \pi^+$	
63	$\pi^- \rightarrow \mu^- + \bar{\nu}$	
64	$K^- \rightarrow \mu^- + \bar{\nu}$	$K_{\mu 2}$
65	$\Sigma^+ \rightarrow n + \pi^0$	
66	$\Sigma^+ \rightarrow n + \pi^+$	
67	$\Sigma^- \rightarrow n + \pi^-$	
68	$\pi^+ \rightarrow \mu^+ + \nu$	
69	$K^+ \rightarrow \mu^+ + \nu$	$K_{\mu 2}$
70	$K^- \rightarrow \mu^- + \bar{\nu} + \pi^0$	$K_{\mu 3}$
71	$K^- \rightarrow e^- + \bar{\nu} + \pi^0$	K_{e3}
72	$K^- \rightarrow \pi^- + \pi^- + \pi^+$	τ
73	$K^- \rightarrow \pi^- + \pi^0 + \pi^0$	τ'
74	K^0_2 decays	K^0_2
80	$K^- + p \rightarrow \Sigma^- + \pi^+ + \pi^0$ $\Sigma^- \rightarrow \pi^- + n$	
81	$K^- + p \rightarrow \Sigma^+ + \pi^- + \pi^0$ $\Sigma^+ \rightarrow \pi^+ + n$	
82	$K^- + p \rightarrow \Sigma^+ + \pi^- + \pi^0$ $\Sigma^+ \rightarrow p + \pi^0$	
83	$\bar{K}^0 + p \rightarrow \Sigma^+ + \pi^0$	
84	$\bar{K}^0 + p \rightarrow \Lambda + \pi^0$ or: $\bar{K}^0 + p \rightarrow \Sigma^0 + \pi^+$ $\Sigma^0 \rightarrow \Lambda + \gamma$	

Table II. (continued)

Event type		Comments
98 — 99		Temporary numbers which route the event to special temporarily inserted event-type control subroutines

IV. GENERAL ORGANIZATION OF KICK

During the KICK phase of the data-processing system the computer memory can be regarded as being divided into four parts:

1. The storage banks
2. The parameters
3. The processing routines
4. The event-type control subroutines.

One storage bank, called Main Bank (MB - see Table(I) holds information and results pertaining to the event as a whole. It should be recalled that in ambiguous events certain tracks are given several interpretations, each one of which results in a track output record from PANG. For this reason, 14 track banks (TB) of 55 words each are provided, so that up to 14 of these track interpretations can be input. The ith track bank is referred to as TB_i, and the words in each track bank are numbered 0, 2, 3, ... 54. The master record of 10 words output from PANG is inserted into words 2 to 11 of MB. Each 38-word track record from PANG is inserted into words 17 to 54 of successive TBs. These portions of MB and the TBs are never altered during the operation of KICK, so that all the PANG information is always available to KICK and is also passed along to the output of KICK. The remaining words in the storage banks are used by KICK for the holding of intermediate and final results of the KICK fitting analysis. Results pertaining to the event as a whole are inserted into MB, those to a particular track into the appropriate TB. The contents of the MB and a TB are listed in Table I, which also serves the purpose of defining the quantities and the notation used in KICK. The words containing information originating in PANG are indicated by an asterisk (*). TB 15 is reserved for a possible missing neutral track in the event. Such a track is not seen, measured, or processed by PANG; it is internally generated in KICK. Since no PANG data are present, such a TB needs to be only 19 words along.

A summary of the logical flow in KICK is given in Fig. 2. The analysis of a complex event can be regarded as a sequential process made up of unique operations--for example, selection of appropriate quantities from the PANG data to begin the analysis, fitting a vertex in the least-squares sense, connecting such a fitted vertex to a second vertex, fitting that second vertex, outputting intermediate or final results, etc. The basic and most important organizational feature of KICK is to provide a single general processing routine to carry out each of these unique functions. The storage banks contain the current information on an event appropriate to a given stage in this sequential analysis. A processing routine that is to carry out some particular function uses this storage-bank information as input, carries out its process, and restores its results to the storage banks. Accordingly, the storage banks contain an instantaneous picture of an event at a given stage of the analysis. The processing routines can be regarded as representing operators which work on the storage banks acting as operands. Intermediate results can be output at any stage by simply outputting MB and the appropriate TBs. This simple dump of these banks, in fact, is what constitutes KICK output.

Each processing routine is coded in a general fashion as a closed subroutine with appropriate entry parameters so that it can carry out its function on the proper data irrespective of which event type is being processed. A sufficiently large set of these processing routines is provided so that the proper sequence of processing steps can be constructed for the analysis of any one of a large class of bubble chamber events. The processing routines are discussed in Section V.

Each type of event to be processed by KICK has an associated event-type control subroutine. Even though each different event may demand a different sequence of processing steps for its proper analysis, these routines

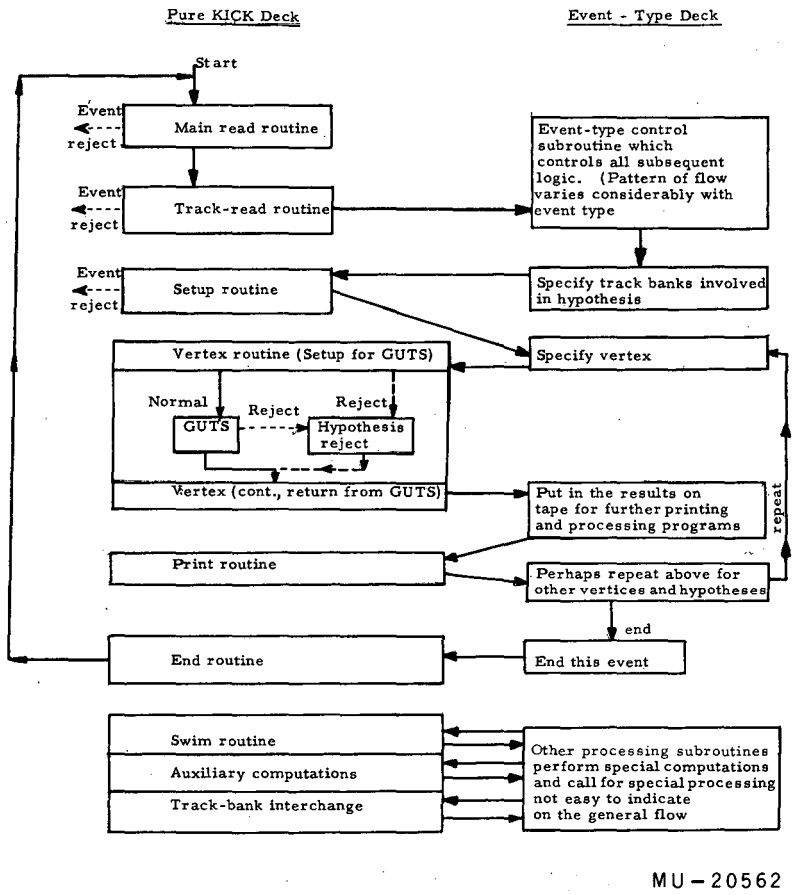

Fig. 2. Overall flow.

are in general quite short, so that a large number can be accommodated in the computer simultaneously. For example, the event-type subroutines necessary for the treatment of approximately fifty of the low-energy K^- events illustrated in Table II can be so accommodated. Such an event-type subroutine consists mainly of a simple list of steps each one of which calls into play one of the aforementioned processing routines. Any programming pertaining to processing steps peculiar to only one event type, any tests for the accepting of a given hypothesis for the event, etc. are programmed into the associated event-type control subroutine. This method of organization makes it possible with only a few words of program to subject each event type to a very complex analysis process. Further it enables KICK to be a general program. A different experiment involving a different set of event types can be analyzed by simply writing a new set of simple event-type control subroutines to replace the old set. Although KICK was originally provided with a set of event-type subroutines for the low-energy K^- run, several new sets for other experiments have been prepared for the high-energy K^--p run (1.15 Bev/c), the low-energy K^- in a deuterium chamber run, and the $\bar{p}$-p run. Event-type control subroutines are further discussed and representative examples given in Section VI.

A number of decisions made by KICK are controlled by the values of a set of KICK parameters. This parameter bank contains such information as the masses of various particles occurring in the experiment, identifying marks, acceptance thresholds for the chi-squared (χ^2) quantities that characterize the least-squares fits, etc. The list of parameters pertinent to the low-energy K^--p version of KICK is given in Table III, which--like Table I-- further serves to define the quantities and the notation used in KICK.

A basic set of parameters is contained within the KICK program itself. Whenever a set of event-type control subroutines in KICK is replaced by an alternate set pertinent to a different experiment, certain parameters also must be replaced. In addition, means are provided for easy temporary alteration of one or more of the parameters, since it may be desirable to make different computer runs within the same experiment using different test constants, different thresholds of acceptability for a hypothesis, etc. Any one or more of these may be changed in two ways. When the program is placed on the machine to begin a run it can be immediately followed by a set of cards giving one or more parameters which replace the appropriate ones in the basic set in effect for that run. Alternatively, parameters to be altered can be placed on special cards and inserted in the deck of cards coming from the measuring instrument. They are then included on the input tape to PANG, which places them on the binary output tape as a record in a special form inserted between the normal PANG event output. KICK can detect such a record on its input tape and alter the appropriate parameters in its parameter bank, which then are in effect during the processing of all subsequent events of that run. At the beginning of each computer run of KICK, or whenever a parameter change passed along by PANG occurs, all KICK parameters are output to the KICK output tape as a special record interleaved between the usual KICK event output in order to form a permanent record and in order to indicate the set of parameters that pertains to the subsequent KICK-analyzed events.

Table III

KICK Parameters
K⁻-p experiment

(MRM = machine representation mode; FP = floating point, I = integer, BCD = binary coded decimal)

Word	Contents	MRM	Unit	Definition, comments
00	M_Λ	FP	Mev	Lambda mass — possible missing particles, for Track Bank 15
01	M_n	FP	Mev	Neutron mass
02	$M_{\pi 0}$	FP	Mev	Neutral pi mass
03	$M_\gamma = 0$	FP	Mev	For gamma, neutrino, or none
04	XC	I	-	Excess conversion constant. Used if the output PANG tape has BCD coding in an excess number system
05	M_P	FP	Mev	Target mass (proton or deuteron)
06	N_{L2}	I	-	Constant, used for L2 test.
07	δp_{beam}	FP	$\frac{Mev}{c}$	Error in beam momentum (at center of chamber)
08	$\lvert p_{beam} \rvert$	FP	Mev/c	Magnitude of beam momentum (at center of chamber)
09	W_{max} $(= W_\infty)$	FP	cm	Wall parameter for nonzero-length tracks, so that GUTS will not limit range of such tracks.

Table III (continued)

Word	Contents	MRM	Unit	Definition, comments
10	W_0	FP	cm	Wall parameter for zero-length tracks; GUTS applies wall feature, i.e., a fit involving a zero-length track has momentum constrained to a value such that its length could not be $> W_0$, which is chosen as the limit of track visibility.
11	PRM	I	-	Parameter record mark. This parameter is output as the first word, for identifying purposes, each time parameters are output.
12	N_{EI}	I	-	Number of event types treated by KICK
13	χ_{09}	FP	-	Test quantity used in Event Type 09
14	χ^2_{SC4}	FP	-	χ^2 thresholds for fitting scattering vertices for 4, 3, 2, 1, 0 constraint cases.
15	χ^2_{SC3}	FP	-	
16	χ^2_{SC2}	FP	-	
17	χ^2_{SC1}	FP	-	
18	χ^2_{SC0}	FP	-	
19	χ^2_{M4}	FP	-	χ^2 thresholds for fitting main interaction vertices for 4, 3, 2, 1, 0 constraint cases
20	χ^2_{M3}	FP	-	
21	χ^2_{M2}	FP	-	
22	χ^2_{M1}	FP	-	
23	χ^2_{M0}	FP	-	

Table III (continued)

Word	Contents	MRM	Unit	Definition, comments
24	$\chi^2_{II\ 20-22}$	FP	-	χ^2 threshold for Vertex II fit in types 20 - 22
25	χ^2_{D4}	FP	-	χ^2 thresholds for fitting decay vertices for 4, 3, 2, 1, 0 constraint cases
26	χ^2_{D3}	FP	-	
27	χ^2_{D2}	FP	-	
28	χ^2_{D1}	FP	-	
29	χ^2_{D0}	FP	-	
30	$\chi^2_{B\Sigma^-}$	FP	-	χ^2 thresholds for accepting stopping K^- hypothesis (without trying flight hypothesis) for Σ^-, Σ^+, Σ_ρ (stopping Σ) events (biased sorting)
31	$\chi^2_{B\Sigma^+}$	FP	-	
32	$\chi^2_{B\Sigma_\rho}$	FP	-	
33	SA(S)	I	-	Ambiguity sign for scattering events
34	SA(D)	I	-	Ambiguity sign for decay events
35	R_{Σ^-}	FP	cm	Range of - or + sigma hyperons from K^- interaction at rest
36	R_{Σ^+}	FP	cm	
37	P_{Σ^+}	FP	Mev/c	Momentum of - or + sigma hyperons from interaction at rest
38	P_{Σ^+}	FP	Mev/c	
39	$\delta P_{\Sigma}/P_{\Sigma}$	FP	-	Fractional error in above two words
40	$\chi_{L\Sigma TH}$	FP	-	Test quantity to determine if length of Σ track in types 120, 121, 122 is sufficiently close to predicted length to have had event occur with K^- at rest

Table III (continued)

Word	Contents	MRM	Unit	Definition, comments
41	ϕ_{PG}	FP	rad	Quantity used in 120, 121, 122 to test if Σ (possibly occurring with K^- in flight) is directed too far backward with respect to incident K^-
42	χ^2_{PG1}	FP	-	χ^2 quantities used as test thresholds at various stages in 120, 121, 122 types of event
43	χ^2_{PG2}	FP	-	
44	χ^2_{PG3}	FP	-	
45	χ^2_{PGII}	FP	-	
46	χ^2_{30}	FP	-	χ^2 thresholds for accepting interaction with K^- at rest (but continuing on to in flight hypothesis) for types 30, 31, 32
47	χ^2_{31}	FP	-	
48	χ^2_{32}	FP	-	
49	k_∞	FP	$(\frac{Mev}{d})^{-1}$	Special values of projected curvature (and its variance) can be used to force a track through special routing
50	$(\delta k_\infty)^2$	FP	$(\frac{Mev}{c})^{-2}$	
51	χ^2_{35}	FP	-	As in words 46, 47, 48, but for type 35
52	P_{Λ^0}	FP	Mev/c	Momentum of Λ_0 from $K^- + p \rightarrow \Lambda + \pi^0$ (K^- at rest)
53	χ^2_{29-4}	FP	-	χ^2 thresholds for accepting main vertex of event type 29 in 4, 3, 2, 1, 0 constraint cases.
54	χ^2_{29-3}	FP	-	
55	χ^2_{29-2}	FP	-	
56	χ^2_{29-1}	FP	-	
57	χ^2_{29-0}	FP	-	

Table III (continued)

Word	Contents	MRM	Unit	Definition, comments
58	χ^2_{29II}	FP	-	χ^2 threshold for event type 29, vertex II
59	χ^2_{125}	FP	-	χ^2 threshold for event type 125
60	$(\Delta P/P)_{L2}$	FP	-	Threshold on $\Delta P/P$ which if exceeded will cause a track to be regarded as though the curvature was not measured at all; just like a 2-point track.
61	α	FP	-	As defined by range-momentum relation $p = p_0 R^{\alpha}$
62	ID No.	I	-	KICK identification number
63	P. ID No.	I	-	Parameter-set identification number
64	Ex. No.	I	-	Experiment identification number
65	$(\Delta k/k)^2_{L2}$	FP	-	Threshold on $(\Delta k/k)^2$ used in same fashion as $\Delta p/p$. See comment on word 60
66				Not used
67	M_K	FP	Mev	Mass of beam particle (K^- meson)
68[a]	SA(I)	I	-	Ambiguity sign for event type 90, vertex I

Table III (continued)

Word	Contents	MRM	Unit	Definition, comments
69[a]	χ^2_{90-4}	FP	-	χ^2 threshold for accepting K^- stopping hypothesis in event type 90 (Λ hypothesis) in 4, 3, 2, 1, constraint cases.
70[a]	χ^2_{90-3}	FP	-	
71[a]	χ^2_{90-2}	FP	-	
72[a]	χ^2_{90-1}	FP	-	
73[a]	SA(2)	I	-	Ambiguity signs for certain Oc fits in event type 90
74[a]	SA(3)	I	-	
75[a]	$\chi^2_{90'-2}$	FP	-	χ^2 thresholds for accepting K^- stopping hypothesis in event type 90 ($\Sigma^0 \rightarrow \Lambda + \gamma$ hypothesis) in 2, 1, 0 constraint cases
76[a]	$\chi^2_{90'-1}$	FP	-	
77[a]	$\chi^2_{90'-0}$	FP	-	
78				Not used
79				Not used
80	Search No.	BCD	-	Serial number of event on which to begin processing. The previous events on input tape are bypassed.
81	$\left(\frac{R-L}{\Delta R}\right)_{th}$	FP	-	Threshold for $(R-L)/\Delta R$ which, if more negative than this threshold, indicates inconsistent track.
82	$(\Delta\phi)^2_{\infty}$	FP	radians^2	Large quantity to which errors in angles of Σ in events 120, 121, 122 are set in order to bypass all requirements on the Σ angles
83[a]	L_Z	FP	cm	Length below which a track is considered zero length.

Table III (continued)

Word	Conents	MRM	Unit	Definition, comments
84[a]	$(Q/\Delta Q)_{th}$	FP	-	Number of standard deviations that Q value of Σ hyperfragment must satisfy to justify hypothesis

[a]Since the parameter bank is of ample size, parameters pertaining to several experiments are often inserted simultaneously in the basic set. The indicated parameters pertain to the low-energy K^- on deuterium run.

V. THE KICK PROCESSING ROUTINES

The action of these routines is most easily understood by means of their logical flow diagrams. The text need only explain notation and abbreviations and amplify the logic.

A. KICK Main Read Routine

This routine acts as the main master control program of KICK. Its logical action is given in the simplified flow diagram, Fig. 3. Control is always returned to this routine at the end of processing a given event (via the "from elsewhere" lines). Its functions are to:

- Restore the storage banks such as Main Bank (MB), track banks (TB), temporary bank, and possibly pickup banks (PUB) to an initial standard condition preparatory to processing the next event. (The pickup banks and their function are described below).
- Initiate reading of the master information from the input tape 3 (PANG output tape).
- Check for PANG omissions, parameter changes passed on by PANG, and certain types of data error.
- Provide convenient console indications and operations to allow an operator control over the program.
- Output the KICK parameters to the KICK output tape (tape 4) initially and each time parameters passed along by PANG are encountered.

The steps may be more easily visualized upon reference Fig. 3.

1. The words ZKICK1, ZKICK2 etc on the figure identify symbolic locations defined in the program to act as marker points.

2. The parameter-identifying mark is a characteristic word which becomes the first word of a KICK parameter-bank output record and permits identification of that record by subsequent programs in the data-processing system.

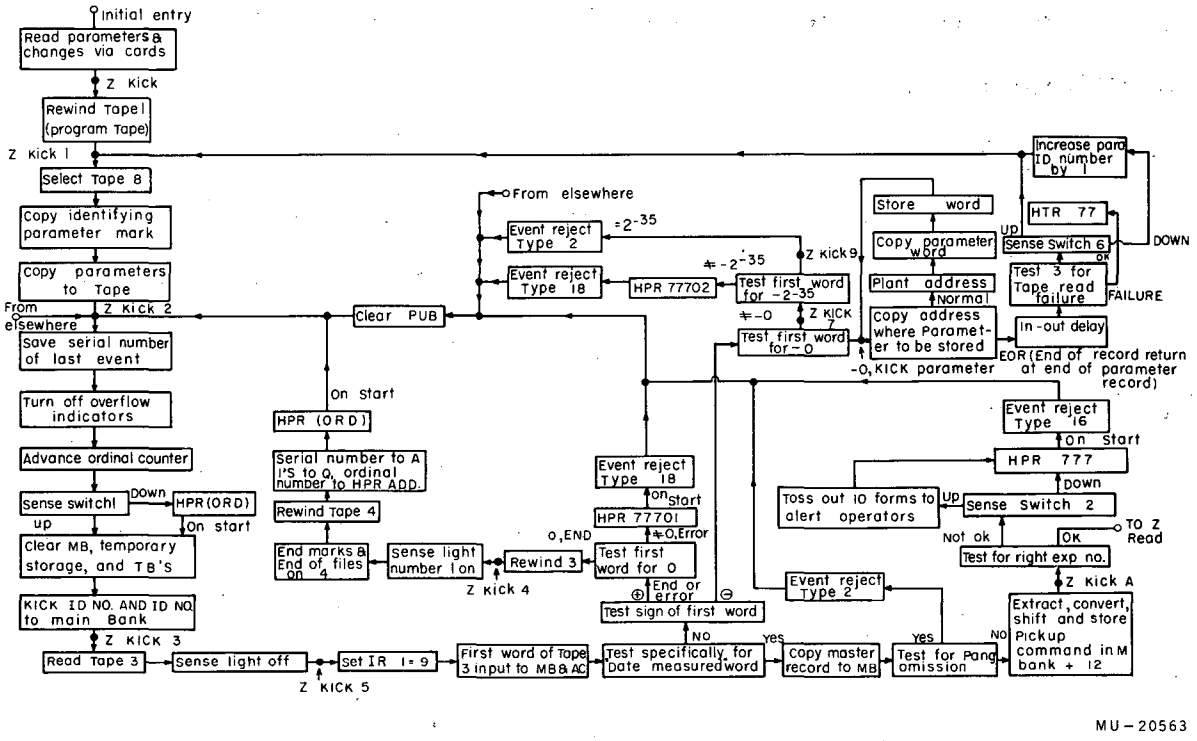

Fig. 3. Logical flow diagram of main read routine.

3. The IBM 704 provides six sense switches (SSW 1, SSW 2, etc.), which can be manually set. The program can test the setting of these switches and execute either of two branches depending on the setting. Also, there are four sense lights which can be turned on or off by the program to indicate to the operator various stages of the program.

4. KICK counts each event processed in a given run and carries this ordinal count in the address portion of a "halt-proceed" command (HPR). Under control of a sense switch KICK can be forced to execute this HPR, which stops the computer with the command and the ordinal count displayed on the console. Pressing the "start" button causes the computer to execute the next command.

5. When necessary, KICK places a special end mark (+0) and some end-of-file marks (EOF) on its output tape (tape 4) to indicate its end. At this point the computer stops with the serial number of the last event processed showing in the accumulator register (A), indicative 1's in the quotient register (Q), and the ordinal number of the last event in the address of the HPR command in the order storage register.

6. The computer is provided with index registers (labeled 1, 2, 4) which can be set to any number n. Then, by means of the index register, the computer can be caused to count through n items, execute a loop n times, process a list of n successive memory locations, examine a memory location n words removed from some base location, etc.

7. The input records from PANG may be of several sorts. These are uniquely identified by a sequence of tests on the first word input.

a. "Date measured" word (See Table I, word 2) indicates a full PANG data file, i.e., a master event-information record plus track-information records.

b. +0, end of input tape

c. -0, PANG-passed-along parameters

d. -2^{-35}, Event reject, type 2

If none of the above appears the input is wrong or garbled. The program rejects this event (error type 17 or 18) and reads forward, searching for a recognizable code word.

8. KICK tests for certain inconsistencies or errors (or both) in the input data. If found, these lead to "event rejects," in which case certain information is placed on the output tape. This is made clear in the description of rejects given below and in Table IV. The meanings of these different types of rejects are given in Table IV in Section V D. In certain of these rejects the computer stops on a HPR command that shows a characteristic identifying number (e.g. 77701, 777, etc.) in its address digits on the console.

9. At the end of an input (or output) sequence, an input-output delay is executed. This delays any subsequent computation (for about 1/2 millisecond) until the equipment also used for input-output is released, in order to prevent any interference.

10. Redundancy-check characters are formed and written at the end of each tape record. These can be tested to indicate whether or not the record has been properly read, and appropriate action taken if not.

After a master record of an event file has been found and read into MB, control is transferred to the Track-Read Routine to read in the set of track records following.

B. Track-Read Routine

The function of this routine, whose flow diagram is shown in Fig. 4, is to input the PANG track records into the appropriate TB locations, to carry out certain consistency checks on these tracks, and to identify which type of event is in hand, in order to transfer to the appropriate event-type control subroutine.

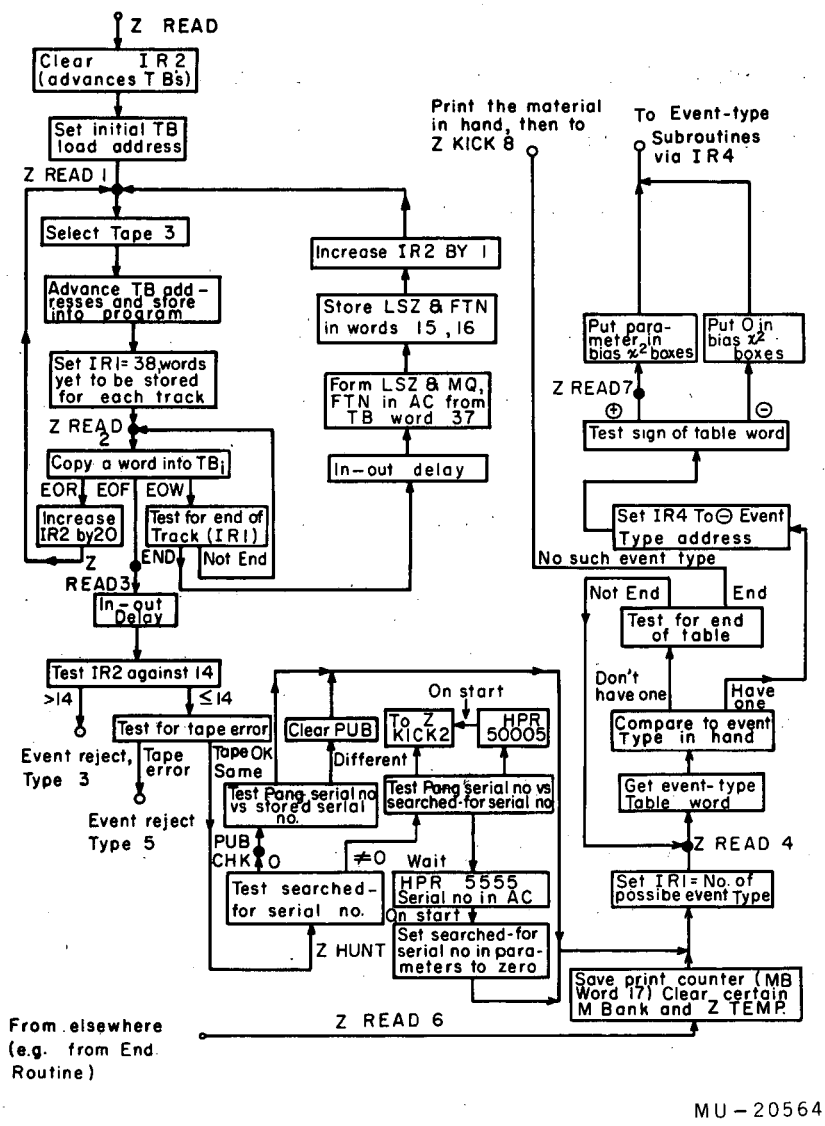

Fig. 4. Logical flow diagram of track-read routine.

The following steps in the routine may be visualized with the aid of Fig. 4.

1. The incoming track records are counted and placed in successive TB's by Index register 2. Note that more TB's may be filled than there are tracks visible in the event, since ambiguous tracks give rise to several track records with alternative mass interpretations. Index register 1 is used to count off the 38 words comprising each track record, as follows: After the reading of each word of a track record one branch of a 3-choice switch tree is taken. These three branches are labeled (in Fig. 4) EOW (end of word), EOF (end of file), and EOR (end of record). In the normal branch, EOW, index register 1 is tested for 38 to determine whether to read the next word of the same track or to begin preparation to read the next track. This is the normal procedure. (If the copy loop reads a record less than 38 words long, indicating a faulty track, the EOR branch causes index register 2 to be artifically increased so as to force failure on a later test; see 2 below.) After all track records of the PANG file on this event has been read the EOF branches causes final escape from the track-reading loop.

2. After all tracks have been input, index register 2 (which has counted them) is tested. If more than 14 records have been read, the capacity of the program has been exceeded and the event is rejected. It is frequently necessary to process a single event in the middle of a tape or to begin processing a tape somewhere in its middle. Accordingly if a serial number to be searched for has been entered in word 80 of the parameter bank (see Table III), the serial number (word 11 of MB) of the event in hand is compared with it. If the current serial number is less, the computer does no processing, but proceeds at once to read the next event in an attempt to find the specified serial number. If the current serial number is greater, events are out of order, since in general

they are prepared in serial-number order; the computer then indicates trouble by executing a HPR command (halt and proceed). If the serial numbers are the same, the computer stops and on being restarted begins to process the event.

4. The serial number (i. e. roll and frame number) of the immediately preceding processed event is always retained and compared with the serial number of the current event. If these are different, indicating that the events were in different frames, the pickup banks (PUB) are cleared. As is seen later, this eliminates any chance that an attempt will be made to connect the two events.

5. After read-in the event-type number of the event in hand is compared to the entries in the "event-type table." This table has one word for each event type to be treated by KICK; the word contains the event-type number and the address in the memory at which the event-type subroutine to process this event is located. Index register 1 is used to scan this table. If a match is found, index register 4 is set to the address of the appropriate event-type subroutine and acts as a "pathfinder register" for the subsequent transfer of control to that event-type subroutine. A second entry to this table-searching procedure is provided ("from elsewhere") for those cases in which it is desired to re-enter the proper event-type subroutine a second time.

If no match is found, the event in hand is not to be processed. The data received from PANG are simply passed through KICK to the output tape.

The sign bit of the event-type table carries a third piece of information. It can be noted in Table II that the only difference between the 30-series and the 40-series events is that in the 40 series both the KS and KF hypotheses are to be tested whereas in the 30 series, if the more likely KS hypothesis has a sufficiently low χ^2 (test χ^2 are in words 30, 31, 32 of Table III), the KF hypothesis is not tried. The 40 series is forced to the

proper analysis if identical processing is used with these test χ^2 set zero. The 30-series and 40-series entry words in the event-type table cause the same routing, but the 40-series words are marked negative so as to cause this replacement by 0.

C. Setup Routine

This routine, whose simplified logical flow diagram is shown in Fig. 5, is one of the processing routines available to the event-type control subroutines. Its function is to extract from each track in an event the appropriate initial information from the PANG portion of the TB (words 17 to 54) and place it in the KICK working portion (words 0 to 16) so that the TB's represent the initial state of the event. To carry out this task, "setup" is provided with two entry words, one of which also acts as the control transfer to the setup routine. This control transfer is made via index register 4 acting as a pathfinder so that the setup routine can find its way back to the appropriate origin. Index register 4 is commonly used as such a pathfinder by processing routines. Information about the event being processed that is transferred to the setup routine via the entry parameter words is:

(a) Whether or not a beam particle is involved in the event (if so it will be Track 1).

(b) The indicating number of a possible missing neutral particle in the event:

0 stands for ν, γ, or none; 1 = π^0; 2 = n; 3 = Λ for low-energy K^- experiment. (This missing neutral becomes Track 15).

(c) A single binary digit for each track bank which indicates whether it is the beginning variables (B = 1) or end variables (E = 0) of the track that are pertinent in the subsequent analysis to which the event may be subjected.

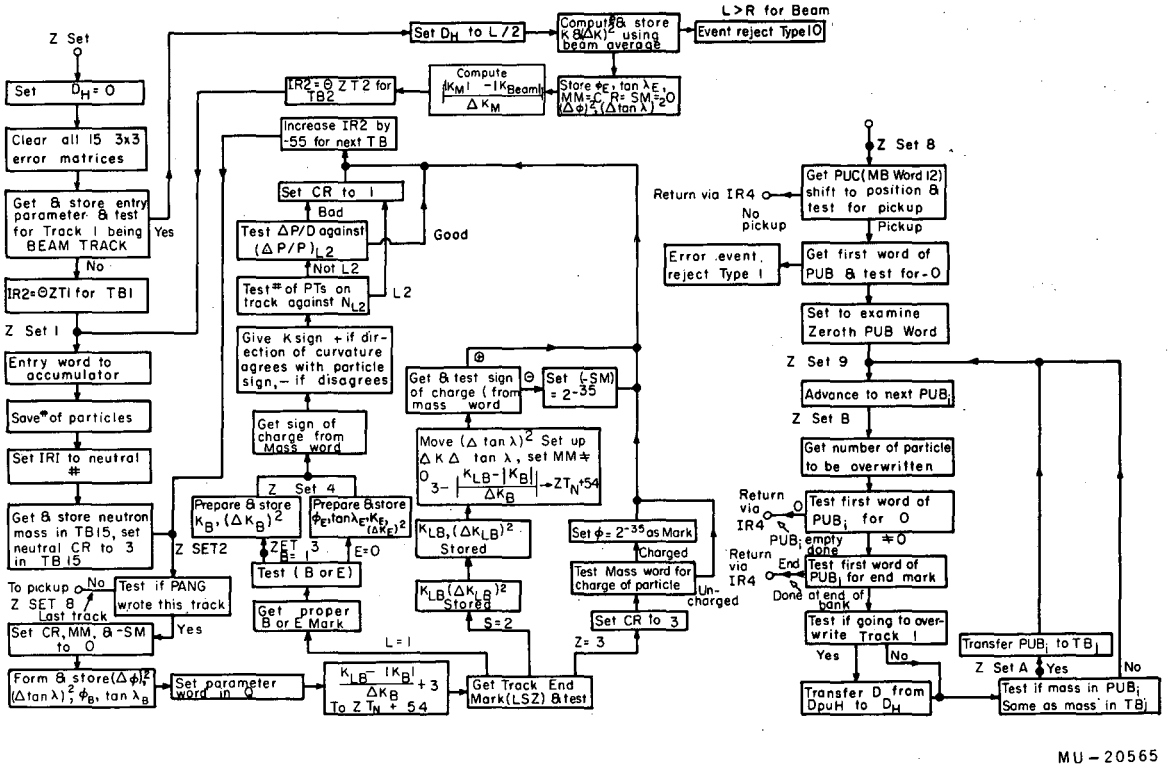

MU-20565

Fig. 5. Logical flow diagram of setup routine.

The following steps in the routine are indicated in Fig. 5.

1. D_H is a quantity used by GUTS to indicate how far back from a vertex the variables of an incident track are to be regarded as being specified. KICK uses this feature only on the vertex entered by a beam particle (see footnote 8, below). Initially D_H is set to 0, illustrating a commonly used way of coding in which a quantity is set to its most frequent value prior to any tests that determine whether this action is correct. Then unless the tests show that it is incorrect, it need not be changed.

2. If Track 1 represents a beam particle it is statistically incomplete to accept its variables as computed by PANG, since more than this is known about it. Rather, the PANG data on the particle and the known beam data are averaged and weighted by their respective errors. The beam "curvature",

$$k_{beam} = \frac{1}{P_{beam} \cos \lambda} = \frac{\sqrt{1 + \tan^2 \lambda}}{P_{beam}} ,$$

expressed at the middle of Track 1, is computable via the range-momentum relations from parameter words 7 and 8 (Table III). Then k_{beam} and its computed uncertainty, δk_{beam}, are combined with the PANG data (k_m and δk_m) by using a statistically weighted average

$$\left(\frac{1}{\delta k}\right)^2 = \left(\frac{1}{\delta k_m}\right)^2 + \left(\frac{1}{\delta k_{beam}}\right)^2 ,$$

$$k = \left[\left(\frac{1}{\delta k_{beam}}\right)^2 k_{beam} + \left(\frac{1}{\delta k_m}\right)^2 k_m\right] (\delta k)^2 .$$

In addition $\left|k_{beam}\right|$ and $\left|k_m\right|$ are compared. The number placed in ZT 1+54 of TB 1 is negative if these numbers fail to agree within 3 standard deviations.

3. The following notation is used: word j of TBi is designated ZTi+j. In this routine, index register 2 is used to index each track bank in turn. If it is set to the negative of the address of the first word of a track bank, it serves as an origin for words in that track bank. This origin is successively advanced through the track banks as they are iteratively processed by the routine.

4. The last two binary digits of the PANG mass word indicate the charge of the particle (00 = neutral, 01 = positive, 11 = negative). Thus KICK has this information available.

5. If a track is zero length (Z) all three variables are missing and the track's constraint-reduction number is therefore set to 3; if it is charged, ϕ is temporarily marked for later use to initiate action that will guarantee that it will not be fitted with a spurious momentum large enough for it to have been seen.

6. Stopping tracks (S) are assigned a curvature, k_{LB}, which is obtained from range and is much more accurately determined than the K_B obtained from measured curvature. If the stopping track is negative (as determined by examining its mass word) and unstable, the -SM is set to signal a later consideration of whether the disappearance of the track might be due to charge exchange.[9] The quantity $3 - \left| \frac{k_{LB} - |k_B|}{\delta k_B} \right|$ is placed in ZTn+54. If this is negative, it indicates that the k_{LB} from range is inconsistent with the k_B from measured curvature, and hence that the hypothesis that this particle stopped is suspect; it may indicate that the particle suffered a charge-exchange interaction or that a particle did stop but had other than the hypothesized mass.

7. Tracks leaving the chamber (L) are assigned k_E or k_B in accordance with the appropriate digit in the parameter entry words. The quantity $\frac{k_{LB} - k_B}{\delta k_B} + 3$ is inserted in ZTn+54. If this quantity is negative it indicates that the track is even more curved than a stopping track of the same measured length and mass (by more than 3 standard deviations). This casts doubt on the interpretation or measurement of the track.

8. At this point the significance of the sign of k is changed. Until now k has been + or - according to whether measured curvature of the track was to right or left, as would be appropriate to + or - particles respectively. At this stage the sign of the particle (obtained from its mass word) is compared with the sign of k. If the signs match k is "correct" and is given a + sign; if the signs disagree k is "wrong" and is given a - sign.

As explained in Paper III, GUTS interprets a minus sign on k as follows: The fitted value of k is constrained to stay positive, although GUTS takes into account the fact that the track, as measured, curved in the wrong direction, thus pushing the final fit in the direction of a rather straight track.

9. If an L ("leaving") track is so short as to have only two points measured in each view, PANG is unable to obtain a curvature measurement. Such an "L2" track has an assigned CR (in ZTi+4) of 1, indicating that one of its variables is missing. In addition, if $\delta p/p$ for the track is large then the PANG-assigned k is essentially worthless in subsequent fits. These quantities are tested against the appropriate parameter (parameter word 60) and if they are found deficient the track is treated as if it were L2 (by setting CR=1).

10. At the setup stage for an L track, since no fit has been made, the errors in the variables are assumed uncorrelated and Gaussian-distributed. (The variables ϕ, tan λ, and k (as opposed to--say--ϕ, λ, and momentum) were chosen precisely so that this assumption could be made. Hence the error matrices are diagonal (MM set to 0, see footnote 10). The stopping track (S) is an exception, since PANG can assign a correlation error term $\delta k\, \delta(\tan \lambda)$, which is appropriately entered into the error matrix by the setup routine.

11. After all tracks have been processed, and just prior to exit from the routine, the pickup portion of the routine is entered. This feature allows two events to be connected together--for example, a π leaving the main event (say type 20, Fig. 1) might scatter on a chamber proton. This is actually fortunate, since an analysis of the scattering serves to establish good fitted variables on the π. These can be used as "measured" variables when the main event is processed, thus propagating the extra information and permitting a better analysis of the main event. If a special event type were defined for each such scattering for each track of all the types of events, the number of types in KICK and associated routines would become unmanageable. However, these secondary events can be processed first and the connecting tracks labeled (at the measuring stage) with future track numbers (FTN, words 16 and 37 of TB, Table I) which they will have in the main event. This information is stored in one of nine pickup banks (PUBi, $1 \leq i < 9$) at the end of the processing, as is explained below. In each pickup bank there are 56 locations; 55 are identical to a TB (Table I), the 56th is the track number for which the data are destined. The nine PUBs are followed by an artifical PUB10 of two words, the first of which contains the easily identifiable number as a mark of the end of the PUBs and the second of which contains a quantity D_{PUH}, defined below.

12. If a main event is to pick up information from previously analyzed events, it is marked with a pickup command (PUC, word 12 of MB, Table I) which brings the pickup routine into action. If the PUBs are found to be empty an error has occurred in the system, and the event is rejected. The pickup routine overwrites the appropriate TBs with the information in the PUB's. Since two of the PUBs may contain two alternative interpretations of the same ambiguous track, the appropriate designation is sorted out by comparing the TB mass with the PUB mass.

13. If an incident-beam track (Track 1) is to be over-written, D_{PUH} is substituted for D_H in order to use the D feature of GUTS (see Paper III) on Track 1.[8] On the analysis of the preceding event the length of the connecting track will have been properly entered as D_{PUH}.

It should be noted that in many cases (e.g., Z or L2 tracks) certain items of the PANG data are missing. In KICK it is expedient to always carry out certain calculations before tests are made on the various marks that select which information is used. To guarantee that these calculations will not result in computer hangups, PANG passes on "innocuous" numbers in these locations which cannot be fitted by real data.

V D - Vertex Routine

The actual fitting of a vertex is carried out by the subroutine GUTS (described in Paper III). It carries out a least-squares fitting procedure minimizing

$$\chi^2 \equiv \sum_{ij} (x_i - x'_i)\, G_{ij}\, (x_j - x'_j)\ ,$$

where x_i = fitted variable, x'_i = measured variable, G_{ij} = reciprocal error matrix. The minimization is subject to four equations of constraint,

$$F_\lambda (x_i) = 0 \quad \text{for} \quad \lambda = 1, 2, 3, 4,$$

which represent the conservation of energy - momentum. The number P of particles entering leaving a vertex can be as large as 7. GUTS is provided with its own storage banks separate from those of KICK. Into these the Vertex routine must load the following quantities:

(a) the masses,

(b) the MM words,[10]

(c) the variables, and

(d) the error matrices of all particles in the event.

When variables are missing one constraint equation can be used to supply each missing variable (up to 4) thereby reducing the constraint class L of the vertex. The constraint classes treated by GUTS are:

4c: Normal case. All three variables present for each particle.

3c: k missing for one particle. All quantities pertaining to this particle must occur last in GUTS banks.

2c: k missing for two particles. These two must be entered last in GUTS banks.

1c: All variables missing for one particle (i.e. Z). This particle is treated last by GUTS.

0c: k missing for one particle (which must occur next to last in GUTS banks), and all three variables missing for another particle (which must occur last). The 0c case is not a "fit", since no constraints are left, and this case is therefore not overdetermined. The measured variables present are accepted as the fitted variables, and GUTS uses the four equations of constraint to calculate the four missing variables and their errors. In addition to the above, GUTS needs to be supplied with P, L, and the mass of the target particle; in the list of particle masses, the inbound particle mass is to be marked by a minus sign.

The KICK Vertex Routine, whose logical flow diagram is shown in Fig. 6, is the routine which (by incorporating GUTS as a subroutine) carries out a vertex fit using KICK track bank information on the particles interacting at that vertex. The Vertex Routine needs two parameter entry words, which supply the information:

1. Whether the GUTS D feature (k specified upstream from vertex) is to be used. An alternate version of KICK always uses this feature on the inbound track at any vertex.[8]
2. Whether a 0c fit is to be permitted at the vertex.
3. Whether the vertex represents an interaction or a decay.
4. The number of particles in the interaction.
5. A list of TB numbers specifying which particles participate. Each entry in this list is marked according to whether the particle is inbound (-) or outbound (+).
6. Whether a normal fit, a fit for angles only, or a missing-mass computation is desired (see paragraph 8 below).

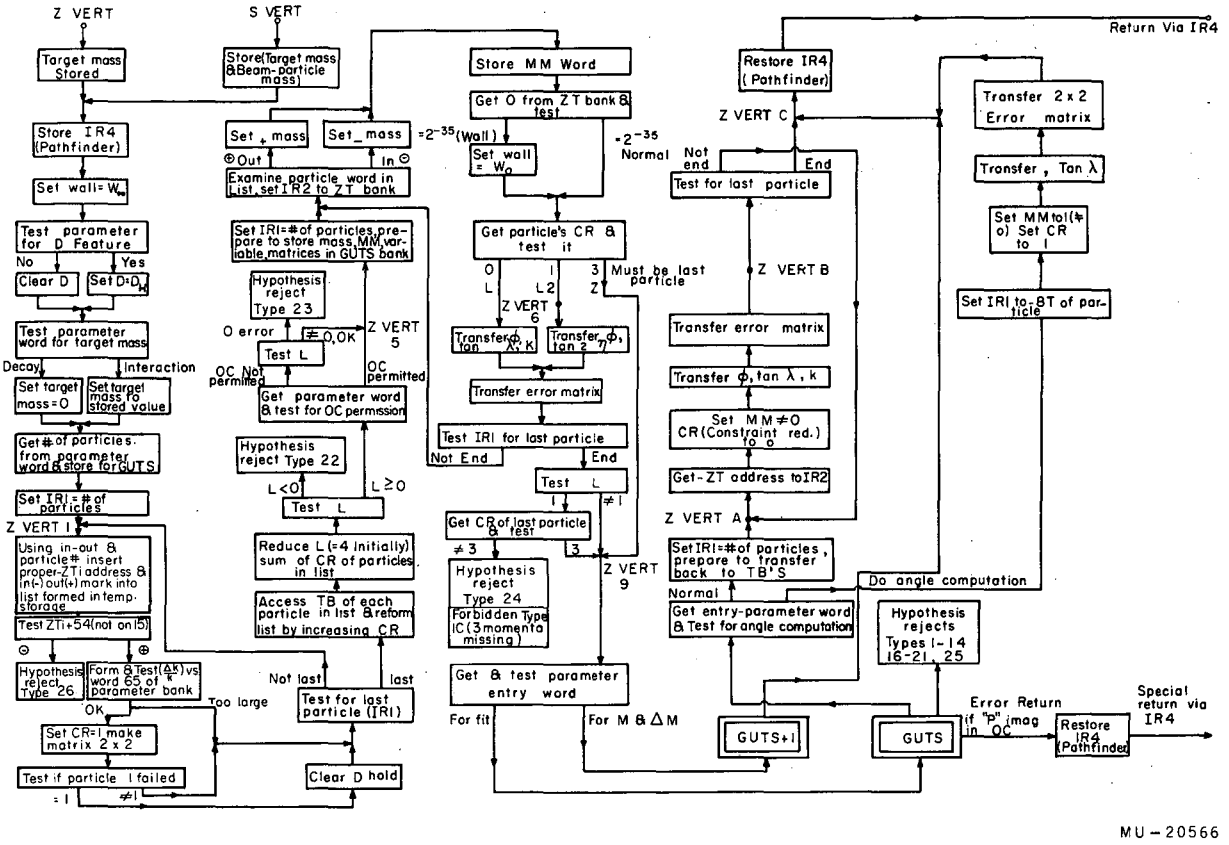

Fig. 6. Logical flow diagram of vertex routine.

Features of the routine shown in Fig. 6 are as follows.

1. Two modes of entry to the routine are provided. In one (ZVERT), the mass of the chamber particle (parameter word 05, Table III) is identified as the target mass. In the other (SVERT), the sum of the masses of the chamber particle and the beam particle (parameter word 67, Table III) is identified as the target mass. If this latter choice is made and no incoming particle is provided, the effect is to have the routine treat the "decay" of a fictitious particle whose mass is the above sum, i.e., treat a case in which the beam particle stopped before interacting with the chamber particle.

2. The routine scans the parameter entry word and forms a list of -ZTi addresses of the TBi occurring at the vertex. This list is marked + or - according to whether the particle is out- or inbound. During this scan two tests are performed on each participating track. The ZTi+54 word is tested. If it is negative it denotes an inconsistent track. If such a negative word is found, the processing of this vertex is halted and exit is made from the routine. It is not the event that is rejected--only the hypothesis currently being tested. If further hypotheses remain to be tested, the processing continues. In addition the ratio $\delta k/k$ is tested in order to determine if k is precise enough to warrant its retention. If not, k is discarded and the constraint reduction number CR is increased by one.

3. The list formed above is re-ordered according to increasing CR so that particles with fewer measured variables come later, thereby satisfying the GUTS calling sequence. The pertinent information is transferred in this GUTS order from the track banks to the GUTS input banks. During the transfer, ϕ for each particle (TB word 0) is examined for 2^{-35} to which it will have been set by the setup routine for any stable charged zero-length particle. If such a mark is found W (Wall MB word 29 Table I) is set to W_0.

This action causes GUTS to impose a further nonanalytic constraint on the fit. The Z particle is not fitted by a momentum sufficiently large that its projected range would be greater than W_0, which is chosen as the smallest track length that can be observed in the chamber.

4. There are two ways in which a 1c case can arise:

(a) Three tracks can have a constraint-reduction number CR = 1 (unmeasured or poorly measured k). GUTS cannot presently handle this case, therefore it must be skipped (hypothesis reject).

(b) One track can be completely missing (CR = 3), with all others having no missing variable. In this case, after the re-ordering just described, the last track on the list has CR =3. This is checked just before entering GUTS.

5. A special entry (GUTS + 1) is provided in case the facilities of GUTS are to be used to compute the mass M (and its error δM)and the momentum unbalance P (and its error δP) unaccounted for at a vertex by an energy-momentum balance on the visible tracks. For this purpose it is necessary that L = 4; if it is not the hypothesis is rejected. The results of this calculation are placed in words 30 and 31 of MB (Table I) and the vertex routine is left.

6. During the normal operation of GUTS for obtaining a fit, it is possible for trouble to arise that prevents the making of a fit. These cases lead to direct rejections by GUTS of the current hypothesis. A list of such cases is given in Table IV. While making a 0c calculation, GUTS may find an imaginary momentum. If so GUTS makes a special exit to the vertex routine which in turn makes a special return to the event-type subroutine in question, which can take the remedial action appropriate to the type of event being treated.

Table IV

REJECTS

Hypothesis rejects - Indicated by setting STM (word 1 of MB) = $10^6 + k$ and $\chi^2 = 100$. (Remainder of event is processed.)

k	Significance (See Paper III for details of rejects arising from GUTS)
1	(GUTS) In 3c fit, computed value of p^2 or E (for particle whose momentum is missing) is negative
2	(GUTS) Too many cutdowns were required in the step size used in the progression toward the fit
3	(GUTS) $H_{\mu\nu}$ (one of the error matrices) is singular
4	(GUTS) $\chi^2 \geq 500$ on initial step of fit
5	(GUTS) Too many iterations used in progression toward the fit
6	(GUTS) Two alternate ways of computing χ^2 for the fit evaluated as a check do not agree to within $< 1\%$
7	(GUTS) Some $y_i \equiv \dfrac{X_i - X_i^{meas}}{(X_i - X_i^{meas})_{rms}}$ is imaginary X_i = any track variable being fitted
8	(GUTS) Sum of squares of constraint functions negative
9	(GUTS) rms deviation of χ^2 from its minimum value is imaginary
10	(GUTS) In 2c fit, computed value of magnitude of projected curvature (for particles whose momenta are missing) is negative
11	(GUTS) Some diagonal element of output error matrix is zero

Table IV (continued)

12	(GUTS) Some particle had singular input error matrix
13	(GUTS) An attempt to divide by zero occurred somewhere in the GUTS calculations
14	Not used
15	(GUTS) In 0c fit, computed momentum of missing track is imaginary
16, 17	(GUTS) The table representing the range-momentum relation in the machine has been exceeded
18	(GUTS) rms error in computed missing mass at a vertex is imaginary
19	Not used
20	(GUTS) Missing-mass computation requested in other than a 4c case (i.e., some variables missing)
21	(GUTS) An input projected curvature was zero
22	Number of constraints greater than 4 or less than 0
23	Number of constraints is 0, when this case is excluded by nature of event type
24	Forbidden type of 1c vertex (three momenta missing)
25	(GUTS) AM (word 32 of MB) requested computation of missing momentum in 0c case using both signs of ambiguity. Both roots negative.
26	Some track had a negative word in word 54 of its TB

Table IV (continued)

Event Rejects - indicated by setting STM (word 1 of MB) = 10^8 + k.
Total event rejected.

k	Significance
1	Event needed to pick up correction data from previous events from pickup banks (PUB) and found none there
2	PANG omitted an event
3	More than 14 track records from PANG in an event, or less than 38 words in a PANG track record
4	Not used
5	Tape-reading error on some event
6	KICK attempted to store future-track information in pickup banks when they were already full
7	Not used
8	Not used
9	On 0c fit in event types 10 through 19, a computed momentum is imaginary
10	Length > range for a beam K^-
11	Like 9, but on vertex II of event types 120, 121, 122
12	Like 9, but on a decay vertex
13	Like 9, but on vertex I of event type 5 2

Table IV (continued)

14	Like 9, but on vertex II of event types 20, 21, 22
15	Missing track in input data from PANG
16	Experiment number on event (MB word 8) fails to agree with experiment number of the run (parameter word 64)
17	Garbled data from PANG, positive first word
18	Garbled data from PANG, negative first word

7. After GUTS has achieved a fit, the fitted variables, complete information on the errors, and their correlations are present in the GUTS output banks. Again, by use of the list of participating particles, the fitted information is returned to those TBi which participated in the vertex fit, thus bringing them up to date.

8. A special entry "for angles only" can be made to the vertex routine by marking the parameter entry word with the number of a specified track bank. In this case, after the fit only the angles ϕ and tan λ (and their errors) for that specified particle are extracted and returned to the appropriate TB. This feature, written for one especially troublesome type of event, is seldom used.

E - Swim Routine

This routine operates on one track bank at a time and transforms the variables and the error matrix therein so that they are appropriate to the other end of the track.[11] This is frequently necessary in the analysis of a multiple-vertex event. Consider, for example, a Type-20 Σ^- production-decay event (Fig. 1). After the fit at vertex II, the variables and their errors in TB4 pertain to the end (E) of track 4. Prior to the entering of a fit at vertex I, the variables and their errors must be transformed to the beginning of the track by the process known as swimming.

The swim routine has one simple entry parameter word, which specifies the track bank to be corrected and--by means of one binary digit--the direction of the swim, down (B $\rightarrow$ E) or up (E $\rightarrow$ B). By means of this parameter, the program can examine the track bank concerned and refer to the other quantities necessary for the process, which are all contained therein. If the track is discovered to be neutral or zero-length, no corrections are needed.

Angles are "swum" according to the following prescription:

for $B \rightarrow E$:

$$\phi_E = \phi_B + (\phi_E^* - \phi_B^*) \frac{k}{k^*} ,$$

$$\tan \lambda_E = \tan \lambda_B + (\tan \lambda_E^* - \tan \lambda_B^*) \frac{k}{k^*} ;$$

for $E \rightarrow B$:

$$\phi_B = \phi_E + (\phi_B^* - \phi_E^*) \frac{k}{k^*} ,$$

$$\tan \lambda_B = \tan \lambda_E + (\tan \lambda_B^* - \tan \lambda_E^*) \frac{k}{k^*} ,$$

where starred quantities are measured values from the PANG portion of the TB, and unprimed quantities are fitted values from the KICK portion of the TB, and k and k* pertain to the beginning of the track. It should be noted that the ratio of the fitted to measured curvatures corrects the azimuth correction if the curvature has been changed by the fitting.

A table expressing the range-momentum relations is available to the program. This is used to adjust the curvature $k = \frac{\sqrt{1+\tan^2\lambda}}{p}$ by computing p, propagating it via the table by a distance D, and recomputing the corrected k. The error matrix is propagated by using the relation

$$\delta x_i' \, \delta x_j' = \sum_{k,\ell=1}^{3} \frac{\partial x_i'}{\partial x_k} \frac{\partial x_j'}{\partial x_\ell} \, \delta x_k \, \delta x_\ell ,$$

where primes indicate corrected variables at the other end of the track. The partial derivatives are known functions of the variables, which are computed again with the aid of the range-momentum table.

F - Auxiliary Computation Routine (ZPCOM)

Although the projected curvature k is the variable used in the analysis, it is frequently necessary in the course of the analysis to examine the associated momentum p and similar associated quantities. This routine provides such a calculation and is entered with a parameter entry word that simply specifies the desired track bank. The results are placed in seven standard memory locations for immediate use. If the track momentum is missing the seven quantities are set to zero. The quantities computed are:

(a) $p = \frac{\sqrt{1 + \tan^2\lambda}}{k}$,

(b) $\delta p = [\,(1+\tan^2\lambda)(\delta k)^2/k^4 + (\tan^2\lambda)(\delta\tan\lambda)^2/k^2(1+\tan^2\lambda) - 2(\tan\lambda)\delta k\ \delta\tan\lambda/k^3]^{1/2}$,

(c) R (associated with p) from the range momentum table,

(d) $\delta R = (R/\alpha)\ (\delta p/p)$, calculated by using the standard approximation $p = \text{const.} \times R^{\alpha}$.

(e) $(R - L)/\delta R$,

(f) T = the time that the particle takes to traverse the track,

(g) δT = the error in T

If the designated particle is neutral the routine sets $R = (R - L)/\delta R = 0$, $\delta R = 1$.

For leaving tracks, L, the quantity $(R - L)/\delta R$ is tested for being negative and larger in magnitude than parameter word 81 (Table III). If it is, the track is longer than its expected range by a significant amount, thereby casting doubt on the significance and interpretation of the track. A special mark is made (which can be tested later) to signal that this has occurred. This test is not carried out on tracks incident to a vertex, since for such tracks there is obviously no connection between the length (back upbeam) and the calculated residual range (downbeam).

If such an "R-L failure" has arisen for a given track the most likely value for its momentum is the value given by its length via the range-momentum relation (assuming, of course, the correct mass interpretation). The special mark could be used in order to impose this momentum via a refitting of the vertex with this track called "S" instead of "L". This refitting could be carried out automatically on every such vertex by a general processing routine; at present, however, this refitting is relegated to the event-type-control subroutines (see discussion of event types 10 to 19, below).

G - Track-Bank-Interchange Routine

This routine is entered with an entry parameter word which specifies two track bank numbers. The entire contents (55 words) of these two track banks are interchanged.

Each fundamental, simple event type (e.g., event types 20, 21, and 22, Table II), since it contains no ambiguous track, fills up only as many track banks as there are numbered tracks in the event. Ambiguous event types (containing tracks to which PANG has given multiple interpretations and hence for which it has produced multiple track records) have track-bank configurations in no way similar to the track-bank configurations of the simple types of event out of which the ambiguous types are made up. It may be desirable to analyze an ambiguous event by exploiting the appropriate event-type subroutines for the simple events making up the ambiguous one. Because of the different TB configurations this is not directly possible. However, by using the track-bank-interchange routine, track banks can be moved around in order to obtain the requisite track-bank configuration prior to entry to a special event-type subroutine for ambiguous events. The treatment of such events is further discussed and illustrated in Section VI below.

H - Print (Output) Routine

At various stages of processing in an event-type subroutine it is desirable to output the current state of an event. This output is in binary form on magnetic tape so that it can either be used for input to subsequent analysis programs or be converted and printed by a simple conversion routine. The print routine is provided with an entry parameter word which specifies

(a) The number of track banks to be output. (The master bank and the missing neutral track (if it has been fitted) are always output.)

(b) Whether a "good" or "poor" print is desired. A "poor" print is characterized by having 10^4 added to the Secondary Track Mark (STM, word 1 of MB, Table I), and is used after a hypothesis has failed to meet a χ^2 fitting criterion. The occurrence of a "good" print following the meeting of such a criterion causes the Good Print Mark (GPM, word 14 of MB, Table I) to be set nonzero, thereby indicating that some hypothesis can be satisfied. In one version of KICK, the good and poor outputs can be routed to two separate tapes.

(c) Whether or not the complete GUTS error matrix pertaining to the last fit is to be output.

The output consists of a file consisting of the records:

(a) An 86-word extended Main Bank record consisting of the 33 words of Main Bank (Table I); the ordinal counter, which counts events processed in this KICK run; and 52 words from the GUTS banks which pertain to the last fit carried out by GUTS prior to this output. These 52 words are[3]

(1) P, the number of particles.

(2) L, the number of constraints.

(3) $I = 3P + L - 4$, the number of free variables.

(4) Eleven counters and markers used by GUTS to record the number of iterations, the number of times the iteration step size was reduced, the type of rejection that occurred, etc.

(5) Nine locations containing the list of eight masses used, and one marker word.

(6) Four locations containing the initial values of the four constraint equations.

(7) Eight locations containing the final values of the four constraint equations and their uncertainties.

(8) Four locations containing the initial values of the four Lagrangian multipliers.

(9) Four locations containing the final values of the four Lagrangian multipliers.

(10) D, the distance from the vertex at which k of track 1 is specified.

(11) $\sum_{\lambda=1}^{4} a_\lambda b_\lambda = \chi^2$.

(12) The error in χ^2.

(13) Six additional quantities computed at various stages of a fit as measures of convergence.

(b) A 62-word record for each track bank. These 62 words are the seven words produced by the auxiliary computation routine (see F above), which is entered by the print routine for each track, plus the 55 words of the Track Bank (Table I). If track 15 has participated in a fit, then it is automatically output. The record then is 26 words instead of 62 words, since the PANG information does not exist.

(c) If a track bank participated in the last GUTS fit, an additional 16-word record follows the appropriate 62-word record, containing momentum and energy information on the track produced during the GUTS fit. These quantities are much more useful for a physical understanding of the event than are the mathematical variables used in the fitting procedure. The 16 quantities are:

$$\left.\begin{array}{l} (1)\ P_x = \left|\dfrac{\cos\phi}{k}\right|, \\ (2)\ P_y = \left|\dfrac{\sin\phi}{k}\right|, \\ (3)\ P_z = \left|\dfrac{\tan\lambda}{k}\right| . \end{array}\right\}$$

the components of momentum in the laboratory system

(4) $P = [\ P_x^{\ 2} + P_y^{\ 2} + P_z^{\ 2}\ ]^{1/2}$.

(5) $W = [\ P^2 + M^2]^{1/2}$.

If there was an inbound particle at the vertex, a center-of-mass coordinate system can be defined so that the following have meaning:

(6) $\cos\ \theta$,

(7) θ (degrees), the laboratory-system angle between this track and the inbound track.

(8) p_L , longitudinal, and

(9) p_T, transverse components of momentum in the center-of-mass system.

(10) $p = [\,p_L^{\ 2} + p_T^{\ 2}]^{1/2}$.

(11) $w = [\,p^2 + M^2]^{1/2}$.

(12) $\cos\ \theta$.

(13) θ (degrees), the center-of-mass angle between this track and the inbound track.

$$\left.\begin{array}{l} (14) \\ (15) \\ (16) \end{array}\right\} \begin{array}{l} x_i - x_i' \\ \hline \langle x_i - x_i' \rangle_{rms} \end{array}$$

Primed quantities indicate measured variables; unprimed, fitted variables.

Items (14), (15), and (16) are the "stretch" functions discussed in Paper III. They are a properly scaled measure of the amount by which each measured variable has been adjusted during a fit. If the track bank did not participate in the last GUTS fits, the print routine writes a record consisting of a single code word (777 777 777 777).

d. If a GUTS print has been specified by the entry parameter word, the complete 3Px3P error matrix[5] $\delta x_i \, \delta x_j$, is output, where x_i denote a particle variable.

e. In the event of a "poor" print on which a GUTS print is also specified, all input information to the GUTS banks is also output in order to be present for examination for possible program malfunctions.

I - Reject Routines

In the course of the processing carried out by KICK, trouble can develop which leads to a reject. Some of these rejects are shown on the logical diagrams above. All rejects are listed in Table IV for reference.

Rejects are divided into two types, event rejects and hypothesis rejects. The former are usually due to a fundamental data error or inconsistency or to an actual computer error. On such a reject a "poor" print is executed with the Secondary Type Mark (word 1 of MB, Table I) set to 10^8+k, where k labels the reject type. The entire event is then abandoned and the pickup banks are cleared. The next event is then read in.

A hypothesis reject does not indicate serious trouble, but merely that one of the hypotheses being tested for the event will not give a satisfactory over-all fit or else is so unlikely that the analysis cannot be done within the mathematical limits of the program. In this event the Secondary Type Mark is set to 10^6+k, where k labels the reject type, and the χ^2 for the hypothesis

is set to 100, which will ensure its ultimate rejection. Control is then returned to the event-type subroutine and processing is continued from that point.

J - End Routine

The end routine is in general entered by an event-type subroutine at the very end of the processing sequence. The entry parameter word need specify only the number of track banks involved in this type of event. The routine whose logical flow diagram is shown in Fig. 7 carries out two important terminal checks on the event. First: If no hypothesis tested in the event-type routine met the criteria on χ^2 (and hence no "good" print was ever made), the end routine scans the pertinent track banks to determine if a negative stopping track is involved. In the chamber it is difficult to distinguish such a track from one which underwent a charge-exchange interaction with a chamber proton and hence is actually a leaving (L) track. To allow for such a possibility such a track is changed to L and the analysis repeated by making entry to the search of the event-type table in the Track Read Routine (already described in Section B). Second: If some hypothesis did meet the criteria on χ^2, the track banks are scanned to determine if any of them has future track numbers (FTN) and hence is destined to be used as "measured" tracks in some yet-to-be-analyzed event. If so, the current information on the track must be stored in a pickup bank (PUB). These are searched for an empty bank; if none is available the event is rejected. It should be noted that the current fit will have produced variables pertinent to one end of a track whereas the variables at the other end will be pertinent in the subsequent event.[13] If the track is not destined to overwrite a track which will be used by the main event with the D feature, (i.e. not destined to overwrite Track 1), the swim routine is used to adjust its variables to the track beginning, which is where it connects into the main event. If the track on which D is to be used (Track 1 of the main event) is to be overwritten only the angles need to be transformed to the end. The curvature need not

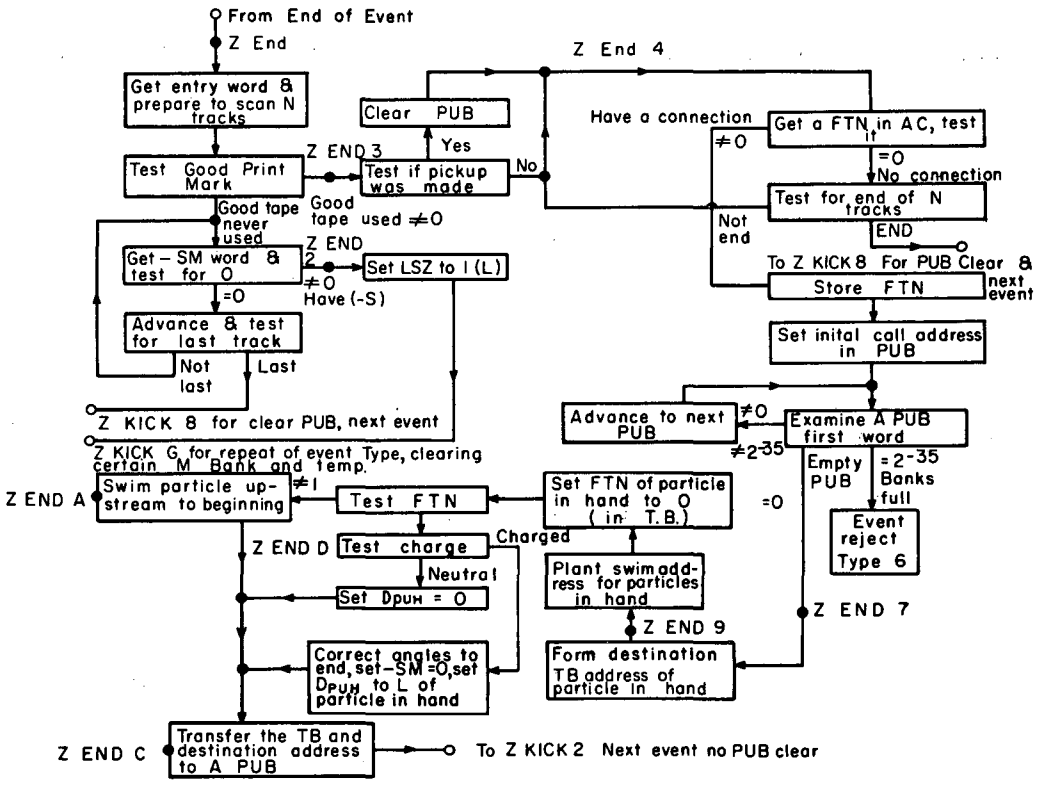

Fig. 7. Logical flow diagram of end routine.

be transformed, since it is handled by storing the length of the track L as D_{PUH}, which will be used with the D feature of GUTS. After the track bank thus transformed has been transferred into the pickup bank, the routine returns to the KICK Main Read Routine (Section A) to begin processing the next event.

VI. THE EVENT-TYPE CONTROL SUBROUTINES

The event-type subroutines treat the widely differing types of events that can arise in a given bubble chamber run. They can in themselves be rather simple, since general processing routines are provided to handle the more complicated and (or) more frequently occurring steps likely to be encountered in properly processing a given event. A second simplifying feature is that two types of events, differing in detail as to the masses or charges of the particles involved, may be topologically the same. If the same processing steps are required for each, the same subroutine suffices, since those quantities in which the two types differ are automatically set into the KICK working banks by the input from PANG.

These points and the general procedure of preparing event-type subroutines are best illustrated by several examples drawn from the event-type subroutines for the low-energy K^--p experiment (Table II). Consider event types 20, 21, and 22 (Figs. 1, 8, and 9, respectively) which deal with the two-vertex sequence of events in which a K^- in flight interacts with a proton to produce a charged Σ hyperon, which subsequently decays. (The logical flow diagrams of the analysis are shown in Fig. 10). These event types may occur alone (i.e. events can be sketched and put through the system as type 20, type 22, etc.) However, an ambiguous event may be called type 30, in which case KICK has to try both the hypothesis tested by type 20 and by type 120. For this reason most of the logic of types 20, 21, 22, 120, 121 and 122 has been written in the form of closed subroutines, called SUB 20, SUB 120, etc., which can be entered from any other Event-Type-Control subroutine. Some event types test multifold ambiguities; thus type 37 invokes both SUB 32 and SUB 38; SUB 32 in turn invokes SUB 22 and SUB 122. Index register 4

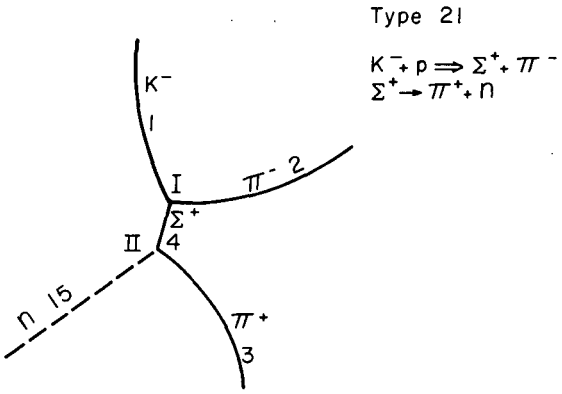

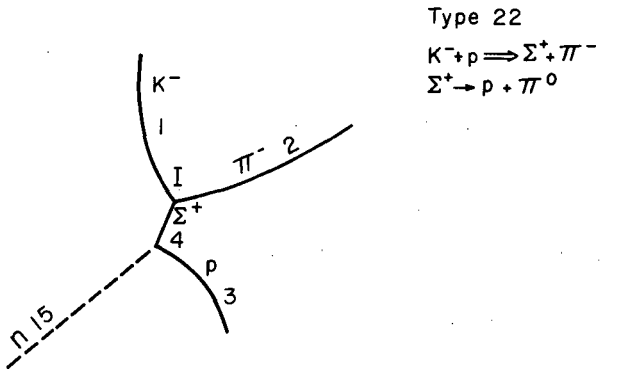

MU-20579

Fig. 8. Event type 21.

Fig. 9. Event type 22.

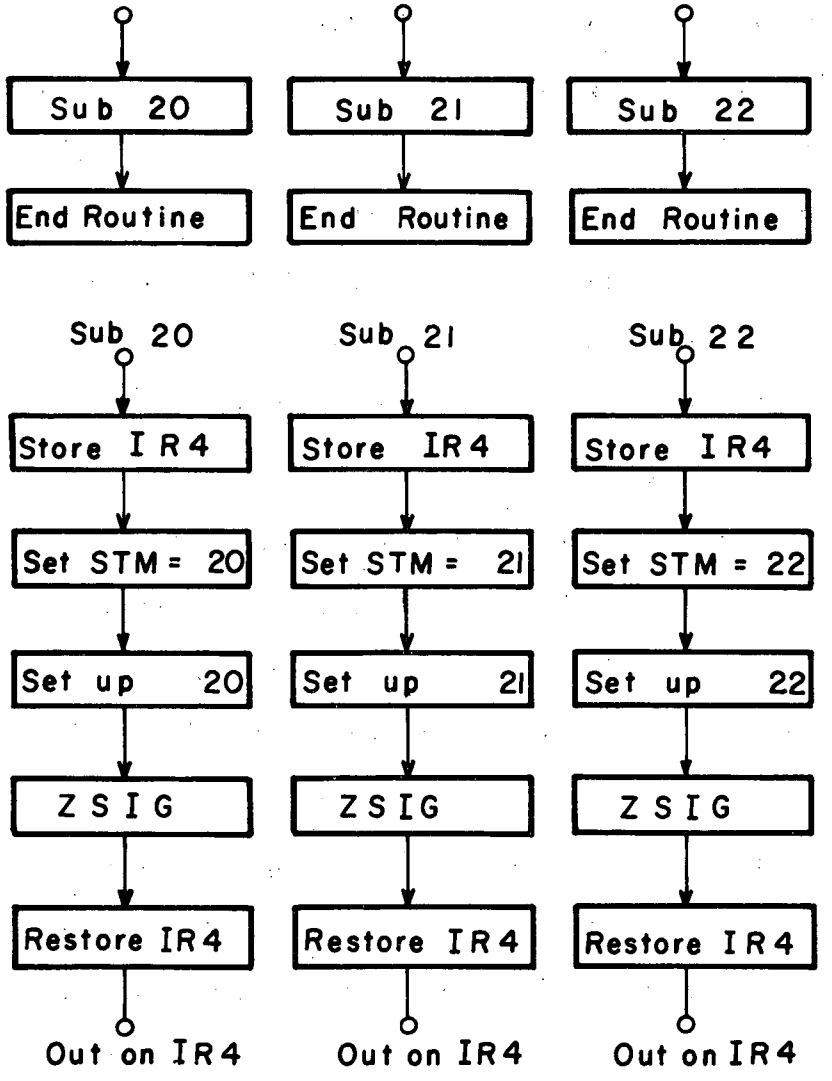

MU-20568

Fig. 10. Logical flow diagrams of event-type subrountines for event types 20, 21, and 22.

always acts as a pathfinder for the subroutine entry, the subroutine stores it on entry and restors it on exit. A special location is reserved for this purpose. When a pure 20, 21, or 22 event is in hand the event-type subroutine consists simply of an entry to SUB 20, SUB 21, or SUB 22 for analysis, followed by an entry to the End Routine. The control subroutines themselves differ only in the setting of the Secondary Type Mark (STM) for identity and marking purposes, and in the Setup Routine entry, since the charges of the particles are not the same in the three cases. The rest of the analysis is common and is carried out by a closed subroutine ZSIG.

The logical flow diagram of this common subroutine is shown in Fig. 11. The two vertices are first fitted in the order I, II, thereby obtaining the best fit to the decay process II, since I for this latter fit merely gives better values for the track 4 variables than were provided by PANG. After each vertex fit the resultant χ^2 is compared with the proper χ^2_{ML}, for $L = 4, 3, 2$, or 1 (parameter words 19-22, Table III), depending on what constraint class the vertex turned out to belong to. Output is taken after each fit. After resetting up the event, the vertices are fitted in reverse order (indicated by primes), II', I', in order to obtain the best information on the production vertex I. However, since vertex II' belongs in general to the 0c constraint class, the ambiguity in sign in the quadratic formula used to obtain the momentum of the penultimate particle must be resolved.[3] This is done by retaining the value of k_Σ at vertex I from the I, II fitting sequence and doing the II', I' fit twice, using first the -, then the + sign in the quadratic formula. Whichever sign yields a k_Σ at vertex I' closer to the above is accepted. This test is made by accepting the one yielding the smaller of the quantities

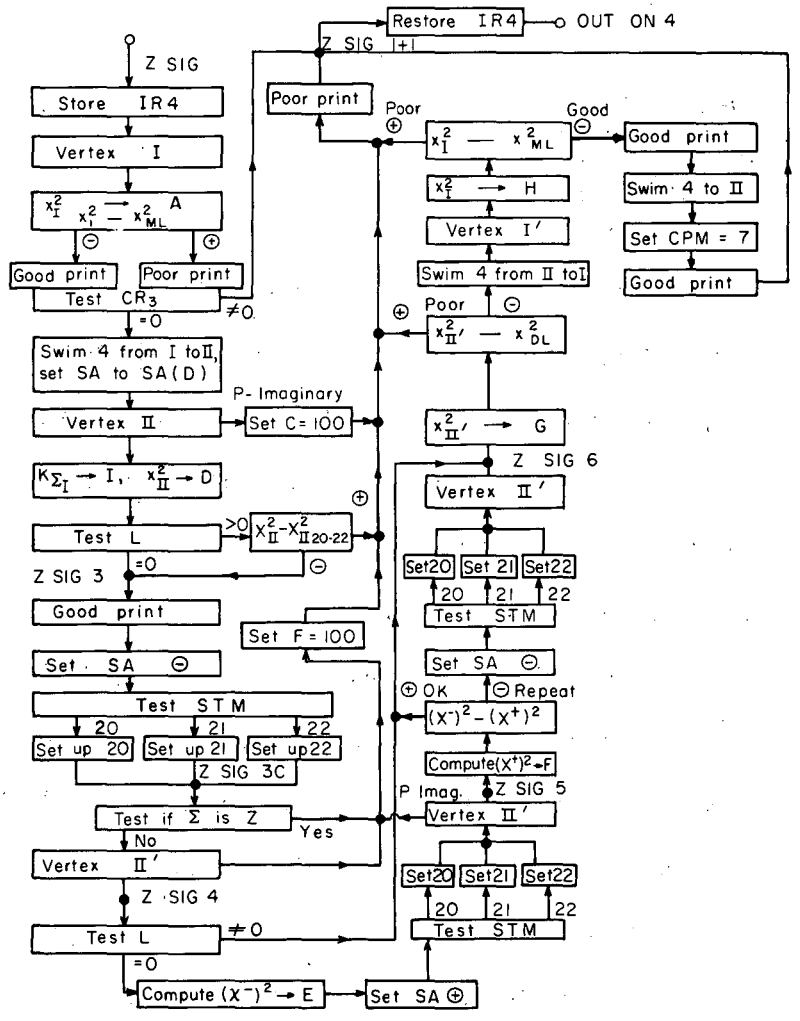

MU-20569

Fig. 11. Logical flow diagram of the sigma subrountine (Z SIG).

$$(\chi^-)^2 = \frac{(k_{\Sigma_I} - k^-_{\Sigma_{I'}})^2}{(\delta k^-_{\Sigma_{I'}})^2} ,$$

$$(\chi^+)^2 = \frac{(k_{\Sigma_I} - k^+_{\Sigma_{I'}})^2}{(\delta k^+_{\Sigma_{I'}})^2} .$$

If the - sign turns out to be correct, the - fit must be repeated, since the intervening + fit has used and has destroyed the KICK portions of the track banks. Note that in the course of these II' I' fits the analysis cannot be done if the Σ is zero length, since the constraint class at vertex II' would be -2; at this point the analysis is terminated.

During the course of the analysis, the various quantities (e.g., χ^2) describing the fits are stored into the storage words A, D, E, etc. of Main Bank for appearance on the output. After the II', I' fit track 4 is swum to its end at vertex II' so that its variables can be compared with those obtained in the I, II fit. In all cases tried to date they have been "statistically indistinguishable".[14] This is a very powerful test of one of the assumptions on which KICK is based, namely that a complicated multivertex event can be fitted in series vertex by vertex rather than as a complete entity in "one grand fit."

Figure 12 illustrates the treatment of the ambiguity between interaction of the incident K^- at rest (KS) and in flight (KF) in order to produce charged Σ hyperous. Since these event types 30, 31, and 32 (see Figs. 1, 8, and 9 for particle identification), although themselves ambiguous, will later be used as parts of more complex ambiguous events, the events are prepared as closed subroutines.

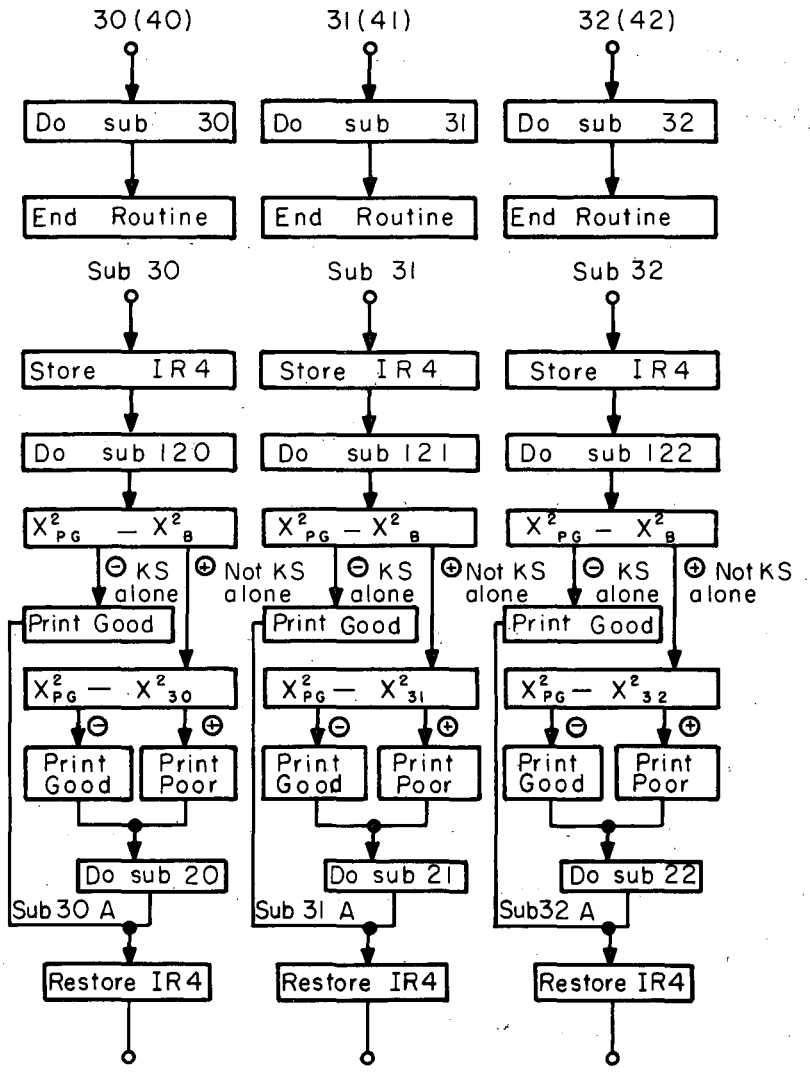

Fig. 12. Logical flow diagram for event-type subroutines for event types 30, 31, and 32.

Closed subroutines within KICK, called SUB 120, SUB 121, and SUB 122, respectively treat the event as KS, i.e. on the basis that the K^- interacted at rest. These routines (although not described in detail) check:

(a) the curvature of the incoming K^- against the known curvature a stopping beam track should have,

(b) the length of the Σ track, to make sure it does not exceed the range of a Σ from such an interaction,

(c) consistency of the main production vertex, such as the momentum of the primary π, against the known momentum for the interaction, the collinearity of the Σ and the primary π, etc.

(d) the kinematic fit at the decay vertex II.

The extent to which these points check is expressed by a quantity χ^2_{PG}. Since at low energy there is a large a priori probability for the stopping-K^- hypothesis, if χ^2_{PG} compares favorably to the parameter χ^2_B, the stopping hypothesis is accepted with no further testing. If not, the stopping hypothesis may still be acceptable, therefore a test is made against a larger χ^2 parameter. If the stopping hypothesis is not accepted uniquely, the in-flight interaction hypothesis is tested by entering SUB 20, SUB 21, or SUB 22. These have been described above.

The subroutines for event types 30, 31, and 32 are also used in the treatment of types 40, 41, and 42, which differ only in that they are to test both the stopping and in-flight interaction hypotheses. It should be noted that this would be achieved if $\chi^2_B = 0$. It will be recalled that the Track Read Routine makes this setting of χ^2_B just prior to transfer to the Event-Type Subroutine if a 40-series event type is to be processed. In all other cases χ^2_B is set to the appropriate one of the parameter words 30, 31, or 32 (Table III).

The ten scattering event types 10-19 (whose labeling scheme is shown in Fig. 13, are handled by the Event-Type Control Subroutine (Fig. 14), which illustrates further that certain event types have enough common features that the corresponding subroutines can be compressed considerably. The entries to the setup routine must be partially duplicated, since a given entry can pertain only to a group having the same charge configuration. A beam K^- also needs a separate entry, since it must be subjected to the initial beam average. This routine also illustrates the insertion of special processing steps not provided by the standard processing routines when these special steps are pertinent to only one type of event. Two special features are included:

(a) It should be recalled that the auxiliary computation routine ZPCOM (used by the print routine) tests for any leaving (L) track for which R < L and sets a special mark if it finds one. The Event-Type Control Subroutine for scatterings tests this special mark, and will if necessary refit the vertex with the appropriate track changed from L to S.

If this refit is called for, a marker (ZET11F) must be set so that, should the second (i.e., S) fit fail the -S feature can be disabled. If this precaution were not taken an attempt would be made to refit the event with S changed back to L--which has of course already been tried.

(b) Type 14 in a K^--p scattering; the scattered K^- track frequently ends in the chamber. The cross section for reactions such as $K^- + p \rightarrow \Lambda + \pi^0$ is large for slow K^-'s, and one cannot tell by inspection whether the K^- stopped (in which case the scattered K^- must be setup as an S track) or interacted in flight (in which case we must take momentum from curvature by assigning L.)

Normally the recoil proton stops in the chamber, so that its momentum is very well known from its length. If the scattered K is also called S its momentum is also well known, and the fit is very much overdetermined.

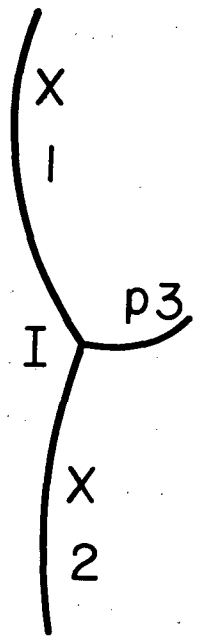

Types 10 - 19

$X + p \Longrightarrow X + p$

MU-20571

Fig. 13. A scattering event (types 10 through 19).

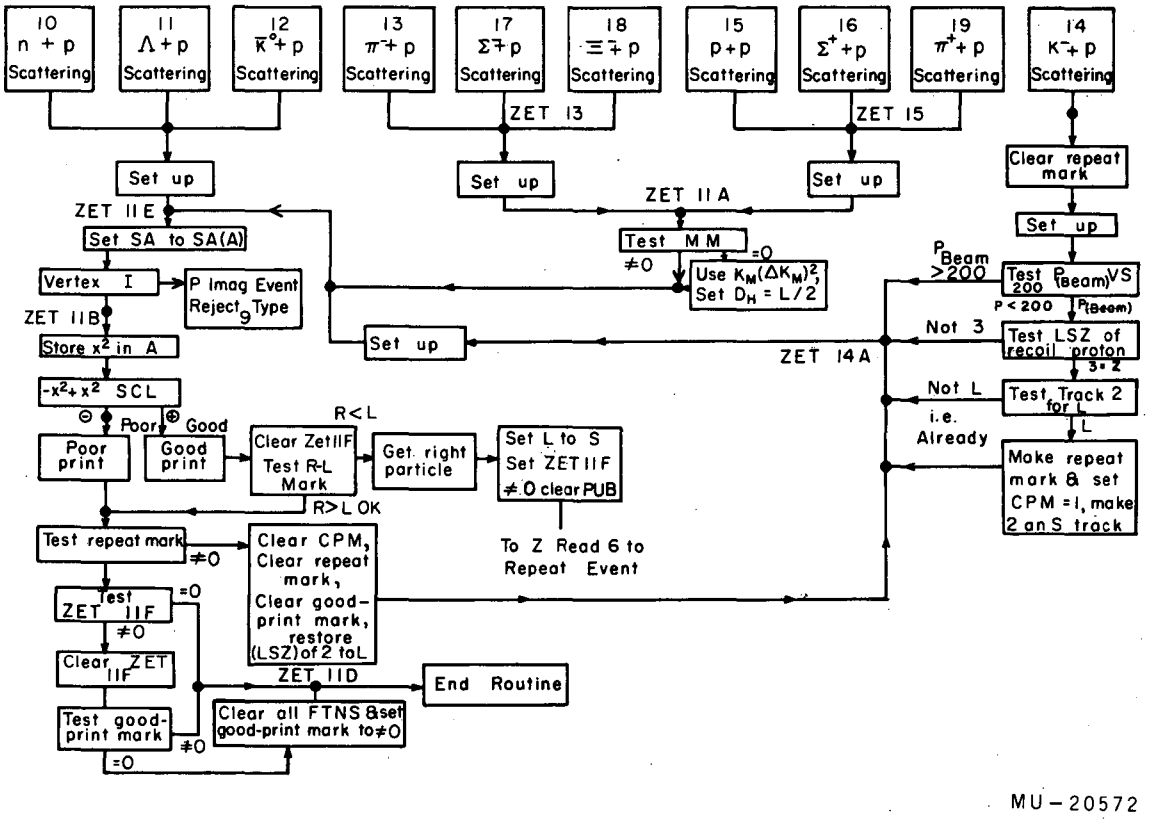

Fig. 14. Logical flow diagram of the scattering-event-type subroutine (event types 10 through 19).

The chances are therefore large that if the K really did stop the fit gives a good χ^2; if the K did not stop the fit gives a very bad χ^2, the -S feature then will be invoked, and the vertex will be refitted with the scattered K changed from S to L. This second fit should give an acceptable χ^2, and the ambiguity will have been resolved.

Consider, however, the frequent and more ambiguous case in which the recoil proton is so short as to be zero length, so that information is missing on all three of its variables. Then at best the scattering is a 1C fit. In addition, there is a large uncertainty in the momentum of the slow incoming K, so that the 1c fit is poorly determined. If the S hypothesis is wrong one cannot in this case rely on a large χ^2 for the fit, so that it is desirable to make a second "L"-hypothesis fit and compare the results of both fits. This repetition is controlled by a special repeat mark whose action is clear from Fig. 14.

As a final example of the analysis of simple (i.e., unambiguous) events, the track configuration of Type 29, $\overline{K}^0$ production and subsequent decay, is shown in Fig. 15, and the straightforward logical flow diagram of the corresponding event type subroutine is shown in Fig. 16. After the statistically valid II-I sequence of vertex fits has been done, it would still be desirable to return to vertex II to get a best fit there. Vertex I is underdetermined, so that the I-II sequence is not possible. The most accurate fitted values at II can be obtained by the P-Vert feature described in Sect. VII; however that has not been employed here. An approximation of the fitted values at II can be obtained by another vertex II fit which uses the latest fitted variables for all tracks. The errors calculated at the end of this fit will be far too small, but the fitted values are at least improved over those from the first fit.

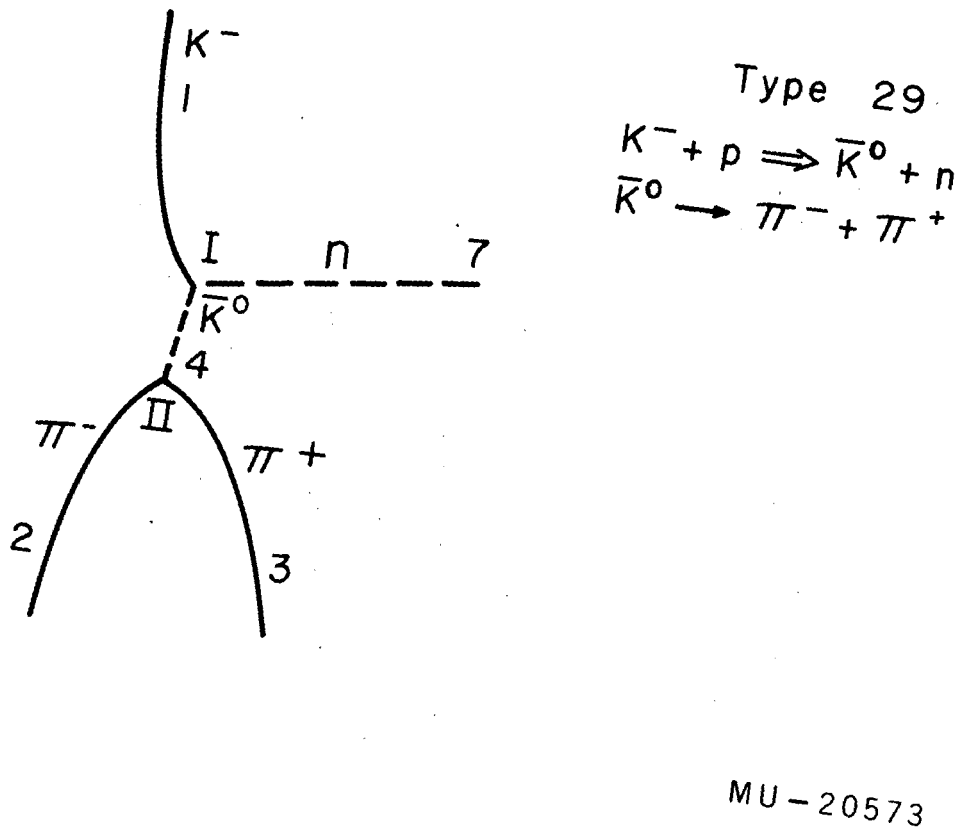

Fig. 15. Event type 29.

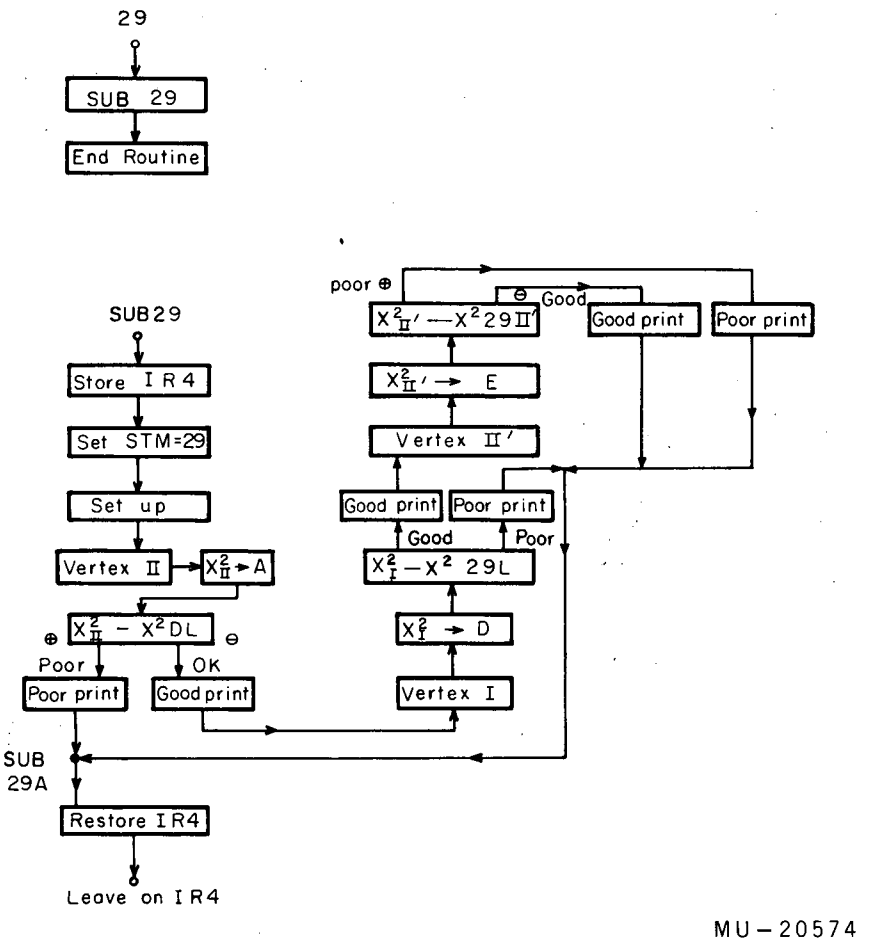

Fig. 16. Logical flow diagram for event-type subroutine for event type 29.

The treatment of ambiguous events is illustrated by the logical flow diagrams of Fig. 17 for event types 23 and 36; event type 23 is ambiguous with respect to types 21 and 22, which pertain to the production of Σ^+ hyperons and their decay via the π^+ and p modes. Type 23 arises if the positive decay track cannot be uniquely identified. In a simple event type (e.g. type 21 or 22) no track is ambiguous, so that there is a one-to-one correspondence between the track number and the track bank in which it is placed on read-in from PANG; in type 21 the sequence is K^-, π^-, π^+, Σ^+, whereas in type 22 it is K^-, π^-, p, Σ^+. In an ambiguous case one or more of the tracks have multiple interpretations, so that more track banks are utilized than there are tracks. In type 23, for example, the track banks are filled as shown at the top of Fig. 16: where track 3 occupies two track banks, the π^+ interpretation in TB3 and the proton interpretation in TB4. Thus, the track banks are not in proper condition for processing by either SUB 21 or SUB 22. However, they can be properly interchanged prior to use of these routines. Note that the track banks are always returned to their original order at the end of processing prior to execution of the End Routine in case it should be necessary to repeat the processing.

Event type 36 has a deceptively simple appearance, a K^- from the end of which emerge a π^+ and a π^-. This could be any one of the following production-decay sequences:

$K^- + p \Rightarrow \bar{K}^0 + \pi^0$, $K^0 \rightarrow \pi^+ + \pi^-$,	KF	Type 29
$\Rightarrow \Sigma^+ + \pi^-$, $\Sigma^+ \rightarrow n + \pi^+$,	KF or KS	Type 30
$\Rightarrow \Sigma^- + \pi^+$, $\Sigma^- \rightarrow n + \pi^-$,	KF or KS	Type 31

where the particle that is either K^0 or $\Sigma^\pm$ decays before traveling a detectable distance from the point of production.

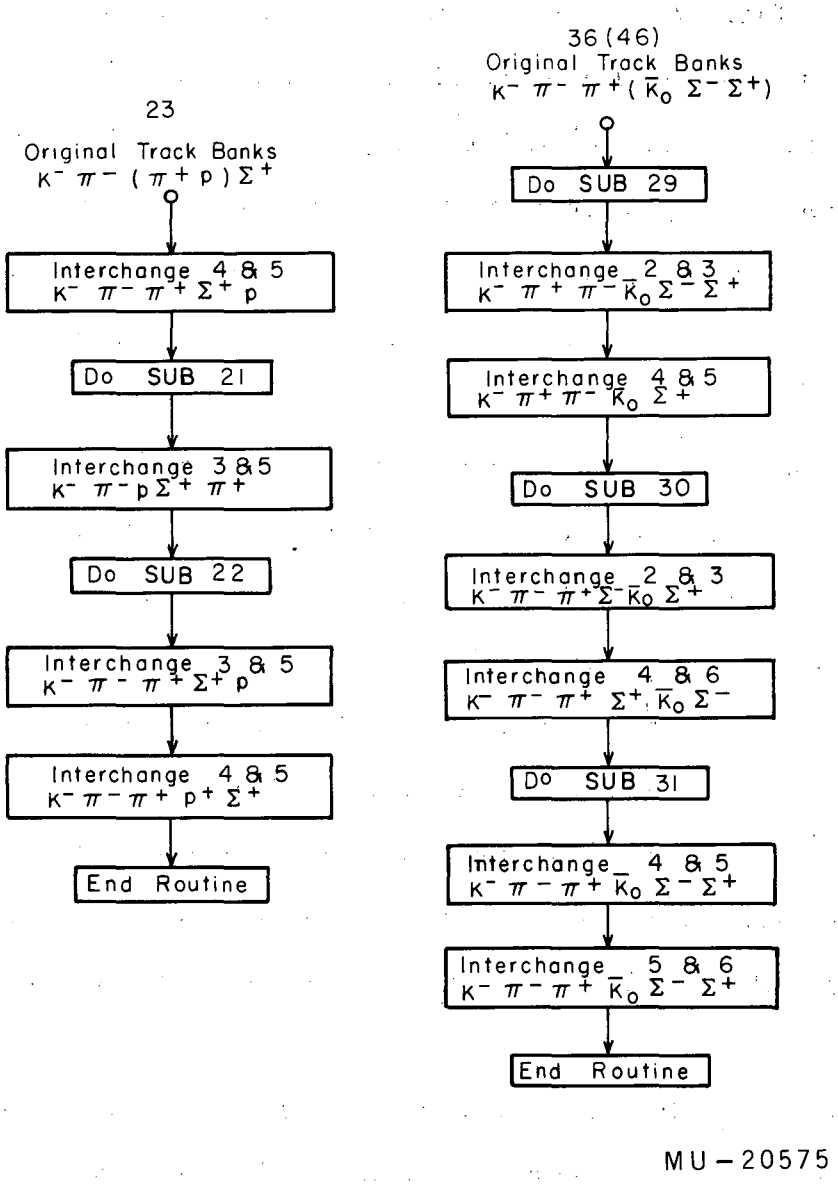

Fig. 17. Logical flow diagram for the ambiguous-event-type subroutines for event types 23 and 36.

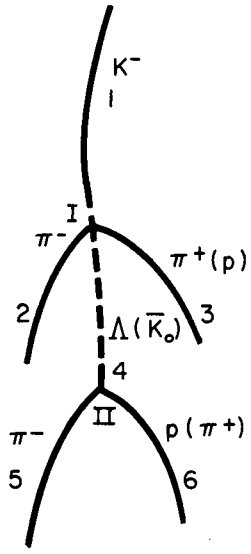

Type 46

1- $K^- + p \Rightarrow \bar{K}_0 + \pi^- + \pi^+ + n$
$\bar{K}_0 \rightarrow \pi^+ + \pi^-$

2- $K^- + p \Rightarrow \bar{K}_0 + \pi^- + p$
$\bar{K}_0 \rightarrow \pi^+ + \pi^-$

3- $K^- + p \Rightarrow \bar{K}_0 + \pi^- + p + \pi^\circ$
$\bar{K}_0 \rightarrow \pi^+ + \pi^-$

4- $K^- + p \Rightarrow \Lambda + \pi^- + \pi^+$
$\Lambda \rightarrow p + \pi^-$

5- $K^- + p \Rightarrow \Lambda + \pi^- + \pi^+ + \pi^\circ$
$\Lambda \rightarrow p + \pi^-$

6- $K^- + p \Rightarrow \Sigma^\circ + \pi^- + \pi^+$
$\Sigma^\circ \rightarrow \Lambda + \gamma$
$\Lambda \rightarrow p + \pi^-$

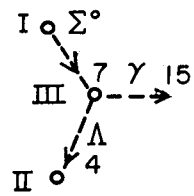

Track	1	2	3		4		5	6		7	15
Track Bank	1	2	3	4	5	6	7	8	9	10	15
Particle	K^-	π^-	π^+	p	$\bar{K}_0$	Λ	π^-	π^-	p	Σ°	γ

MU-20576

Fig. 18. Event type 46 (1.15-Bev/c K^--p experiment).

The fact that KICK, although written for the low-energy K^--p experiment, is readily adaptable to other experiments can best be illustrated by examining an event from the experiment on the interaction of 1.15-Bev/c K^- mesons on protons. The configuration of this event (Type 46), the six hypotheses to be tested, and the track bank contents are shown in Fig. 18. The tracks are labelled according to hypothesis 4, with labels for hypothesis 2 in parentheses. Hypothesis 6 differs from 4 in having vertex III, (also shown in Fig. 18) the decay of the Σ^0 into a Λ and a γ, inserted between vertices I and II. This picturization is only schematic, since vertex III is spatially coincident with vertex I because of the short lifetime of the Σ^0 ($\approx 10^{-19}$ sec). Hypotheses 2, 4, and 6 involve no unobservable particles; hypotheses 1, 3, and 5, although they involve one unobserved neutral, are still kinematically solvable. However, more than one unobservable π^0 at the production vertex I is energetically possible. Although no fit would be possible in this case, KICK can (via GUTS) compute the mass unaccounted for by the particles visible at the vertex, i.e., words 30 and 31 of MB, Table I.

It should be recalled that in the low-energy K^--p experiment, from which the first examples were extracted, the ambiguous event-type subroutines were made up by properly combining the simple (nonambiguous) event-type subroutines. This was most economical, since simple events occurred more rarely than ambiguous ones. However, in the higher-energy experiment now under discussion the situation is reversed; it is extremely rare that the ambiguities illustrated in Fig. 18 can be resolved by visual identification of the tracks. Hence, an alternative treatment of such cases is carried out; the subroutine (Fig. 19) is written to test each one of the hypotheses successively. However, some provision must be made to treat those cases in which the ambiguity can be resolved. This is done by testing for whether such a resolution

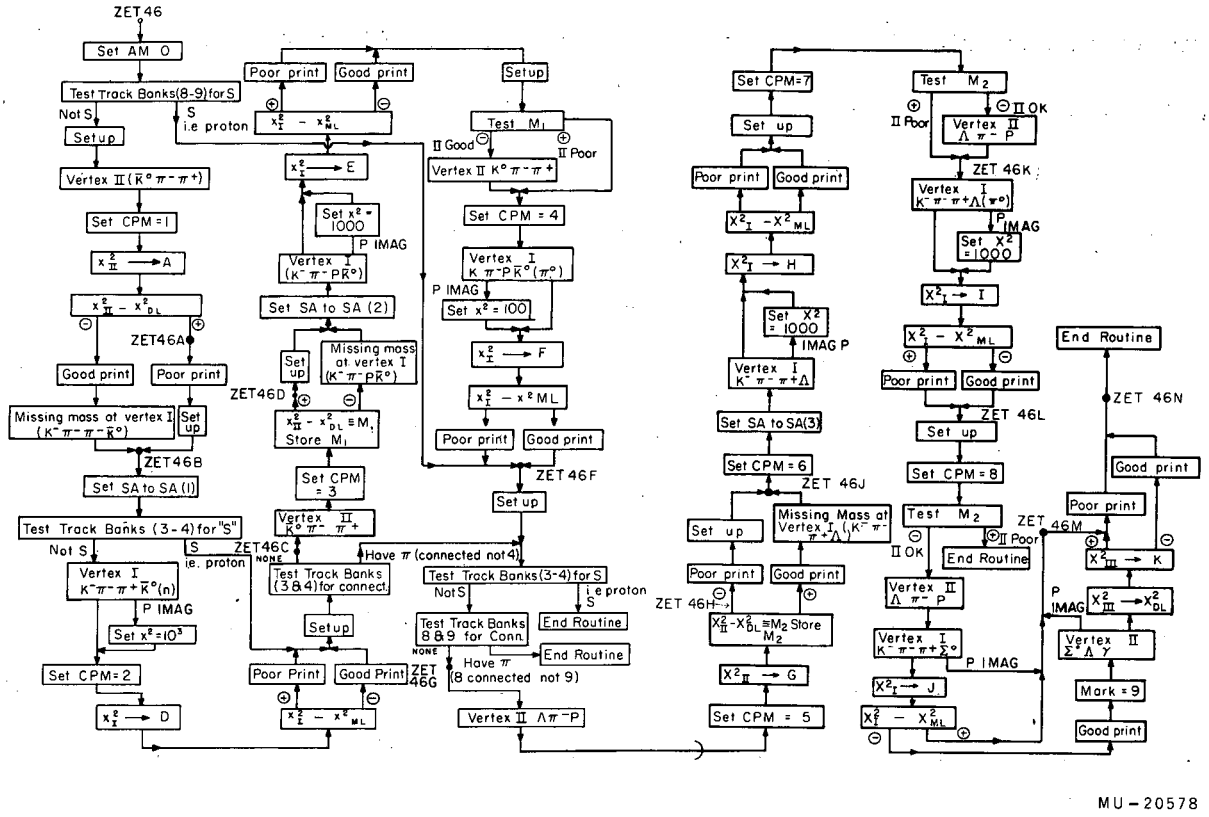

Fig. 19. Logical flow diagram for event-type subroutine for event type 46 (1.2-Mev/c K^--p experiment).

has been effected and if so skipping the excluded hypotheses. Thus in type 46, for example, Track Banks 8 and 9 (and later 3 and 4) are tested for a stopping track. If one is found, it must have been a proton; the hypotheses involving a mesonic particle for this track can be excluded. Alternatively the proton hypothesis may be excluded. If these same two pairs of track banks pertained to a pion that stopped and showed the characteristic $\pi \rightarrow \mu$ decay, this decay would have been previously analyzed and connected into this main event. If, on test, it is found that such a connection has been made onto the pion interpretation track bank, the track is uniquely identified as a pion. The hypotheses involving its interpretation as a proton can be skipped. The physics or kinematics of a subsequent connected event may resolve the ambiguity. For example, one of the ambiguous tracks may scatter on a chamber proton; analysis of both scattering interpretations could yield one that fits and one that fails. Only the successful interpretation is connected to the pertinent track bank. Again, the alternative hypotheses is rejected by means of the aforementioned tests.

VII. EXTENSIONS OF KICK

A large program of this nature, designed to process data in a rapidly evolving field such as high-energy physics, must itself be subject to continued evolution.[7] Several extensions of the program are in the developmental stage and will be incorporated in the near future.

A. Vertex Fits with a Fixed Momentum (PVERT)

As has already been mentioned in the discussion of type 29 (Fig. 15), it may not always be possible to get the "best"[14] fitted values on all tracks by using the apparatus described so far.

The following procedure gives the "best" values for track variables, and the correct value of χ^2 for a multivertex event, but not the correct errors on some track variables (namely those last fitted by PVERT).

After the II - I fit in type 29, the $\overline{K}^0$ track connecting the two vertices has been completely fitted and its vector momentum, P connecting can be calculated. As has been empirically shown,[14] essentially the same P_{conn} would be obtained were it possible to do the I - II sequence of fits. If the II fit is repeated in such a way as to force the connecting track to have the correct value P_{conn} then the other tracks at the vertex will also have their correct values.

One way to achieve this result is to set $\delta\phi_{conn} = \delta \tan \lambda_{conn} = \delta k_{conn} = 0$.

Although a least-squares fit subject to constraints can be formulated to handle zero errors, it is more convenient to add P_{conn} to the constraint equations and remove the variables associated with the connecting track from those which GUTS is permitted to vary while making a fit.

Notice that after such a fit the fitted errors will be too small, reflecting the fact that some input errors were set zero. However, once the correct fitted values are known, χ^2 for a multivertex event can be computed, since

it depends only on the fitted variables, the measured variables, and the measured errors, and not on the computed errors.

B. Vertex Fits Conserving Three-Momentum Only

As KICK is extended to higher-energy experiments it has to deal with vertices which have many charged tracks and from which in addition one or more neutral particles may escape.

It will be recalled that KICK (via GUTS) permits the computation of the "missing" four-momentum (and its error) at the vertex and hence the "missing" mass at the vertex, i.e., the 4-momentum unaccounted for by the visible tracks at the vertex, and the mass associated therewith.

However, in order to make a missing-mass calculation, it is necessary to assign masses to all charged tracks. At the higher energies these mass interpretations may be ambiguous. Thus consider the antiproton annihilation shown in Fig. 20, with four charged prongs and a near-by decay of a K^0_1 meson. The law of conservation of strangeness requires that a second K meson (either charged or neutral) be produced. Some of the possible reactions are listed in Fig. 20. Note that for the first hypothesis the K^- may be either one of the two negative tracks, so that two missing-mass calculations would be required. In all, five fits are required to test the hypothesis written down, and many more would be needed if one considered such possibilities as that of a missing π^0, the replacement of one of the π^+, π^- pairs by a K^+, K^- pair, or the possibility that the incoming $\bar{p}$ is a π^-.

However, an extension of GUTS that will conserve three-momentum instead of four-momentum and hence is independent of mass assignments has been prepared by H. D. Taft, and is being investigated. The χ^2 of this fit is a proper measure of the likelihood of the hypothesis that no neutral particles escaped. Moreover, if this χ^2 is acceptable there has been supplied for each

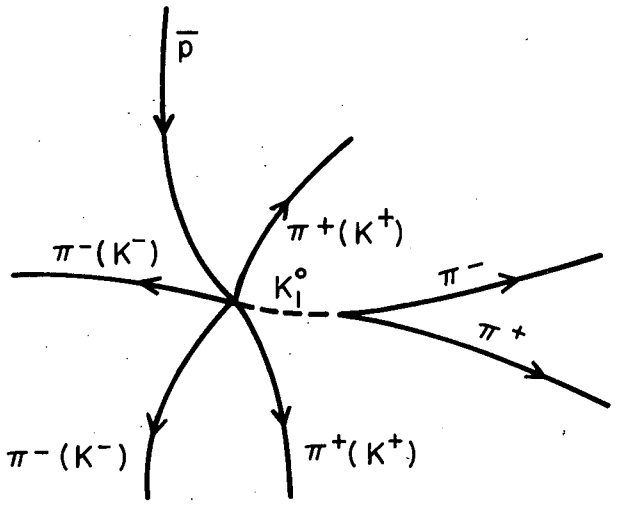

$$\bar{p} + p \Longrightarrow K_1^\circ + K^- + \pi^- + \pi^+ + \pi^+$$
$$\Longrightarrow K_1^\circ + K^+ + \pi^+ + \pi^- + \pi^-$$
$$\Longrightarrow K_1^\circ + (K^\circ)_{\text{seen}}^{\text{not}} + \pi^- + \pi^- + \pi^+ + \pi^+$$

MU-20577

Fig. 20. Typical antiproton annihilation.

track a fitted momentum more precise than the measured momentum (which for certain tracks may have been highly uncertain). Having these fitted momenta one can go about testing various mass assignment hypotheses more efficiently than by calling for an iterative fit for each one, as is necessary with the 4-momentum GUTS classes. One can instead simply use the fitted momenta and errors and calculate χ^2 for the conservation of energy. This takes less computer time, and may be an advantage for highly ambiguous events. It should further be pointed out that in the extreme relativistic limit mass ambiguities simply cannot be resolved by kinematic fits, i.e. three- and four-momentum fits give the same results. Even at moderate energies many mass permutations are likely to satisfy a four-momentum fit, and it may not be desirable to go any further than a three-momentum fit.

In any case it is frequently desirable to try a three-momentum fit first, because the attainment of a bad fit means that some neutral particle escaped, so that the list of hypotheses to be tested may be considerably shortened.

VIII. CONCLUSION

Economy and generality has been achieved in KICK by constructing general processing routines which are then used in individual event-type subroutines. This method of program organization gives an automatic coding aspect to the writing of event-type subroutines, since the individual processing routines can be called into play in whatever order is necessary for the proper analysis of the event.

The program has been in actual use since early 1959, so that a considerable amount of information has been obtained concerning the program's running time and failure rate. GUTS usually requires several iterations (1/2 second each) to fit a vertex. The time to process a whole event varies from 5 to 30 seconds, depending on the complexity of the event, the number of hypotheses to be tested, the amount of output taken, and the number of iterations required by GUTS to achieve the fits. Approximately 10% of the events processed "fail" in KICK. Most of the failures are due to poor measurements on hard-to-measure events, which are the result of poor operating conditions or faulty photographic processing. Almost all of these events can be carefully remeasured to give satisfactory or explainable fits.

IX. ACKNOWLEDGMENTS

The authors are indebted to Margaret Alston, John Peter Berge, John Burren, Janice Button, Orin Dahl, Myron L. Good, Nahmin Horwitz, Donald H. Miller, Frank T. Solmitz, and Horace D. Taft for many helpful discussions and suggestions. One of us (JNS) wishes to thank Prof. Luis W. Alvarez and his entire group for its hospitality during the course of this work.

Dr. Sidney Fernbach made very convenient arrangements for us to spend long hours code checking on the IBM 704's at the Livermore Laboratory.

FOOTNOTES AND REFERENCES

1. P. Berge, W. Humphrey, A. H. Rosenfeld, R. Ross, J. N. Snyder, F. Solmitz, and H. Taft, Digital-Computer Analysis of Data from Bubble Chambers. I. General Survey of a System. (Referred to as I.)

2. W. Humphrey, R. Ross, and F. Solmitz, Digital-Computer Analysis of Data from Bubble Chambers. II. The Analysis of Tracks. (Referred to as II.)

3. P. Berge, F. Solmitz, and H. Taft, Digital-Computer Analysis of Data from Bubble Chambers. III. The Kinematic Analysis of Interaction Vertices. (Referred to as III.)

4. R. Adair and H. D. Taft of Brookhaven National Laboratory and Yale University are, in fact, using GUTS in a similar kinematic analysis program.

5. In an alternative operating mode it is possible to output this information onto two binary tapes, one (the "good" tape) containing those events which have satisfied the currently used fitting criteria, and the other (the "poor" tape) containing those events which have not.

6. The program is written in the notation of the Symbolic Assembly Program (SAP) for the IBM 704.

7. A program of this nature is subject to continuing revision and evolution. An up-to-date version of the program, including the details of the machine coding, is given in a paper by the Alvarez Group: Arthur H. Rosenfeld, Ed., The KICK Program, UCRL-9099, March 1960.

8. As discussed in Articles I and II, the fundamental variables that PANG calculates (ϕ_m, $\tan \lambda_m$ and k_m) apply to the middle of a track, at which point they should have a Gaussian distribution and be uncorrelated. It is of course possible to transform them to the beginning or end of a track;

however, the range-momentum (and hence the range-k) relationship is highly nonlinear - in fact, $k \rightarrow \infty$ as a particle comes to rest. The variables at the ends of a track thus no longer show Gaussian distribution, and the largest deviation occurs at the slower end of a track.

It is then clear that the most satisfactory way to formulate GUTS would be to use "middle variables" for all tracks (future versions should be so formulated).

However, GUTS has been written in such a way as to permit one variable only (normally the incoming track) to be specified at a distance D from the vertex.

Two versions of KICK exist; the more flexible one described here leaves control of D to the event-type control subroutine, making it possible to save some computer time by bypassing the D feature on high-energy tracks.

The alternative later and more precise version (see Footnote 7) automatically uses the D feature at <u>every vertex.</u> If the incoming track has not yet been fitted, the vertex routine sets $D = \frac{L}{2}$; if fitted, it sets D = L. This means of course that if a track is set up "at the end" it is actually set up with ϕ_{end}, $\tan \lambda_{end}$, but k_{middle}. In this version the D_H location MB + 13 is freed.

9. It should be noted that the information in the -SM word (ZTi + 14) can be extracted for a simultaneous examination of the LSZ word (ZTi + 15) and the mass-charge word (ZTi + 18). In the later alternative version of KICK the -S function of this word is eliminated and the space is used to hold the marker word (which shows at which end of the track the current variables apply). This "End word" controls the D-hold feature of GUTS. (as discussed in Footnote 8).

10. As mentioned in Footnote 8, the PANG variables can be uncorrelated only at the middle of a track. However, in the version of KICK described here, the correlations between PANG variables, even at the ends of a track, were regarded as negligible, at least for "leaving" tracks. This approximation effected some economies and may be satisfactory for short tracks. However, these correlation terms become important for the long tracks seen in large chambers.

In the version of KICK here described the MM word of each track indicates whether the error matrix is diagonal (uncorrelated errors on unfitted tracks) or not (correlated errors after a fit).

The alternative, more precise version of KICK deals with full (correlated) error matrices at all times. The MM word hence gives no information on matrices but does indicate the status of a track -- fitted or unfitted.

11. The alternative, more precise version of KICK, which always uses the GUTS D feature (see Footnote 8), handles up-beam and down-beam transformations differently. The new swim routine tests the "End word" to see whether it must swim up or down. To swim up it transforms ϕ, $\tan\lambda$, k, and their error matrix. To swim down it transforms ϕ and $\tan\lambda$, but <u>not</u> k, and the appropriate terms of the error matrix.

12. In the alternative more precise version of KICK, which <u>always</u> uses the D feature, this can be accomplished merely by entering the swim routine before storing the track.

13. This is proved in UCRL 9099.

14. An explicit test of this "statistical indistinguishability" has been made on some events involving production and decay of Λ hyperons.

In this case it is not necessary to swim the (neutral) Λ track connecting the two vertices before making a comparison.

The Λ had typically a momentum P of a few hundred Mev/c with an uncertainty of a few Mev/c. Of this sample, the majority gave satisfactory fits; for these the fractional values of the discrepancies were typically

$$\frac{P_{II} - P_{I'}}{P_{II}} \approx 10^{-5}, \qquad \frac{\delta P_{II} - \delta P_{I}}{\delta P_{II}} \approx \frac{1}{200} \text{ to } \frac{1}{500} .$$

Similar discrepancies are found in ϕ, $\delta\phi$, $\tan\lambda$, $\delta\tan\lambda$. These discrepancies have not been carefully investigated since they are nearly in the range expected from numerical rounding error in the computer.

These discrepancies are usually larger for "poor" fits. ($P(\chi^2) \simeq 1\%$). The few such events in the sample studied gave

$$\frac{P_{II} - P_{I'}}{P_{II}} \sim 10^{-3}, \quad \frac{\delta P_{II} - \delta P_{I'}}{\delta P} \sim 10^{-2},$$

although the discrepancies in the other variables had not appreciably increased.

This report was prepared as an account of Government sponsored work. Neither the United States, nor the Commission, nor any person acting on behalf of the Commission:

A. Makes any warranty or representation, expressed or implied, with respect to the accuracy, completeness, or usefulness of the information contained in this report, or that the use of any information, apparatus, method, or process disclosed in this report may not infringe privately owned rights; or

B. Assumes any liabilities with respect to the use of, or for damages resulting from the use of any information, apparatus, method, or process disclosed in this report.

As used in the above, "person acting on behalf of the Commission" includes any employee or contractor of the Commission, or employee of such contractor, to the extent that such employee or contractor of the Commission, or employee of such contractor prepares, disseminates, or provides access to, any information pursuant to his employment or contract with the Commission, or his employment with such contractor.