UCRL -9271

# UNIVERSITY OF CALIFORNIA

## Ernest O. Lawrence Radiation Laboratory

TWO-WEEK LOAN COPY

This is a Library Circulating Copy which may be borrowed for two weeks. For a personal retention copy, call Tech. Info. Division, Ext. 5545

BERKELEY, CALIFORNIA

## DISCLAIMER

This document was prepared as an account of work sponsored by the United States Government. While this document is believed to contain correct information, neither the United States Government nor any agency thereof, nor the Regents of the University of California, nor any of their employees, makes any warranty, express or implied, or assumes any legal responsibility for the accuracy, completeness, or usefulness of any information, apparatus, product, or process disclosed, or represents that its use would not infringe privately owned rights. Reference herein to any specific commercial product, process, or service by its trade name, trademark, manufacturer, or otherwise, does not necessarily constitute or imply its endorsement, recommendation, or favoring by the United States Government or any agency thereof, or the Regents of the University of California. The views and opinions of authors expressed herein do not necessarily state or reflect those of the United States Government or any agency thereof or the Regents of the University of California.

UCRL-9271
Limited Distribution

UNIVERSITY OF CALIFORNIA

Lawrence Radiation Laboratory
Berkeley, California

Contract No. W-7405-eng-48

# AN ELECTRONIC DATA-ACQUISITION SYSTEM FOR USE WITH A COMPLEX NUCLEAR PHYSICS EXPERIMENT

Stanley C. Baker, Frederick A. Kirsten,
Dick A. Mack, and Clyde Wiegand

December 1, 1960

# AN ELECTRONIC DATA-ACQUISITION SYSTEM FOR USE WITH A COMPLEX NUCLEAR PHYSICS EXPERIMENT

Stanley C. Baker, Frederick A. Kirsten,
Dick A. Mack, and Clyde Wiegand

Lawrence Radiation Laboratory
University of California
Berkeley, California

December 1, 1960

## ABSTRACT

An electronic data-acquisition system is used with a nuclear physics experiment of such complexity that data processing required a high-speed computer. The system acquires data from 168 signal channels of scintillation counters and four channels of chronotron circuits. It has the capacity to store 10 events during the 0.1-sec-long Bevatron beam pulse. The storage time for the information from each event, consisting of 168 bits from the counters plus 12 bits from the chronotrons, is 40 μsec. In the interval between beam pulses, the stored information is punched onto paper tape in a form suitable for computer input.

This report describes the over-all characteristics and operation of the system. The specific parts of the system and techniques for semi-automatic testing are given in the companion reports.

# AN ELECTRONIC DATA-ACQUISITION SYSTEM FOR USE WITH A COMPLEX NUCLEAR PHYSICS EXPERIMENT*

Stanley C. Baker,† Frederick A. Kirsten,
Dick A. Mack, and Clyde Wiegand

Lawrence Radiation Laboratory
University of California
Berkeley, California

December 1, 1960

## I. INTRODUCTION

Several high-energy physics experiments have recently been proposed which would require the acquisition and processing of data in amounts that are very large compared to previously performed counter experiments. The electronic data-processing techniques now available make experiments of this type entirely feasible. This report describes a data-acquistion system which has been used in a scattering experiment of such complexity that previously used methods of data handling were quite inadequate.[1]

The rate at which humans can process data is vastly lower than that of electronic apparatus. The design philosophy we followed, therefore, was to use electronic data channels wherever the rate of data flow would be slowed by the use of any human operations such as recording, selection, or interpretation of data. In the system described herein, this required an all-electronic channel from the phototube through the output of the computer.

---

*This work was done under the auspices of the U.S. Atomic Energy Commission.

†Present address: School of Science and Engineering, University of California, LaJolla, California.

The personnel involved were thereby freed of the tedious tasks, and, aside from supervising the operation of the electronic "slave," could devote their time to studying the results of the experiments.

This new system performed several functions: It partially analyzed the data to select potentially useful nuclear events; it "de-randomized" the useful data by storing the information from randomly occurring events in an orderly fashion; and it prepared a paper-tape record of the data in a format suitable for entry into an IBM-704 computer. The results of the experiment were known as soon as the computer had processed the tape.

We believe that the electronic complexity and "untouched-by-human-hands" aspect of the data processing is novel enough and of sufficient interest to warrant the detailed description of the system given in this and five other reports.[2-6] This report reviews the general aspects of electronic instrumentation. Discussions of some specific components of the system are given in the other reports.

## II. DESCRIPTION OF THE EXPERIMENT

The purpose of the experiment was to make measurements on pion-pion scattering. A beam of 1 to 2 Bev/c $\pi$ mesons from the Bevatron was focused upon a liquid-hydrogen target. About one in $10^6$ of the pions in the beam collided with a proton in such a way as to produce a second pion and a low-energy neutron. These three particles emerged from the target and were detected by a large array of scintillators. The array was composed of 84 separate elements fitted together to form a $\pi$ steradian section of a sphere 5 ft in radius centered upon the target. The array intercepted all particles emitted in the angular interval from 4 to 60 deg with respect to

the beam. One 6810A or 7046 multiplier phototube was coupled to each scintillator element. Thus the coordinates of the three particles were roughly measured by noting which of the 84 phototubes generated an output. The energy of the neutron was determined by measuring the time difference between the occurrence of the prompt-pion phototube signals and the later neutron signal. With this information, the computer made calculations regarding the kinematics of the event, separating the physically possible events from the false "events" composed of background signals.

## III. ELECTRONICS

The electronic system can be described logically and functionally as being composed of four sections:

1. The "fast-logic" system separated the signals of the potentially useful events from the background.

2. The coordinate and time-separation detector measured the space and velocity coordinates of the particles in the potentially useful events.

3. The "buffer store" stored the selected events and at a later time punched them on to paper tape. This section included the control circuitry.

4. Auxiliary equipment, including an individual-event visual monitoring system and test circuitry, afforded examination and testing of the operation of the system.

Sections 1 and 2 are made up, in general, of standard pieces of counting equipment of wide applicability but arranged into a system especially tailored for this experiment. Section 3, the buffer store, is designed to

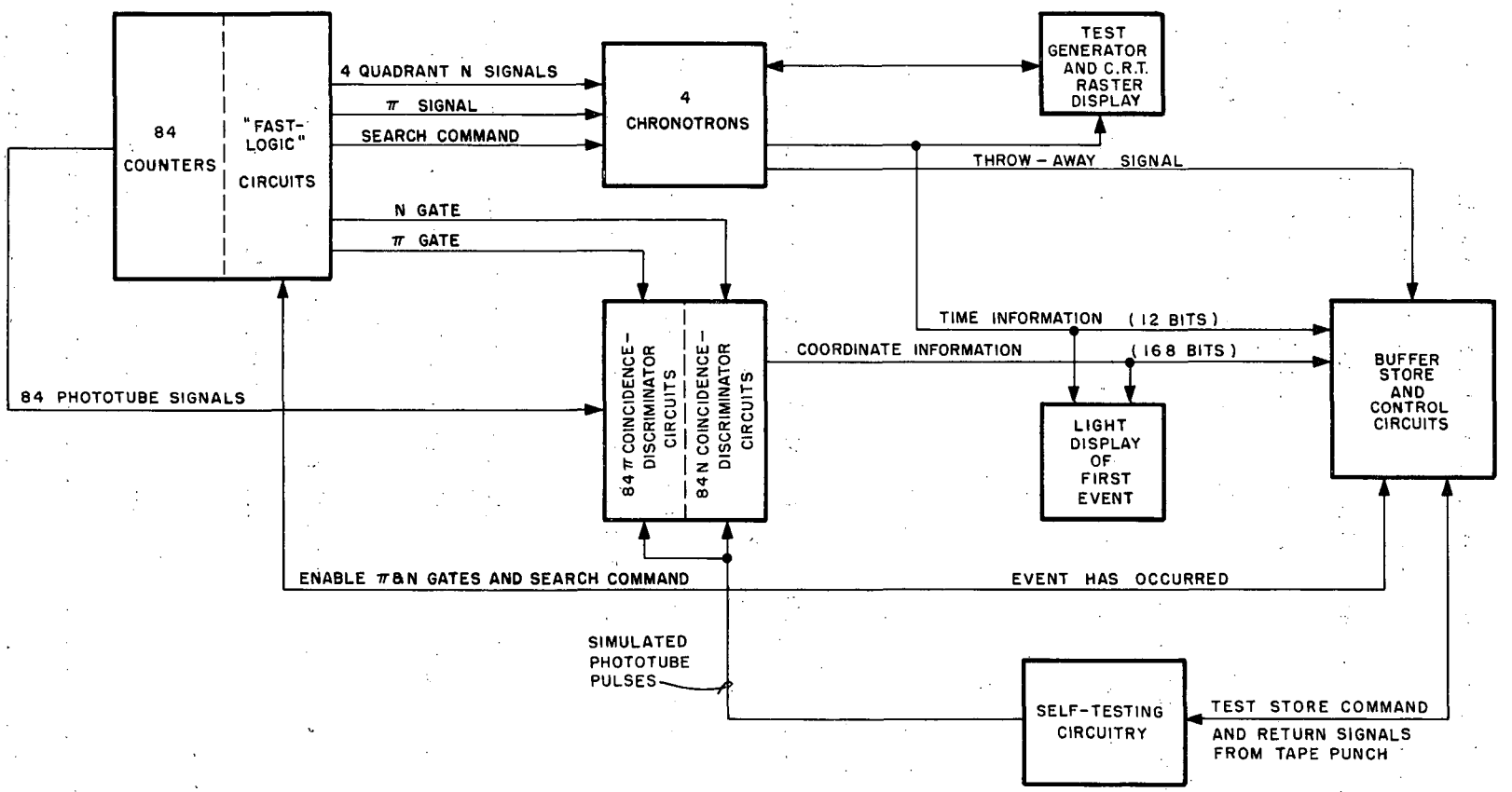


Fig. 1. Over-all block diagram.

be useful in many other experiments in its present form. The over-all block diagram is shown in Fig. 1.

An important and difficult aspect of the electronic instrumentation was the selection of potentially useful events (hereafter called simply events) from the background of unwanted interactions. The events are potentially useful until accepted or rejected by the computer. The planning of this part of the system requires a certain amount of judgment. Making the selection too restrictive may result in an undesirably small percentage of useful events in the data. This is expensive in data storage capacity and in computer time to select them from the background.

For this experiment an event was defined as one in which at least two pion-like phototube pulses and one neutron-like pulse were detected, the pions being required to be in separate quadrants of the dish. Pion-like pulses were those that had the proper amplitude and were originated by the photube 5 nsec after a beam particle interacted in the target (prompt pulse). A neutron-like pulse was one that had the proper amplitude and occurred from 11 to 43 nsec following the two (or more) pion pulses. The pion-like pulses and the neutron-like pulses are hereinafter referred to as $\pi$ pulses and N pulses, respectively.

The selection of events was performed by the fast-logic portion of the system. It completed the logical operations involved in the selection in about 200 nsec, and signaled the following circuitry when an event was detected. Figure 2 is a simplified block diagram emphasizing this portion of the system.

As shown in the block diagram, the 21 phototube dynode signals from each of four quadrants of the dish ($\alpha$, $\beta$, $\gamma$, and $\delta$) were summed in a 21-fold mixer to obtain four composite quadrant signals. The four quadrant

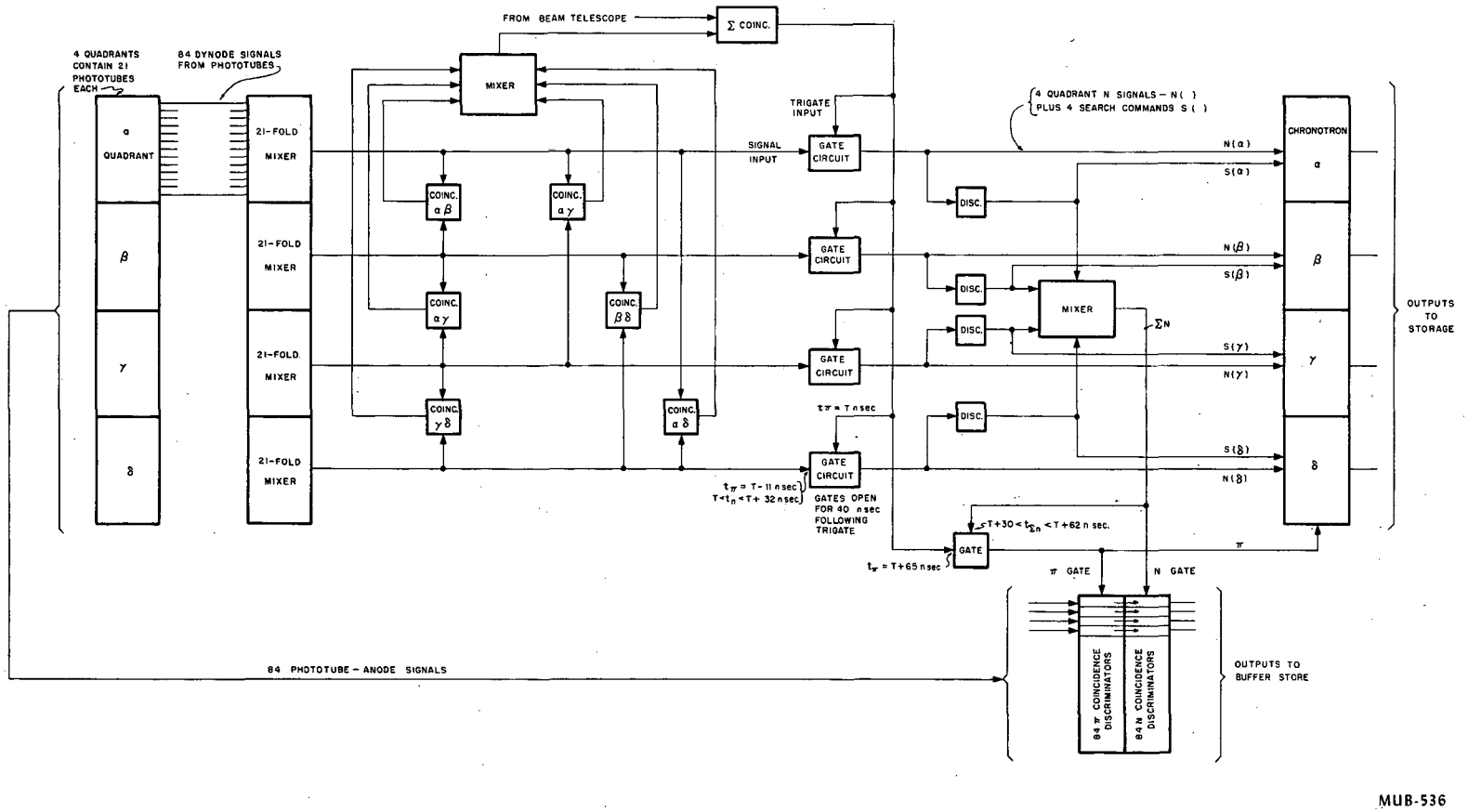


Fig. 2. Block diagram emphasizing fast-logic portion of system.

signals were fed to 6 two-fold coincidence circuits to form all possible combinations of signals from two quadrants. An output from any one of the six coincidence circuits indicated that particles had simultaneously entered two quadrants of the dish. The six outputs were mixed and applied in coincidence with a signal from a counter telescope in the beam. There was a beam-telescope signal whenever a beam particle was deflected by the hydrogen target. An output from the $\Sigma$ coincidence circuit indicated that the requirement of two pion pulses had been met.

To determine if a neutron-like pulse was present at the proper time, the output of the $\Sigma$ coincidence circuit was used to open four gates simultaneously. The open time of each gate was fixed by a delay line to be 50 nsec following a "trigate" (GATE TRIgger) command. It will be noted that the same pion signals that originated the trigate also arrived at the inputs of the gate circuits. However, as indicated on the block diagram, the transit-time of the signal from the phototube dynodes to the trigate input is T nsec, whereas the transit time from phototube to gate input is only (T-11) nsecs. Thus, provided the pion signal lasts for less than 11 nsec, only the N signals (if any) plus inevitable background pulses would pass through the gates. The gate outputs are labelled N ($\alpha$), N ($\beta$), etc. They are summed in a mixer circuit and the summation applied to a fifth gate as another trigate. The signal input to this gate is the $\Sigma$ coincidence output. The output of this circuit--the "$\pi$ - gate" signal--thus appears only if both the $\pi$ and N signals occur with the proper time relationship.

The coordinates of the particles of an event, i.e., the code number of the scintillator through which it passed, are determined and temporarily stored by 168 coincidence-discriminator circuits.[3]

The anode of each of the 84 phototubes is connected to the inputs of two coincidence-discriminator circuits. The purpose of one is to detect $\pi$ signals, the other, N signals. Therefore, one set of 84 coincidence-discriminator circuits receives as a second input the $\pi$ gate signal generated by the fast-logic section. The other set gets the N gate. When an event occurs, the 84 $\pi$ coincidence-discriminator circuits search for a $\pi$ signal, and 11 nsec later the 84 N circuits search for an N signal. Any coincidence-discriminator that receives a sufficiently large input from a phototube in coincidence with its gate sets a flip-flop circuit, which retains the information until it can be stored in the buffer store.

The time separation of the $\pi$ and N signals is measured by four chronotron circuits, one for each quadrant of the "dish."[4] It was feared that the background signal from combining 84 phototubes into one chronotron input would give too high an accidental rate. By employing four chronotrons, the computer could discard N signals coming from the wrong quadrant.

The chronotron inputs from the fast-logic block consist of the four neutron-quadrant signals--N ($\alpha$), N ($\beta$), (N$\alpha$), N($\delta$)--and one (common) $\pi$ signal. For an event of the proper type, only one quadrant signal was generated, and the chronotron measured the time difference between this quadrant signal and the $\pi$ signal when commanded to do so by the search command.

As shown in Fig. 1, the input of the fast-logic block marked "enable $\pi$ and N gates and search command" enables or inhibits the generation of $\pi$ and N gates and a search command according to its voltage. Thus the control block can control the acceptance of events for storage. Specifically, the gates are disabled between Bevatron beam times, and also during the time an event is being stored.

The interrelation of the other blocks on the diagram can be understood better by following the sequence of operation after an event. First, the fast-logic block will have detected the occurrence of event. It will generate a 20-nsec $\pi$ gate pulse immediately followed by an N gate pulse of the same length. These gates are timed to arrive at the coincidence-discriminator circuits at the same time as the $\pi$ and N signals from the phototube anodes respectively. Note that the $\pi$ and N coincidence discriminators receive the same signals from the phototubes; they rely on the timing of the gates to separate the $\pi$'s from the N's. Those coincidence discriminator circuits that have received phototube signals while the gates are present will have triggered their discriminators and set their flip-flops. The flip-flops then perform a temporary storing action until the event can be placed in the core storage.

Simultaneously, signals are applied to the chronotron inputs. Since the velocity of both $\pi$'s is very close to that of light, they strike the counters simultaneously, and their occurrence can be heralded by a single pulse--the "$\pi$ signal." From 11 to 43 nsec later, a pulse arrives on one of the quadrant N-signal lines corresponding to the quadrant of the phototube array in which the neutron landed. The chronotron measures the time difference and sorts it into one of seven serial "time boxes," the narrowest being about 3 and the widest about 7 nsec. The output of the chronotron is digitized into a 3-bit binary code for each of the four channels. The code for the appropriate quadrant contains the number of the "time box" that corresponds to the particular event. The codes for the other three quadrants contain all zeros. As with the discriminators, the values of the codes are temporarily stored by flip-flops.

The occurrence of the $\pi$ and N gates also sends an "event-has-occurred" pulse to the control circuits. This pulse in turn disables the fast gates so that no more events can be accepted until storage of the present event is complete. The control circuits initiate the routine necessary to record in the core storage the 168 bits of coordinate and 12 bits of chronotron information. The storage process takes 40 μsec. The control circuits then reset the temporary-storage flip-flops in both the discriminators and the chronotrons, and then again enable the $\pi$ and N gates to start the search for the next event. This process will be repeated either until the core store has reached its capacity of 10 events or until terminated by the end of the Bevatron beam time.

Following the end of the accelerator beam time, the control block signals the buffer store to read out the stored information including the Bevatron pulse number, onto the paper tape. The punching process occupies most of the 5-1/4 sec between beam pulses.

As described above, the gate-forming circuitry in the fast-circuitry block was designed to select for storing only those groups of signals that had some of the characteristics of the events that we wished to record. It was expected that about one beam particle in $10^6$ would form a desired event; thus the selection problem was quite severe. During the course of the experiment it was found that, owing to this high background rate, an undesirably large proportion of "events" that passed preliminary examinations by the "fast-logic" circuitry were obviously not of the desired type. Some of these contained many more than the two $\pi$ signals and one N signal of the interaction of interest. These nonuseful events consumed core storage capacity needed for potentially useful events. Therefore, a "throw-away" inspection block was added. Its function was to take a second look at the event while

it was in the temporary flip-flop storage before being placed in the cores. If the event had certain characteristics that obviously made it useless (e.g. chronotron signals in more than one quadrant), the throw-away block would signal this information to the control circuits, thereby inhibiting the "store" command, and causing the temporary storage flip-flops to be reset and allowing the $\pi$ and N gates to be generated once more. The throw-away cycle consumed 10 μsec.

During an experiment, and especially during the tune-up phase, it is convenient to have displays of the information being gathered or processed by the system. These should be arranged so that the displayed information is quickly absorbed by the observer. Easily recognized patterns are important. In this system, a panel with 180 miniature light bulbs was used for this purpose. The panel contained one bulb for each of the 168 discriminators and 12 bulbs for the chronotrons. As shown in Fig. 3, the bulbs for the discriminators were laid out in the same patterns as the actual scintillator elements. Appropriate circuits were employed to cause the light panel to display the information stored for only the first event of each Bevatron pulse,[6] i.e., to indicate which of the coincidence discriminators and chronotrons received pulses during the first event. A glance at the panel immediately indicated the geometrical and time relationship of the particles in that event. The light display panel was also useful in testing the system.

With systems of this complexity involving hundreds of individual circuits and thousands of transistors, means must be provide for quick and easy checking of the operation. In the present system, this was carried out in several ways. On the circuit level, test jigs were made for several of the standard circuit boards, which were used in large numbers. In

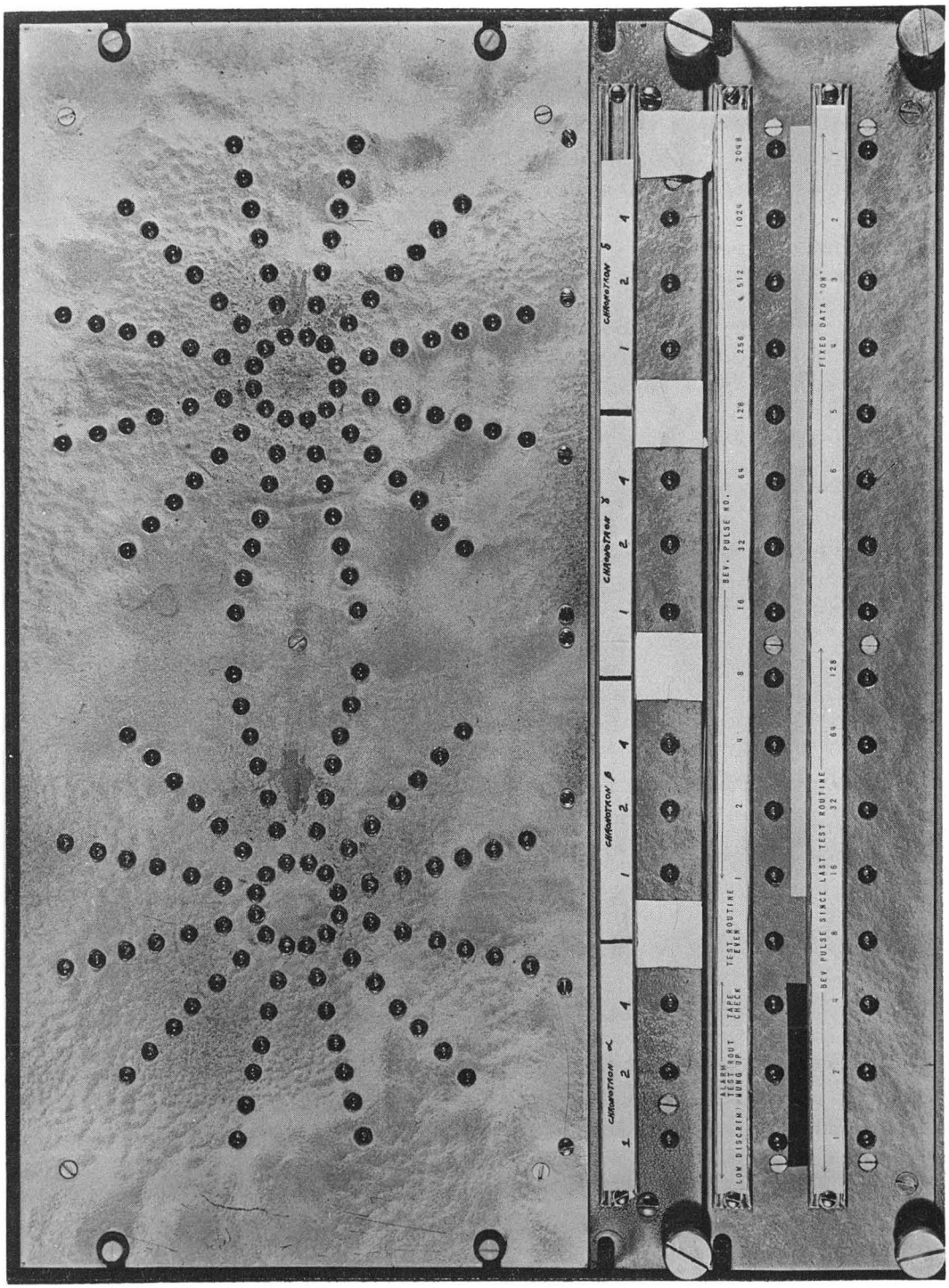


ZN-2628

Fig. 3. Light display panel.

these jigs, simulated operating signals were applied to check the performance of the circuits. As an example of system-level checks, a test pulser applied simulated phototube pulses simultaneously to either half (84) of the 168 coincidence-discriminator circuits. Together with the light display, this pulser afforded a quick check of the range of sensitivities of the discriminators of these circuits. The results of this test could also be punched out on the paper tape and automatically checked to insure that all coincidence discriminators had the same sensitivity within ±10% and that the buffer store and paper-tape punch were operating correctly. An automatic system for checking the timing accuracy of the chronotrons was also used. It displayed in a single pattern on a cathode-ray-tube screen the complete time characteristics of all four chronotrons. These tests are described in more detail in the companion papers.

## IV. GENERAL

The physical characteristics of part of the system are visible in Fig. 4. Standard 19-in.-width relay racks were used, and they were numbered 1 through 6 from left to right. Rack 1 contained part of the fast-logic circuitry. Rack 2 and the upper half of Rack 3 contained the 168 coincidence-discriminator circuits. The lower half of Rack 3 contained circuits that couple the outputs of the coincidence circuits to both the buffer store and the light panel. Rack 4 contained the buffer store. The light read-out panel was at the top of Rack 5, with the control and test circuitry below; Rack 6 contained the power supplies.

In general the circuits used in the system were built in a modular style. This modular feature is visible in Fig. 5, which shows samples of two groups of transistor printed-circuit boards. Each board contained several

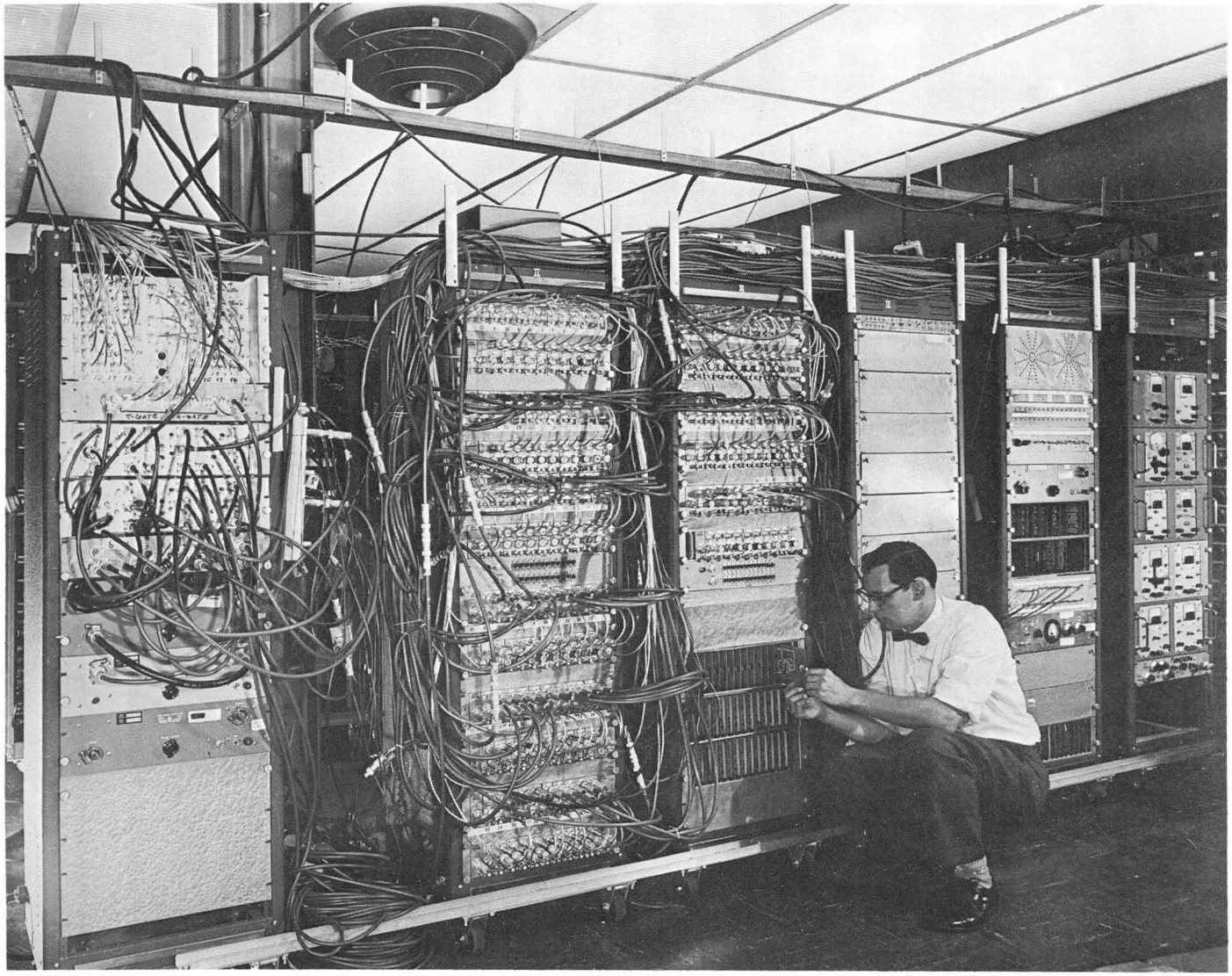

ZN-2627

Fig. 4. View of part of the fast-logic circuits, with the coincidence-discriminator units, buffer store, test and control circuits, and power supplies.

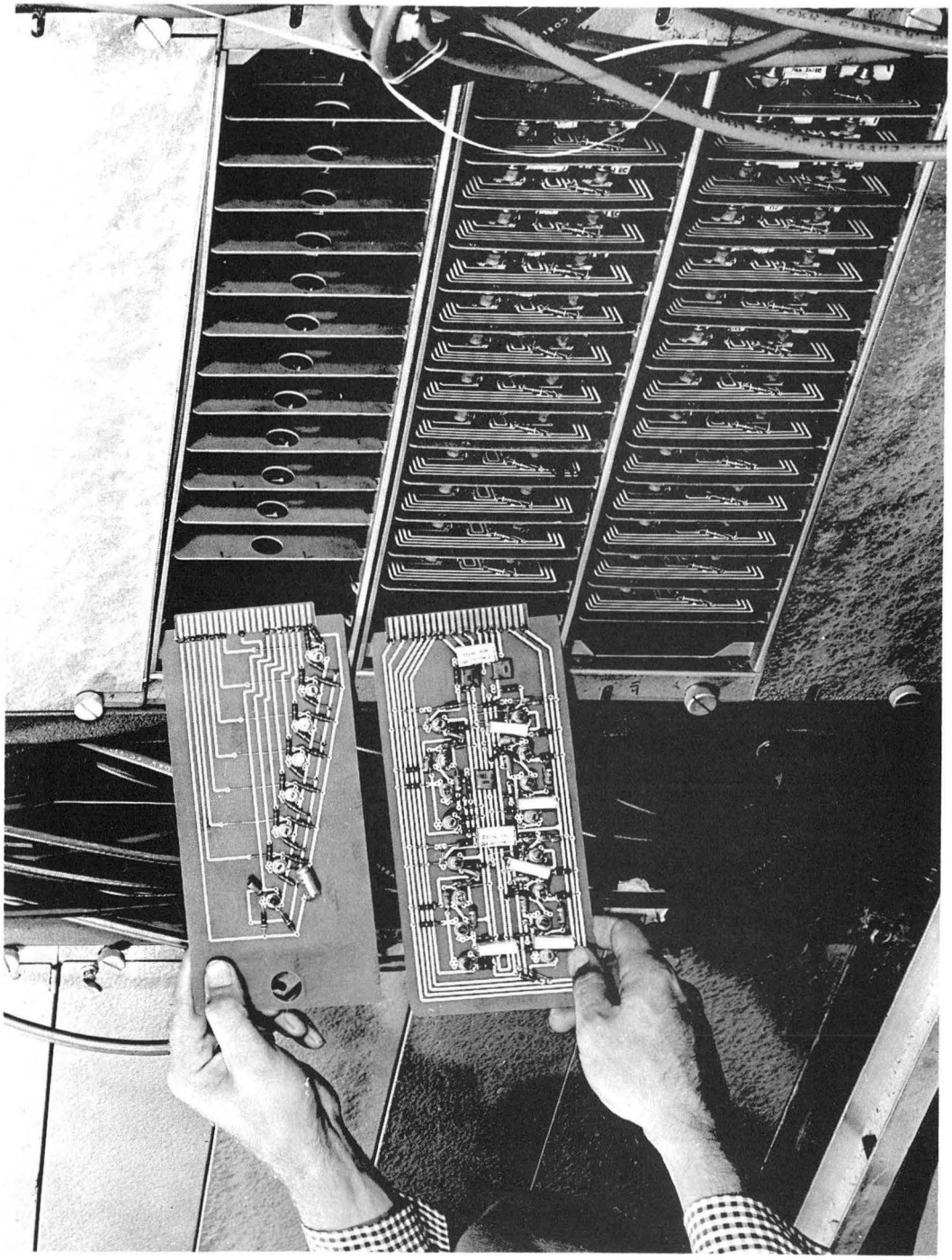

ZN-2626

Fig. 5. Typical printed-circuit boards about to be inserted into bins.

identical circuits. The boards were contained in bins having a capacity of 14 boards each. The three bins visible in the photograph contained 52 boards of two types of circuits. Several identical circuits were grouped on each printed board whenever possible in this system. It was usually possible to rectify the effects of trouble on a particular board by replacing it with a pretested spare board. System "down-time" was greatly reduced in this way.

Approximately four-thousand transistors were used in this system. The operational time to date has been too short to obtain good figures for the reliability of the transistors and cirucits. However, since the usual circuit defects were remedied, the results have been gratifying. As an example, the buffer store, which uses about 2000 transistors, operated 24 hr a day for 1 month without a circuit or transistor failure.

## REFERENCES

1. Clyde Wiegand, "Handling of Counter Data," presented at the International Conference on High Energy Physics Instrumentation, Berkeley, California, September 1960; Lawrence Radiation Laboratory Report UCRL-9343 (in press).
2. Stanley C. Baker, "A Transistor Coincidence-Discriminator Circuit for $10^{-8}$-Second Pulses," Lawrence Radiation Laboratory Report, UCRL-9272, November 1960.
3. A.E. Bjerke, Q.A. Kerns, and T.A. Nunamaker, "A Solid-State Chronotron for Digitizing Time Delays," Lawrence Radiation Laboratory Report UCRL-9270, December 1960.
4. F. Evans and F.A. Kirsten, "An 1800-Bit Buffer Store and Readout System," Lawrence Radiation Laboratory Report UCRL-9274, December 1960.
5. Q.A. Kerns and G.C. Cox, "A Nanosecond Triggered Light Source Using Field Emission," Lawrence Radiation Laboratory Report UCRL-9269, October 1960.
6. S.C. Baker, Q.A. Kerns, F.A. Kirsten, D.A. Mack, and T.A. Nunamaker, "Test Routines and Monitoring," Lawrence Radiation Laboratory Report UCRL-9273, December 1960.

This report was prepared as an account of Government sponsored work. Neither the United States, nor the Commission, nor any person acting on behalf of the Commission:

A. Makes any warranty or representation, expressed or implied, with respect to the accuracy, completeness, or usefulness of the information contained in this report, or that the use of any information, apparatus, method, or process disclosed in this report may not infringe privately owned rights; or

B. Assumes any liabilities with respect to the use of, or for damages resulting from the use of any information, apparatus, method, or process disclosed in this report.

As used in the above, "person acting on behalf of the Commission" includes any employee or contractor of the Commission, or employee of such contractor, to the extent that such employee or contractor of the Commission, or employee of such contractor prepares, disseminates, or provides access to, any information pursuant to his employment or contract with the Commission, or his employment with such contractor.