UCRL 9276

UNIVERSITY OF CALIFORNIA

Ernest O. Lawrence Radiation Laboratory

BERKELEY, CALIFORNIA

DISCLAIMER

This document was prepared as an account of work sponsored by the United States Government. While this document is believed to contain correct information, neither the United States Government nor any agency thereof, nor the Regents of the University of California, nor any of their employees, makes any warranty, express or implied, or assumes any legal responsibility for the accuracy, completeness, or usefulness of any information, apparatus, product, or process disclosed, or represents that its use would not infringe privately owned rights. Reference herein to any specific commercial product, process, or service by its trade name, trademark, manufacturer, or otherwise, does not necessarily constitute or imply its endorsement, recommendation, or favoring by the United States Government or any agency thereof, or the Regents of the University of California. The views and opinions of authors expressed herein do not necessarily state or reflect those of the United States Government or any agency thereof or the Regents of the University of California.

For Publ. in Phys. Rev. only

UCRL-9276

UNIVERSITY OF CALIFORNIA

Lawrence Radiation Laboratory
Berkeley, California

Contract No. W-7405-eng-48

GAMMA RAY ANISOTROPIES FROM ORIENTED Pm^{144}

D. A. Shirley, J. F. Schooley, and J. O. Rasmussen

July, 1960

GAMMA RAY ANISOTROPIES FROM ORIENTED Pm^{144}*

D. A. Shirley, J. F. Schooley,† and J. O. Rasmussen

Lawrence Radiation Laboratory and Department of Chemistry
University of California, Berkeley, California

July, 1960

ABSTRACT

Radioactive Pm^{144} was oriented at low temperatures in a single crystal of neodymium ethylsulfate. The gamma rays at 475, 615, and 695 kev were found to be anisotropic. The results confirm the decay scheme previously proposed as well as crystal field calculations for Pm^{+3} in this lattice. It is not possible to decide between spin 5 and 6 for Pm^{144}. Values were obtained for $|A|/k$ and $|\mu|$ of $0.0091^{\circ}K$ and 1.68 ± 0.14 nm for (I= 5) or $.0079^{\circ}K$ and 1.75 ± 0.14 nm for (I = 6). The lowest doublet of Pm^{+3} was found to be split, presumably due to Jahn-Teller distortion.

*Work performed under the auspices of the United States Atomic Energy Commission.

†Present address: Bureau of Standards, Washington, D. C.

INTRODUCTION

The known isotopes of promethium cover the range from a closed neutron shell at N = 82 into the region where nuclei exhibit collective rotational behavior. Because there are no stable isotopes, relatively little is known about the atomic spectroscopy, and hence the hyperfine structure, of this element. Tripositive Pm^{+3} has the configuration $4f^4$ and, according to Hund's rules, the ground term should be $^5I_4$. Using the theory of Elliott and Stevens[1] with crystal field parameters interpolated from other rare earth ethylsulfates, it can be predicted that the ground state of Pm^{+3} in the ethylsulfate lattice is a doublet composed of an admixture of $|J_z = \pm 4>$ and $|J_z = \mp 2>$. If the hyperfine structure is large enough, the sensitive techniques of low-temperature nuclear orientation can be employed to study the nuclear properties of promethium. Ofer,[2] and Toth and Nielson[3] have studied the 300-day electron capture isotope, Pm^{144}, and the nuclear level scheme of Nd^{144} has been established. In the present work promethium-144 was aligned and polarized in a crystal of neodymium ethylsulfate.

EXPERIMENTAL

Promethium-144 was made by bombarding a thick target of Pr^{141} with 20-Mev helium ions in the Berkeley 60-inch cyclotron. The promethium was separated from the praseodymium by elution of the tripositive ions with 0.4M alpha hydroxyisobutyric acid adjusted to pH ~ 4.0 from a Dowex 50 cation exchange column.[4] About 10 μc of Pm^{144} activity were grown into a 5-g single crystal of $Nd(C_2H_5SO_4)_3 \cdot 9H_2O$. The crystal was mounted on a 2-mm glass rod to which a thermal guard of compressed $MnSO_4 \cdot (NH_4)_2SO_4 \cdot 24\ H_2O$ was attached, and the whole assembly was placed in a demagnetization cryostat and cooled to 1.1°K by contact with liquid helium. The magnetic field used in cooling the

crystal by adiabatic demagnetization was applied parallel to the crystalline c-axis. In order to obtain the temperature dependence of the anisotropies, the crystal was demagnetized from various magnetic field strengths. Thus, the counting could be done immediately following demagnetization, minimizing errors caused by inhomogeneous warming of the crystal. During each counting period the absolute temperature changed by no more than 1%.

The temperature of the crystal was measured through its paramagnetic susceptibility by means of an a c mutual inductance bridge. This "magnetic temperature" was corrected to absolute temperature using the data of H. Meyer[5] and an appropriate demagnetization correction.

The gamma radiation was detected by 3 x 3-in. cylindrical Na(Tl) crystals with a 100-channel differential pulse-height analyzer. The sequence followed during most runs was (1) demagnetization, (2) immediate gamma counting for a short period of time (generally five minutes), simultaneously determining the magnetic temperature of the crystal, (3) warming the crystal to the temperature of the liquid helium reservoir by admitting helium gas to the cryostat, and (4) counting of the now isotropic gamma radiation for the same period as before. Although warming of the crystal by stray heat leaks was slight, a check on the possibility of inhomogeneous warming was made by determining the anisotropy in successive counting periods of one minute and of twenty-five minutes duration. The anisotropy was the same in each case. Additional important information was gained by making anisotropy measurements on the magnetically-cooled crystal while a small polarizing field was applied along the c-axis, using a battery-powered iron-free magnet. Fields of 100, 200, and 400 gauss were used in these polarization measurements. Finally, the experiment was repeated using a second crystal, and consistent results were obtained.

RESULTS

The gamma-ray spectrum of Pm^{144} consists of three gamma rays of similar intensities and of energies 475, 615, and 695 kev. Pulse-height analysis of the spectrum with a 100-channel analuzer (Fig. 1) permitted the anisotropies of the individual gamma rays to be determined simultaneously allowing direct comparison among them. It was found that the anisotropies $\epsilon \left(= \frac{W(90^\circ) - W(0)}{W(90^\circ)} \right)$ of the 615- and 695-kev gamma rays were identical, while that of the 475-kev gamma ray was about 20% less. The temperature dependence of the anisotropy of the two higher energy gamma rays is shown in Fig. 2. The square root of the anisotropy is plotted against the reciprocal of the absolute temperature to show that the anisotropy is very nearly a linear function of $(1/T)^2$.

Fig. 3 shows the anisotropy as a function of the angle between the crystalline c-axis and the direction of progagation at the lowest temperature. The uncertainties indicated for the data points plotted in Figs. 1, 2, and 3 are just those due to the statistical error in each count. In each case any necessary corrections have been made for background, finite source and counter size, drift in the scintillation spectrometer energy calibration, and change in block time of the 100-channel pulse-height analyzer. The uncertainty in the corrections was much less than the statistical error, and the corrections were never more than 1% of the total counting rate.

DISCUSSION

The relevant spin Hamiltonain[6] for Pm^{+3} is

$$H = g_{\parallel}\beta H_z S_z + A S_z I_z + \Delta_x S_x + \Delta_y S_y + P[I_z^2 - (1/3)I(I+1)] + cS_z(S_{1z} + S_{2z}), \quad (1)$$

where the last term represents dipole-dipole interaction with the nearest neighbor neodymium ions and the other terms have their usual significance.

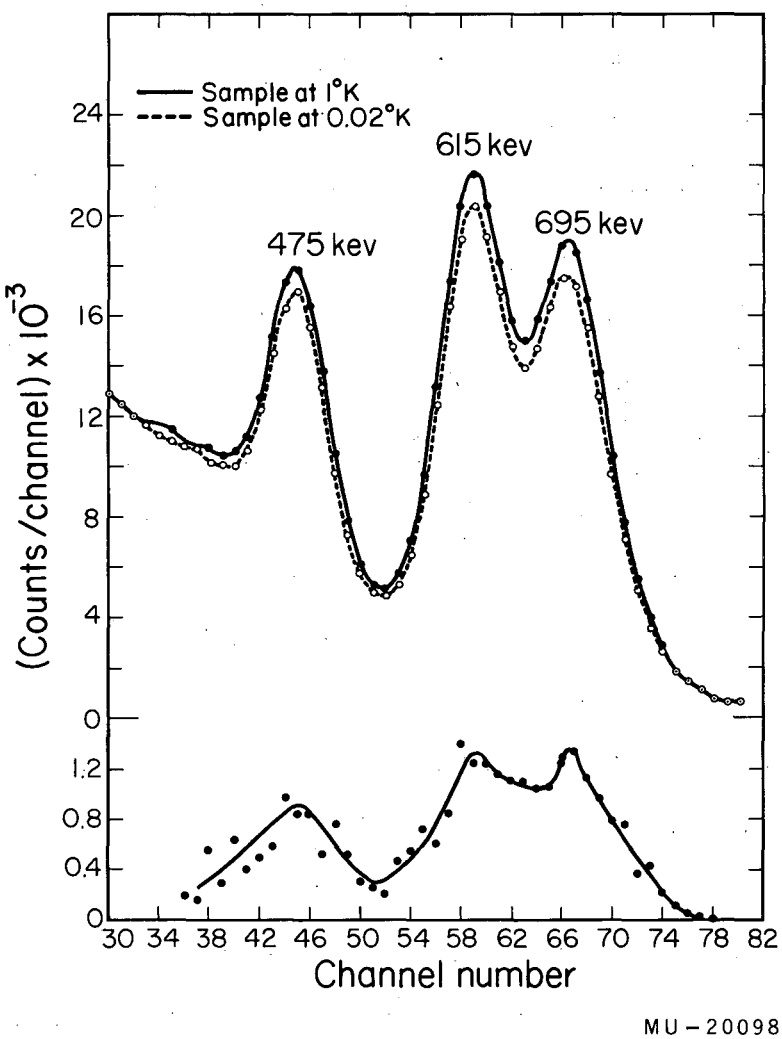

Fig. 1. Gamma-ray spectrum of Pm^{144} taken during a typical run. The counter was placed along the crystalline c axis. The lower curve is a plot of the difference between "warm" and "cold" counting rates.

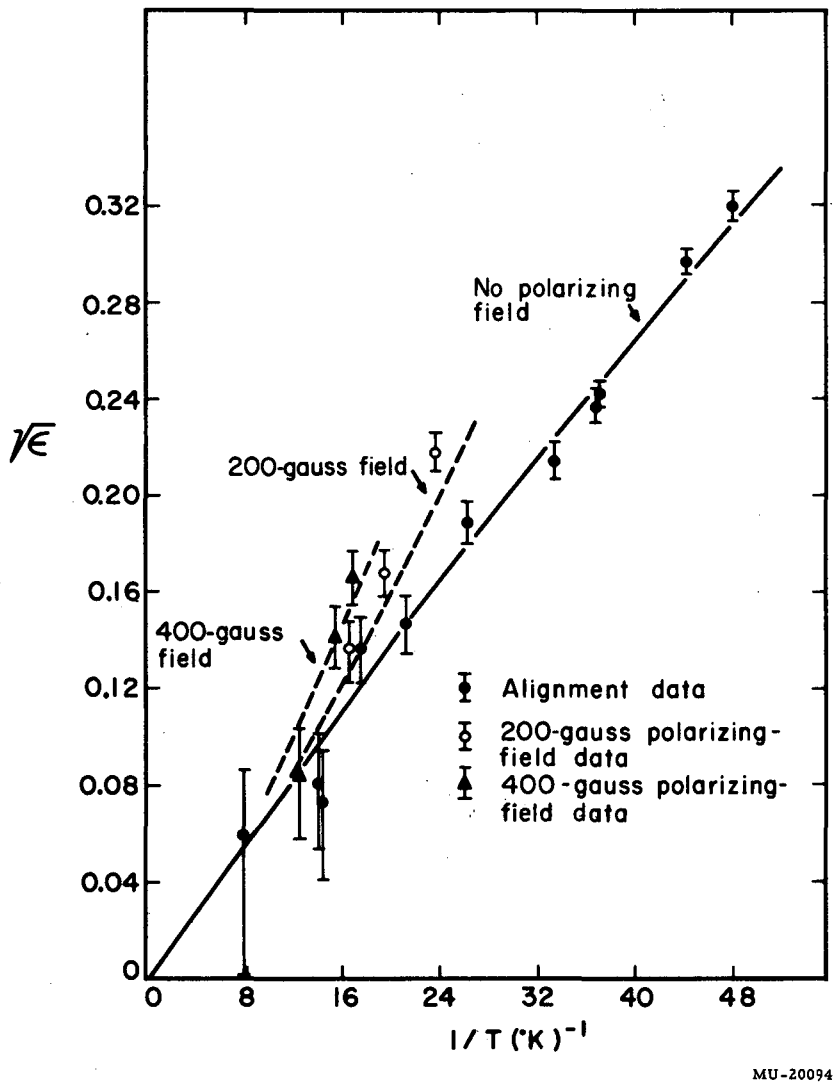

Fig. 2. Temperature dependence of anisotropy of the two higher energy gamma-rays. Error flags represent rms statistical errors.

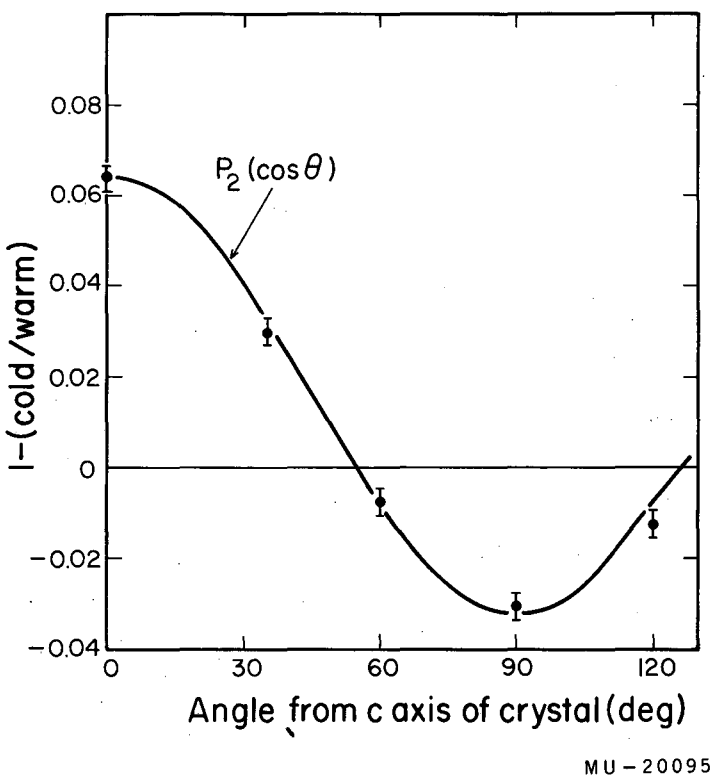

Fig. 3. Angular distribution of the two higher energy gamma rays at 0.02°K.

For a quadrupole moment of ~.5 barn, estimated from nuclear systematics, P is easily shown to be negligible on the theory of Elliott and Stevens, and may be neglected. Using this theory and interpolated[7] crystal field parameters with estimated limits of error $A_2^o\overline{r^2} = (60 \pm 10)\ cm^{-1}$, $A_4^o\overline{r^4} = -(80\pm10)cm^{-1}$, $A_6^o\overline{r^6} = -(40 \pm 10)\ cm^{-1}$, and $A_6^6\overline{r^6} = (600 \pm 20)cm^{-1}$, the ground state is calculated to be $-63\ |J_z = \pm 4\rangle \pm .78|J_z = \pm 2\rangle$, with $g_{\|} = .47 \pm .04$, and $A/k = (.027 \pm .002)|\mu|/I$. Here μ and I are the nuclear magnetic moment and spin, respectively, and the off-diagonal terms $(\Delta_x S_x + \Delta_y S_y)$ are due to the Jahn-Teller distortion effect,[6] and they tend to decrease the nuclear orientation. These terms split the lowest doublet and cause the hyperfine structure splitting to be unequally spaced. In the limit of $A \ll \Delta$ the energies of the hyperfine structure levels are proportional to I_z^2 rather than as I_z as in the case $\Delta = 0$. It is easily shown[8] that the nuclear alignment parameter B_2 is unaffected by application of an external magnetic field along the crystalline c-axis in the absence of off-diagonal terms in the Hamiltonian. In the presence of a Jahn-Teller interaction, however, the alignment can be substantially increased, with a consequent enhancement of the gamma-ray anisotropy,[9] on application of a magnetic field along the c-axis.

The term in c is introduced to account for spin-spin interactions between the promethium ion and the two nearest neighbor neodymium ions which lie at d = 7.07 Å in either direction along the c-axis. The six next nearest neighbors lie at angles giving rise to negligible spin-spin interaction. S_{1z} and S_{2z} are the effective electronic spin projections of these neodymium ions (taken as ± 1/2 according to "spin Hamiltonian" convention), and $c = -2\ g_{\|}(Pm)g_{\|}(Nd)\beta^2/d^3$. The value of c can be calculated from existing data[10,11] and the value of $g_{\|}(Pm)$ derived earlier in this paper. The value of c/k used in all our calculations is .0056°K.

Using the above Hamiltonian, and neglecting P, the energies of the $2^3(2I + 1)$ hyperfine states of the lowest doublet ($5+ = \pm 1/2$) are given by the formula

$$E(S_z S_{1z} S_{2z} I_z) = S_z \left\{ \Delta^2 + [g_{\parallel} \beta H_z + AI_z + c(S_{1z} + S_{2z})]^2 \right\}^{1/2} \quad (2)$$

where $\Delta^2 = \Delta_x^2 + \Delta_y^2$. The effects of the various terms governing the level spacing are illustrated in Fig. 4.

The gamma-ray intensity in this type of experiment depends on both the temperature of the crystal and the angle θ between the direction of propagation and the crystalline c-axis. Thus it is always necessary to separate these functional dependences experimentally before the maximum information can be obtained from such an experiment. The procedure employed in this laboratory is described below. First it is noted that in most nuclear alignment experiments the angular distribution of gamma radiation is given by the expression

$$W(\theta) = 1 + B_2 U_2 F_2 P_2 (\cos \theta) + B_4 U_4 F_4 P_4 (\cos \theta).$$

The parameters B_ν, U_ν, and F_ν are described elsewhere,[12] and P_ν is the Legendre polynomial of order ν. The important point here is that the entire dependences on T and θ are contained in B_ν and P_ν, respectively. The experimental procedure is the following: (1) Measure the complete angular distribution at the lowest temperature attainable, where the relative contribution of the term in B_4 is expected to be greatest, (2) calculate from these data the approximate magnitudes of the B_2 and B_4 terms at all temperatures, and (3) measure the temperature dependence of $W(\theta)$. If, as is often the case, the B_4 term is negligible even at the lowest attainable temperature, then the angular distribution goes as P_2 (cos θ) at all higher temperatures and need not be studied as extensively at these temperatures.

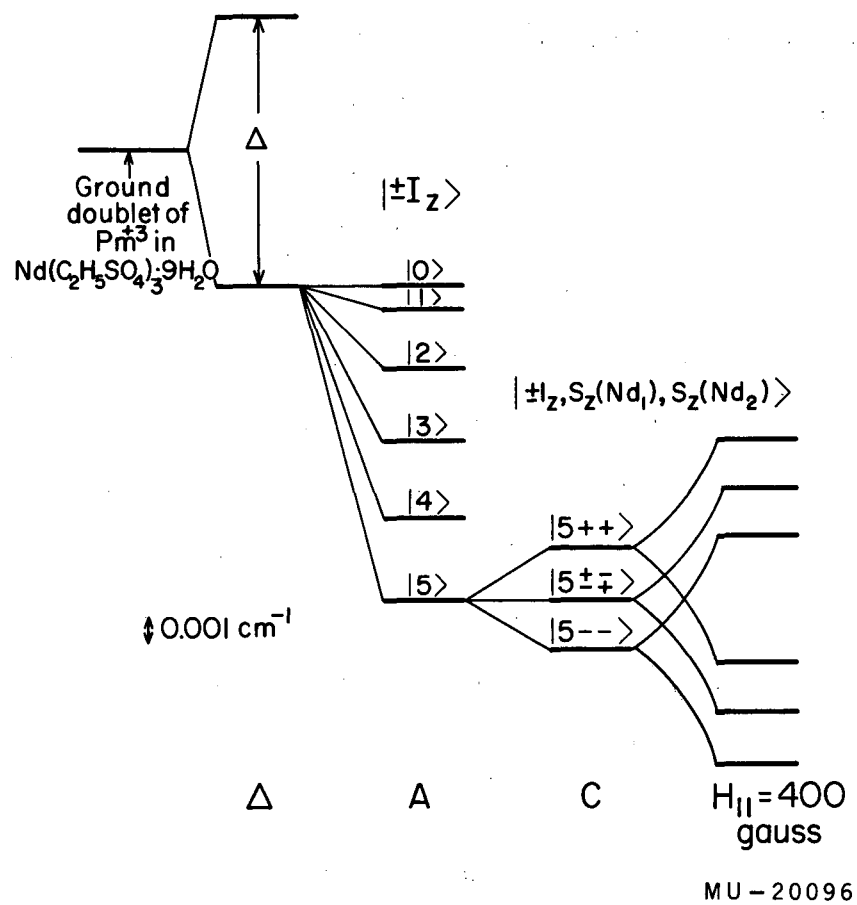

Fig. 4. Partial energy level diagram of Pm^{144} in neodymium ethylsulfate, showing the effect of each term in the spin Hamiltonian.

In the present experiment it was found that the term in P_2 (cos θ) provided an adequate description of the angular distribution at the lowest temperature (Fig. 3).

It is clear from the form of the spin Hamiltonian that states of maximum $|I_z|$ lie lowest. Thus the signs of the anisotropies are meaningful for establishing the signs of the F_2 coefficients. Then from the signs and relative magnitudes of the anisotropies alone it is possible to confirm substantially the level scheme of Nd^{144} proposed by Ofer[2] (Fig. 5). The spins of the ground state and first excited states are well established as 0+ and 2+ because the nucleus is even-even and the 695-kev transition is E2. The sign of the anisotropy of the 695-kev gamma ray also supports these assignments.

The sign and relative magnitude of the anisotropy of the 615-kev E2 gamma ray proceeding from the 1.31-Mev level definitely rules out all spin assignments other than 3+ or 4+ for this level. Spins of 1+ or 2+ would require $F_2 > 0$ contrary to experiment for both the 615- and the 695-kev transitions, and a spin of 0+ would of course allow no anisotropy. Ofer obtained an unambiguous assignment of 4+ for this level.

Interpretation of the anisotropy of the 475-kev gamma ray is less straightforward because the unobserved preceding electron capture transition affects this anisotropy in a different way than those of the other gamma rays. The observed anisotropy is 20% less than that of the other two gamma rays, and the only plausible explanations seem to be (a) the 1780-kev level has a lifetime of the order of 10^{-9} seconds and the changing extranuclear fields following electron capture decay attenuate the correlation by a factor $G_2 \cong 0.7$, or (b) a considerable fraction of the decay to the 1780 kev level is of the L = 2 type, thus reducing the alignment in this state substantially. If (b) is

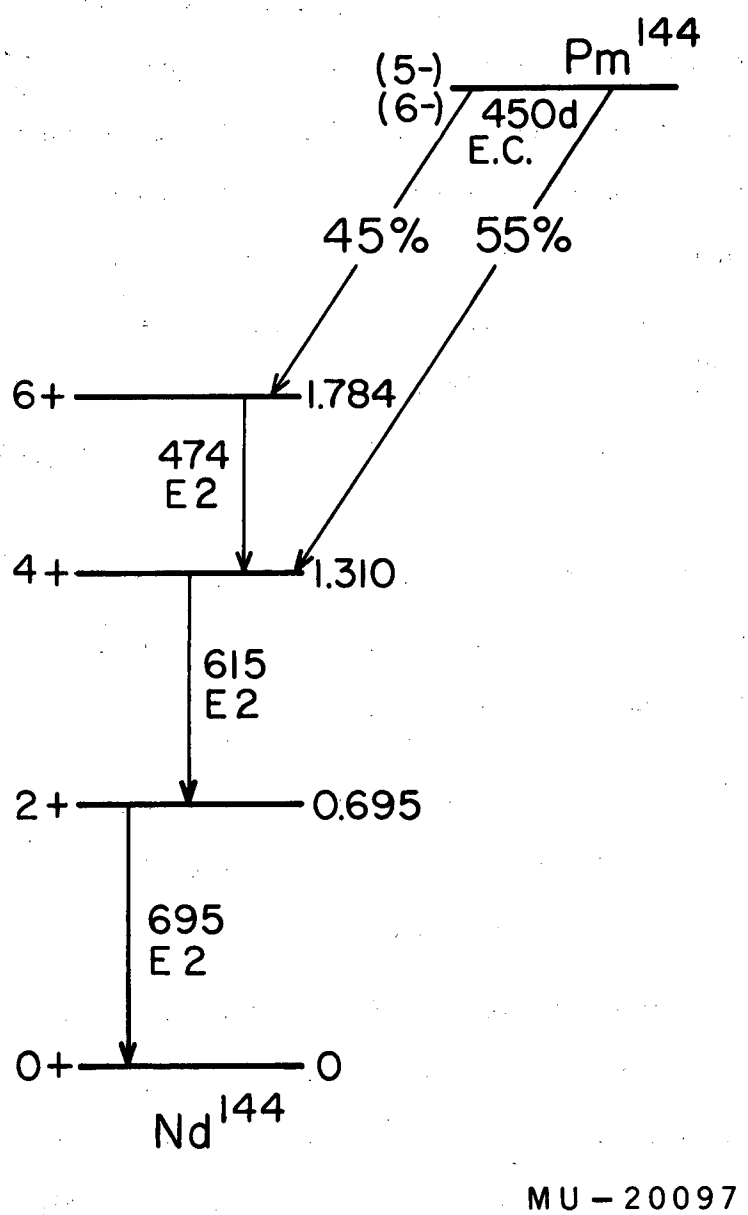

Fig. 5. Decay scheme of Pm^{144}.

correct, the sequence $5 \xrightarrow{L = 2} 6$ for the electron capture decay to the 1780 kev state would fit the alignment data quantitatively. Regardless of this ambiguity, the anisotropy definitely excludes all possible spins other than 6+ and 2+, in support of Ofer, who obtained an unambiguous assignment of 6+.

The existence of a Jahn-Teller distortion is established by an increased anisotropy in the presence of an external axial magnetic field. The accuracy of the temperature measurement in the field, which involves a 10% saturation correction, was checked by observing the anisotropies of gamma rays following the decay of Nd^{147} in the same lattice in several fields. The effect of magnetic fields on this anisotropy is readily calculated, and good agreement was obtained.

The anisotropy data were fitted using the Hamiltonian (equation 1) and the decay scheme proposed by Ofer[2] (Fig. 5). The value of A depends on which spin is assumed for Pm^{144}. The results are

$$|A|/k = (0.0091 \pm .0003)^{\circ}K, \text{ for } I = 5$$

or

$$|A|/k = (0.0079 \pm .0003)^{\circ}K, \text{ for } I = 6$$

$$\Delta/k = (0.020 \pm .010)^{\circ}K.$$

The nuclear magnetic moment of Pm^{144} may be calculated from A using the theory of Elliott and Stevens and the value of $\langle 1/r^3 \rangle = 36.8 \times 10^{24}$ cm^{-3}.[13] The result is $|\mu| = 1.68 \pm 0.14$ nm for I = 5 or $|\mu| = 1.75 \pm 0.14$ nm for I = 6.

The error in the calculated value of $|\mu|$ is principally due to considerable uncertainty in the estimation of the crystal field parameters. Since A is proportional to $g_{\parallel}$, a direct determination of $g_{\parallel}$ for any promethium isotope in the ethylsulfate lattice by paramagnetic resonance would be very desirable. The present experiment verifies the approximate value $g_{\parallel} \cong .47$ and the finite value of Δ suggests that the transition probabilities for resonance should not be too small.

Shell-model considerations suggest that the odd neutron is in an $f_{7/2}$ orbital and that the odd proton is in either a $d_{5/2}$ or a $g_{7/2}$ state. The magnetic moments expected on the simple vector-coupling model are listed in Table I.

TABLE I

Magnetic moments of Pm^{144}.

Proton state	I	μ_{theo}
$d_{5/2}$	5	2.85
$d_{5/2}$ ——————>	6	<—————— 2.25
$g_{7/2}$	5	-0.138
$g_{7/2}$	6	-0.165

Thus the $d_{5/2}$ proton state is favored, although a strong admixture of $g_{7/2}$ is likely in view of the proximity of these two states in the heavier odd isotopes of promethium.[14]

ACKNOWLEDGMENTS

We wish to thank Dr. Brian R. Judd for several helpful discussions and for communication of the value of $\langle 1/r^3 \rangle$ for Pm^{+3}, G. A. Westenbarger for assistance with the measurements on Nd^{147}, and Mrs. Mab Tocher for assistance with preparation of the source.

REFERENCES

1. R. S. Elliott and K. W. H. Stevens, Proc. Roy. Soc. (London) A218, 553 (1953).
2. S. Ofer, Phys. Rev. 113, 895 (1959).
3. K. S. Toth and O. B. Nielson, Phys. Rev. 115, 1004 (1959).
4. S. G. Thompson et al., J. Am. Chem. Soc. 76, 6229 (1954).
5. Horst Meyer, Phil. Mag. 2, 521 (1957).
6. J. M. Baker and B. Bleaney, Proc. Roy. Soc. (London) A245, 156 (1958).
7. B. R. Judd, Proc. Roy. Soc. (London) A251, 407 (1959).
8. J. M. Daniels, Proc. Phys. Soc. (London) A66, 673 (1953).
9. M. A. Grace, C. E. Johnson, R. G. Scurlock, and R. T. Taylor, Phil. Mag., 3, 456 (1958).
10. K. D. Bowers and J. Owen, Repts. Progr. in Phys. 18, 304 (1955).
11. J. A. A. Ketelaar, Physica 4, 619 (1937).
12. R. J. Blin-Stoyle and M. A. Grace, Handbuch der Physik 42, 555 (1957).
13. B. R. Judd and I. P. K. Lindgren, Theory of Zeeman Effects in the Ground Multiplets of Rare Earth Atoms, UCRL-9188, April 25, 1960.
14. Nuclear Data Sheets, NRC 58-11-74 (1958).

This report was prepared as an account of Government sponsored work. Neither the United States, nor the Commission, nor any person acting on behalf of the Commission:

A. Makes any warranty or representation, expressed or implied, with respect to the accuracy, completeness, or usefulness of the information contained in this report, or that the use of any information, apparatus, method, or process disclosed in this report may not infringe privately owned rights; or

B. Assumes any liabilities with respect to the use of, or for damages resulting from the use of any information, apparatus, method, or process disclosed in this report.

As used in the above, "person acting on behalf of the Commission" includes any employee or contractor of the Commission, or employee of such contractor, to the extent that such employee or contractor of the Commission, or employee of such contractor prepares, disseminates, or provides access to, any information pursuant to his employment or contract with the Commission, or his employment with such contractor.