UCRL -9298

UNIVERSITY OF CALIFORNIA

Ernest O. Lawrence Radiation Laboratory

TWO-WEEK LOAN COPY

This is a Library Circulating Copy
which may be borrowed for two weeks.
For a personal retention copy, call
Tech. Info. Division, Ext. 5545

BERKELEY, CALIFORNIA

DISCLAIMER

This document was prepared as an account of work sponsored by the United States Government. While this document is believed to contain correct information, neither the United States Government nor any agency thereof, nor the Regents of the University of California, nor any of their employees, makes any warranty, express or implied, or assumes any legal responsibility for the accuracy, completeness, or usefulness of any information, apparatus, product, or process disclosed, or represents that its use would not infringe privately owned rights. Reference herein to any specific commercial product, process, or service by its trade name, trademark, manufacturer, or otherwise, does not necessarily constitute or imply its endorsement, recommendation, or favoring by the United States Government or any agency thereof, or the Regents of the University of California. The views and opinions of authors expressed herein do not necessarily state or reflect those of the United States Government or any agency thereof or the Regents of the University of California.

For Publ. in RSI Non-Std.

UCRL-9298

UNIVERSITY OF CALIFORNIA

Lawrence Radiation Laboratory
Berkeley, California

Contract No. W-7405-eng-48

USE OF PYROELECTRIC DEVICES FOR MEASURING SMALL TEMPERATURE CHANGES

Sidney B. Lang

July, 1960

USE OF PYROELECTRIC DEVICES FOR MEASURING SMALL TEMPERATURE CHANGES

Sidney B. Lang

Lawrence Radiation Laboratory and Department of Chemical Engineering

University of California
Berkeley, California

July, 1960

ABSTRACT

A technique for measuring extremely small temperature changes by means of a pyroelectric device is described. The sensing element is a short, thin rod of polarized barium titanate ceramic with electrodes on the ends. The electric charges produced by changes in temperature are measured by a vibrating-reed electrometer. The device is sensitive to temperature changes as small as 2×10^{-7} °C, and modifications can be made to achieve much greater sensitivity. The device is extremely free of ordinary thermometric errors. A number of calorimetric and noncalorimetric applications for the device are suggested.

INTRODUCTION

Pyroelectricity is the manifestation of the temperature dependence of the spontaneous polarization of certain anisotropic solids. If a piece of pyroelectric material is held at a constant temperature for a period of time, it becomes electrically neutral, due both to the acquisition of free electric charges from the surrounding media by its surface and to internal conduction of free charges. If the temperature of the material is raised a small amount, the material becomes electrically polarized. Conversely, if the temperature of the material is lowered by the same amount, the magnitude of the polarization is the same, but the direction of polarization is reversed.

The phenomenon of pyroelectricity was first observed in Europe in 1703 by Dutch traders who had acquired tourmaline crystals in Ceylon for gemstones. The traders noticed that the tourmaline, when placed in a fire, first attracted ashes and then repelled them. Pyroelectricity and its sister phenomenon, piezoelectricity (polarization due to mechanical stress), have been studied extensively.[1] Piezoelectricity saw its first practical use during World War I in Langevin's studies on the detection of underwater objects. Since then, piezoelectricity has found myriads of uses in transducers and in crystal resonators. Pyroelectricity, on the other hand, has not fared as well. Aside from its recent use as a nondestructive means of measuring the polarization of ferroelectric materials,[2] it has remained a laboratory curiosity.

This work proposes a means for using pyroelectric devices to measure extremely small changes in temperature. The change in the polarization of the device is measured by a dynamic condenser electrometer. The sources of error in the system are analyzed, and the pyroelectric device is compared with other temperature-measuring devices. Finally, possible calorimetric and noncalorimetric applications for such a device are discussed.

---

[1] Walter G. Cady, Piezoelectricity, (McGraw-Hill Book Company, New York, 1946).

[2] A. G. Chynoweth, J. Appl. Phys. 27, 78 (1956).

OCCURRENCE AND CAUSE OF PYROELECTRICITY

It can be shown from the tensor equations describing pyroelectricity and piezoelectricity that of the 32 crystal classes only 10 lack enough elements of symmetry to be pyroelectric.[3] These 10 classes both lack a center of symmetry and have a single, unique polar axis. The mineral tourmaline is the oldest and, until recently, the best-known example of a pyroelectric material. But lately, a new class of solid materials has been studied which exhibits pyroelectricity only within definite temperature limits. These are the ferroelectric materials--materials which are spontaneously polarized within temperature limits known as Curie points and whose direction of polarization can be reversed by the application of a strong electric field.

Three general classes of ferroelectrics, based on differences in interatomic bonding, are recognized. Rochelle salt and potassium dihydrogen phosphate are typical representatives of the first two classes. The third and most important class contains materials having a perovskite structure, the most important representative being barium titanate. At temperatures above 120°C, barium titanate has a cubic structure and is not polarized. Below the 120°C Curie point, the structure of barium titanate changes to tetragonal and the material becomes spontaneously polarized. If the barium titanate is cooled below its Curie point in the absence of an electric field, it exhibits random domain structure and has little or no net polarization. However, if barium titanate ceramic is cooled through its Curie point while being subjected to a very intense electric field, sufficient domains are oriented in the same direction to give a strong net spontaneous polarization. This polarization is permanent and can be removed only by either raising the temperature of the barium titanate above its Curie point or by subjecting the material to an extremely strong reverse electric field at lower temperatures. Because of their widespread use as ultrasonic transducers, polarized barium titanate ceramics are commercially available in a variety of shapes and sizes.

---

[3] Warren P. Mason, Piezoelectric Crystals and Their Applications to Ultrasonics (Van Nostrand, New York, 1950).

TEMPERATURE-CHANGE MEASUREMENT

The discussion of the use of pyroelectric devices for measuring extremely small changes in temperature is based upon the use of polarized barium titanate ceramic as the pyroelectric material. This choice was made because barium titanate ceramic is one of the most intensely pyroelectric materials of those thus far described in the literature. Barium titanate becomes unsuitable for temperature-change measurements above 100°C, and other materials must then be used (as described below).

The barium titanate ceramic discussed has the physical properties listed in Table I. In this section of the paper, a temperature-sensing device having the shape of a disk as shown in Fig. 1(a) is described. The disk is cut from ceramic so that the direction of polarization is normal to the flat surfaces. It has a cross-sectional area of 1 cm^2 and a thickness of 1 mm. Silver electrodes are deposited on the flat surfaces and electrical leads are attached to the electrodes.

TABLE I

Properties of barium titanate ceramic

Property	Value (at 25° C)
Density	5.3 g/cm^3
Relative dielectric constant	1200
Resistivity	10^{14} ohm cm
Thermal conductivity	2.5×10^{-3} cal cm/sec °C cm^2
Heat capacity [a]	0.12 cal/g °C

[a] A. G. Chynoweth, J. Appl. Phys. 27, 78 (1956). Other physical properties from Gulton Industries, Inc. Bulletin X-103.

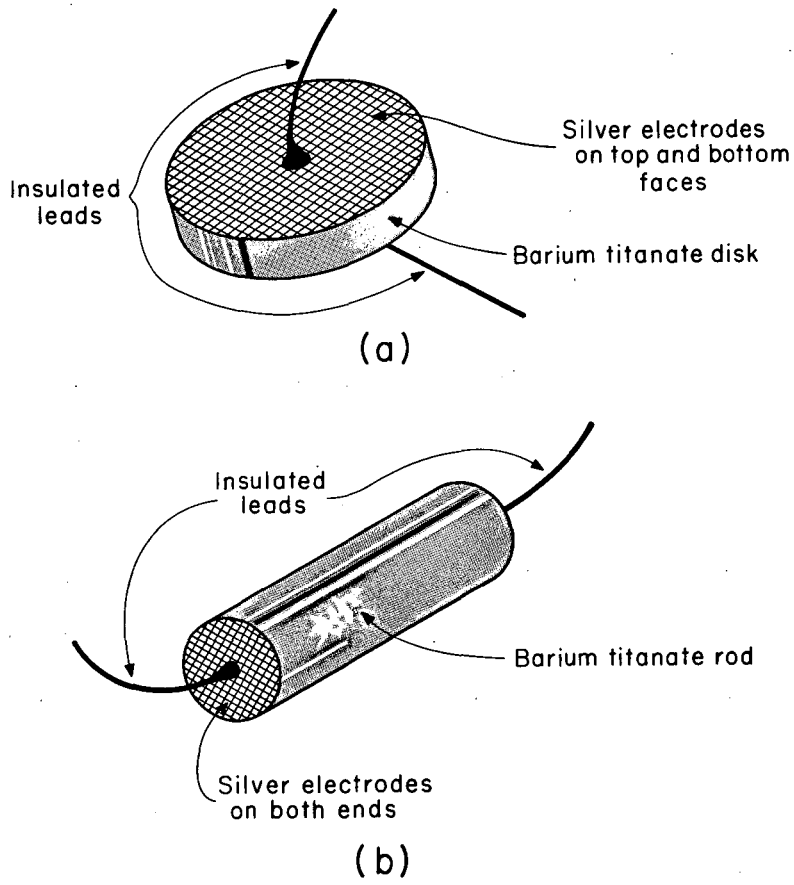

Fig. 1. Pyroelectric devices for sensing temperature change. Barium titanate ceramic polarized in direction normal to electrode surfaces.
(a) Disk is 1 mm thick and 1 cm^2 in cross section.
(b) Rod is 1.03 cm long and 0.0973 cm^2 in cross section.

Examine the temperature behavior of this disk. Under the conditions of constant applied stress and electric field, the tensor equations of pyroelectricity and piezoelectricity[3] can be integrated to

$$\frac{\Delta Q}{A} = p \Delta T, \tag{1}$$

where $\Delta Q/A$ is the change in electric charge per unit area in coulomb/cm^2, ΔT is the change in temperature in $^\circ$C, and p is the pyroelectric coefficient in coulomb/cm^2 $^\circ$C. A plot of the absolute value of the pyroelectric coefficient (at zero applied stress) versus temperature is given in Fig. 2. Note that p is relatively constant between -70 and -10° C and between 20 and 60° C. The value of p at 25° C is approximately 2×10^{-8} coulomb/cm^2 $^\circ$C. If the disk is short-circuited at a given temperature and then its temperature is changed 1°C, an electric charge of 2×10^{-8} coulomb is produced upon it. The disk also behaves as a capacitor, and, based on the parallel-plate formula, has a capacitance of 1×10^{-9} farad. From the formula for voltage on a charged capacitor, $E = Q/C$, it is seen that a ΔT of 1°C has produced a voltage across the disk of 20 volts. By contrast, a thermocouple produces a voltage of 20 to 60 microvolts with a 1°C temperature difference between its junctions. At first glance, the pyroelectric device seems to have almost a million times the sensitivity of a thermocouple.

An immediate problem arises in the measurement of this voltage. The voltage is large, but the amount of charge is minute. Further, charge is produced only by a change in temperature. Once the charge is removed, the device is again electrically neutral. A possible method of measuring such a voltage is by means of an electrostatic instrument such as the Hoffman Electrometer. This technique has one serious objection. As is seen below, the primary use for a pyroelectric thermometer is in calorimetry. If a period of time elapses between the moment at which the device is electrically neutral and the moment at which its charge is read, some of the charge may leak through the device itself. The device has a resistance of 10^{13} ohms, which gives an RC time constant of 10^4 seconds. However, 10% of the charge can leak off in 20 minutes, and this error is too large to tolerate in accurate calorimetric work.

The solution to the problem lies in the dynamic condenser electrometer, an instrument which can measure the charges as they are produced on the pyroelectric device. The particular model of a dynamic condenser electrometer

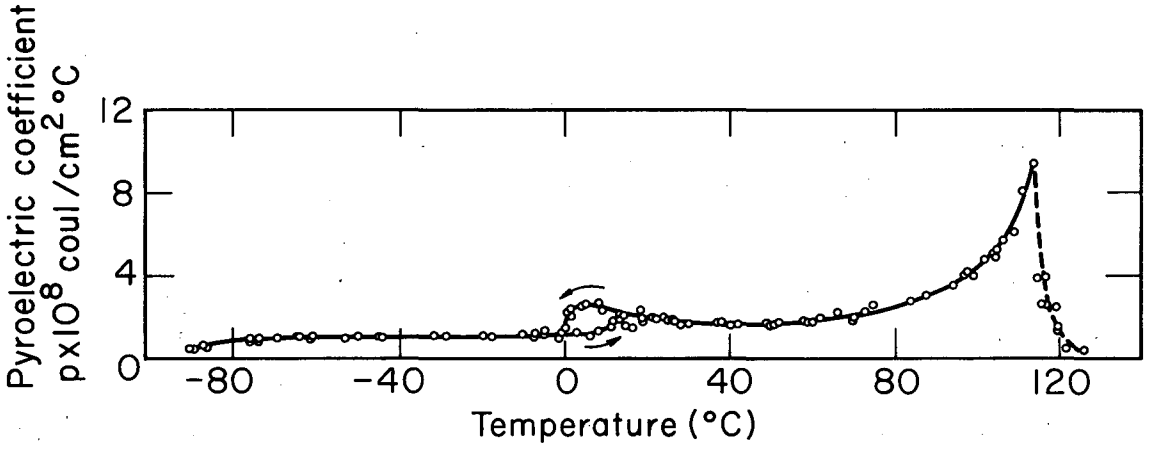

MU-21307

Fig. 2. Absolute value of pyroelectric coefficient p at zero applied stress as a function of temperature for barium titanate ceramic. (From T. A. Perls, T. J. Diesel, and W. I. Dobrov, J. Appl. Phys. 29, 1297 (1958).)

discussed here is the Cary Model 31 Vibrating Reed Electrometer manufactured by the Applied Physics Corporation. This instrument can detect currents of 1×10^{-17} amp, charges of 5×10^{-16} coulomb, and potentials of 2×10^{-5} volt. The electrometer measures small currents by the rate-of-charge method by behaving as such a large capacitor that, during an experiment, insufficient voltage is produced on the electrometer to impede the flow of current in the external circuit. The electrometer converts the small voltage imposed across it to alternating current by means of the vibrating reed so that it may be amplified on an amplifier having a very stable zero. A recorder may be used to give a permanent record of the voltages indicated on the electrometer scale. A circuit can be constructed that will discharge the electrometer capacitors and momentarily short-circuit the external circuit either at the end of a fixed period of time or whenever the voltage as read on the electrometer exceeds a certain value.

The use of a vibrating-reed electrometer in continuously measuring a pyroelectric current can now be investigated. If the electrometer is connected with the pyroelectric disk, an equivalent circuit diagram can be drawn, as shown in Fig. 3. The pyroelectric device behaves as a charge generator in parallel with its own capacitance and resistance. These three elements are connected in parallel with the large effective capacitance of the vibrating-reed electrometer. By means of a rate-of-charge balance on this circuit, one can ascertain the effect of leakage in the device, derive a simple expression for the change in temperature as a function of the voltage on the electrometer, and determine the sensitivity of the pyroelectric device. Charge is produced in the circuit of Fig. 3 at a rate determined by the time derivative of Eq. (1), and distributes itself on the pyroelectric capacitor, the pyroelectric resistance, and the electrometer effective capacitor according to

$$\frac{dQ}{dt} = p\,A\,\frac{dT}{dt} = \frac{dQ_p}{dt} + \frac{E_f}{R_p} + \frac{dQ_E}{dt} \quad . \tag{2}$$

Here dQ_p/dt and dQ_E/dt are the rates of charge accumulation on the pyroelectric device and on the electrometer respectively, and E_f/R_p represents current flow through the device resistance. Because of the negative feedback feature of the electrometer, the amount of charge on the electrometer at a given time is expressed by

$$Q_E = C_v E_v + C_c (E_v + E_f) .$$

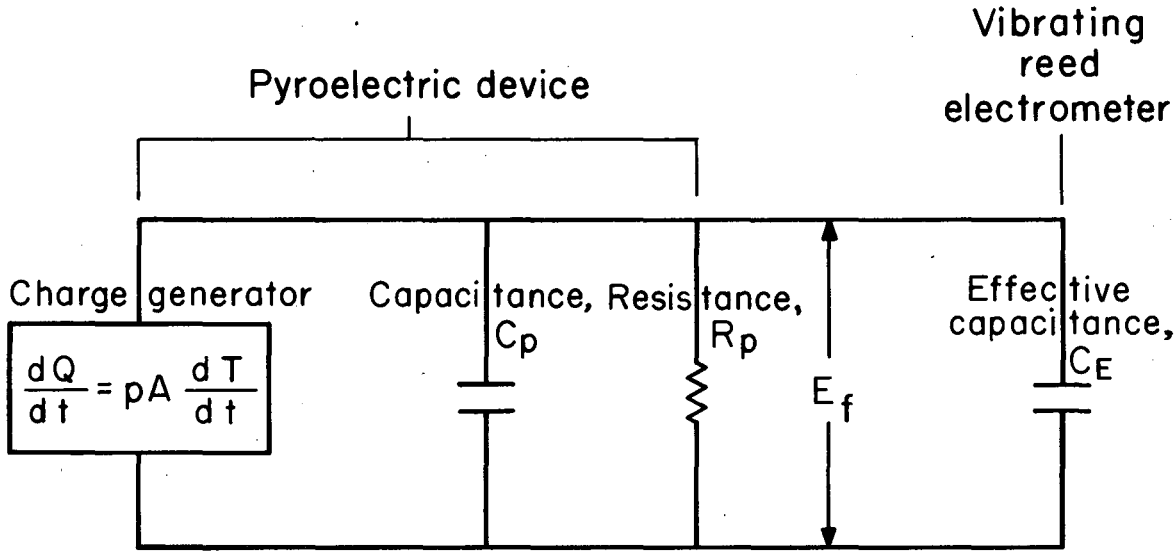

MU-21308

Fig. 3. Equivalent temperature-change measuring circuit.

Here C_v and C_c are the capacitances of the vibrating-reed and the stationary capacitors--25μμf and 10μμf, respectively--and E_v is the voltage across the vibrating-reed capacitor to ground. The voltage read on the electrometer or on the attached recorder, E_f, is higher than the voltage E_v by the multiplying factor G, the over-all amplification of the electrometer,[4] which is about 1000. Making the above substitutions in Eq. (2), one has

$$\psi\, p\, A \frac{dT}{dt} = \phi\, E_f + \frac{dE_f}{dt}\,, \qquad (3)$$

(i) (ii) (iii)

where $$\psi = \frac{1}{\left(\frac{C_v + C_c}{G} + C_c + C_p\right)} \approx 10^9,$$

$$\phi = \frac{\psi}{R_p} \approx 10^{-4}.$$

Here C_p is the capacitance of the pyroelectric device, about 10^{-9} farad. Note that, if E_f can always be kept sufficiently small, Term (ii) of the equation can always be kept much smaller than Term (i), and, thus, Term (ii) can be dropped, creating an error of known magnitude. As mentioned above, the vibrating-reed electrometer circuit can always keep E_f below a certain value by discharging the circuit when E_f reaches a preset value. It can be seen that Term (ii) is always less than 0.1% of Term (i) if the time between discharges is 10 seconds, by inserting the appropriate numerical values in Eqs. (1) and (3). Dropping Term (ii) of Eq. (3) and integrating with respect to time, one has

$$\Delta T = \frac{E_f}{p\psi A}\,, \qquad (4)$$

where ΔT is the temperature change since the time at which E_f was equal to zero (last time of discharge). This derivation has shown that the effect of leakage is negligible if the circuit is discharged periodically. The relation between temperature change and electrometer voltage is given by Eq. (4). If values are inserted for p, A, and ψ, a voltage of 2×10^{-5} volt on the electrometer -- its minimum readable deflection -- corresponds to a temperature change of 1×10^{-6} °C.

---

[4] Cary Model 31 Vibrating Reed Electrometer Instruction Manual (Applied Physics Corporation, Monrovia, California).

In actual use, it will be desirable to calibrate a pyroelectric thermometer because of the difficulty of measuring p and C_p. A platinum resistance thermometer could be used to indicate a small temperature change, say $0.1^{\circ}C$, and the corresponding pyroelectric current produced by the device could be measured. Thus the product $p\,\psi A$ could be determined at desired temperature intervals.

INCREASE IN SENSITIVITY

The sensitivity of the pyroelectric device can be increased greatly in three ways:

1. The shape of the pyroelectric sensing element can be optimized. The denominator of the right-hand side of Eq. (4) can be defined as the sensitivity,

$$\theta = p\psi A = \frac{pA}{\alpha + \frac{\beta KA}{d}} , \tag{5}$$

where $\alpha = \frac{C_v + C_c}{G} + C_c = 1.0035 \times 10^{-11}$

and $\beta = \frac{1}{36\pi} \times 10^{-11}$.

Here β is the constant in the parallel-plate capacitor formula and K is the relative dielectric constant. The sensitivity can be maximized with respect to the electrode area, A, and the thickness, d, by setting $\frac{\partial\theta}{\partial A} = 0$ and $\frac{\partial\theta}{\partial d} = 0$. The optimum values of A, d, and θ are found to be

$$A = \left(\frac{\alpha V}{\beta K}\right)^{1/2} ,$$

$$d = \left(\frac{\beta K V}{\alpha}\right)^{1/2} ,$$

$$\theta = \frac{p}{2}\left(\frac{V}{\alpha\beta K}\right)^{1/2} , \tag{6}$$

where V is the element volume.

A sensing element of barium titanate ceramic having a volume of $0.1\ cm^3$ (the same volume as that of the disc element in Fig. 1(a)) should have an electrode area of $0.0973\ cm^2$ and a length of 1.03 cm. This rod-shaped element, shown in Fig. 1(b), is about five times as sensitive as the disc element and therefore will detect a temperature change of about $2 \times 10^{-7}\ ^{\circ}C$.

2. Materials having a higher pyroelectric coefficient or a lower dielectric constant (or both) can be used as sensing elements. Alternately, pyroelectric devices can be used at temperatures closer to the Curie point where the pyroelectric coefficient is larger, with the disadvantage that the dielectric constant is also larger. Many ferroelectric materials, some of which may be far more sensitive than those listed below, are currently being studied, although few measured or calculated pyroelectric coefficients have been published. Several of the more sensitive pyroelectric materials are listed in Table II. The sensitivities are based on the optimum rod-shaped sensing element having a volume of 0.1 cm^3.

TABLE II

Sensitivity of various pyroelectric materials.

Material	T^oC	p	K	Θ	Θ/Θ_{BaTiO_3}
$BaTiO_3$ ceramic	25	$2x10^{-8}$	1200	97	1
	100	$6x10^{-8}$	1600	252	2.6
$BaTiO_3$ single-domain crystal	25	$2x10^{-8}$	160	265	2.7
	100	$2x10^{-7}$	800	1190	12.3
91% $BaTiO_3$, 9% $CaTiO_3$ ceramic	25	$3.5x10^{-8}$	1200	170	1.8
Rochelle salt	25	$1.67x10^{-8}$	400	140	1.5

3. A number of sensing elements can be connected in series to give a larger over-all voltage. The usual error of heat loss along the leads of a thermopile does not occur here because the sensing elements and their interconnecting leads are all at the same temperature. If 10 barium titanate ceramic rod-shaped elements of the size described above are connected in series, the [illegible] sensitive [illegible] a temperature change [illegible]

device will be sensitive to a temperature change of 10^{-8} °C. If 40 rod-shaped elements, each having half the cross-sectional area and half the length of the above elements, are connected in series, the circuit becomes sensitive to a temperature change of 5×10^{-9} °C.

ANALYSIS OF PYROELECTRIC DEVICE

There are three main sources of electrical error in the circuit:

1. Some error is inherent in the vibrating-reed electrometer. A more or less steady background current is produced by contact potentials, thermoelectric potentials, insulation strain, etc. This background current corresponds to less than 6×10^{-16} coulomb and is relatively reproducible. It can be determined from a blank run and a correction can be made for it.[4]

2. Contact and thermoelectric potentials can be made very small if precautions are taken to eliminate dissimilar metal contacts and to use homogeneous leads. Further, since very small temperature changes are being measured, these potentials change little with time. Since all voltages that enter into Eq. (3) are differentiated with respect to time (with the exception of the second term, which is very small), contact and thermoelectric potentials cause negligible error.

3. Johnson noise, which may be produced in the pyroelectric device itself, manifests a current inversely proportional to the square root of the resistance. In this circuit, the Johnson-noise current is of the order of the sensitivity of the electrometer and can be neglected.

The total effect of the calibration error and of the three sources described, for a rod-shaped sensing device, causes an estimated error in the measurement of 10^{-4} °C, of about 0.5%.

A pyroelectric thermometer can be compared with other types of thermometers as follows:

1. No other temperature-sensing device in use has the sensitivity of a pyroelectric thermometer. It would require a thermopile containing many thousand thermocouples to achieve this sensitivity, but such a thermopile would be difficult to construct and probably highly inaccurate. To measure a temperature change of 10^{-3} °C with a platinum resistance thermometer requires

measurement of a resistance within several parts per million. A thermistor is 10 to 100 times as sensitive as a platinum resistance thermometer, which is still far below the sensitivity of a pyroelectric device. Furthermore, both the platinum resistance thermometer and the thermistor require the input of electrical energy for measurement of their resistance. This input is an additional source of error in accurate calorimetric measurements.

2. The device produces a charge rather than a voltage. Very small charges can be read much more easily than small voltages. In addition, measuring circuits for charges are much less sensitive to stray potentials, as discussed above.

3. The operation of a pyroelectric thermometer is not restricted to the use of a barium titanate ceramic as a sensing element. Operation of a pyroelectric thermometer above about 100° C would require a material having a higher Curie point than barium titanate. Many materials having the perovskite structure of barium titanate are being studied, and some have been found with a larger pyroelectric coefficient than that of barium titanate. $PbNb_2O_6$ has a Curie point of 570°C,[5] and barium zirconium metaniobate has a Curie point higher than 1400°C.[6] Thus it appears possible to extend the use of pyroelectric thermometers to very high temperatures and, perhaps, to very low ones also.

4. The barium titanate rod in Fig.1(b), if enclosed in a protective sheath, has a thermometric time lag, in a well-stirred calorimeter, of about 0.8 seconds. The thermometric time lag is defined as the time required for a thermometer to respond to within 1/e of the initial temperature difference between it and an isothermal bath into which it is plunged. An instrument with a more rapid response could be made, but with proportional loss in sensitivity, by reducing the size of the device.

---

[5] Don Berlincourt, IRE Trans. on Ultrasonics Eng. PGUE-4, 53 (1956).

[6] G. Goodman, J. Am. Ceram. Soc. 43, 105 (1960).

USES

The list of possible uses for a pyroelectric thermometer in measuring small temperature changes is almost endless. Calorimetric measurements might include heats of mixing, heats of dilution, heats of adsorption, heats of wetting, heats of radioactive decomposition, heats of setting of cements, heats of mechanical strain, etc. Measurement of the molecular weights of high-molecular-weight compounds by boiling-point elevation or freezing-point depression requires accurate and sensitive thermometry. Pyroelectric devices could be used as the sensing elements in radiation pyrometers or bolometers.

Another series of possibilities can be seen from a time differentiation of Eq. (1),

$$I = \frac{dQ}{dt} = p\,A\,\frac{dT}{dt} . \qquad (7)$$

The current I produced by a pyroelectric device is directly proportional to the time derivative of the temperature change. If the current measured by a vibrating-reed electrometer is large enough, an accurate large resistor can be connected across the electrometer terminals and the voltage drop across the resistor measured. If the value of the resistance is 10^7 ohms or less, the effective RC time constant of the pyroelectric device—electrometer circuit is very small and the electrometer almost immediately reads the voltage drop across the resistor. An analysis similar to that used in deriving Eq. (4) shows

$$\frac{dT}{dt} = \frac{E_f}{RpA} , \qquad (8)$$

where R is the value of the resistor placed across the electrometer terminals. Often, in heat-transfer measurements, the values of dT/dt at a number of points are of greater interest than precise values of the temperature at the points. A series of pyroelectric sensing elements could be placed at various points on the object being studied. All the elements could be wired into a multiple switch so that they could be connected alternately to a vibrating-reed electrometer. Thus, time derivatives at a number of points could be measured directly rather than by difficult and often erroneous differentiation of temperature data.

SUMMARY

A survey shows various possibilities inherent in the use of pyroelectric devices to measure small temperature changes. A small rod-shaped sensing element of barium titanate ceramic can detect a temperature change of 2×10^{-7} °C and permits measurement of temperature changes of 10^{-4} °C to within an estimated 0.5%. Sensitivity can be increased very greatly by use of more sensitive pyroelectric materials or by use of sensing elements in series, or both. Accuracy is high because of the circuit's freedom from ordinary thermometric electrical errors. Many possible calorimetric and noncalorimetric uses for a pyroelectric thermometer are given. The number of effects and phenomena that can be studied by means of a pyroelectric temperature-sensing device is limited only by the imagination of the experimenter.

ACKNOWLEDGMENTS

The author wishes to thank Donald N. Hanson, Donald R. Olander, and Eugene E. Petersen for helpful discussions and suggestions.

The work was supported financially by the National Science Foundation and the U. S. Atomic Energy Commission.

This report was prepared as an account of Government sponsored work. Neither the United States, nor the Commission, nor any person acting on behalf of the Commission:

A. Makes any warranty or representation, expressed or implied, with respect to the accuracy, completeness, or usefulness of the information contained in this report, or that the use of any information, apparatus, method, or process disclosed in this report may not infringe privately owned rights; or

B. Assumes any liabilities with respect to the use of, or for damages resulting from the use of any information, apparatus, method, or process disclosed in this report.

As used in the above, "person acting on behalf of the Commission" includes any employee or contractor of the Commission, or employee of such contractor, to the extent that such employee or contractor of the Commission, or employee of such contractor prepares, disseminates, or provides access to, any information pursuant to his employment or contract with the Commission, or his employment with such contractor.