UCRL 9340

UNIVERSITY OF CALIFORNIA

Ernest O. Lawrence Radiation Laboratory

TWO-WEEK LOAN COPY

This is a Library Circulating Copy which may be borrowed for two weeks. For a personal retention copy, call Tech. Info. Division, Ext. 5545

BERKELEY, CALIFORNIA

DISCLAIMER

This document was prepared as an account of work sponsored by the United States Government. While this document is believed to contain correct information, neither the United States Government nor any agency thereof, nor the Regents of the University of California, nor any of their employees, makes any warranty, express or implied, or assumes any legal responsibility for the accuracy, completeness, or usefulness of any information, apparatus, product, or process disclosed, or represents that its use would not infringe privately owned rights. Reference herein to any specific commercial product, process, or service by its trade name, trademark, manufacturer, or otherwise, does not necessarily constitute or imply its endorsement, recommendation, or favoring by the United States Government or any agency thereof, or the Regents of the University of California. The views and opinions of authors expressed herein do not necessarily state or reflect those of the United States Government or any agency thereof or the Regents of the University of California.

For Publication in Physical Review

UCRL-9340
Limited distribution

UNIVERSITY OF CALIFORNIA
Lawrence Radiation Laboratory
Berkeley, California

Contract No. W-7405-eng-48

SEARCH FOR NEUTRINOLESS CONVERSION OF A MUON INTO AN ELECTRON

R.D. Sard, K.M. Crowe, and H. Kruger

August 11, 1960

SEARCH FOR NEUTRINOLESS CONVERSION OF MUON INTO ELECTRON

R.D. Sard, K.M. Crowe, and H. Kruger

Lawrence Radiation Laboratory
University of California
Berkeley, California

August 11, 1960

ABSTRACT

A search has been made for the hypothetical reaction in which a muon near a nucleus is converted into an electron without production of neutrinos. Negative muons were stopped in a copper target. A magnetic spectrometer at right angles to the beam transmitted particles of the momentum expected for the electron (about 90 Mev/c on entry into the spectrometer). A long scintillation counter at the output of the spectrometer gave a pulse corresponding to the emerging particle's energy loss. Selection by both momentum and pulse height eliminated particles heavier than the electron and greatly reduced the accidental background. In the main run, three events meeting the selection criteria were recorded, while the expected number of accidentals is 0.23 ± 0.04. Various alternative processes that would produce accepted events are considered and found to give expectation values even smaller than that for accidentals. Without further experimentation, we cannot decide whether the hypothetical reaction does or does not occur, but we can set an upper limit of $(4^{+3}_{-2}) \times 10^{-6}$ on the ratio, R, of the reaction rate to that of normal absorption.

SEARCH FOR NEUTRINOLESS CONVERSION OF MUON INTO ELECTRON*

R.D. Sard†, K.M. Crowe, and H. Kruger

Lawrence Radiation Laboratory
University of California
Berkeley, California

August 11, 1960

I. INTRODUCTION

We have carried out an experiment designed to detect the hypothetical reaction in which a negative muon near a nucleus is converted into an electron without production of neutrinos. Several theoretical estimates of the rate of this reaction have recently been made.[1-5] Weinberg and Feinberg[1] have emphasized that if the reaction results from structure in the $\mu\mu e\gamma$ interaction, different form factors are involved than those determining the $\mu \rightarrow e + \gamma$ rate, so that the observed rarity of the latter reaction does not necessarily imply a low rate for the one under consideration. Using Primakoff's[6] fit to the observed negative-muon absorption rates in complex nuclei, and Hofstadter's[7] results on the nuclear form factor, we find that their expression (1) for the branching ratio, R, of the coherent reaction in which the nucleus recoils rigidly to the normal absorption reaction with emission of a neutrino,

$$R = \frac{\text{rate of } \mu^- + (Z, A) \rightarrow e^- + (Z, A)}{\text{rate of } \mu^- + (Z, A) \rightarrow (Z-1, A)^* + \nu} ,$$

*This work was done under the auspices of the U.S. Atomic Energy Commission.

†On leave of absence from Washington University, Saint Louis, Missouri.

has the value $1.25\ \xi_0^2 / \xi_\beta^2$ for copper. Here ξ_0^2 and ξ_β^2 are algebraic functions of the $\mu\mu e\gamma$ form factors and the β-decay coupling constants, respectively. The intermediate vector boson hypothesis predicts ξ_0^2 / ξ_β^2 on the order of 2.5×10^{-6}. Less than one-seventh of the reactions are expected to be incoherent, i.e. to excite the nucleus. In the coherent case, the electron is emitted with a unique energy of 103.6 Mev. In the incoherent reaction, the electrons are expected to have a spectrum some 20 Mev wide centered at 98.5 Mev.

The hypothesis of different muon and electron neutrinos absolutely forbids the neutrinoless conversion of a muon into an electron.[8-11]

The pioneer cosmic-ray experiment of Lagarrigue and Peyrou showed that R is at most a few percent.[12] More recently, Steinberger and Wolfe have searched for the reaction by counting particles with range greater than 24.5 g-cm^{-2} polyethylene emerging from a 0.317-cm copper target within 0.2 μsec of an incident negative meson.[13] In a run in which they expected 1.86 accidental counts and 2.62×10^3 R real counts,[14] no counts were recorded. Since the probability of obtaining no real events is exp $(-2.62 \times 10^3\ R)$. It is likely that R does not exceed 10^{-3}.

In our experiment a copper target was placed at muon range in the negative-meson beam of the 184-in. synchrocyclotron. A 180-deg, n = 1/2 magnetic spectrometer was used to select particles with momentum in the neighborhood of 90 Mev/c.[15] A 45.7-cm-long plastic scintillation counter receives particles emerging from the spectrometer; the pulse height is measured both with a gated twenty-channel pulse-height analyzer and by photographing the amplified pulse on a cathode-ray oscilloscope. Selection of particles by both momentum and energy greatly reduces the spurious background and has permitted a reduction of the smallest detectable value of R by two powers of ten.

II. APPARATUS

Figure 1 is a perspective sketch of the essential features of the arrangement. The 210-Mev/c negative external beam is filtered by 45.5 g-cm^{-2} graphite equivalent before striking the 5.61 g-cm^{-2} copper target placed at 45 deg to the beam direction. Scintillation counters π_1 and π_2 in the moderator respond to almost all of the beam particles, of which only some 10 to 20% are muons. The counter train β_1, β_2, β_3, β_4 and β_5 selects particles that leave the target horizontally at 90 deg to the beam, traverse the spectrometer, and enter the long (47.9 g-cm^{-2}) plastic scintillator. The 1.02-g cm^{-2} lithium and 4.00 g-cm^{-2} graphite slabs between the β counters serve to reduce the accidental-coincidence rate. The average ionization energy loss of a 100-Mev electron between the middle of the target and the mouth of the spectrometer is 8.8 Mev. The resolution function of the spectrometer with this source and detector arrangement is an isosceles triangle of full width at half maximum, $\Delta p/p_0$, equal to 9.8%. During the main run, its center, p_0, was set at 90 Mev/c.

The circuitry is shown schematically in Fig. 2, with the amplifiers, discriminators, and scalers omitted (the outputs of all four coincidence circuits are recorded). The coincidence-anticoincidence circuits W3 and W4 are cascaded, W4 giving the output $\beta_1\beta_2\beta_3\beta_4\beta_5\,\bar{\pi}_1\,\bar{\pi}_2$ corresponding to a particle not in prompt coincidence with a beam particle passing through the spectrometer and entering the long counter. The resolving times are approximately $\pm 4\times 10^{-9}$ sec. A pulse from π_1 makes W4 inoperative for 14×10^{-9} sec; one from π_2 makes W3 inoperative for 21×10^{-9} sec. The output of W4 opens a gate about 40×10^{-9} sec long to the pulse-height analyzer (PHA) and triggers a 20×10^{-9} sec/cm oscilloscope sweep. A positive pulse

from the tenth dynode of the fourteen-stage photomultiplier tube looking at the long counter is fed through the gate circuit to the PHA and is also applied to the vertical-deflection system of the oscilloscope. The circuits recording the W4 and PHA outputs are gated by a 1.1×10^{-3} sec pulse bracketing the cyclotron beam. This reduces the cosmic-ray contribution to the data by the factor $(10^3/64\times1.1) = 14$.

To calibrate the pulse-height-analysis system, we placed the long counter in the meson beam with 3 in. of graphite in front of it. Most of the particles entering it are then pions of about 81 Mev energy, which stop in the counter. They should give pulses corresponding to 81 Mev plus the energy loss by the charged particles in the star; the total light should correspond to about 110-Mev energy dissipation by a fast particle. The kinetic energy of the muons entering the counter is 101 Mev. They too stop in the counter. In most cases a decay electron is emitted so long after the muon stops that it does not contribute to the measured pulse. The electrons passing through the long counter lose 88 Mev by ionization; shower development is not negligible, as the length of the counter is 1.1 radiation lengths. The pulse-height distribution obtained is shown in Fig. 3a. It peaks in channels 15, 16, and 17. Pulse-height distributions were also measured in the calibration runs (see below) with a carbon target, the spectrometer set at 43.3 Mev/c, and the long counter in its normal position. These correspond to the top of the $\mu^- \rightarrow e^-$ decay spectrum in carbon. The distribution, summed over all the calibration runs during the main run, is shown in Figure 3b. The electron energy on entry into the long counter centers at about 35 Mev. The pulse-height distribution is seen to peak near channel 7. Comparing the distributions, we see that channel number of the

peak corresponds roughly to the energy loss, and that the PHA system is adjusted properly for detecting electrons such as those expected to result from muon conversion. For 90 Mev/c momentum in the spectrometer, electrons reach the long counter with about 82-Mev kinetic energy, to give a pulse-height distribution peaking in channel 12. Muons would enter the long counter with only 17 Mev; pions would not even reach it.

The pulses photographed on the oscilloscope screen correlated in height with the number of the PHA channel in which the event was recorded; the larger the pulse, the higher the channel number.

III. RESULTS

For an event to be counted in the data run, it was required that it be recorded in the gated scaler on the W4 output and in one of channels 2 through 20 of the gated PHA, and that a pulse of appropriate height be photographed on the oscilloscope screen.

In the main run, which lasted 95.2 hr with the spectrometer set at 90 Mev/c, three events satisfying these criteria were found. One was in channel 6 and two were in channel 10.

In order to determine the number of muon conversions to be expected in this time, the run was interspersed with short runs in which the copper target was replaced by a graphite target of the same stopping power, and the spectrometer setting was reduced to 43.3 Mev/c. Denoting by β the number of recorded events, we have

$$\beta\,(43.3\ \text{Mev/c},\ \text{C}) = S_c \times f_{dec} \times f_{>21} \times \Omega/4\pi \times \eta\,(43.3\ \text{Mev/c}, \text{C}) \times \epsilon\ . \tag{1}$$

Here S_c is the number of muons stopping in the carbon target; f_{dec}, the fraction of stopped muons that decay, is 0.92;[16] $f_{>21}$, the fraction of decays occurring after 21×10^{-9} sec, is 0.99;[17,18] Ω is the effective solid angle of the spectrometer; η (43.3 Mev/c, C) is the normalized response of the spectrometer, when set at 43.3 Mev/c, to the spectrum of decay electrons from the carbon target; and ϵ is the efficiency of the counting system. During a normal run, on the other hand, we have

$$\beta\,(90\ \text{Mev/c, Cu}) = S_{Cu} \times f_{int} \times R \times f_{>21} \times \Omega/4\pi \times \eta\,(90\ \text{Mev/c, Cu}) \times \epsilon\,. \tag{2}$$

Here S_{Cu} is the number of muons stopping in the copper target; f_{int}, the fraction of stopped muons that interact, is 0.93;[19] $f_{>21}$, the fraction of interactions taking place after 21×10^{-9} sec, is 0.88;[17,19] and η (90 Mev/c, Cu) is the normalized response of the spectrometer when set at 89.4 Mev/c to the spectrum of conversion electrons produced in the copper. One can now determine $\Omega \times \epsilon$ from the carbon data, obtaining

$$\beta(90\ \text{Mev/c, Cu}) = R \times \beta\,(43.3\ \text{Mev/c, C})\,\frac{S_{Cu}}{S_c} \times 0.90 \times \frac{\eta(90\ \text{Mev/c, Cu})}{\eta(43.3\ \text{Mev/c, C})} \tag{3}$$

The spectrometer response functions, η, were computed numerically. The Landau distribution of ionization losses, Heitler's radiation straggling distribution, and the calculated triangular resolution function of the instrument were assumed.[20] For the coherent-conversion process (with a unique initial electron energy of 103.6 Mev), η (90 Mev/c, Cu) is 0.23. For the decay electrons from carbon, a calculation based on the positive muon spectral shape gives η (43.3 Mev/c, C) = 0.067. We use 3.5 for the ratio of the

response functions. For the ratio of the numbers of stoppings, S_{Cu}/S_C, we take the ratio of the target thicknesses in muon stopping power, as read from range-momentum curves. In the first part of the run, the carbon calibration target (3.76 g-cm^{-2}) was somewhat thin, and the ratio is 1.12. In the latter part of the run, another carbon target was used, for which the ratio is 1.00. The β (43.3 Mev/c, C) rate in the first part was 31.1 ± 0.4 min^{-1}; in the second part, 39.3 ± 0.6 min^{-1}. The corresponding running times at 90 Mev/c with the copper target were 3.36×10^3 min. and 2.25×10^3 min. With these values Eq. (3) becomes

$$\beta\ (89.4\ \text{Mev/c, Cu}) = 6.5 \times 10^5\ R. \qquad (4)$$

This is the expected number of recorded events in the 95.2-hr run, to be compared with the three that were found.

Measurements of the various counting rates show that the accidental coincidences are due overwhelmingly to overlapping of real $(\beta_1\ \beta_2)$ events with real $(\beta_3\ \beta_4\ \beta_5)$ events. The pulse-height distribution obtained when the PHA is gated by $(\beta_3\ \beta_4\ \beta_5\ \bar{\pi}_2\ \bar{\pi}_1)$ is shown in Fig. 3c. It is a falling one, with 41/143 = (29 ± 4)% of the pulses occurring in channels 6 through 20 and 18/143 = (13 ± 3)% of the pulses in channels 10 through 20. The effective-duty-cycle-resolving-time factor was determined periodically by comparing the $(\beta_2\ \beta_3\ \beta_4\ \bar{\pi}_2)$ rate with the product of the $(\beta_2\ \bar{\pi}_2)$ and $(\beta_3\ \beta_4\ \bar{\pi}_2)$ rates; the quotient was found to be essentially constant at 37×10^{-10} min. The $(\beta_2\ \beta_3\ \beta_4\ \bar{\pi}_2)$ rate monitored during the run was found to correlate closely with the product $(\beta_1\ \beta_2) \times (\beta_3\ \beta_4\ \beta_5)$, so that its average value over the whole run could be used to determine the effective average accidental rate. The result is $(1.4 \pm 0.15) \times 10^{-4}$ min^{-1}, or a total of 0.80 ± 0.09 events, in channels 2 through 20. From the pulse-height distribution of Fig. 3c, it

follows that 0.23 ± 0.4 accidental events are expected in channels 6 through 20, and 0.10 ± 0.03 in channels 10 through 20.

Evidence has recently been obtained[19, 21] indicating that the decay rate of negative muons stopped in iron is some 10 to 20% greater than that for copper. The experimental effect is an increase in the yield of delayed electrons of energy greater than some 10 to 20 Mev. To test the very remote possibility that the effect is due to a high rate of neutrinoless conversion in iron, we took data for a short time with the copper target replaced by an iron one of the same thickness. In 46.0 minutes of running time with the spectrometer set at 90 Mev/c, no events were observed. The expected number, in terms of R_{Fe}, is $5.5 \times 10^3 R_{Fe}$. To account for a 10% increase in the yield of fast electrons, R_{Fe} would need to have the value 10^{-2}, which gives an expected number of recorded events of 55. Evidently, neutrinoless conversion is ruled out as an explanation of the increased electron yield from iron. The conversion rate in iron does not exceed that in copper by several powers of ten.

IV. DISCUSSION

It is evident from Eq. (4) that R does not exceed 10^{-5} in order of magnitude--otherwise many more events would have been recorded.

Since three events were recorded in channels 6 through 20, as compared with 0.23 ± 0.04 expected accidentals, it is very unlikely that all three of them are accidental. The case for reality of the two events in channel 10 is even stronger, as the expected number of accidentals in channel 10 through 20 is only 0.10 ± 0.03.

To draw a more definite conclusion from the experiment, we must assess the likelihood of the various alternative physical mechanisms that would produce real coincidences.

A natural limit to the sensitivity of the experiment is provided by the high-energy tail of the $\mu^- \rightarrow e^- + \nu + \bar{\nu}$ spectrum, which results from the orbital motion of the muon at the moment of decay. Measurements of the rates with the copper target in position and the spectrometer set at 43.3 Mev/c were interspersed in the run; the result was β(43.3 Mev/c, Cu) = 76 ± 5 hr^{-1}. The observed β(90 Mev/c, Cu) = 0.032 ± 0.018 hr^{-1} is down by only a factor of $(2.4 \pm 1.4) \times 10^3$, while the tail of the muon decay spectrum makes a contribution that is down by a factor of at least 3×10^6.

We have considered the possibility of scattering of a 100-Mev electron into the spectrometer. Most of the scattering is elastic, with a cross section of about 4.5×10^{-31} cm^2 per Cu atom;[7] the probability of scattering into the 1.8×10^{-2} sr solid angle of the spectrometer is then 6.1 ± 10^{-10} per electron. The proportion of electrons in the beam has been measured on other occasions, and the number of electrons reaching the copper target is certainly less than the number of muons stopping there. The latter figure is estimated from the carbon target, 43.3 Mev/c, data to be 1.3×10^9 in the 95.2-hr running period. Less than 5% of the electrons are in a 10-Mev band at 100 Mev. An upper limit on the expected number of scattered electrons is therefore 0.04. This does not take into account the reduction in detected electron scattering due to the anticoincident π counters. It is very unlikely that electron scattering accounts for any of the three recorded events.

Another possibility is that the events might be due to a contamination by negative pions. This was suggested by the observation that with 10.6 g-cm^{-2} C removed from the moderator so as to place the target at pion range, a considerably larger rate – 2.6 ± 0.9 hr^{-1} in channels 2 through 20 and

$2 \pm 0.8\ hr^{-1}$ in channels 6 through 20—was obtained at the 90 Mev/c setting. This could be due to occasional (a few percent) emission of a high-energy gamma ray on pion capture,[22] the gamma ray then materializing to produce a 100-Mev electron. To investigate this possibility, we exposed Ilford G-5 nuclear plates in front of the target with the moderator at its normal thickness. An area scan showed 932 zero-prong meson endings, 18 one-prong endings, and two two-prong endings. Electron tracks were not recorded. This prong distribution agrees with that reported by Morinaga and Fry[23] for a similar type of exposure, and is markedly different from that observed for negative-pion endings, 49% of which have at least two prongs.[24] Moreover, the two-prong stars had the short prongs characteristic of muon stars. Thus a conservative upper limit on the fraction of pions stopping in the copper target at muon range is 0.4%. If about six times as many pions stop at π range as muons at μ range, the upper limit on the pion effect at μ range is

$$\frac{1}{6} \times 4 \times 10^{-3} \times (2 \pm 0.8) \times 95.2 = 0.13 \pm 0.05$$

events in channels 6 through 20. It is very unlikely that pion contamination accounts for the observed effect.

Large cosmic-ray air showers capable of being detected through the 239-g $239\ g\text{-}cm^{-2}$ iron shield above β_3, β_4, and β_5 but missing the π_1 and π_2 counters would produce real coincidences satisfying the selection criteria. The number of these expected in our sensitive time is $<< 1$.[25]

No likely interpretation of the three recorded events is known to us. They represent either a combination of fluctuations of accidental and real background or the neutrinoless conversion of muons into electrons. Further experimentation is needed to decide between these alternatives.

V. CONCLUSIONS

While we cannot draw a definite conclusion as to whether or not the hypothetical neutrinoless muon-electron conversion process has been detected, we can set an upper limit on the branching ratio, R, of this process relative to normal absorption. This is found by estimating R on the assumption that the events detected are sampled from reals plus accidentals in expected number 0.23 ± 0.04. Denoting the estimate of R by R^*, we have

$$(3 \pm \sqrt{3}) - (0.23 \pm 0.04) = 6.5 \times 10^5 R^*$$

or

$$R^* = (4 \pm 3) \times 10^{-6} .$$

To express in quantitative terms the result of an experiment yielding no or, at best, a handful of events requires some convention about the statistical "confidence level" used. The result is best presented in the form of a curve showing the likelihood of the observed result as a function of the true value of the parameter being estimated. The absolute value of the likelihood is of no significance for estimating the parameter, but fractional changes are indicative of the relative likelihoods of the corresponding values of the parameter. To facilitate such comparison, we normalize the likelihood function to maximum value unity. In Fig. 4, curve A is plotted the Poisson expression for the likelihood of obtaining three events when the expected number is $0.23 \pm 6.5 \times 10^5$ R. It has its maximum at $R = 4.3 \times 10^{-6}$ and is reduced by a factor of exp (-1/2) at $R = 7.3 \times 10^{-6}$, in agreement with the estimate of the preceding paragraph. For comparison with the result of reference 13, we reproduce (curve B) the likelihood curve given there, as well as the corresponding function (curve C), calculated on the assumption that the conversion process is coherent rather than incoherent, so that the expected number of events is $1.86 + 3.56 \times 10^3$ R instead of $1.86 + 2.62 \times 10^3$ R. Evidently the present experiment reduces the

upper limit on R by a factor of between 20 and 100, depending on the "confidence level" used.

ACKNOWLEDGMENT

We should like to thank Dr. Steven Weinberg for stimulating discussions, and Mr. James Vale and the cyclotron staff for the steady beam that made this experiment possible. We are grateful to Mr. Stanford P. Lyon and Fr. Z. O'Friel for scanning the nuclear emulsion, Dr. Elihu Lubkin for estimating the tail of the muon decay spectrum, and Phillip Beilin and Lawrence Jellin for assistance with the computations.

REFERENCES

1. S. Weinberg and G. Feinberg, Phys. Rev. Letters 3, 111 and 244 (1959).
2. S.P. Rosen, Nuovo cimento, 16, 7 (1960).
3. J. Dreitlein, Structure of Weak Interactions, Thesis, Washington University, Saint Louis, June 1960 (unpublished).
4. R. Gatto, Lectures on Some Questions of the V-A Theory, given at the International School of Physics of the Italian Physical Society, Varenna sul Lago di Como, Italy, June 29-July 11, 1959 (unpublished); N. Cabibbo and R. Gatto, Phys. Rev. 116, 1334 (1959).
5. B. Jouvet and J.C. Houard, Nuovo cimento 15, 31 (1960).
6. H. Primakoff, Revs. Modern Phys. 31, 802 (1959).
7. B. Hahn, D.G. Ravenhall, and R. Hofstadter, Phys. Rev. 101, 1131 (1956).
8. E.M. Lipmanov, J. Exptl. Theoret. Phys. (U.S.S.R.) 37, 1054) (1959).
9. Y. Tanikawa and S. Watanabe, Phys. Rev. 113, 1344 (1959).
10. B. Pontecorvo, J. Exptl. Theoret. Phys. (U.S.S.R.) 37, 1751) (1959).
11. T.D. Lee and C.N. Yang, Phys. Rev. Letters 4, 307 (1960).
12. A.Lagarrigue and Ch. Peyrou, Compt. rend. 234, 1873 (1952).
13. J. Steinberger and H.B. Wolfe, Phys. Rev. 100, 1490 (1955).
14. The coefficient 2.62×10^3 was calculated in reference 13 on the assumption that the reaction is incoherent. If it is coherent, the probability of the electron's emerging from the copper with enough energy to penetrate the range telescope is increased, and the coefficient of R needs to be somewhat larger. From the curve given in reference 13 for the detection probability as a function of energy and the Bethe-Heitler radiation cross section, we estimate its value should be 3.56×10^3 in this case.

15. H. Kruger and K.M. Crowe, Phys. Rev. 113, 341 (1959).

16. F.R. Stannard, Phys. Rev. Letters 4, 523 (1960).

17. J.C. Sens, Phys. Rev. 113, 679 (1959).

18. R.A. Reiter, T.A. Romanowski, R.B. Sutton, and B.G. Chidley, Phys. Rev. Letters 5, 22 (1960).

19. F.E. Holmstrom and J.W. Keuffel University of Utah, Salt Lake City, (private communication).

20. Hans Kruger, The Momentum Dependence of the Asymmetry in Muon Decay, Thesis, University of California, Berkeley, UCRL-9322, September 1960, (unpublished).

21. D. Yovanovitch, Phys. Rev. 117, 1580 (1960).

22. K. Brueckner, R. Serber, and K. Watson, Phys. Rev. 84, 258 (1951).

23. H. Morinaga and W.F. Fry, Nuovo cimento 10, 308 (1953).

24. C.F. Powell, P.H. Fowler, and D.H. Perkins, The Study of Elementary Particles by the Photographic Method (Pergamon Press, New York, 1959), p. 250, Fig. 8-3.

25. B. Rossi, Proceedings of the Moscow Cosmic-Ray Conference, July 6-11, 1959 (International Union of Pure and Applied Physics, Moscow, 1960), Vol II, p. 19.

FIGURE LEGENDS

Fig. 1. Schematic drawing of the geometrical arrangement. The meson beam from the cyclotron is horizontal. Particles leaving the target horizontally at right angles to the beam enter the spectrometer. After being bent 180 deg they emerge horizontally into a long plastic scintillator used for energy discrimination.

Fig. 2. Schematic diagram of the electronic circuits. Amplifiers, discriminators, scalers, and recorders are omitted. The cascaded fast coincidence-anticoincidence circuits W_3 and W_4 give an output corresponding to $\beta_1 \beta_2 \beta_3 \beta_4 \beta_5 \bar{\pi}_1 \bar{\pi}_2$. This output opens the gate to a 20-channel pulse-height analyzer and triggers the sweep of an oscilloscope on which the pulse is photographed, thus proving two independent measures of the pulse height in β_5.

Fig. 3. Pulse-height distributions from the long counter. (a) Counter in the negative-meson beam, behind 13 g-cm^{-2} graphite. The particles entering the counter are mostly pions of 80-Mev kinetic energy. (b) Counter in normal position, spectrometer set at 43.3 Mev/c, carbon target. The pulses are due to decay electrons from muons stopped in the target. (c) Counter in normal position, spectrometer set at 90 Mev/c, copper target. The PHA is gated by ($\beta_3 \beta_4 \beta_5 \bar{\pi}_2 \bar{\pi}_1$) coincidences. In this case, the pulse-height distribution is that characteristic of accidental events.

Fig. 4. Likelihood of the experimental result as a function of the true value of the branching ratio R. The curves are normalized to a maximum value of unity. (a) Curve for the present experiment. It is the

probability of detecting three events when $0.23 + 6.5 \times 10^5$ R are expected. (b) Curve for experiment of reference 13. (c) Curve for experiment of reference 13, recalculated on the assumption that the conversion process is coherent rather than incoherent.

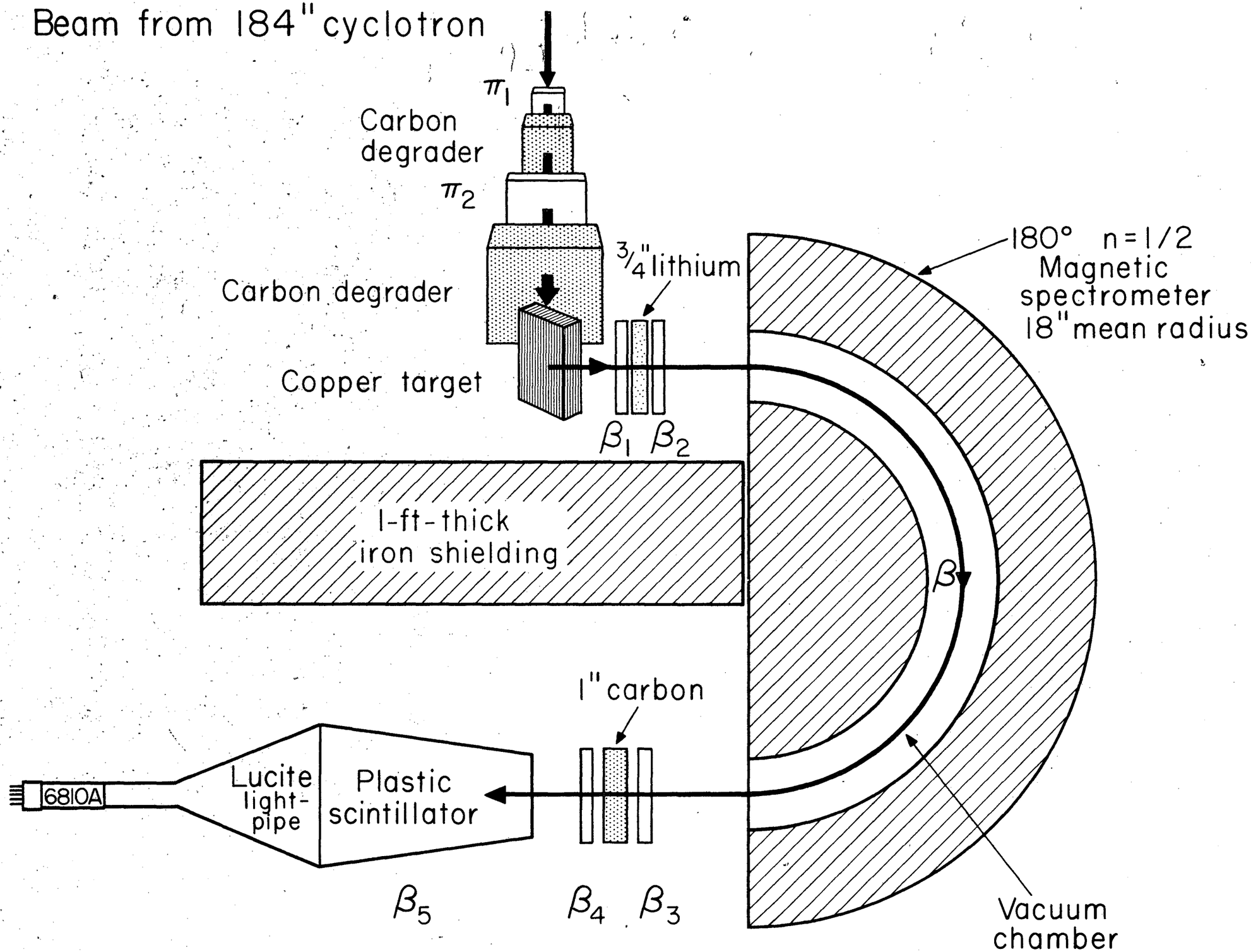
Beam from 184" cyclotron
π_1
Carbon degrader
π_2
Carbon degrader
Copper target
3/4" lithium
β_1 β_2
180° n=1/2 Magnetic spectrometer 18" mean radius
1-ft-thick iron shielding
β
1" carbon
6810A
Lucite light-pipe
Plastic scintillator
β_5
β_4 β_3
Vacuum chamber

57,655-2

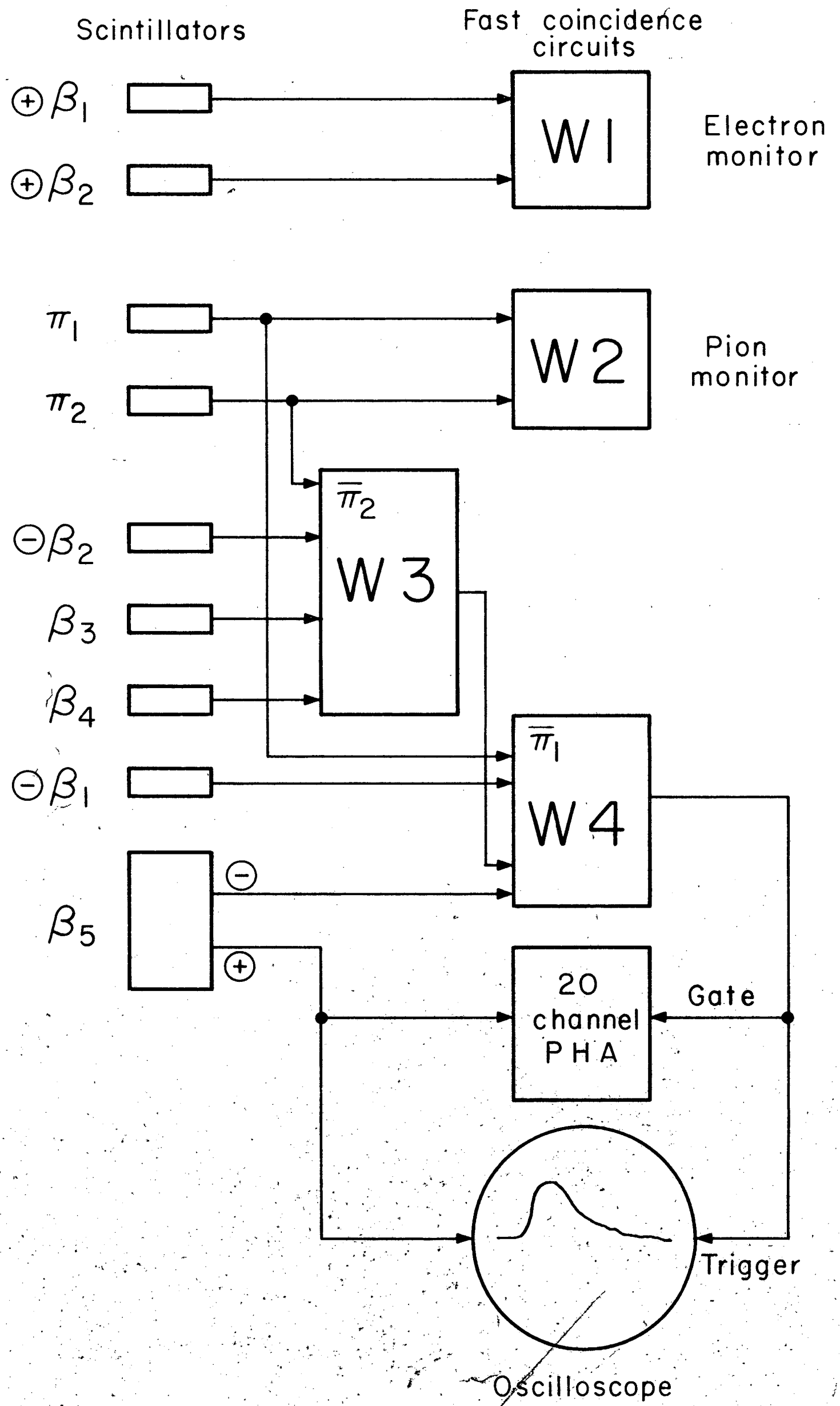

[redacted]

57656-2

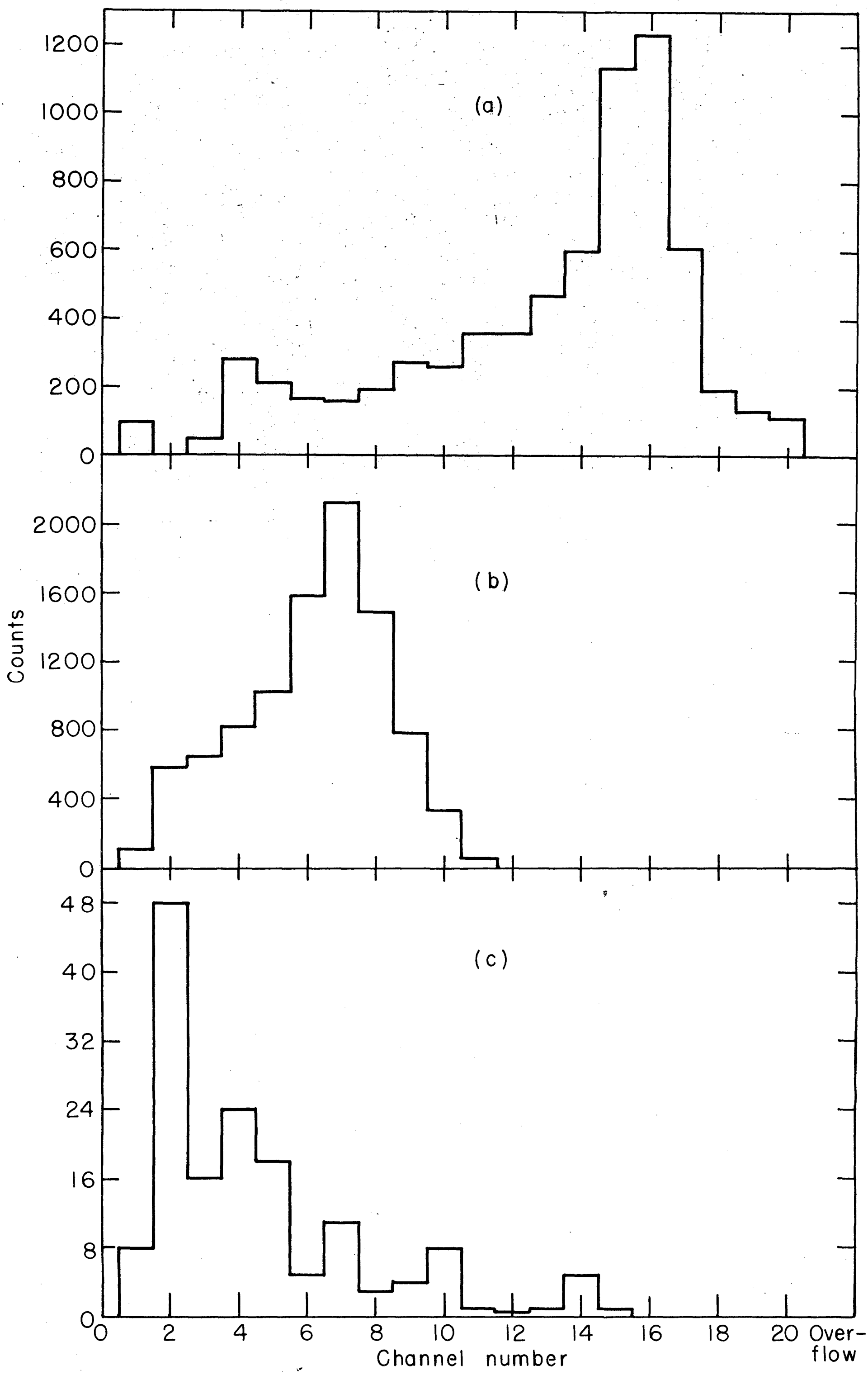
(a)
(b)
(c)
Counts
1200
1000
800
600
400
200
0
2000
1600
1200
800
400
0
48
40
32
24
16
8
0
0
2
4
6
8
10
12
14
16
18
20
Over-flow
Channel number

58,011-2

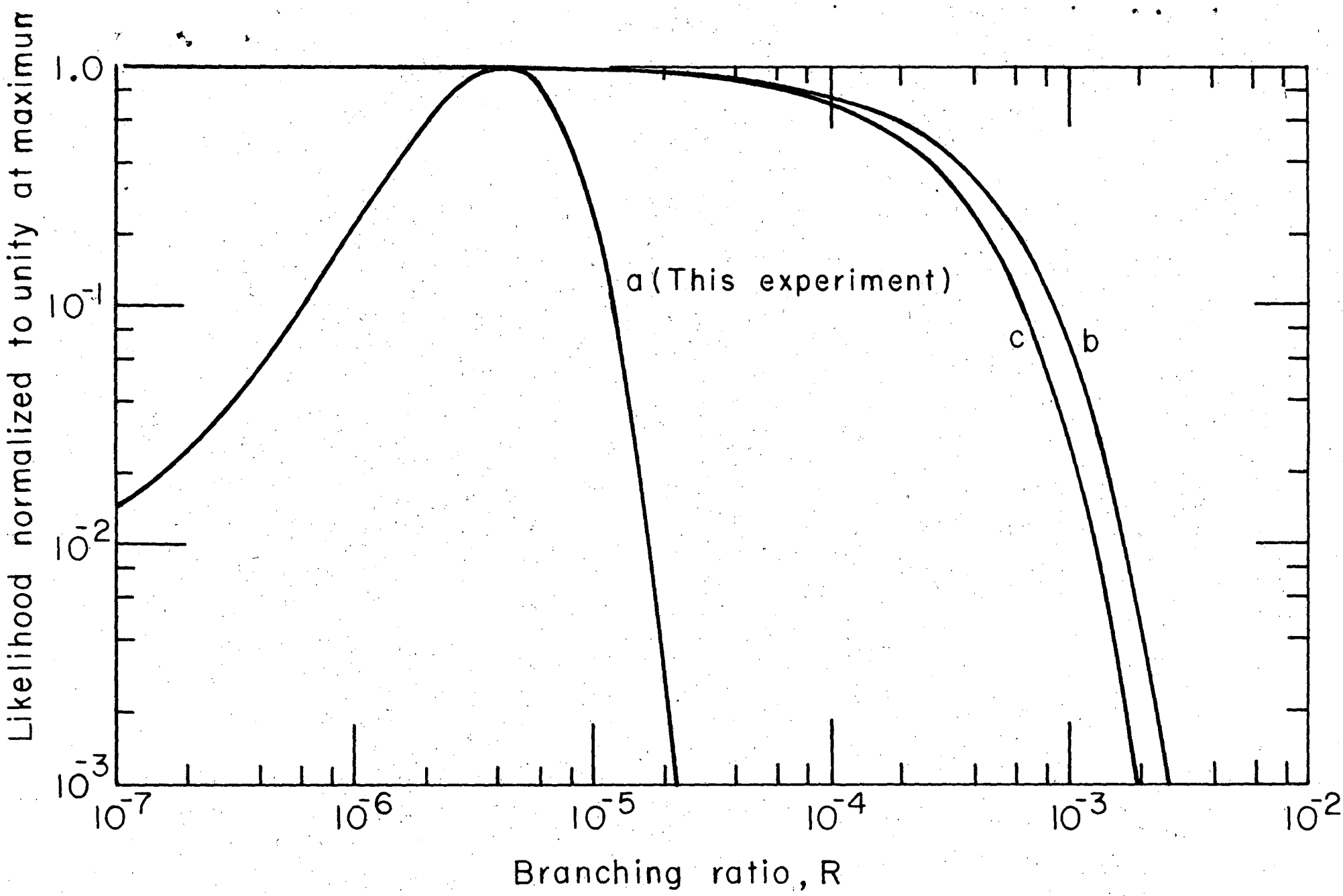

[redacted]

58,012-1

Fig 4