UCRL 9375

UNIVERSITY OF CALIFORNIA

Ernest O. Lawrence Radiation Laboratory

A NEW TRAPEZOIDAL-WAVE ELECTROMAGNETIC BLOOD FLOWMETER AND ITS APPLICATION TO THE STUDY OF BLOOD FLOW IN THE DOG

TWO-WEEK LOAN COPY

This is a Library Circulating Copy which may be borrowed for two weeks. For a personal retention copy, call Tech. Info. Division, Ext. 5545

DISCLAIMER

This document was prepared as an account of work sponsored by the United States Government. While this document is believed to contain correct information, neither the United States Government nor any agency thereof, nor the Regents of the University of California, nor any of their employees, makes any warranty, express or implied, or assumes any legal responsibility for the accuracy, completeness, or usefulness of any information, apparatus, product, or process disclosed, or represents that its use would not infringe privately owned rights. Reference herein to any specific commercial product, process, or service by its trade name, trademark, manufacturer, or otherwise, does not necessarily constitute or imply its endorsement, recommendation, or favoring by the United States Government or any agency thereof, or the Regents of the University of California. The views and opinions of authors expressed herein do not necessarily state or reflect those of the United States Government or any agency thereof or the Regents of the University of California.

UCRL-9375
UC-48 Biology and Medicine
TID-4500 (15th Ed.)

UNIVERSITY OF CALIFORNIA
Lawrence Radiation Laboratory
Berkeley, California

Contract No. W-7405-eng-48

A NEW TRAPEZOIDAL-WAVE ELECTROMAGNETIC BLOOD FLOWMETER AND ITS APPLICATION TO THE STUDY OF BLOOD FLOW IN THE DOG

Howard M. Yanof

(Ph.D. Thesis)

August 25, 1960

Printed in USA. Price $1.75. Available from the
Office of Technical Services
U. S. Department of Commerce
Washington 25, D.C.

A NEW TRAPEZOIDAL-WAVE ELECTROMAGNETIC BLOOD FLOWMETER AND ITS APPLICATION TO THE STUDY OF BLOOD FLOW IN THE DOG

Contents

Abstract 4

I. Introduction 5

II. Theory of Operation 8

III. The Trapezoidal-Wave Flowmeter 13

IV. The Transducer 29

V. Calibration 42

VI. Preliminary Measurements of Blood Flow in the Hind Limb of the Dog 48

A. Experimental Procedure (Total Femoral Flow and Effective Tissue Flow) 49

B. Results (Total Femoral Flow and Effective Tissue Flow) 52

C. Discussion (Total Femoral Flow and Effective Tissue Flow) 53

D. A Study of the Response of the Total Femoral Artery Flow to a Series of Drugs 60

VII. General Discussion 65
VIII. General Summary 68
Acknowledgment 70
References 71

A NEW TRAPEZOIDAL-WAVE ELECTROMAGNETIC BLOOD FLOWMETER AND ITS APPLICATION TO THE STUDY OF BLOOD FLOW IN THE DOG

Howard M. Yanof

Lawrence Radiation Laboratory
University of California
Berkeley, California

August 25, 1960

ABSTRACT

The electromagnetic flowmeter measures the velocity of a fluid moving in a tube or pipe. By constraining the vessel in a sleeve, flow may be measured directly. A magnetic field crosses the tube to the plane of the electrodes. As the ions in the fluid pass the magnetic field, a voltage is induced across the electrodes. This flowmeter is different from existing flowmeters because of the unique trapezoidal wave form that energizes the magnet. This thesis describes the trapezoidal-wave electromagnetic blood flowmeter and compares it with other types of electromagnetic flowmeter. Construction of the transducer elements is discussed. Calibration of the transducer element to measure blood flow in the dog is also discussed.

Preliminary measurements were made of blood flow in the hind limbs of dogs. Total femoral artery flow was compared with the effective tissue flow in two normal anesthetized dogs, and in another dog in response to an infusion of norepinephrine and in response to an injection of epinephrine. Total femoral artery blood flow was also measured after intra-arterial injections of norepinephrine, histamine, procaine, aminophyllin, and Pitressin and intravenous injections of adrenalin and norepinephrine.

I. INTRODUCTION

The instantaneous measurement of the flow of blood through the arteries and veins of animals and man is both interesting and important in physiological biophysics. Many methods have been devised to measure the flow of liquids through tubes, and most of these have now been applied to the measurement of blood flow. The recent exponential growth of the electronics industry has made possible modifications and improvements of early techniques. The electromagnetic flowmeter, initially described in principle by Faraday in 1832,[1] is an example. The first measurements were made by Young et al. in 1920.[2] A successful attempt to measure velocity of flow in tubes was made by Williams in 1930.[3] Use of the instrument for blood flow measurement was then suggested by Fabre, in 1932.[4] First applications of the electromagnetic flowmeter to blood flow were reported independently by Kolin[5] and Wetterer[6] in 1936 and 1937 respectively.

The ideal blood flowmeter can be placed around an intact vessel in the animal and the cables brought through the skin. The blood flow can then be measured with the animal unanesthetized and free to move about without restriction. A small, light-weight transducer has been described by Kolin.[7] The amplifier must be capable of amplifying signals of from 1 to 50 μv with a noise level of less than 0.5 μv referred to the input. The frequency response of the instrument should be flat to at least 200 cps. The instrument must also faithfully record flow signals in spite of annoying potentials present in the surrounding tissues, such as those arising from the heart (EKG).

Originally, two modern electromagnetic flowmeters were considered, one using a sinusoidal wave,[7] the other a square wave,[8] to energize the magnet. Differences in the two varieties of flowmeter are discussed in Section II. It became clear that neither the sinusoidal nor the square-wave flowmeter was ideal. Shirer et al suggested that a clipped triangular wave would solve many problems encountered with previous designs of flowmeters.[8] The author agreed with Shirer

and has designed a flowmeter that uses a clipped triangular or trapezoidal wave. This instrument is shown in Fig. 1.

A physiological application, of interest to the author, was chosen to demonstrate the instument. It may be briefly described as follows: the flowmeter is attached to measure the total flow in the femoral artery of a dog. A small amount of radioactive sodium ($Na^{24}Cl$) is injected into the femoral artery of one leg. The thighs of both legs are continuously monitored with external counters. The radioactive sodium ions rapidly attain equilibrium with the sodium ions in the tissues of the animal, following which an estimate of the flow perfusing the tissues of the hind limb can be made. This estimation is, however, based on several assumptions which are discussed later. This effective tissue flow was estimated in two normal anesthetized dogs and in one dog receiving first norepinephrine, then epinephrine.

The changes in total femoral blood flow, as measured with the flowmeter, were measured in one dog in response to histamine, norepinephrine, epinephrine, adrenalin, aminophylline, procaine, and Pitressin. The response to norepinephrine was compared when injected intra-arterially and intravenously.

ZN-2531

Fig. 1. Trapezoidal-wave electromagnetic blood flowmeter: (left) panel view; (right) rear view.

II. THEORY OF OPERATION

In the operation of the electromagnetic flowmeter, a current energizes the magnet coils, as shown in Fig. 2. A magnetic field perpendicular to the vessel results.

The energizing current may be sine wave, square wave, trapezoidal wave, or some other time-variable shape. The importance of the wave shape is discussed later. The flow of fluid through the vessel induces a voltage across the electrodes, which are perpendicular to the field and to the vessel. This voltage is a measure of the velocity of the fluid in the vessel. Since the vessel is held to a specific diameter, the flow measured in units of volume per unit time can be recorded directly.

The electromotive force E induced in the electrode circuit may be explained as follows:

$$E = \frac{dW}{dq} \text{ , where } W \text{ is work, and } q \text{ is charge,} \tag{1}$$

hence

$$dW = E\,dq \text{ ,} \tag{2}$$

and

$$dW = F\,ds \text{, where } F \text{ is force, and } s \text{ is distance.} \tag{3}$$

But

$$ds = v\,dt \text{ , where } v \text{ is velocity, and } t \text{ is time,} \tag{4}$$

therefore

$$E\,dq = Bli\,v\,dt \text{ , where } i \text{ is current,} \tag{5}$$

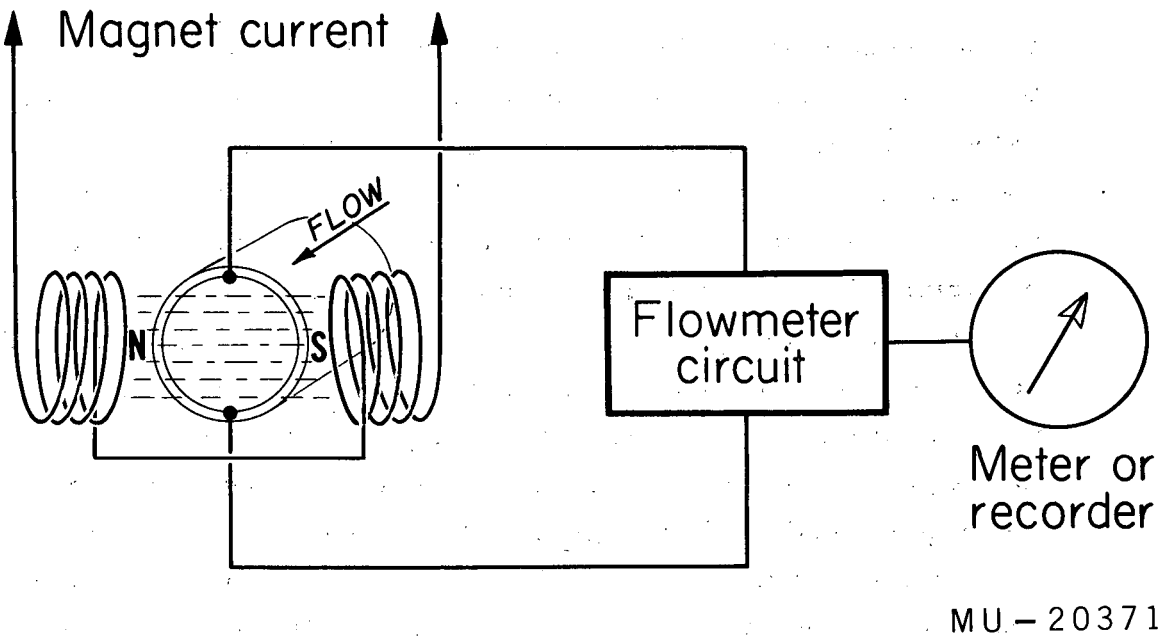

Fig. 2. Principle of electromagnetic induction.

$$E \frac{dq}{dt} = Blv\,i\,, \tag{6}$$

$$E\,i = Blv\,i\,,$$

and

$$E = Blv\,. \tag{7}$$

It may be seen from Eq. (7) that the signal voltage E is proportional to the magnetic field, B, the diameter of the vessel, l, and the velocity of the fluid, v. Note that the conductivity of the material in the vessel does not appear in Eq. (7). In theory, the generation of the flow signal is not influenced by the conductivity of the flowing material. If the fluid had a low conductivity, then the path between the transducer electrodes would have a very high impedance. An amplifier which had an infinite input impedance could measure the full magnitude of the generated flow signal. It is, however, impossible to design such an amplifier. Since the input impedance is not infinite, there is a division of the signal, some being lost at the source and some being transferred to the input amplifier as usable signal. In practice, if the input impedance is sufficiently high, and the fluid is ionized to some extent, the flow signal varies only a few percent over a wide range of conductivities.[10, 11]

If the magnet current varies with time, the signal voltage also varies with time. For a sinusoidal magnet current, the signal voltage may be expressed

$$E = lv\,(B_{peak} \sin \omega t).$$

It follows that when the magnetic field B varies with respect to time, the resultant signal voltage at any instant is proportional to the velocity of the flow and to the magnetic field at that instant. The output of the probe has been expressed by Kolin[9] as

$$V = d\,(\mu H_0 \sin \omega t)\;v - (A_0 \cos \omega t) \times 10^{-8} \text{ volt},$$

where $(\mu H_0 \sin \omega t)$ is the instantaneous magnetic flux density, d is the diameter of the flowing stream (in cm), v is the mean (cross-sectional) velocity (in cm/sec), and $(A_0 \cos \omega t)$ is the instantaneous transformer component. Component $(A_0 \cos \omega t)$ is an induced voltage due to a coil of wire enclosing a time-variable magnetic flux. This induced voltage is proportional to the rate of change of the flux (dB/dt). It may be noted that (at least in theory) this transformer component could be eliminated by carefully positioning the leads of the probe so that they enclose zero net flux. However, other methods seemed more practical.

A method used by Kolin and others was to discriminate against the transformer component by using a phase-sensitive detector or a similar gating scheme. The gate opens for transmission of signal when the magnet current—and therefore the magnetic field—is at a maximum.

Because of the 90-deg displacement of the transformer component of the signal with respect to the magnet current, the transformer component is zero when the gate is open for transmission (provided the gate time is extremely short). If, as is usual, the gating-time duration is approximately 10% of the total period of a cycle, the transformer voltage is crossing the zero axis and the net average voltage due to the transformer action is zero.

Another way to eliminate the transformer component is to use a square-wave magnet current. During the rise and again at the fall of the square wave there is a transformer component that tends to be extremely large for a short time. If the gate is opened only during that part of the square wave which has zero slope, there is no transformer component, and a pure flow signal is sampled. However, there is a tendency for the infinite, instantaneous transformer component to overload the amplifier, and the author considers this a serious obstacle to the use of the square wave. Shirer et al discuss the square-wave electromagnetic flowmeter at length.[8]

A third approach is to use a sinusoidal magnet current and to add a voltage to the output of the probe. This added voltage should be equal in magnitude but 180 deg out of phase with the transformer component. A complete discussion of this method has been published by Hogg, Mittelmann, and Schover.[10]

It was proposed that a trapezoidal magnet current be used. The trapezoidal wave gives rise to a finite transformer component during the rise and fall of the trapezoidal wave, but there is no transformer component signal during the zero-slope portion of the curve. The development of this system of measuring flow is presented as the main subject of this thesis.

III. THE TRAPEZOIDAL-WAVE FLOWMETER

Figure 3 is a block diagram of the flowmeter. It consists of a wave-form generator, a magnet-current amplifier, and a flow-signal amplifier and demodulator.

The function of the wave-form generator is to provide a trapezoidal wave form to the magnet-current power amplifier and to supply the rectangular pulses that open the gate in the output amplifier of the flow-signal amplifier and demodulator. The schematic diagram of the wave-form generator is shown in Fig. 4.

The output of a cathode-coupled multivibrator operating at 1000 cps is amplified and then clipped with zener diodes to provide a square wave. This square wave is then integrated, yielding a triangular wave. When this wave is clipped, the desired trapezoidal wave results. The triangular wave is also used as an input to a Schmitt circuit. The Schmitt circuit (cathode-coupled binary circuit) provides a negative- and positive-going gate-drive pulse. The Schmitt circuit is triggered at a level above the limiting voltage of the zener diodes. This is necessary to open the gate during the time when the trapezoidal wave form has a zero slope. It was necessary to delay the gate-drive pulses somewhat, to compensate for a finite time delay of the flow signal in the input amplifier of the flow-signal amplifier and demodulator. Figure 5 shows wave forms produced at significant points in the wave-form generator.

Figure 6 is a photograph of the printed-circuit-board layout of the wave-form generator.

The magnet-current amplifier is a transistorized power amplifier, shown schematically in Fig. 7. Power transistors are especially well suited for this application, being basically low-voltage high-current devices. The amplifier was originally designed as an audio amplifier for the 72-inch bubble chamber at the Lawrence Radiation Laboratory by Mr. Robert Sorensen, Electronics Engineer.

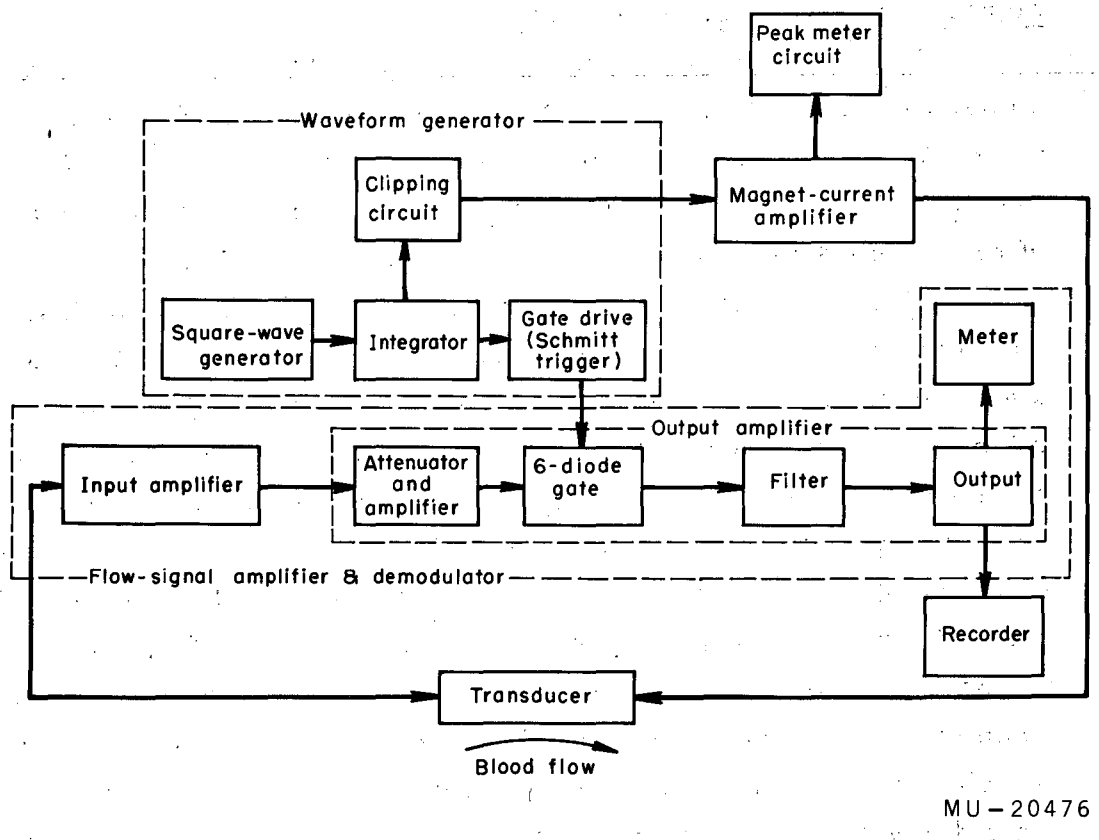

Fig. 3. Functional block diagram of the trapezoidal-wave flowmeter.

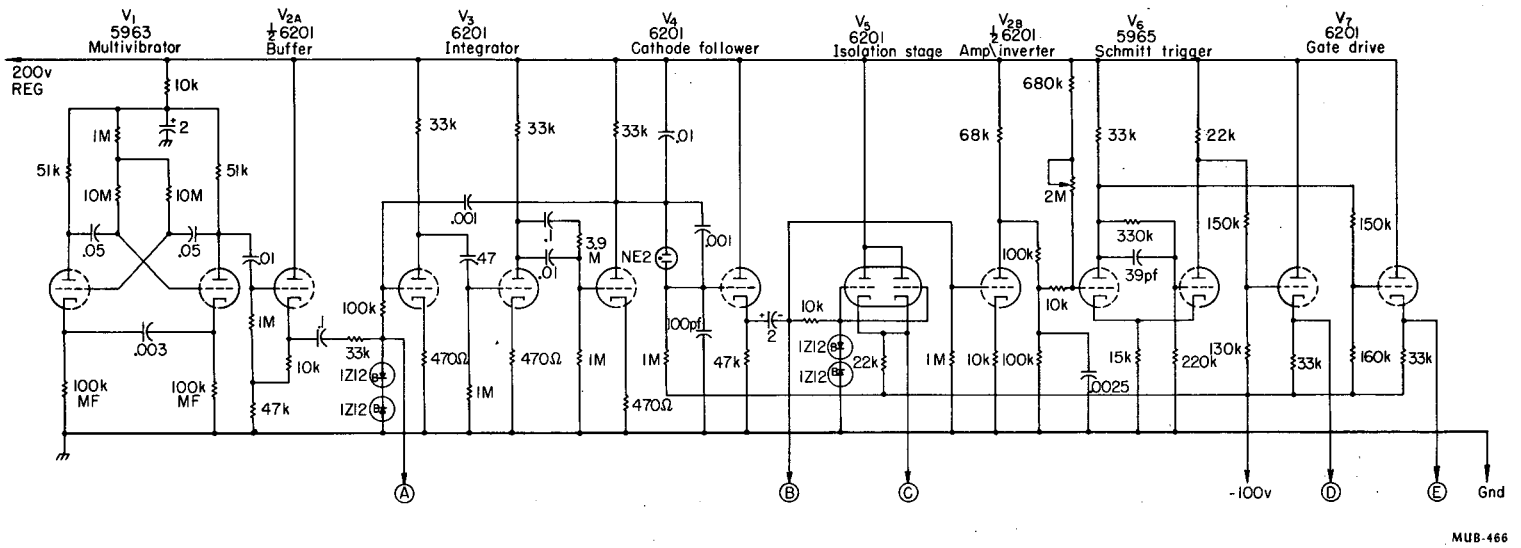

Fig. 4. Wave-form generator circuit. A, B, C, D, and E refer to wave forms in Fig. 5.

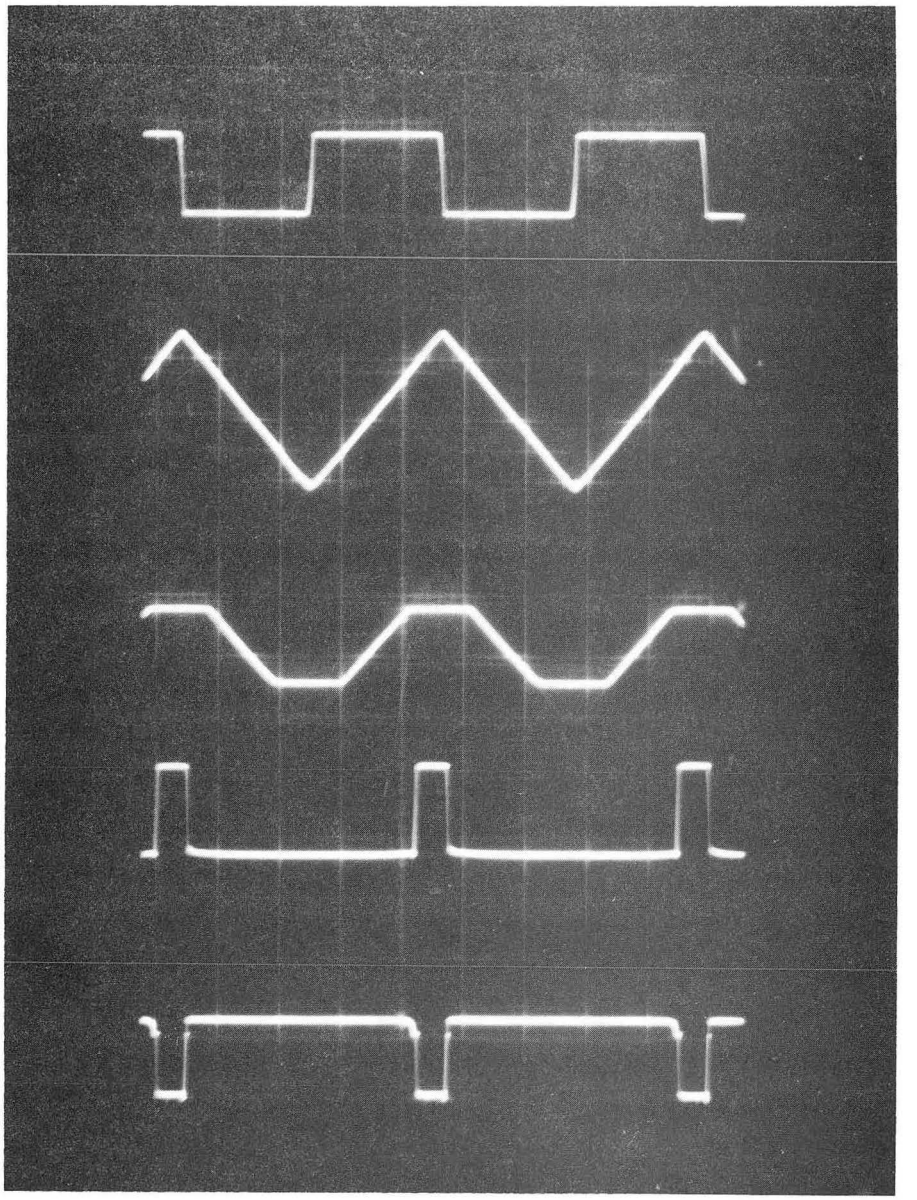

ZN-2533

Fig. 5. Wave forms of functional components in the wave-form generator. Here A is the output of the square-wave generator, B is the integrated square wave, C is the clipped, integrated square wave, D is the positive-going gate-drive pulse, and E is the negative-going gate-drive pulse.

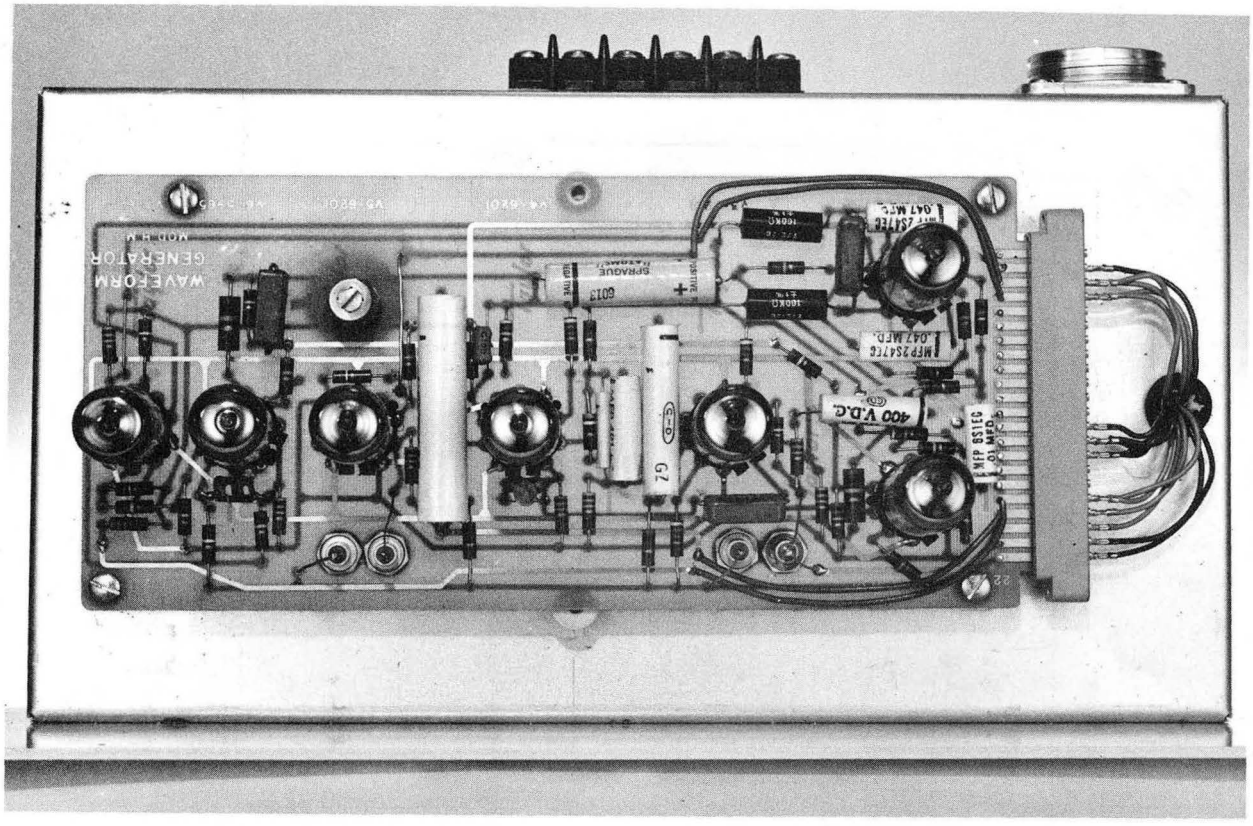

ZN-2526

Fig. 6. Wave-form generator printed circuit.

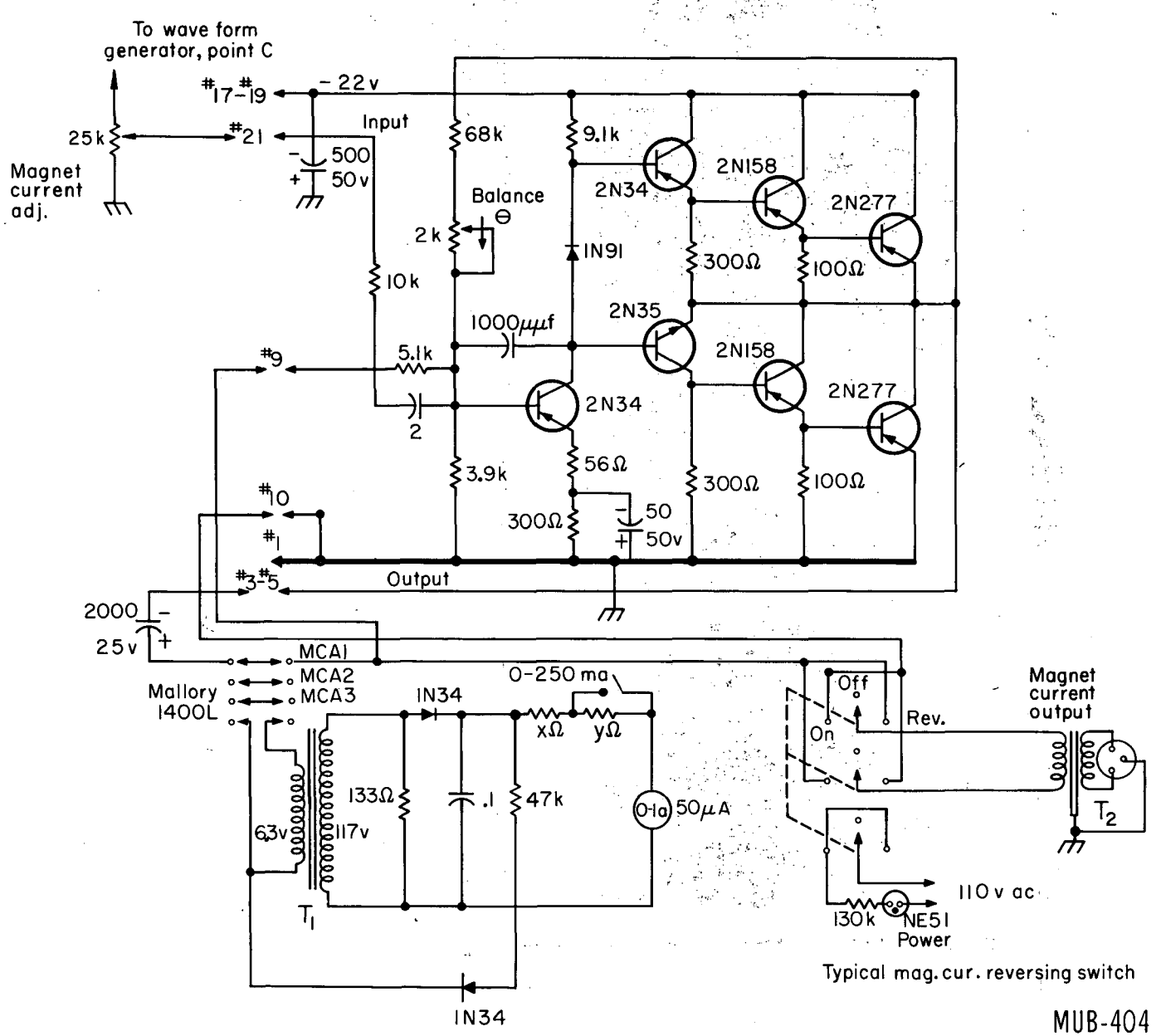

Fig. 7. Magnet-current amplifier circuit. Here T_1 is a UCRL-P 6134 transformer, and T_2 is a Triad - TY 67 A transformer.

The amplifier is coupled to the cathode-follower trapezoidal-wave output of the wave-form generator. Feedback is utilized for current stabilization of all stages. The feedback system also stabilizes the voltage division across the power output of the two 2N277 transistors, which operate in a class-B push-pull arrangement. The pair of 2N158 transistors and the 2N34 and 2N35 transistors in the preceding stage also operate as class B. The two 2N277 transistors have a small forward bias, set by the voltage drop across the 100-ohm resistors, to minimize crossover distortion. This is also accomplished in the preceding stages with the 300-ohm resistors and with the 1N91 diode. The 1N91 germanium diode is used instead of a resistor for biasing to compensate for temperature variation in the emitter-base resistance. The input amplifier, a 2N34, operates as class A. It should be noted that the 2N277 power transistors must be mounted on an adequate heat sink.

The output of the power amplifier is measured as "peak"* magnet current by using the circuit shown in Fig. 7. A reversing switch is provided to insure that a positive-flow signal will cause an upward deflection on the recorder. The output of the amplifier is transformer-coupled to the magnet of the transducer. This is done so that the center tap of the magnet coil will be at ground potential, and also to facilitate impedance matching.

This power amplifier and the output transformer faithfully provide a 1-amp trapezoidal current to the magnet coil of the transducer. If the transducer is properly made, during the zero-slope portion of the trapezoidal wave there will be no transformer component induced by the electrodes and connecting leads supplying the the flow signal to the input amplifier. Figure 8 is a photograph of the printed-circuit layout of the magnet-current amplifier.

---

*Peak is defined here as the maximum positive magnitude of a wave measured from the average value of that wave (i.e., the dc component).

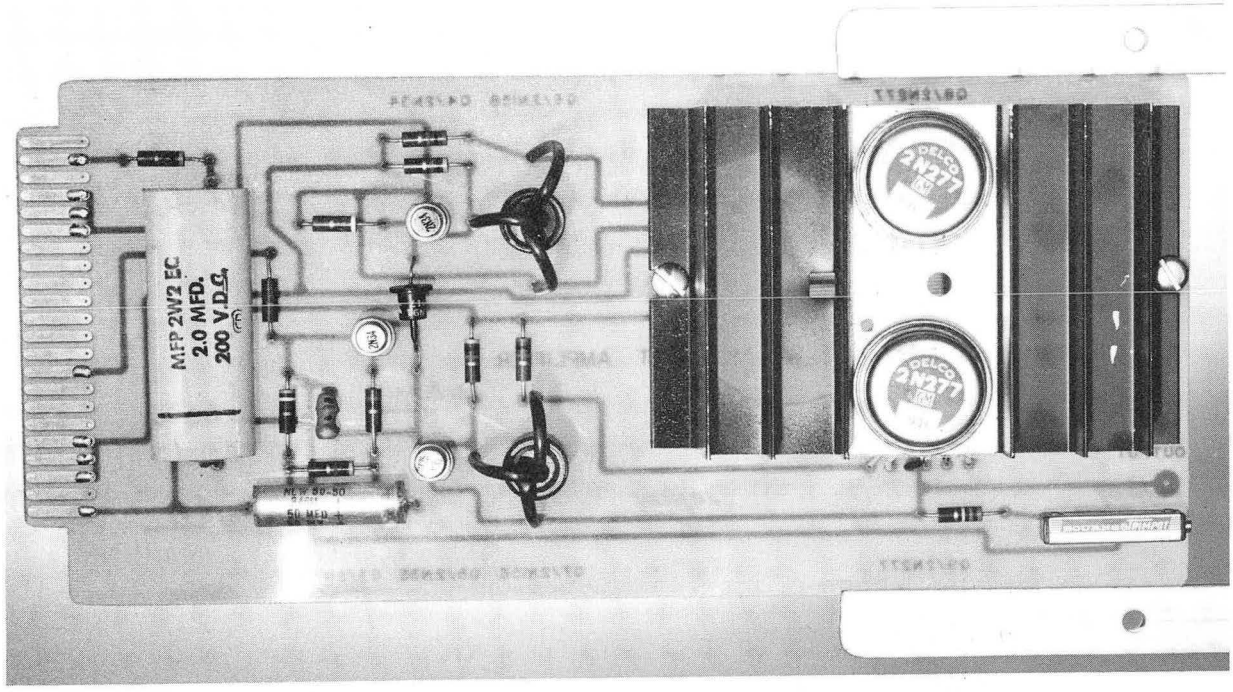

ZN-2527

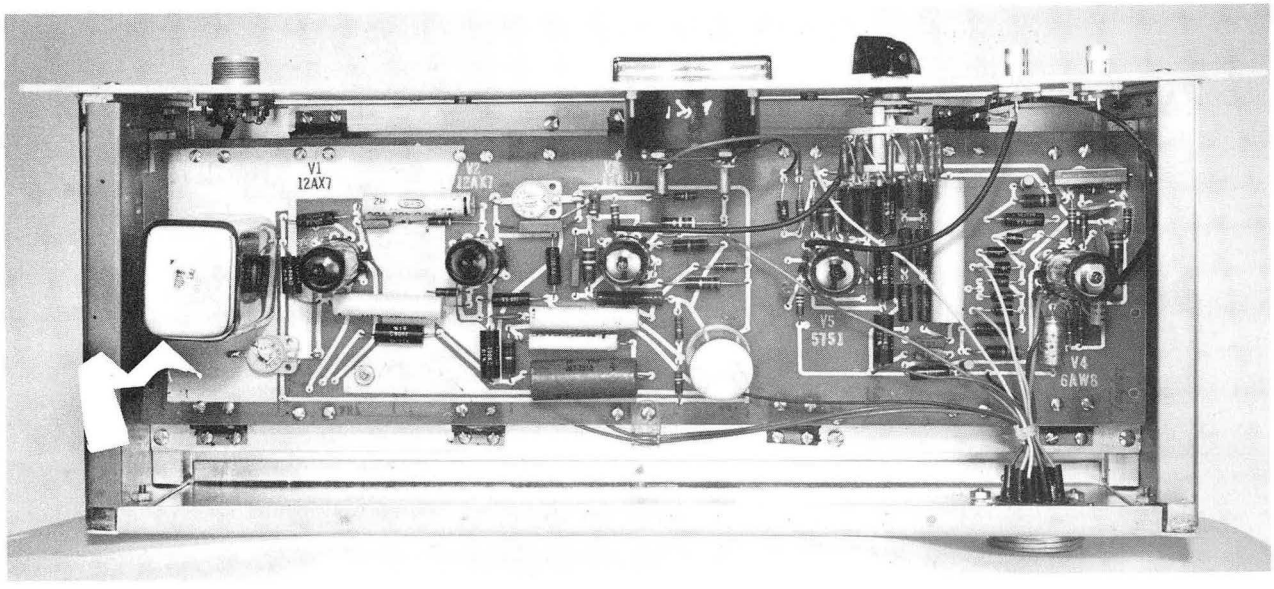

ZN-2528

Fig. 8. Magnet-current amplifier.

Fig. 9. Flow-signal amplifier and demodulator printed circuit.

For this discussion the flow-signal amplifier and demodulator has been arbitrarily divided into two parts: input and output amplifiers. The entire unit amplifies the flow signal, which is of the order of magnitude of 1 to 50 μv peak, then demodulates the signal and provides a low-impedance output signal adequate in magnitude to drive a recorder directly.

Many circuits were considered for the input amplifier. The ideal must have a noise level (shorted input, referred to the input) of less than 0.1 μv. The author chose to use a modified Tektronix type-122 low-noise preamplifier as the input amplifier. In 1955, Brophy suggested several improvements in the circuitry of the Tektronix-122 to lower the equivalent noise at the input to 0.5 μv.[12] Brophy replaced all plate and cathode resistors in the first two stages with noninductive wire-wound resistors. The second-stage 12AU7 was changed to a 12AX7, necessitating that its cathode resistor be changed from 100 to 200 ohms. He also connected the heaters of the first two stages in series, to halve the heater current. Brophy reported that with these changes, the over-all gain of the amplifier is increased from 1000 to 2800, the high-frequency cutoff is reduced from 40 to 20 kc, and the maximum undistorted input signal is 10 mv peak-to-peak.

The author replaced all plate and cathode resistors with metal film resistors, changed the second stage to a 12AX7, lowered the heater potential as described above, and in addition used a Triad G-10 Geoformer as an input transformer. The use of the Geoformer provided an additional gain of about 40 before the first stage. The circuit was then built on an etched board as shown in Fig. 9. The amplifier now has an input impedance of approximately 600 ohms, a gain of more than 100,000, and an equivalent input noise of 0.008 μv with the input terminals shorted. It is shown schematically in Fig. 10.

The zero-slope portion of the trapezoidal wave form remains flat at the output of the input amplifier.[13] There is, however, a finite delay in the flow signal. For this reason, the gate-drive pulses were delayed in the wave-form generator. Note that a large common-mode

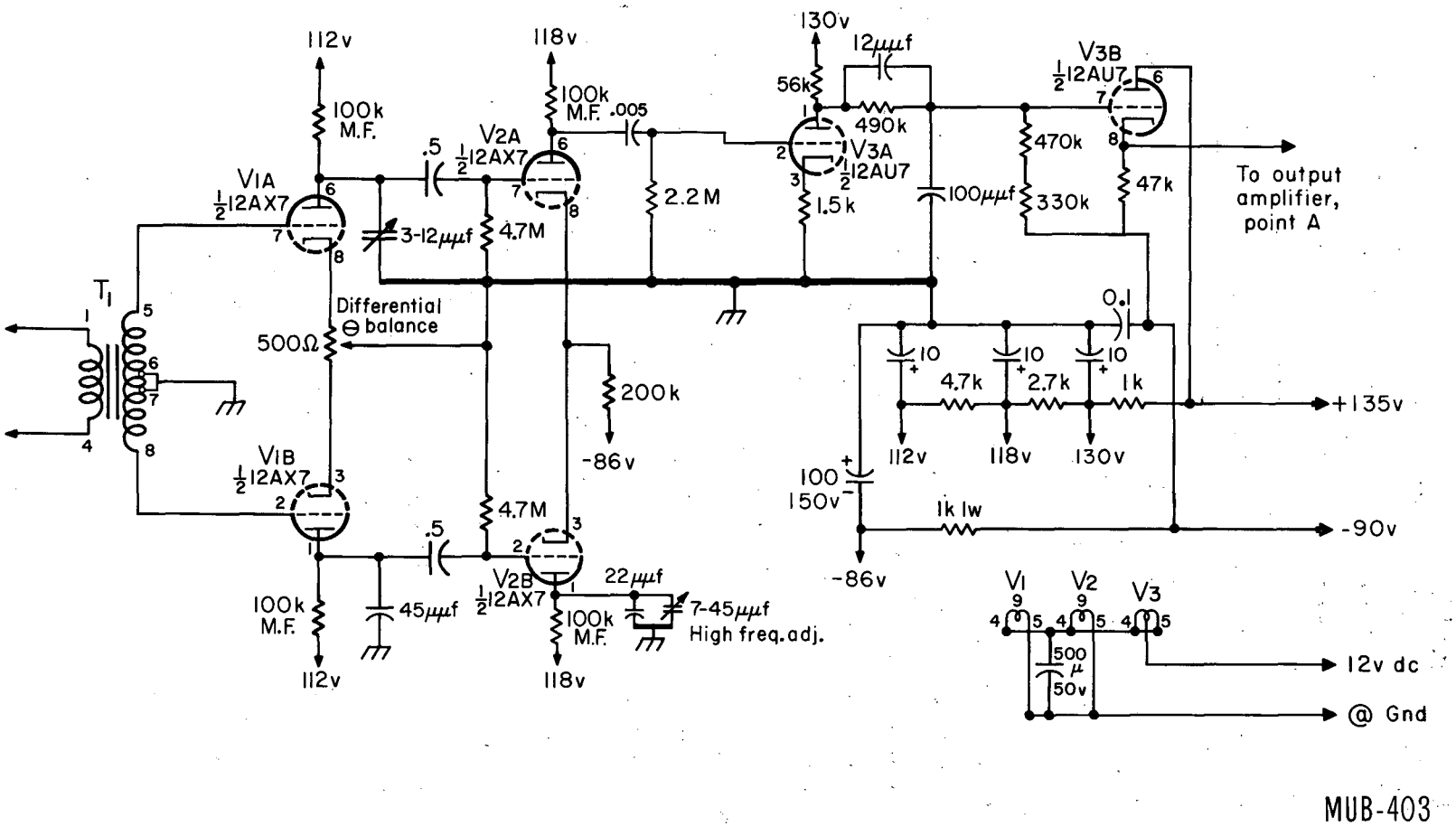

Fig. 10. Input-amplifier circuit. Here T_1 is a Triad G-10 Geoformer.

signal will swamp the amplifier, and therefore, two halves of the magnet coil must be balanced. This will be discussed further in the next section (Transducers).

The signal is coupled to the output amplifier through a variable attenuator and amplified by a conventional pentode amplifier. The flow signal is then demodulated with a six-diode gate. The gated signal is filtered with a twin tee to eliminate most of the 1000-cycle component. The signal is coupled to a negative-feedback-stabilized dc-coupled amplifier. The first half of the tube is used as an amplifier. The other half is a cathode follower which provides a low-impedance output. The output-signal magnitude is monitored on a panel meter. A schematic of the output amplifier is shown in Fig. 11. The printed circuit layout of the flow-signal amplifier and demodulator is shown in Fig. 9. The completed unit is shown in Fig. 12.

The six-diode gate was chosen because it would allow linear bilateral transmission with a gain of almost unity. It is therefore possible to charge as well as discharge the storage capacitor connected to the output of the gate. This storage capacitor holds the signal between sampling cycles of the gate. Operation of the gate is discussed by Millman and Taub.[13]

The flow-signal amplifier and demodulator has an over-all gain of about 200,000; therefore, it is possible to use very small transducer elements. The smaller the transducer element, the easier it is to implant it and still maintain the animal's physiological status.

The power supply for the flowmeter is a modified U.S. Navy preferred circuit, number 8.[14] It supplies voltages of +200, -100, -90, and +135, all regulated to less than 1%. The power supply shown schematically in Fig. 13 supplies power for the entire flowmeter, except the magnet-current amplifier and the heaters of the input amplifier. A transistorized power supply (Lawrence Radiation Laboratory No. 7V-2853) supplies -22 v to the magnet-current amplifier and +12 v to the input amplifier. The schematic diagram for the transistorized power supply is shown in Fig. 14 and its printed-circuit layout is shown in Fig. 15.

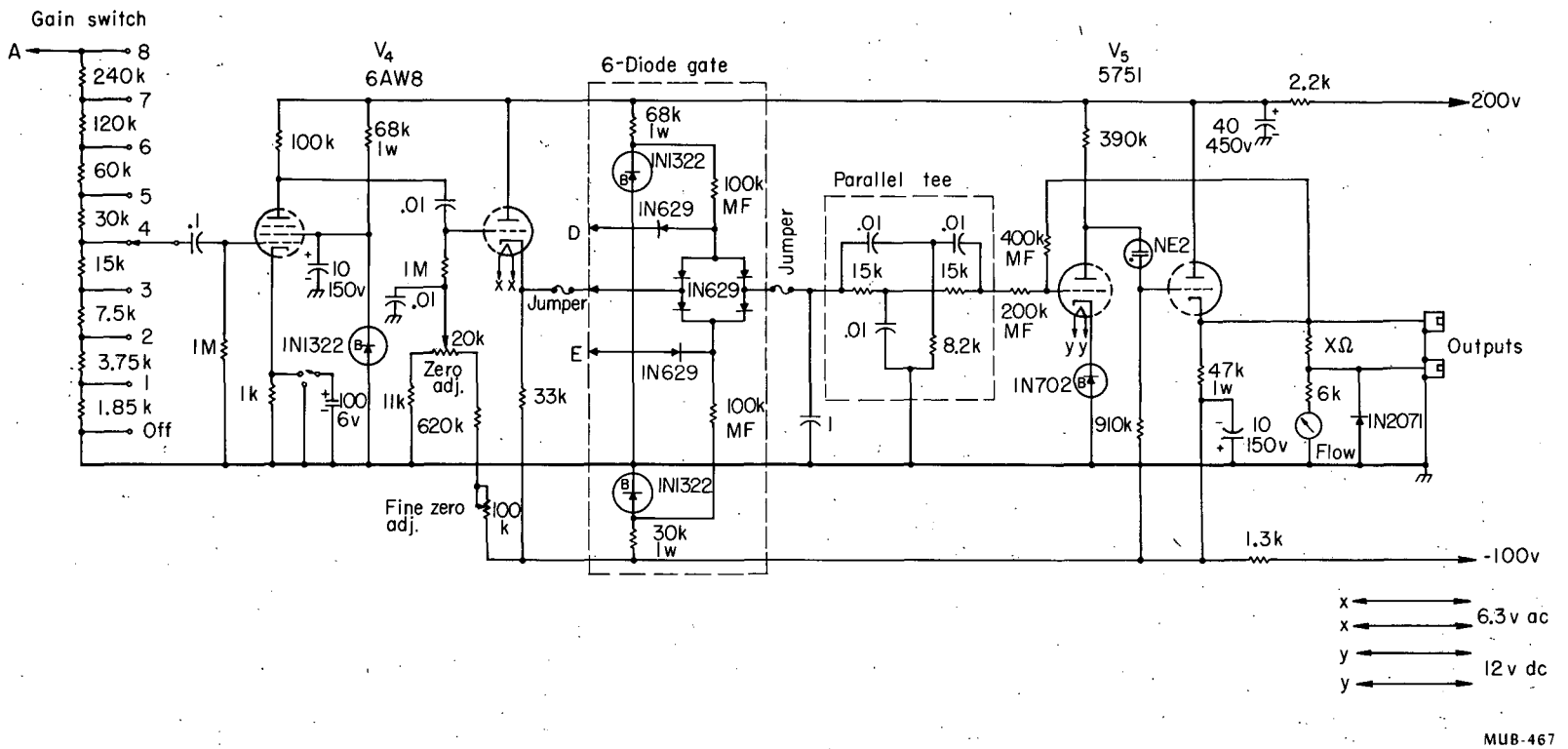

Fig. 11. Output-amplifier circuit.

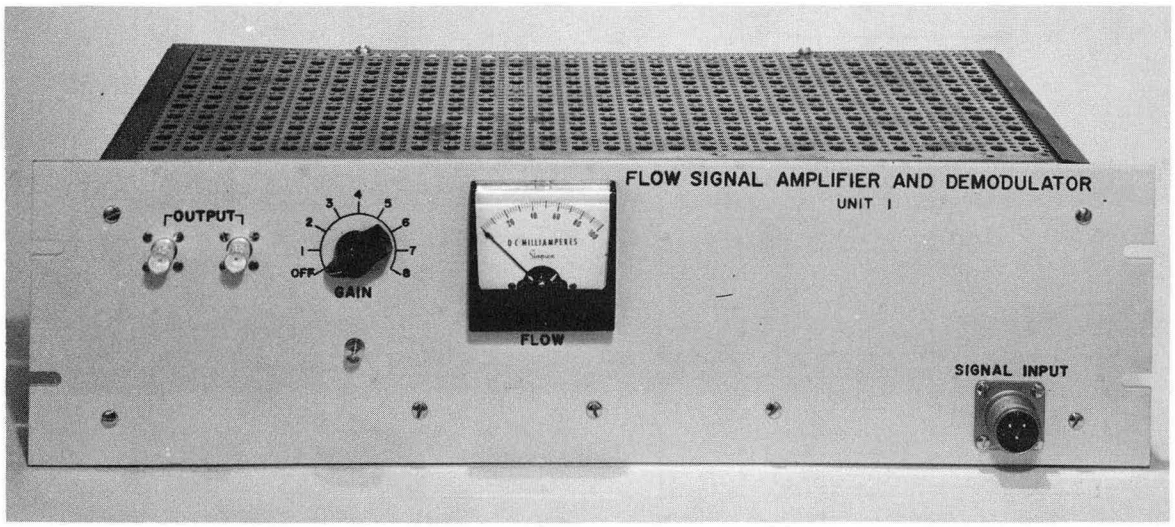

ZN-2529

Fig. 12. Flow-signal amplifier and demodulator.

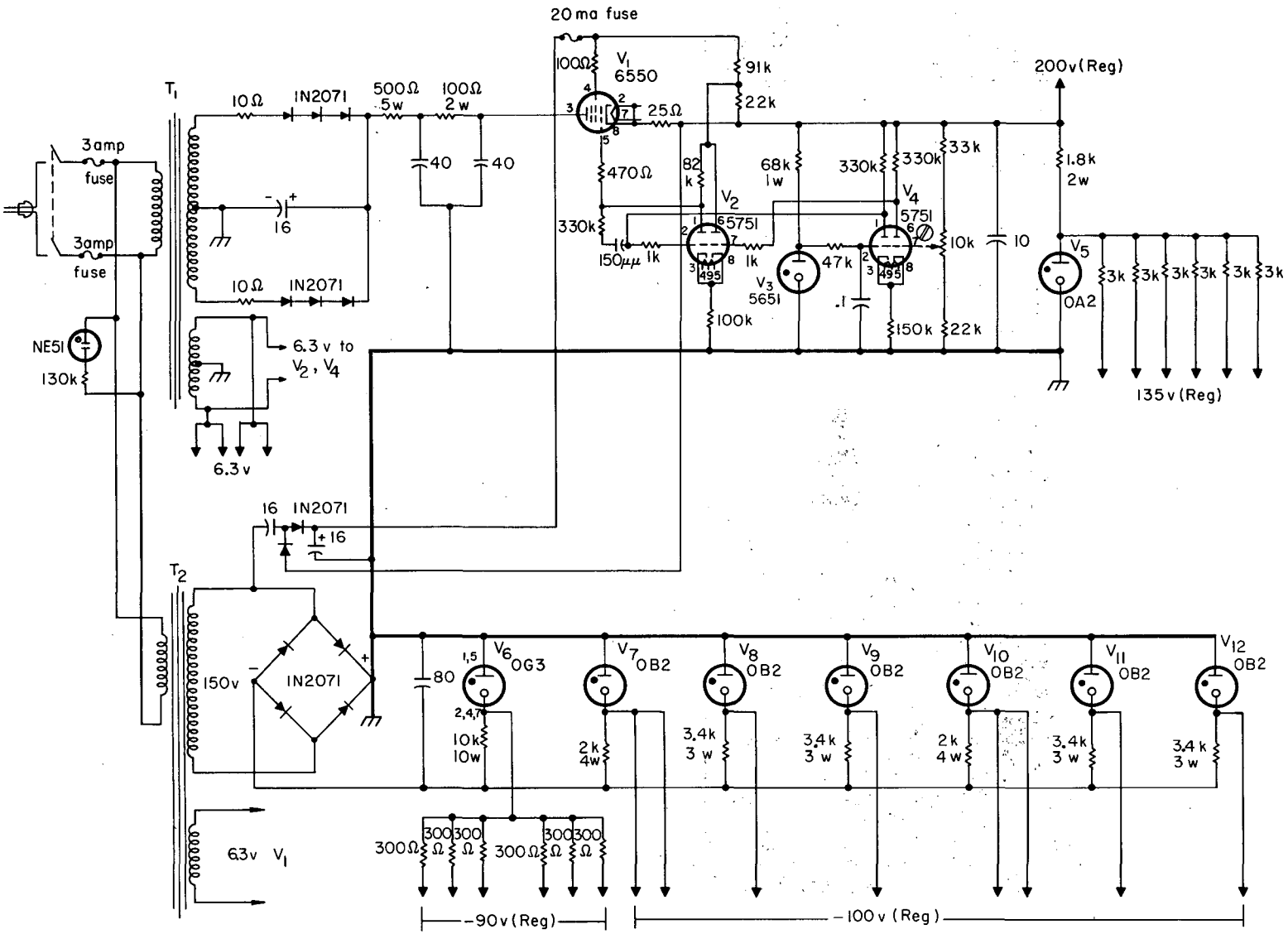

Fig. 13. Main power circuit. Here T_1 is a Thorardson 22R06 transformer, and T_2 is a UCRL-1167 transformer.

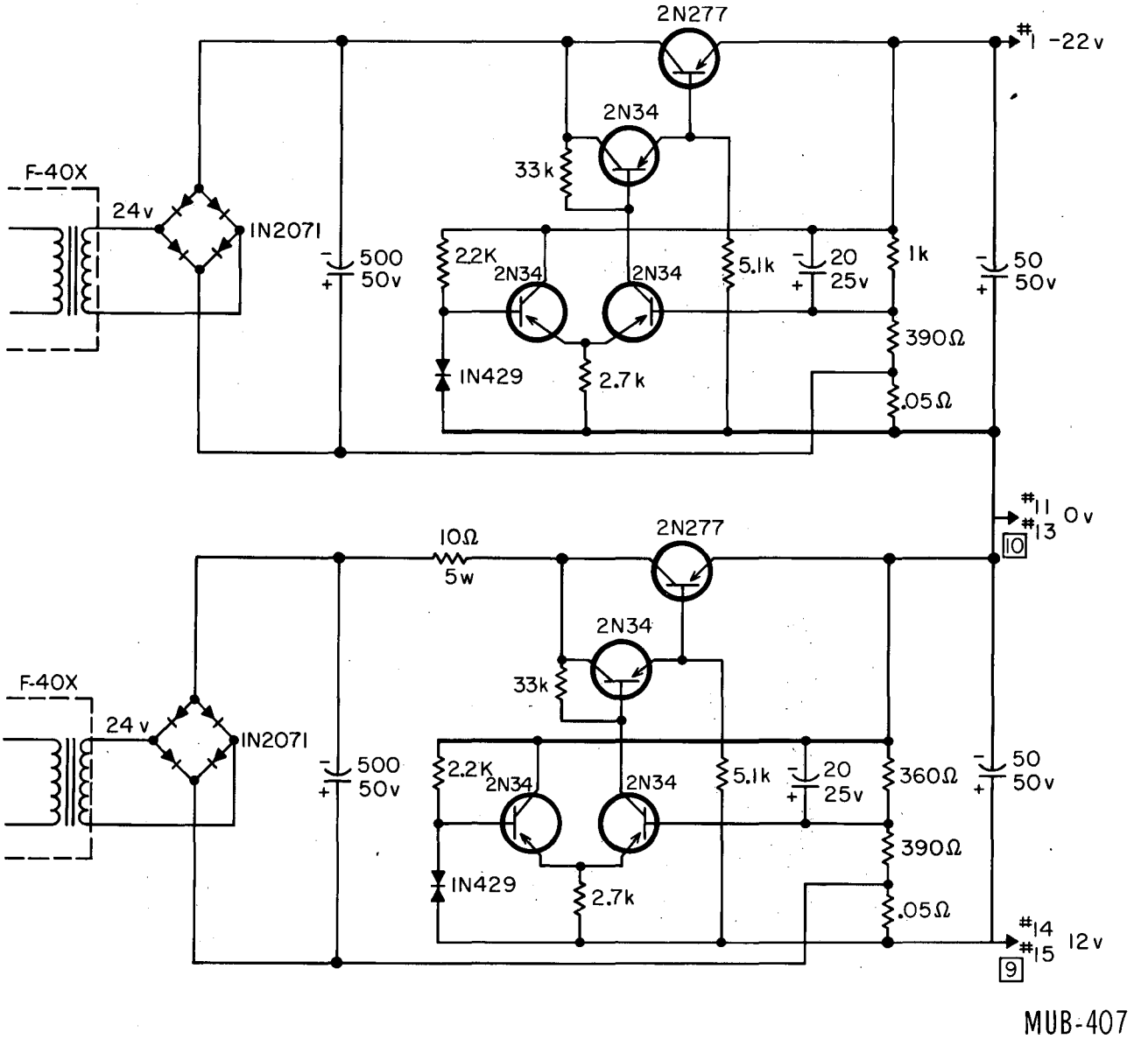

Fig. 14. Transistorized power-supply circuit.

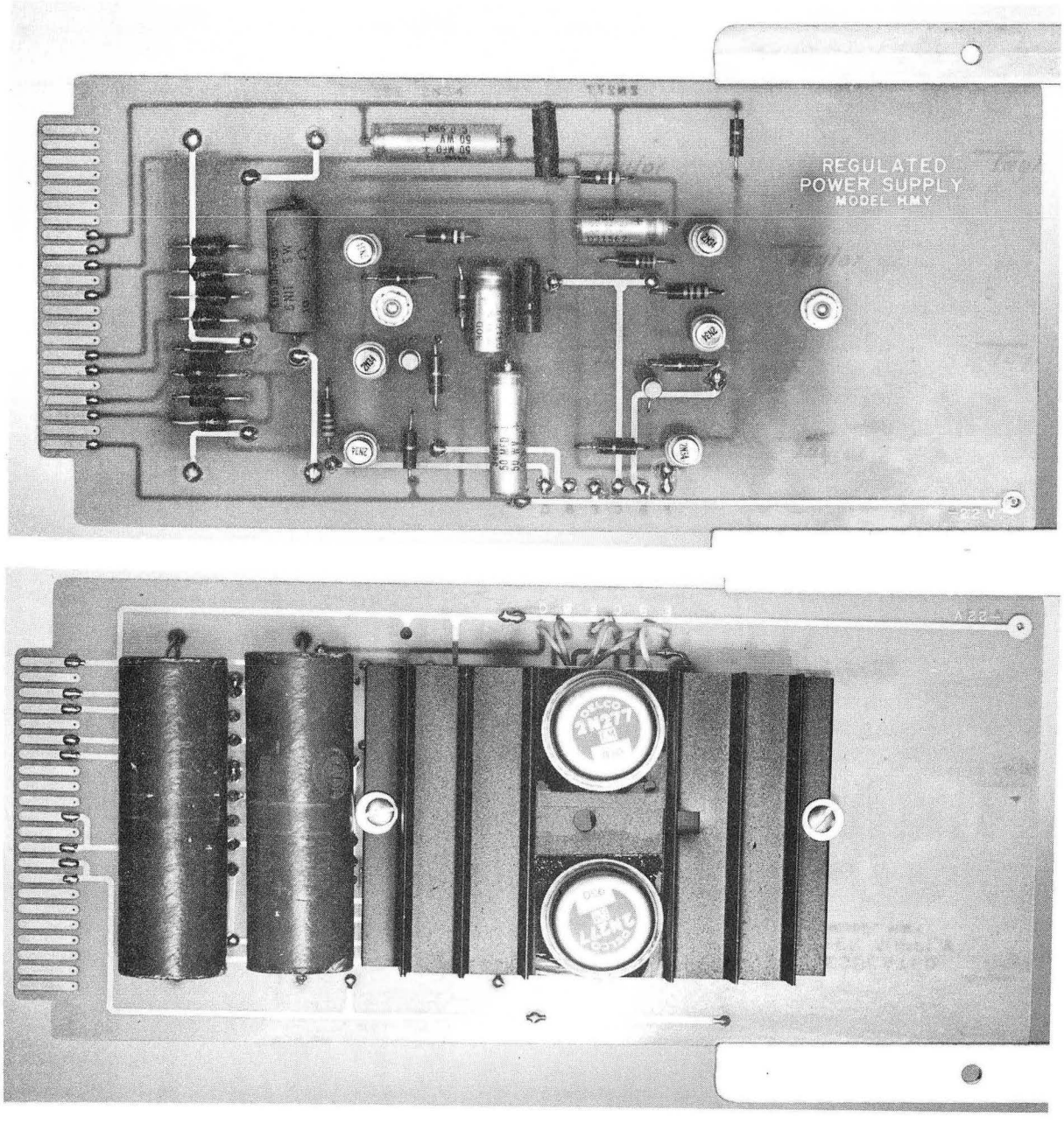

ZN-2530

Fig. 15. Transistorized power supply, top and bottom views.

IV. THE TRANSDUCER

The flowmeter transducer generates a voltage analog of the blood velocity in an unopened artery. Because the artery is constrained to a constant diameter by a hard plastic sleeve, the voltage signal recorded is, upon calibration, a direct measure of flow (volume per unit time). The transducer element is one of the most important parts of the flowmeter and is the most difficult to construct.

A variety of designs for transducers have been used in the history of electromagnetic flowmeters. This discussion is limited to only some of the miniature transducers. The problems that one expects to encounter in the design of a transducer are especially critical when the magnet is energized with sine-wave voltage. Figure 16 illustrates diagramatically one of the basic problems of the sine-wave flowmeter. If we consider the blood in the artery as the source impedance, we can represent the input signal as having originated from two generators—a true flow signal, and a transformer component generator. The capacitors represent stray capacitance existing between the coil halves and between each half of the coil and ground. If the source impedance changes, even slightly, the phase of the transformer component also changes. In this case, the phase-discriminating gating circuit, adjusted for a prior condition, now allows some transformer component as well as flow signal to appear in the output as flow signal. This effect appears to be more obvious when blood is flowing through the transducer than when saline solution is used.

Figure 17 shows two transducers designed for the sine-wave flowmeter.[15] These are the smallest transducers that have been described to date. The electrode leads must lie entirely in a plane that is at 90 deg to the magnetic field in order to minimize the transformer component. This appears to be extremely difficult to achieve, since the electrode leads and magnet coils are secured simultaneously, and testing is not possible until assembly is complete. The two halves of the magnet coil must also be balanced so that the area adjacent to

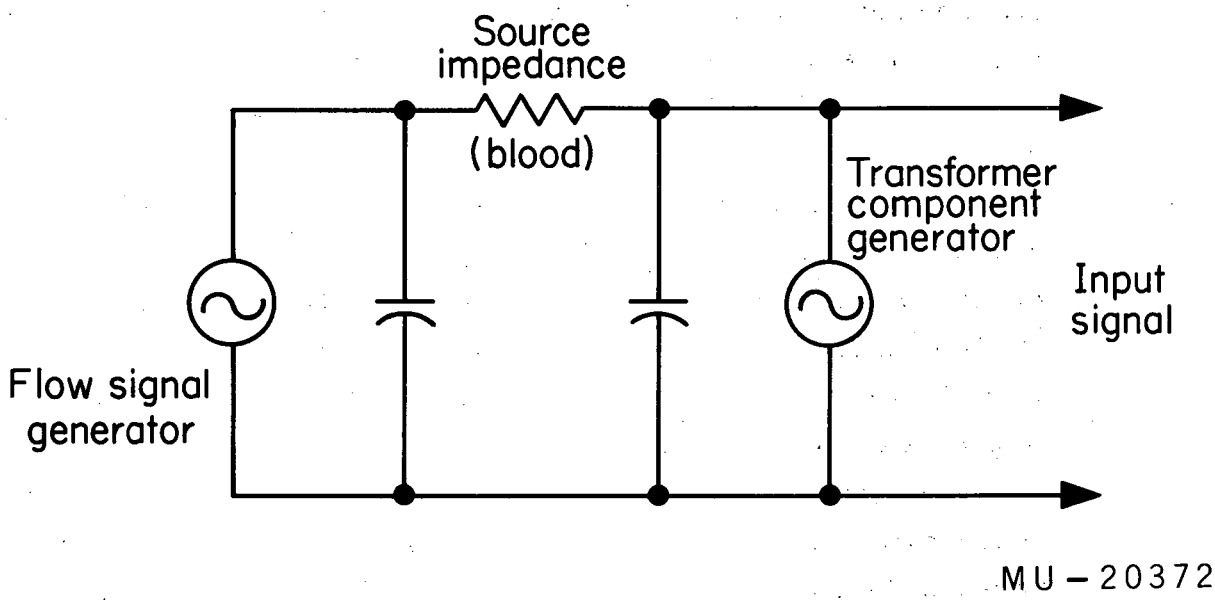

Fig. 16. Analog of sine-wave transducer.

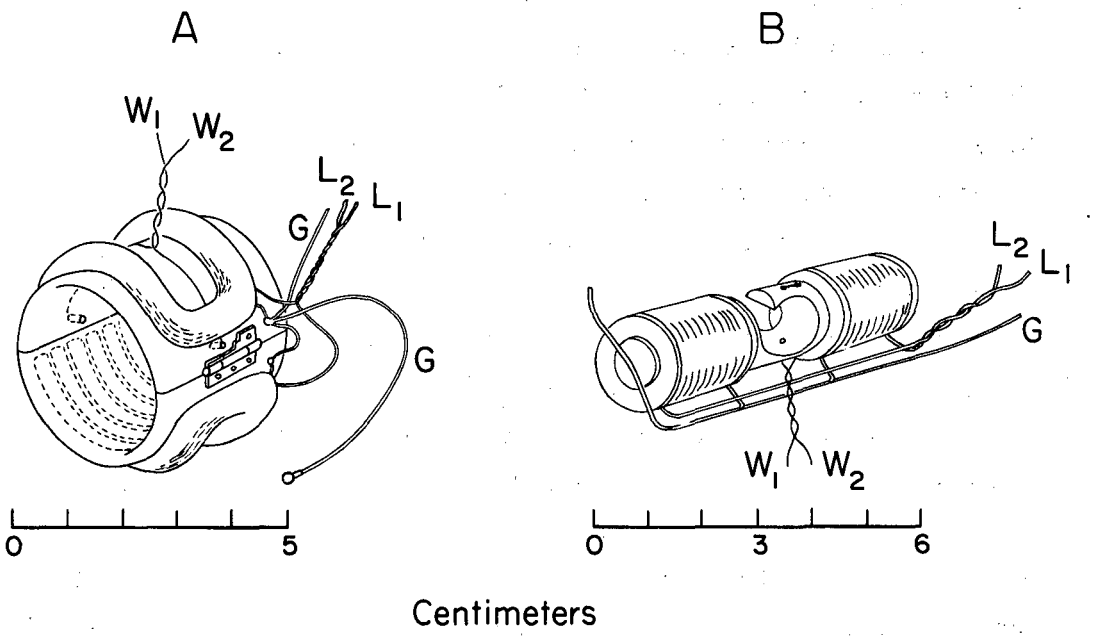

MU-20373

Fig. 17. Transducers designed for the sine-wave flowmeter.

the electrodes (center tap) is, essentially, at ground potential. Otherwise, a large common-mode signal will result which will overload the input amplifier.

Figure 18 shows three other transducers designed for the square-wave flowmeter.[16] The author has had no practical experience with these designs. Two observations are in order, however, The ferrite cores used in these transducers may cause more distortion of the field than an air core. In addition, these transducers are too large to be chronically implanted. It should be noted that in fact these transducers are not being so used.

If the gating circuit samples the flow signal during the zero-slope portion of either the square or trapezoidal wave, there should be no transformer component in the output. Since the transformer component is the first derivative of the current in the magnet coil, it follows that the transformer component for the trapezoidal wave is as shown in Fig. 19. Theoretically, it is a positive- and negative-going square pulse that occurs each cycle. In practice, however, the electronic circuitry that must be used causes the rise and fall of the transformer component to be exponential. In the trapezoidal-wave flowmeter, the transformer component is essentially zero during the time the gate is open for transmission of signal.

A similar analysis would also apply to the sine-wave and square-wave flowmeters as shown in Fig. 19. The transformer component for the sine wave is another sine wave displaced, theoretically, 90 deg from the magnet current. Disadvantages of the sine-wave flowmeter have been discussed. The transformer component for the square wave is an extremely large spike. Although this spike may be limited or eliminated by the blanking circuitry, in practice there is also an exponential rise and decay for this transformer component. Considerable difficulty would be expected in trying to eliminate all traces of the transformer component, since the component associated with the square wave is very large, and since the blanking circuitry follows the input amplifier. One would expect that the gate could be open only a

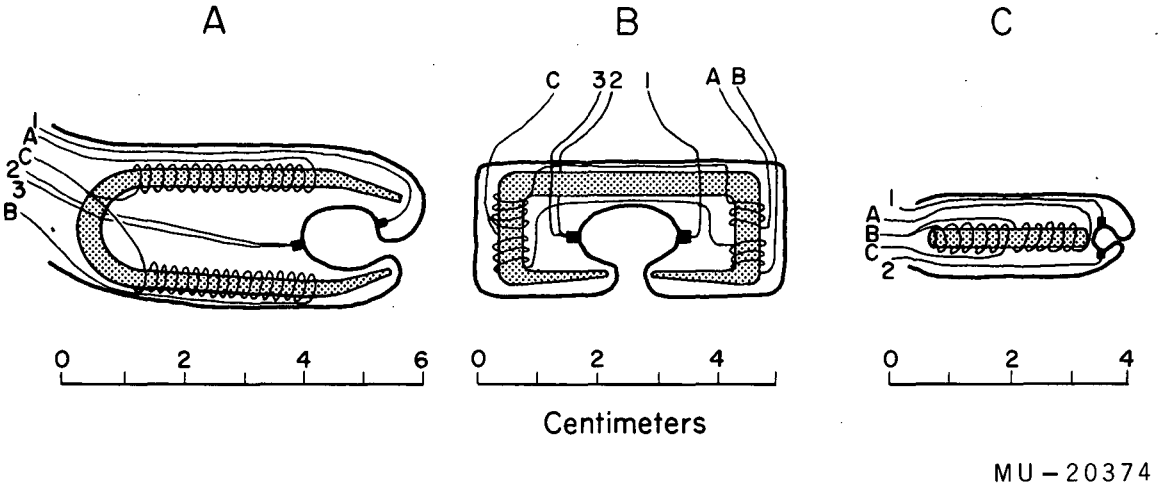

Fig. 18. Transducers designed for the square-wave flowmeter.

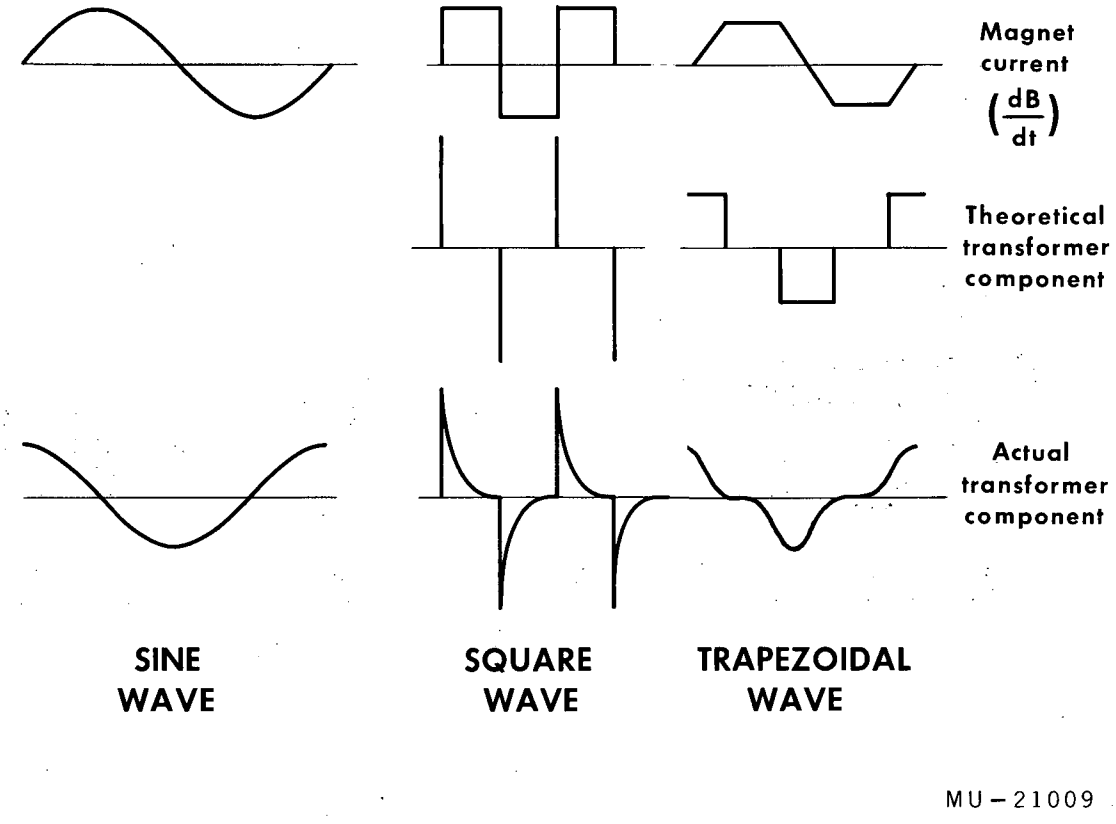

Fig. 19. Transformer component in the sine-wave, square-wave, and trapezoidal-wave transformers.

small fraction of a cycle in this case. An advantage of the trapezoidal-wave flowmeter is that the gate can be open between 10 and 15% of each cycle.

The author has made several transducers of the design shown in Fig. 17. A large common-mode signal was evident in the input signal, which appears due to the imbalance in the transducer.

The transducer can be balanced externally as follows: A small transformer is wound. The 15-turn primary, which is energized by a fraction of the magnet current, has a 6-ohm variable resistor in series with one lead. The five-turn secondary is shielded from the primary and is placed in series with one of the electrode leads. By adjustment of the variable resistor, the transducer can be externally balanced.

Two new transducers have been designed which should eliminate the need for the transformer. The first is shown in Fig. 20. In this design, the magnet coil is bifilar-wound, as shown in Fig. 21. In order to minimize the transformer component, one electrode lead is externalized and placed in final position after the rest of the transducer is completed. A piece of saline-soaked cotton is placed in the artery tunnel between the electrodes. The magnet is then turned on, and the output of the input amplifier is monitored on a sensitive oscilloscope. The wire is then moved into a position which minimizes the transformer component, but keeps the shoulders of the wave balanced and potted in place. It is necessary to make sure that the meter indicating the dc output of the output amplifier is also minimized. Figure 22 is an oscilloscope tracing which shows the transformer component before and after adjustment of the electrode lead.

In the second and more successful design, Fig. 23, the magnet coil is not bifilar-wound. The magnet current energizes the coil and a phantom center-tap is established by placing a 500-ohm potentiometer between the leads with the wiper grounded. With this transducer the transformer component is minimized by adjusting

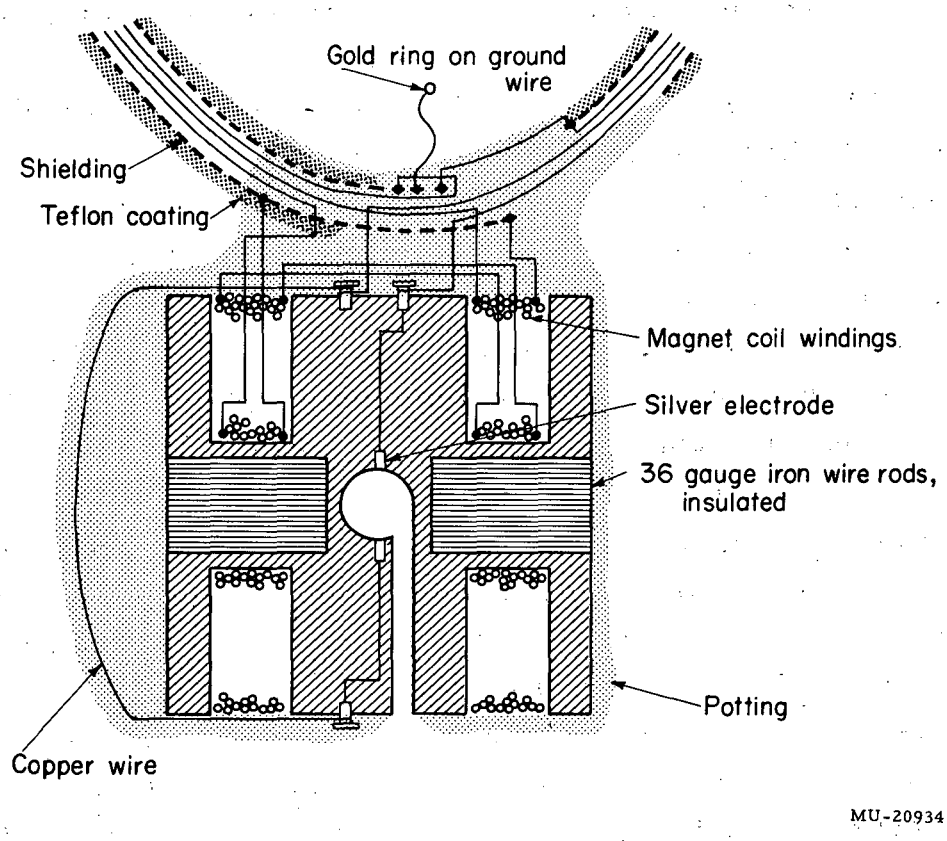

Fig. 20. A new transducer designed for the trapezoidal-wave flowmeter.

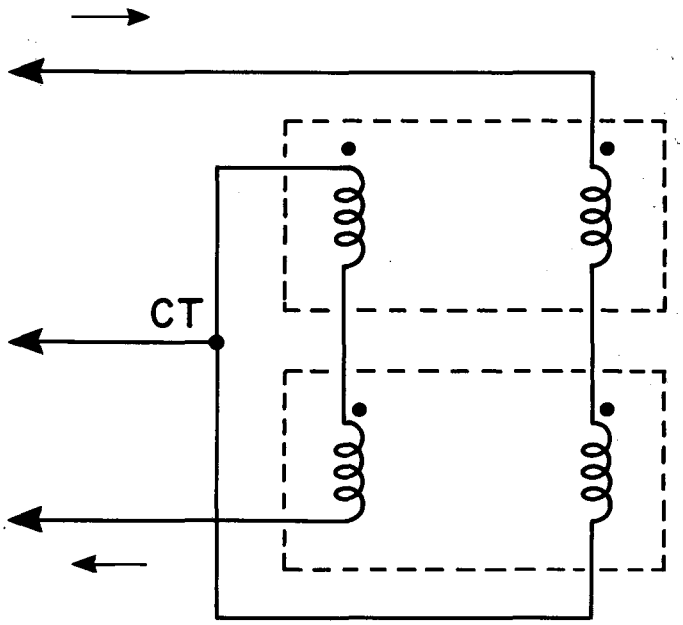

Bifilar magnet coil

MU-20376

Fig. 21. A center-tapped bifilar-wound coil.

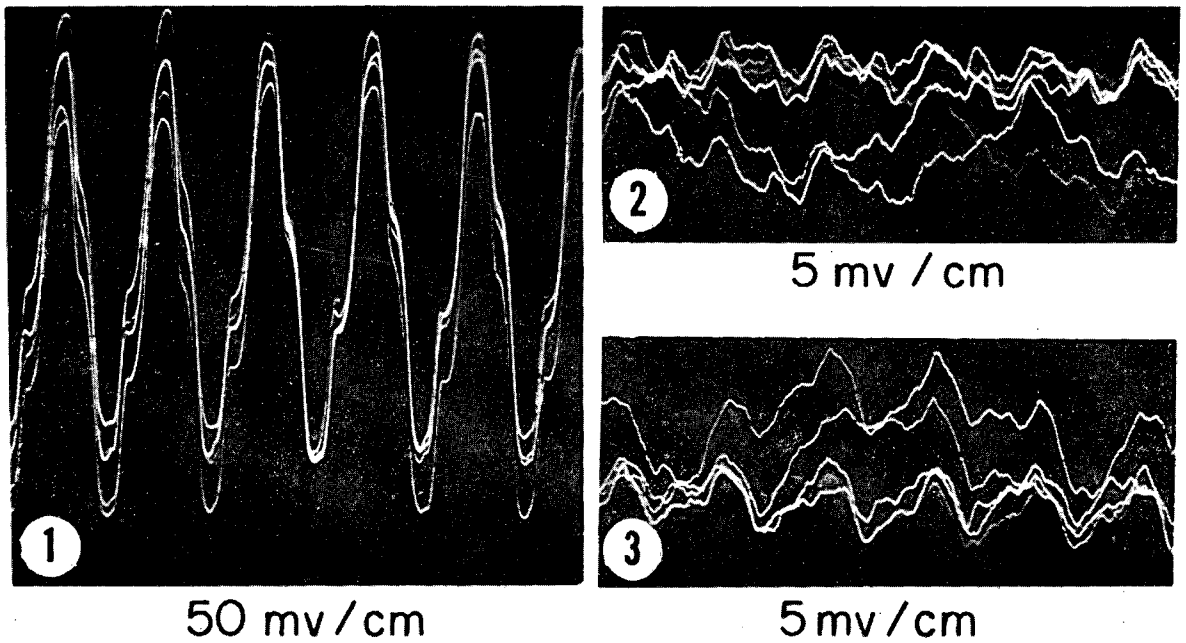

ZN-2586

Fig. 22. The transformer component before and after adjustment of one electrode lead: (1) before adjustment of the electrode lead; (2) after adjustment of the electrode lead; and (3) after adjustment of the electrode lead, and with the transducer disconnected from the input amplifier.

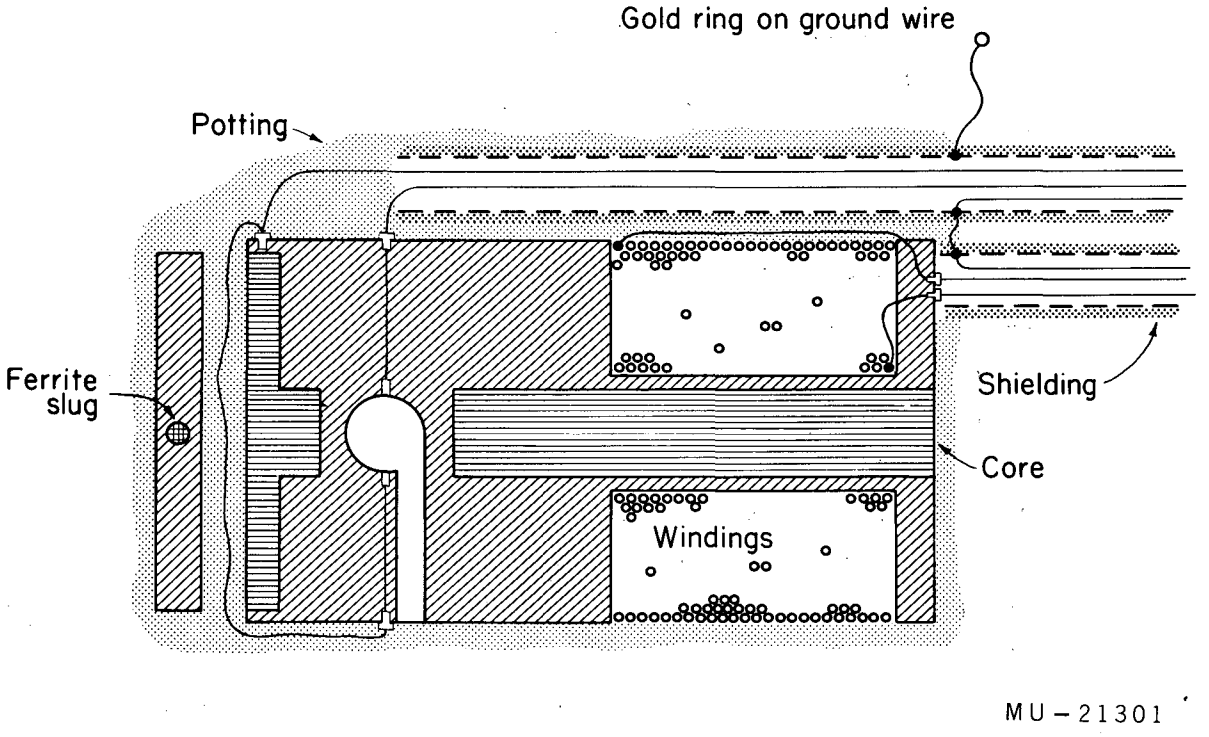

Fig. 23. Single-coil transducer designed for the trapezoidal-wave flowmeter.

both the position of the wire and the external potentiometer. After the transducer is potted, final minor adjustments can be made if provision is made for a threaded ferrite slug, as shown in Fig. 23. When this slug is moved at right angles to the transformer-component adjustment wire, the electrode plane in the magnetic field can be adjusted to some extent to reduce the net flux enclosed by it and thus reduce the transformer component.

A core is used to increase the flux density of the magnetic field across the artery. The success of the single-sided transducer is due, in part, to the use of a ferrite core and shoulder on the side of the transducer opposite the magnet coil (Fig. 23). This core acts as a magnetic return and concentrates the flux in the vicinity of the artery. The magnetic field of each transducer is approximately 100 gauss. These transducers are small enough to be surgically implanted in a dog or cat. They could be made small enough to be implanted in a rat.

The skeletons of both transducers are fashioned from rods of epoxy resin. A jig is first constructed of Duraluminum, Fig. 24, with holes of the correct size and in correct position for drilling the rod in the proper place and with the correct orientation. The jig also provides for marking the rod to show the position of the coil and parting slots. The skeleton is machined in a small lathe to its finished dimensions, Fig. 24. The magnet coils are then wound, using 30-gauge Formvar wire, the cables and silver or gold electrodes added, and the transducer potted with epoxy resin, leaving only the transformer-component adjustment wire unpotted. A filler, such as Sanacel, is added to the epoxy to thicken the unpolymerized material so that it will retain its shape after application to the transducer and during polymerization. The cables used are commercially available three-conductor Teflon coated wires, shielded, and coated with an additional layer of Teflon. Lastly, the plugs are molded in place to make the entire transducer leakproof.

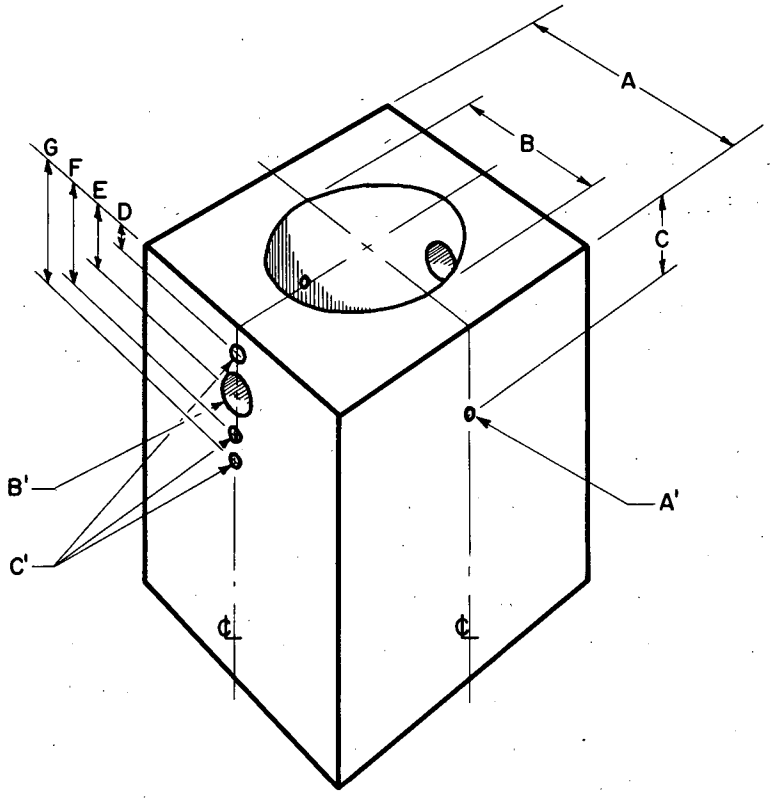

MU-20931

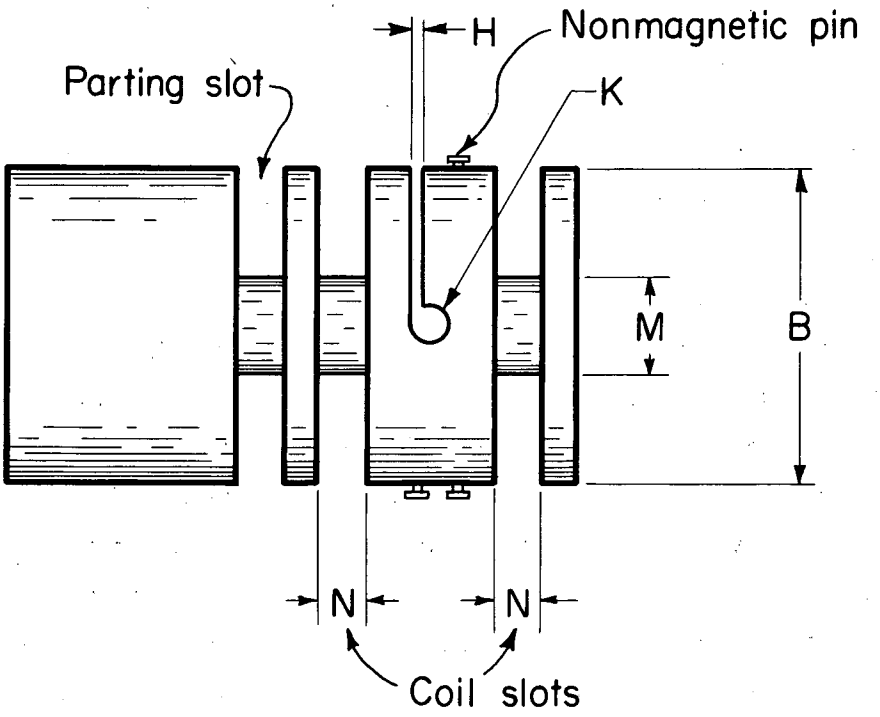

MU-20932

Fig. 24. (above) Transducer jig; (below) transducer skeleton.

V. CALIBRATION

Each transducer must be calibrated separately. Its flow signal will depends on the number of ampere-turns used in making the magnet, the diameter of the artery tunnel, and possibly the amount of residual transformer component after the transducer is potted. All of these factors are an unchangeable part of each finished transducer. For this reason, when a transducer is calibrated under a given set of conditions, it may be expected to perform faithfully when used under the same conditions.

There are, however, several factors which must be considered that are not related to the transducer. First, the thickness of the vessel wall. In theory, the wall thickness, when the wall is neither an insulator nor a metallic conductor, does not affect the flow signal.[9, 10, 11] One may consider the wall as a segment of the inter-electrode path of zero velocity. Since the flowmeter measures the average flow between its electrodes, a segment of this path which is of zero velocity will have no effect on the average flow. To prove this point practically, Spencer and Dennison, using their square-wave flowmeter, obtained the same flow signal when an equal flow passed through first an artery and then a vein inside the artery.[8]

Another factor that must be considered is the conductivity of the fluid. As mentioned earlier, in the section on Theory of Operation, the conductivity of the fluid does not appear in the theory of the instrument. Spencer et al. report, however, that their transducers respond with a greater signal for saline than for blood for equal flows of each. They also report that the flow signal decreases about 5% for every 10% increase in red-cell concentration.[8]

The author chose to calibrate the transducer in situ in order to provide true absolute values of flow. Three dogs from 20 to 38 kg were used. The dogs were anesthetized with sodium pentobarbital (Nembutal) and given sodium heparin to prevent coagulation of the blood in the cannula. The femoral artery was exposed and cannulated

with polyethylene tubing and the transducer was placed around the artery proximal to the cannula. Manipulation of the artery and cannulation tend to cause the artery to go into spasm, resulting in poor contact with the electrodes. To avoid this, the artery was treated with a local anesthetic. The actual calibration consisted of timing the flow of blood from the cannula into a graduated cylinder while the flow signal was being recorded. Figure 25 shows the calibration curve for the transducer used in the experiment presented subsequently in this thesis. Table I shows the calibration data from three dogs. Figure 26 shows the blood flow in the femoral artery of the dog, following the release of a clamp (see General Discussion).

Figure 27 is the circuit for a calibrator. This calibrator supplies a signal of 5, 10, 20, or 50 μv to the input of the flow-signal amplifier and demodulator. The output is then recorded as if it were a flow signal. This provides a test signal to insure that the electronics and the recorder are operating satisfactorily. This calibrator does not supply any information about the calibration of the transducer and hence does not measure blood flow. It does, however, allow the experimenter to check the instrument to be sure that it is operating the same before and after the experiment.

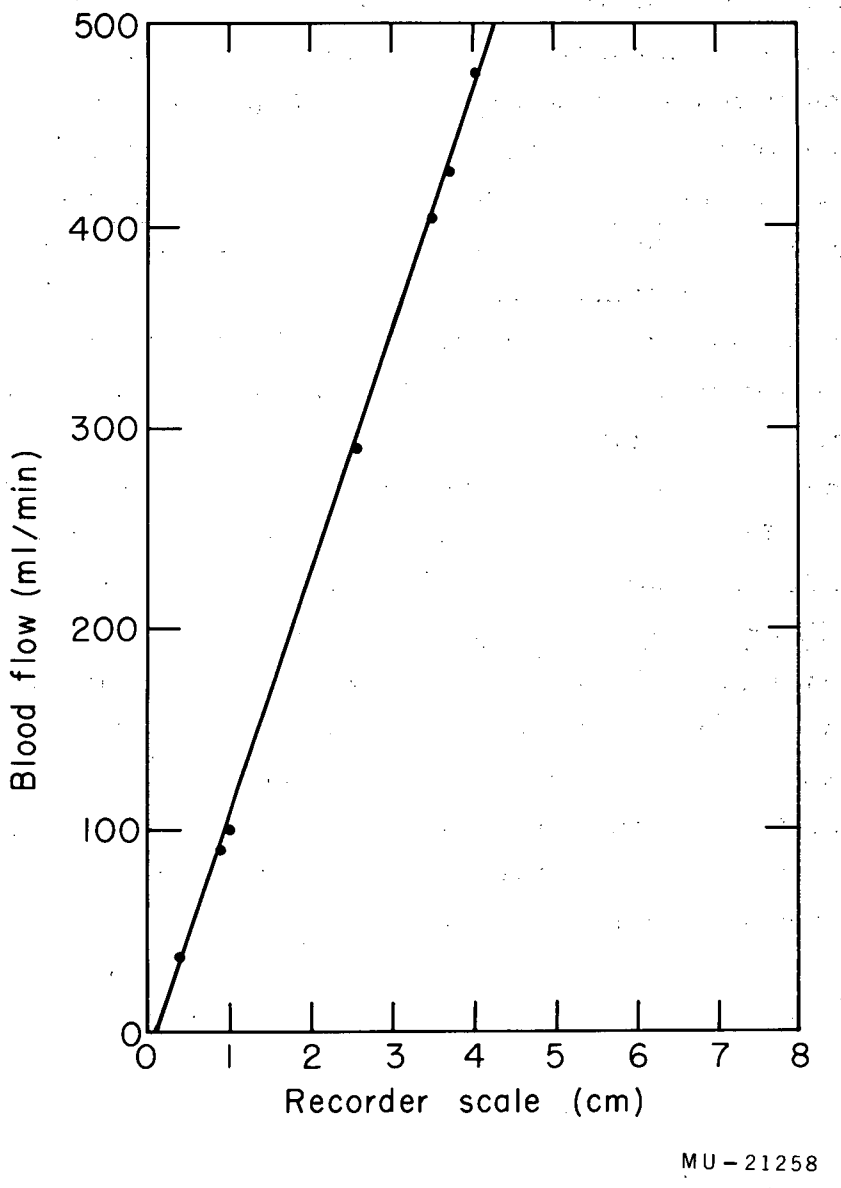

Fig. 25. The calibration curve for the transducer used in the experiments in Section VI.

Table I

Calibration data plotted in Fig. 25

Blood flow (ml/min)	Recorder scale (cm)
37	0.4
90	0.9
100	1.0
100	1.0
100	1.0
100	1.0
100	1.0
140	1.4
205	2.0
291	2.6
403	3.5
427	3.7
477	4.2

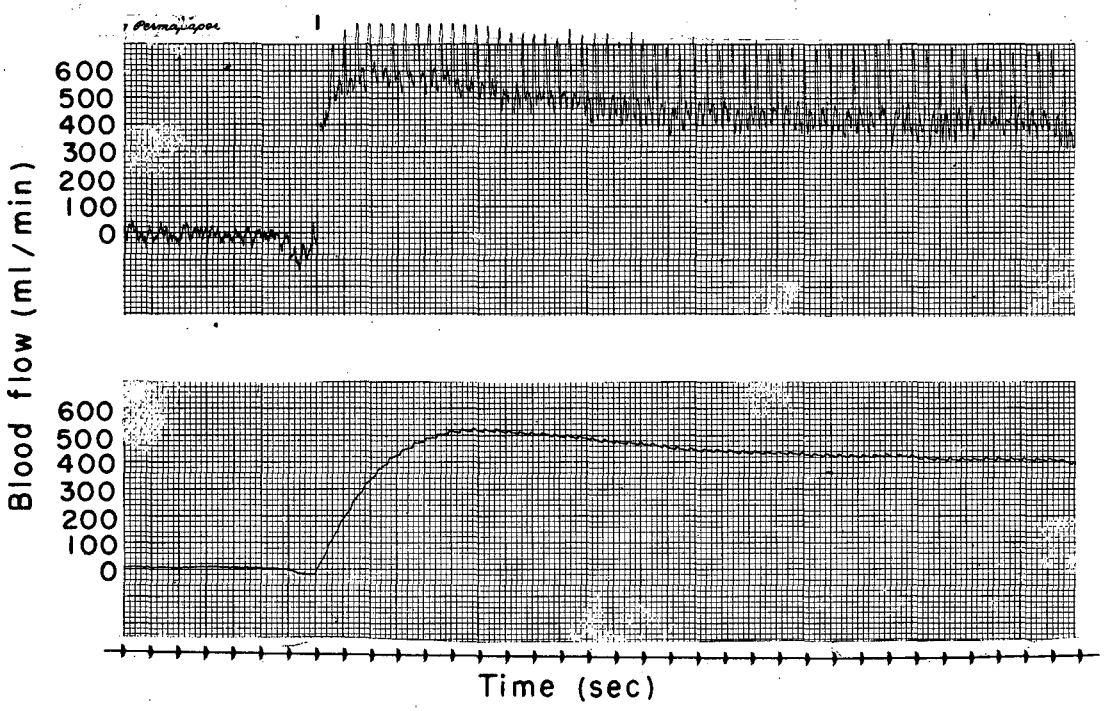

MU-21251

Fig. 26. Blood flow in the femoral artery of a dog: pulsatile blood flow (upper record); average flow measured simultaneously by passing flow signal through an RC integrating network (lower record).

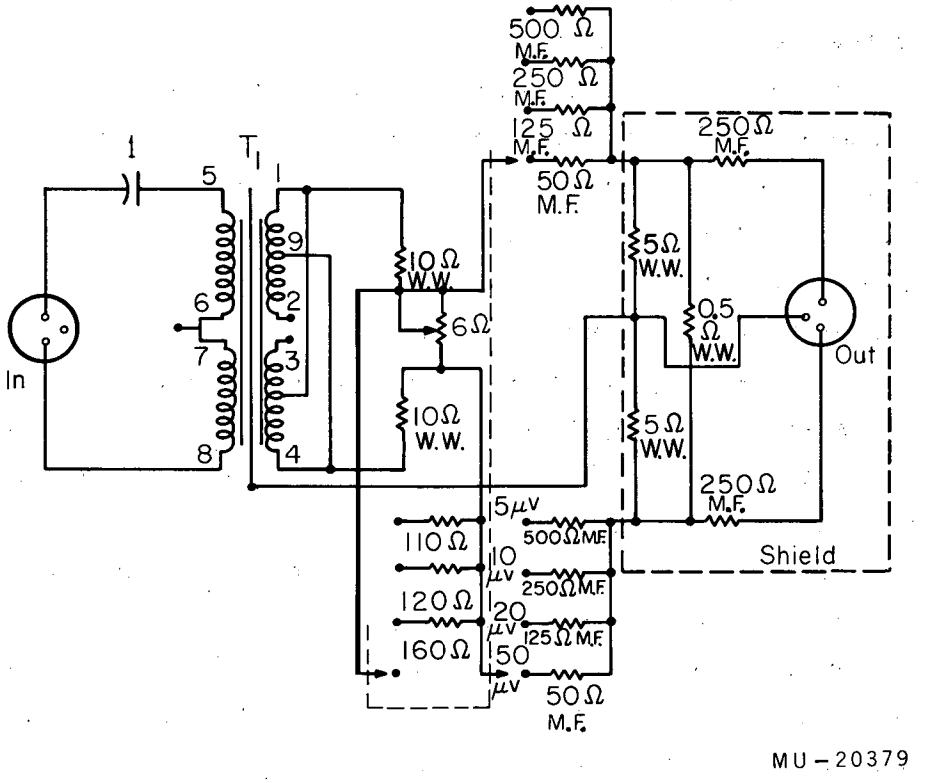

Fig. 27. Calibrator circuit.

VI. PRELIMINARY MEASUREMENTS OF BLOOD FLOW IN THE HIND LIMB OF THE DOG

Preliminary measurements of flow in the femoral artery of the dog were made. The trapezoidal-wave electromagnetic flowmeter was used to measure total blood flow in the femoral artery of the anesthetized dogs. Changes in the blood flow in response to a series of drugs were also measured. The femoral artery was chosen because the author had had previous experience measuring flow in this artery, using an electromagnetic flowmeter of another design, and because of the relative ease with which it can be surgically exposed. The use of the femoral artery has had one disadvantage, however, in that it was not convenient to chronically implant the flowmeter transducer around the femoral artery because of the lack of space between the artery and the skin. During the course of these preliminary experiments, many errors in both the construction and the design of the instrument were found and solved.

In one series of experiments, a small amount of radioactive sodium chloride was injected into the femoral artery of the animal, just distal to a flowmeter transducer. Activity with respect to time was measured in both legs of the animal with external counters. The total turnover rate of sodium can be calculated from the activity data. It is necessary, however, to make some fundamental assumptions before physiologically meaningful flow values can be ascertained. These assumptions are discussed later. If all of the assumptions are accepted, the flow, as measured by using the radioactive sodium, should represent the fraction of the total femoral artery flow which perfuses the tissue of the peripheral vascular bed. The flow of blood through all the capillaries in which active diffusion takes place is called, in this thesis, the effective tissue flow. This is to be contrasted to the total flow through a given vessel, e.g., the femoral, as measured with the flowmeter, and to the fraction of that total flow which passes through arteriovenous shunts and in which diffusion to tissues does not take place. The experimental techniques and the mathematical analysis used here were adopted from Dobson and Warner.[17]

A. Experimental Procedure (Total Femoral Flow and Effective Tissue Flow)

Four experiments were performed in two male dogs weighing 18.2-kg and 38.1 kg, respectively. The dogs were anesthesized with sodium pentobarbital (Nembutal), 25 mg/kg body weight, administered intravenously.

An incision was made in the skin of the hind limb directly over the femoral artery. The artery was exposed and a calibrated transducer was placed around it. The exposed tissue of the animal was carefully grounded. The artery was then clamped with a rubber-tipped hemostat just distal to the transducer, and a short section of "zero flow" was recorded. The clamp was then released and flow was measured with respect to the indication of the zero-flow position on the recorder. The total flow as measured with the flowmeter was monitored throughout the experiment.

The thighs of the animal were arranged over two external scintillation counters. A modified nonmagnetic needle, fitted with a short length of polyethylene tubing, was inserted into the artery just distal to the flowmeter transducer. One ml of radioactive sodium chloride solution, 3% (w/v), containing 20 to 100 μC of Na^{24}, was injected into the artery. Activity in the injected leg, as seen by the counter, rapidly reaches a maximum and falls off exponentially, reaching equilibrium in about 40 minutes. The disappearance of activity in the injected leg and the appearance of activity in the other leg were continuously recorded. An example of this curve is shown in Fig. 28a. The arrangement of the equipment used is diagrammed in Fig. 29.

Three of the above experiments were carried out with the 18.2-kg dog and the other with the 38.1-kg dog. Total femoral artery flow was measured with the flowmeter, and at the same time the activity in both legs was recorded in both normal, anesthetized animals. These parameters were also measured in the 18.2-kg dog in response to an intravenous infusion of 8 mg/liter of norepinephrine in 5% dextrose

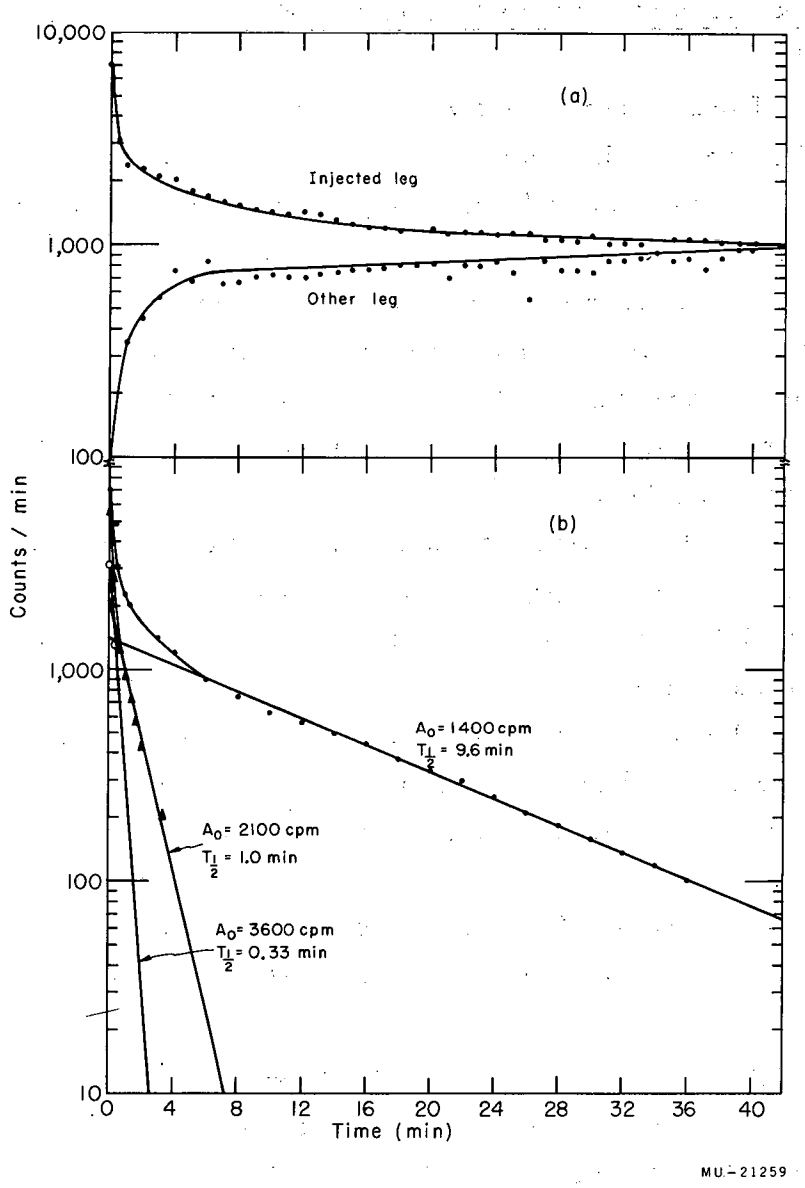

Fig. 28. (a) Disappearance of Na^{24} activity from the injected leg, and the appearance of Na^{24} activity in the other leg; (b) The net disappearance of activity from the injected leg and the components of the exponential curve.

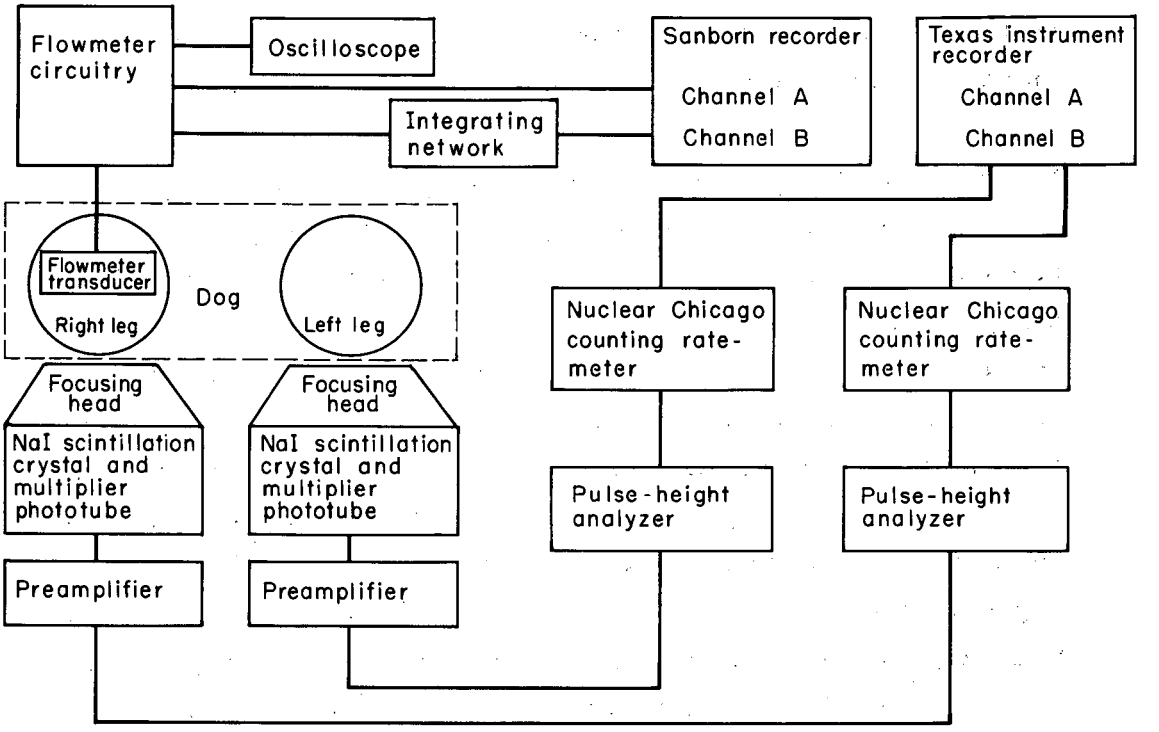

MU-21261

Fig. 29. Apparatus used to measure total femoral artery blood flow and Na^{24} activity in the hind limbs of the dog.

in water (Levophed bitartrate, Winthrop-Stearns, Inc.) at a constant rate of 0.8 ml/min. Thirty minutes after the norepinephrine infusion was stopped, the animal was given a 1-ml intramuscular injection of epinephrine in oil (1/500, Eli Lilly and Co.). After an additional 30 minutes, the same measurements were again made.

The volume of the animal's injected leg was measured by dipping the leg into a container of water, which was filled to the brim, and measuring the volume of the water that overflowed.

B. Results (Total Femoral Flow and Effective Tissue Flow)

Figure 28a shows the appearance and disappearance curves represents the recirculation of Na^{24} ion in the uninjected leg. The disappearance curve has been moved vertically so that the tail of the curve coincides with the tail of the appearance curve. This is justified on the premise that after 40 to 60 minutes, the activity in both legs is equal. Thus, the separation of the tails may be ascribed to differences in counter sensitivity and geometry. When the appearance curve is subtracted from the disappearance curve, the resulting curve (Fig. 28b) represents the net disappearance of Na^{24} ion from the injected leg, following the initial rapid equilibration of the Na^{24} injection. The rapidity of equilibration of the injected Na^{24} with the Na ions already present in the tissue is discussed at length by Dobson and Warner.[17]

Dobson has described the peripheral vascular bed, with regard to the disappearance of Na^{24} ion, as a multipool system. As such it has an activity which at any particular time may be expressed by the equation

$$A_0 = A_0' e^{-k't} + A_0'' e^{-k''t} + A_0''' e^{-k'''t} + \ldots\ldots$$

The specific equation for the curve shown in Fig. 28b is

$$A_0 = 3600e^{-2.08t} + 2100e^{-0.69t} + 14.00e^{-0.072t}$$

Figures 28b, 30, 31, and 32 show the net counting rate in the injected leg in the above experiments with time. Table II summarizes the data obtained from these curves and the resulting calculations of the total Na turnover rate. The sum of the three values of k_i is equal to the total turnover rate, as seen by the external scintillation counters. If the total turnover rate is then multiplied by the ratio of the Na concentration per liter of blood to the Na concentration per liter of muscle, the result may be expressed as the number of ml/min/liter of muscle. Elkinton and Donowski have reported that the dog has 32.4 meq Na per liter of muscle.[18] In this Laboratory we have found that the average hematocrit in an anesthetized dog is about 40% and the concentration of Na in the plasma is about 140 meq/liter. Therefore the concentration of Na in the blood is about 77 meq/liter. If the dog leg is assumed to be only muscle and if the leg is assumed to be supplied only by the femoral artery, then the product of the volume of the leg times the tissue perfusion factor, expressed in ml/min/liter of muscle, is an estimate of the total tissue perfusion of the legs. Table III summarizes the total femoral artery flow data, the calculated effective tissue flow data, and the ratio of the two expressed as effective tissue flow in terms of percentage of total femoral flow.

C. Discussion (Total Femoral Flow and Effective Tissue Flow)

An accurate estimation of effective tissue flow in the hind limb of the dog is difficult. One must assume first that the mixing of the Na^{24} ion with the other Na ions in the sodium space is uniform and rapid. One would expect that the speed of mixing would be "flow limited" rather than "capillary diffusion time limited" because of the nature of the diffusion process. Dobson discusses this point in some detail.[17] The uniformity of mixing, on the other hand, presents a different problem. There is evidence to show that the mixing of the Na^{24} ion is not uniform. If the tissue of the hind limb is unequally vascularized, one would expect the Na^{24} distribution not to be uniform. Since the total turnover rate was used to calculate the effective tissue flow, the uniformity of the distribution of Na^{24} within the various pools can be neglected.

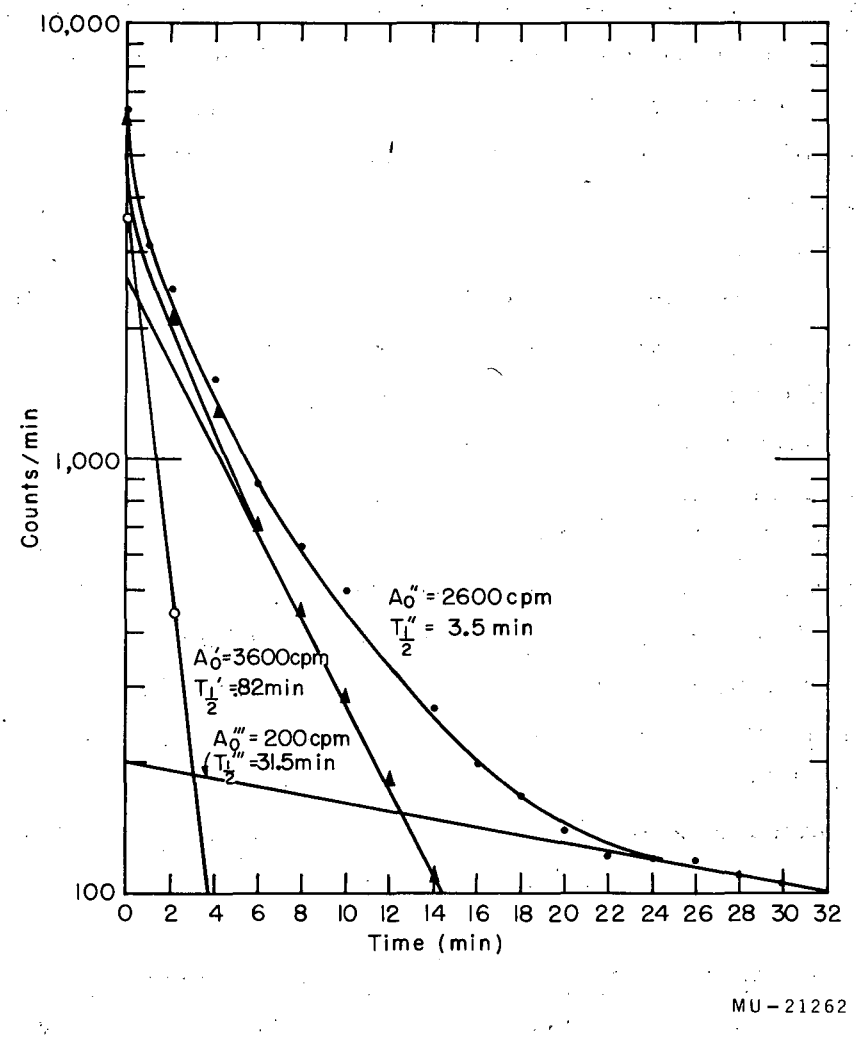

Fig. 30. Net disappearance of Na^{24} activity from the injected leg of the 18.2-kg normal, anesthetized dog.

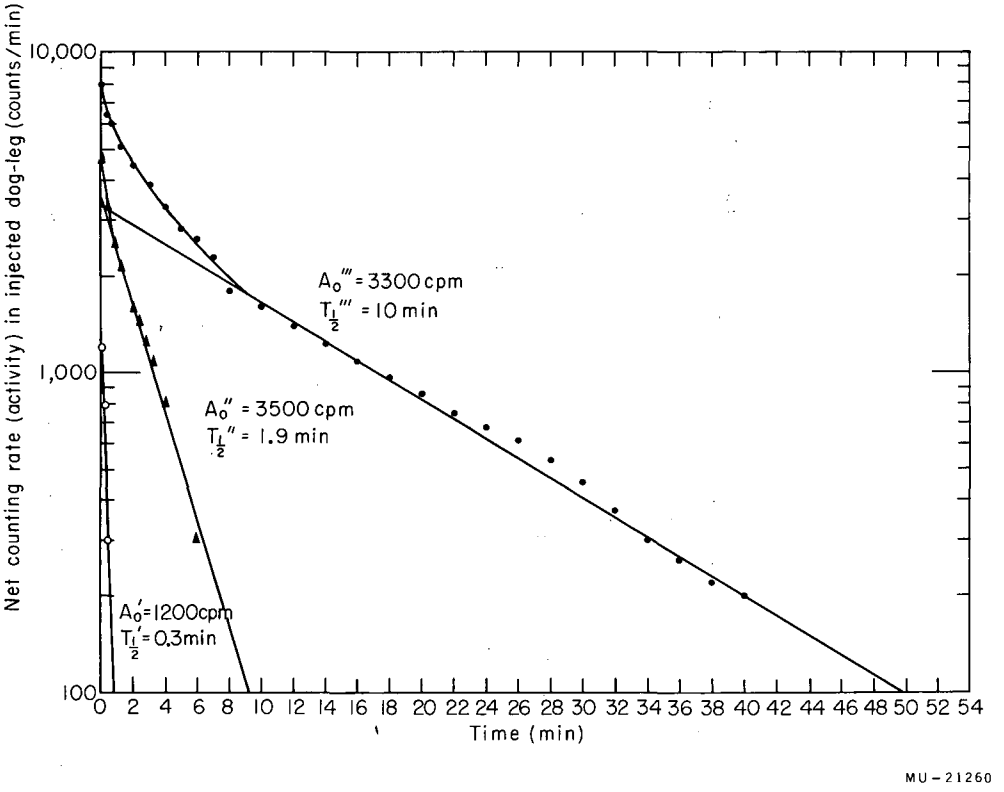

Fig. 31. Net disappearance of Na^{24} activity from the injected leg of the 18.2-kg dog during an infusion of norepinephrine.

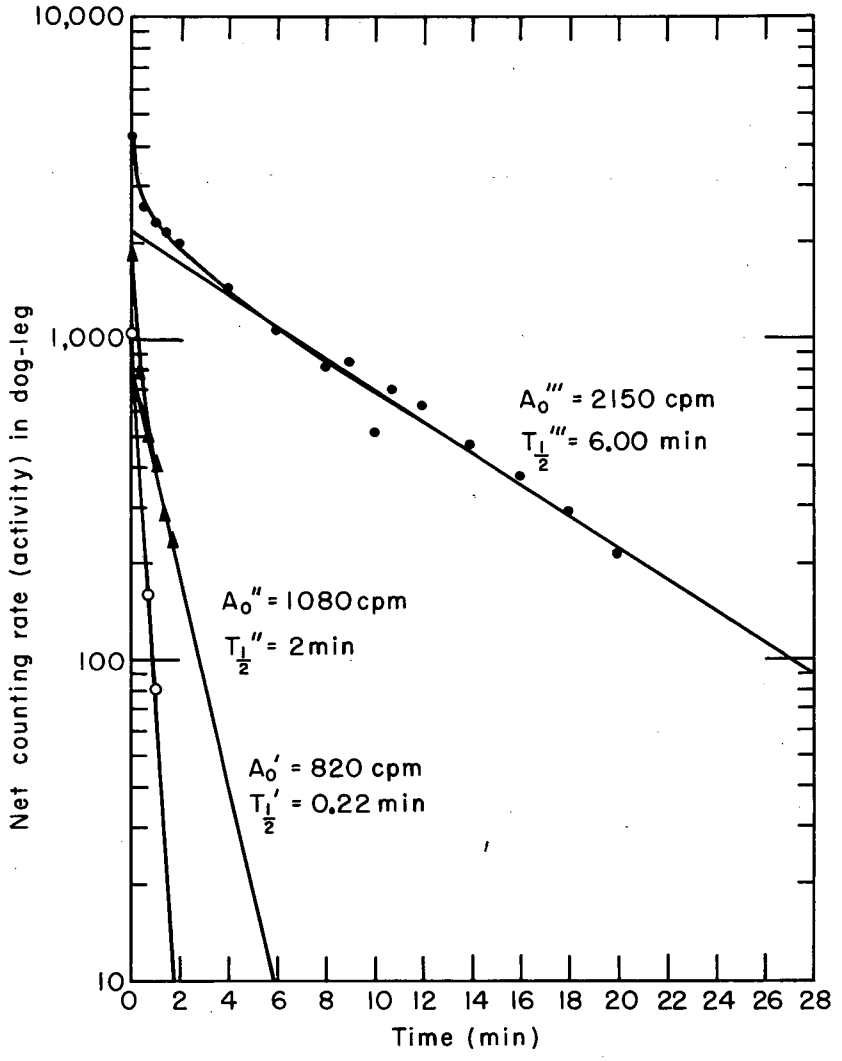

Fig. 32. Net disappearance of Na^{24} activity from the injected leg of the 18.2-kg dog following an injection of epinephrine in oil.

Table II

Summary of data: net counting rate in injected dog leg

Animal used	Total Na^{24} in each pool	Na^{24} turnover rate	Relative siz of each pool with each turnover rate	Fraction of total pool with each turnover rate	Contribution of each pool of each turn-over rate
	A_0	$k = \frac{0.693}{T_{1/2}}$	$\frac{A_0}{k}$	$F = \frac{A_0/k}{\sum_{A_0'/k'}^{A_0'''/k'''} \frac{A_0}{k}}$	$F \times k$
	(counts/min)	(min^{-1})	(count)		(min^{-1})
Dog 2, 38.1 kg	$A_0' = 3600$	$k' = 2.079$	1731	0.079	0.164
(Fig. 28b)	$A_0'' = 2100$	$k'' = 0.693$	3030	0.125	0.086
Normal	$A_0''' = 1400$	$k''' = 0.072$	19444	0.803	0.057
	Volume of injected leg: 1750 ml			Total turnover rate =	0.307
Dog 1, 18.2 kg	$A_0' = 3600$	$k' = 0.835$	4311	0.171	0.143
(Fig. 30)	$A_0'' = 2600$	$k'' = 0.22$	11818	0.468	0.102
Normal	$A_0''' = 200$	$k''' = 0.022$	9091	0.360	0.008
	Volume of injected leg: 1045 ml			Total turnover rate =	0.253
Dog 1	$A_0' = 1200$	$k' = 2.310$	520	0.008	0.018
(Fig. 31)	$A_0'' = 3500$	$k'' = 0.364$	9616	0.165	0.060
Norepinephrine	$A_0''' = 3300$	$k''' = 0.069$	47826	0.825	0.057
				Total turnover rate =	0.135
Dog 1	$A_0' = 820$	$k' = 4.05$	303	0.013	0.053
(Fig. 32)	$A_0'' = 1080$	$k'' = 0.346$	3121	0.141	0.049
Epinephrine	$A_0''' = 2150$	$k''' = 0.115$	18695	0.845	0.097
				Total turnover rate =	0.199

Table III

Total flow, as measured with the flowmeter

	Dog 1 (normal)[a]	Dog 1 (norepinephrine)	Dog 1 (epinephrine)
Total femoral artery flow	220 ml/min[b]	183 ml/min[c]	319 ml/min[b, d]
Muscle perfusion	111	59	87
Muscle perfusion as a percentage of total femoral artery flow	50%	32%	27%

[a]Dog 1 weighed 18.2 kg and Dog 2 weighed 38.1 kg

[b]Average value during the time the sodium data were being recorded.

[c]Measured in the hour following the beginning of infusion

[d]Measured during the hour following 30 min after injection.

In the experiments performed by the author, effective tissue flow was compared with total flow through the femoral artery as measured with the flowmeter. Such a comparison is meaningful only if the Na^{24} ion, when injected into the femoral artery, perfused tissue supplied only by the femoral. But the hind limb of the dog can survive when its femoral artery is ligated. In ligation, it would not be a good assumption that the musculature of the entire leg is supplied only by the femoral. If the tissue supplied by the femoral is also supplied by some other artery, then the Na^{24} ion must also mix with another set of pools. If this does occur, the effective tissue flow and the total femoral artery flow cannot be compared, because the femoral artery will be supplying only some of the capillaries in the tissue to which effective tissue flow is measured.

The results of the experiment performed by the author showed agreement within 8% for the two normal anesthetized animals studied. When, in one dog, the total flow decreased from an apparent 220 ml/min to 183 ml/min, under the influence of norepinephrine, the calculated effective tissue flow dropped from 111 ml/min to 59 ml/min. This result seems reasonable in the light of the apparent vasoconstriction caused by the norepinephrine. It should be noted that the intramuscular injection of epinephrine in oil was given 30 minutes after the norepinephrine infusion was stopped. This should have been ample time for inactivation of the norepinephrine, according to Goodman and Gilman.[19] The epinephrine increased the total flow to 319 ml/min, while decreasing the effective tissue flow to 87 ml/min. This result may be explained on the basis that the elevated blood pressure, and hence the elevated flow, caused an increase in the number of arteriovenous shunts in the capillary bed. It is also possible that, owing to the increased flow, there was more mixing of the Na^{24} with blood from other than the femoral artery. This would tend to make the ratio of effective tissue flow to total femoral flow appear higher.

After these experiments were performed, some question arose as to the base line representing zero flow. This is discussed in much

greater detail in Section VII, the general discussion. There appears to be some evidence that the total flow as measured with the flowmeter is actually lower than reported in Table III.

D. A Study of the Response of the Total Femoral Artery Flow to a Series of Drugs

A series of experiments was performed in which changes in total femoral artery flow in response to a series of drugs were observed. The flowmeter transducer was placed around the femoral artery and the surrounding tissue was grounded. Each of the drugs used was injected either into the vein at a point next to the transducer or into the artery, just distal to the transducer.

Figure 33a shows the response of the femoral artery flow to a 1-mg intra-arterial injection of l-norepinephrine (Levophed bitartrate, Winthrop-Stearns, Inc.). An almost immediate fall in both pulsatile and mean flow is noted. The mean flow decreased a maximum of 20 ml/min. Recovery began within 30 seconds. Figure 33b shows the response to the same drug (1 mg) when injected intravenously. The onset of response was not only much more gradual but also the response was lower in magnitude.

Figure 34a shows the response to 0.5 ml of a 2% (w/v) injection of Procain HCl (Abbott). A very slight rise in mean flow is noted. Pulsatile flow is practically unchanged. Figure 34b shows the flow following an intra-arterial injection of 250 mg of Aminophyllin (Lederle brand of theophylline-ethylenediamine). Within 14 seconds there is a definite increase in flow. The response to this drug appears to be much more mild than to histamine. Figure 34c shows the response to 0.25 ml of adrenalin (1/1000, Parke-Davis), given intravenously. Within a few seconds, the average flow increased about 40 ml/min. The pulsatile flow doubled. The entire response dropped off within 30 seconds. Figure 35a shows the response to two drugs. About ten seconds prior to the mark on the time scale, an injection of 0.5 unit of Pitressin was given. The flow immediately dropped to

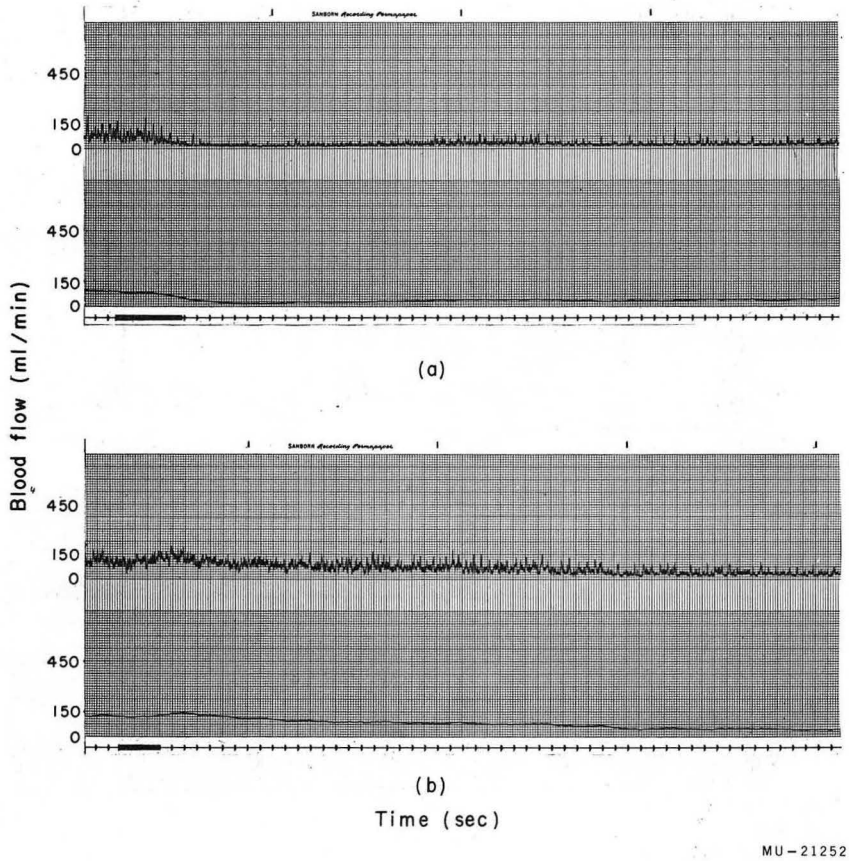

Fig. 33. (a) Femoral artery flow following an intra-arterial injection of norepinephrine (upper); the integrated signal (lower). (b) Femoral artery flow following an intravenous injection of norepinephrine (upper); the integrated signal (lower).

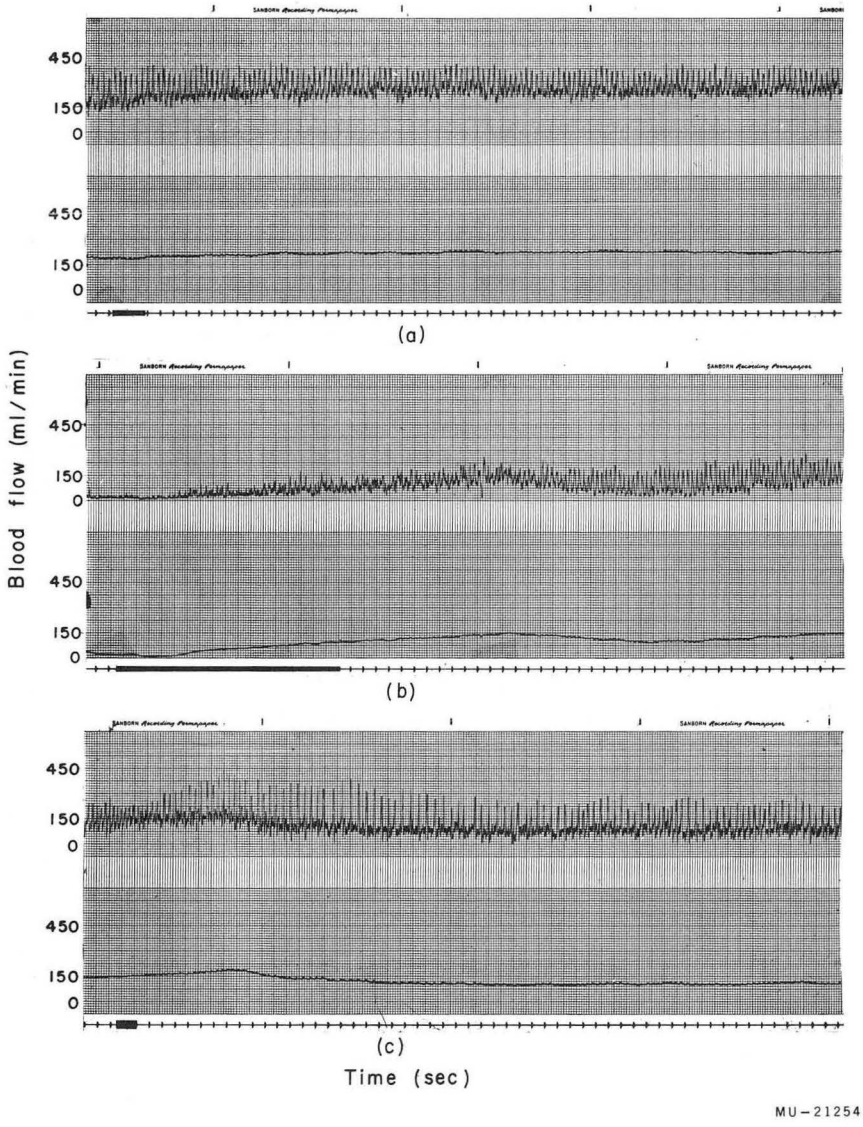

Fig. 34. Femoral artery flow in response to the following drugs: (a) intra-arterial procaine 2%, w/v (top); (b) 250 mg aminophylline, intra-arterially (top); (c) 0.25 ml adrenelin 1/1000, intra-arterially (top). The bottom record of all three responses is a presentation of the integrated signal above it.

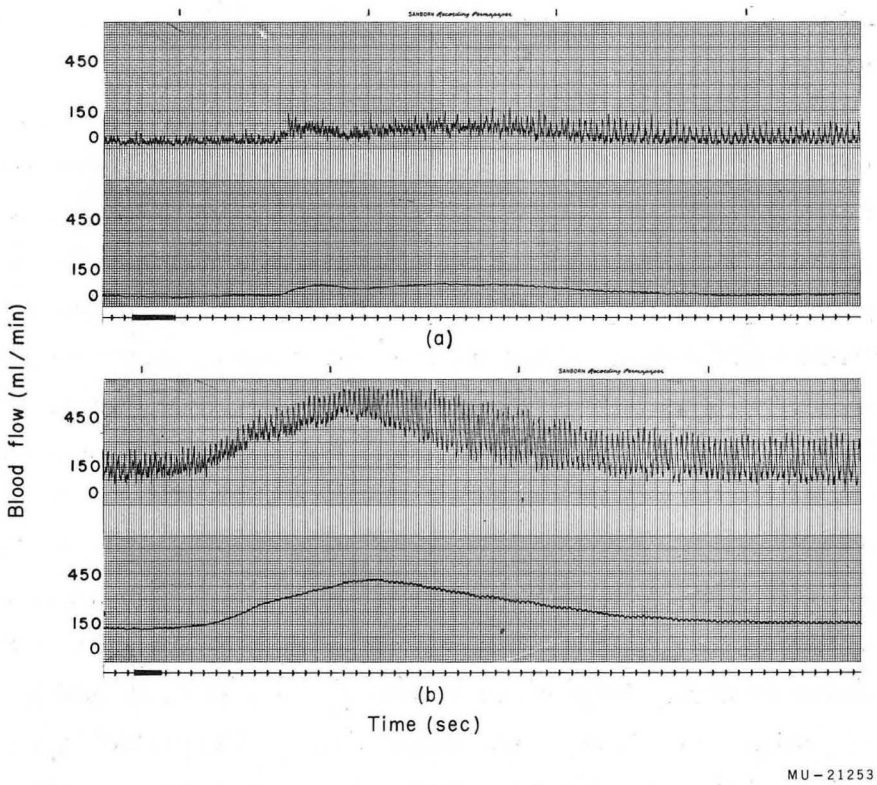

Fig. 35. Femoral artery flow in response to the following drugs: (a) 0.68 mg histamine, immediately following pitressin, intra-arterially; (b) 0.68 mg histamine, intra-arterially. The bottom record of both responses is a presentation of the integrated signal above it.

the position shown on the record. Then an injection of 0.68 mg of histamine PO_4 (Abbott) was given. In about 6 seconds a more normal flow was observed. The histamine seemed to have reversed the effect of the Pitressin, which was to be expected. Figure 35b shows the rapid and dramatic effect of an intra-arterial injection of 0.68 mg of histamine. The mean flow rose almost 300 ml/min and the pulsatile flow doubled.

The total femoral artery flow was measured in the 38.1-kg dog used in Part A of this section. The flow was monitored during a 1-hour infusion of norepinephrine (8 mg/liter in 5% dextrose in water), and during a subsequent injection of epinephrine in oil (Eli Lilly and Co.). In the first 6 min the mean flow dropped from 300 ml/min to 130 ml/min, but by the end of an hour it had risen again to 130 ml/min. After 2.6 hours of infusion the mean flow had dropped to about 40 ml/min. Five min after the norepinephrine infusion was terminated, the dog began to recover, and in 15 min the flow had risen to 80 ml/min. Thirty min after the infusion was stopped, an injection of 0.5 ml of epinephrine in oil (1/500, Eli Lilly and Co.) was injected intramuscularly. The mean flow remained 80 ml/min for about 45 min. In one more hour the mean flow had increased to 120 ml/min. The flow never rose higher than it had been at the beginning of the experiment, as might have been expected following an injection of epinephrine. The animal, however, had been under deep anesthesia for about 6 hours. The results described above were essentially the same for the 18.2-kg dog when the same drugs were administered as described in Part A of this section.

VII. GENERAL DISCUSSION

The trapezoidal-wave electromagnetic blood flowmeter was designed to measure instantaneous, phasic blood flow. It should be possible to measure blood flow, simultaneously, in a number of vessels at the same time. The frequency response of the instrument should be at least 50 cps, to permit adequate analysis of the Fourier components of the pulse wave. The flowmeter should have virtually zero drift and a high signal-to-noise ratio.

This flowmeter, although not drift-free, has excellent drift characteristics. When a transducer is used with a magnetic field of 100 gauss, the femoral artery flow generates a mean signal of about 5 μv. Since the noise level of the flow-signal amplifier and demodulator was found to be less than 0.1 μv, the signal-to-noise ratio of this amplifier is over 50. This signal-to-noise ratio is very reasonable when one considers that the input signal is in the microvolt range.

It is difficult to measure the frequency response of an instrument such as this flowmeter. In order to measure the frequency response of a flowmeter it is necessary to construct an hydraulic system in which the liquid moves back and forth with constant amplitude and with frequencies from zero to more than 50 cps. Ferguson and Wells have described a rather elaborate series of specially made instruments for this purpose.[20] They reported that both the sine-wave flowmeter and the square-wave flowmeter were capable of a 45-cps frequency response. This trapezoidal-wave flowmeter uses a carrier frequency of 1000 cps compared with the 400 cps sine-wave flowmeter and the 240 cps square-wave instrument used by Ferguson.[20] The usable frequency response usually has a theoretical limit of one-half the carrier frequency and a practical limit of one-fourth of the carrier frequency. If this is the case, the trapezoidal-wave flowmeter should certainly meet the minimum requirements and may be expected to do much better. It will be necessary to evaluate the frequency response of this instrument in the future.

The construction of the transducer element is a delicate task. The transducer is a most important part of the flowmeter. The flowmeter transducer must have a large enough magnetic field to insure an adequate flow signal. At the same time, it must be small enough to be chronically implanted in the animal for at least a month. Probably the most important problem is the elimination of the transformer component. This is done, presently, by carefully adjusting one electrode wire and, while monitoring the transformer component with an oscilloscope, potting the electrode wire in place with epoxy resin. Bifilar-wound two-sided transducers (Fig. 20) would be expected to have little imbalance, and therefore removal of the transformer component should not be difficult. The one-sided transducer (Fig. 23), however, has been more successful in this respect. The use of an external potentiometer to establish a phantom ground is a great improvement. It would be still better to be able to adjust the electrode wire after the transducer has been potted. The author has recently found that by adding a small ferrite slug, as shown in Fig. 23, minor adjustments can be made in the apparent position of the electrode wire after the transducer has been potted. Another problem is that one needs a rather large assortment of transducers, each with a slightly different size of artery tunnel. This is necessary because the transducer must fit snugly, but not too tightly, around the artery. It must be tight enough to insure contact of the artery wall with the electrodes and loose enough not to constrict the artery. The author is presently building a transducer in which the artery-tunnel portion may be separated from the magnet coil. One may then have a series of artery tunnels for each magnet.

The electromagnetic flowmeter is not difficult to operate. There are, however, certain problems which the flowmeter shares with other sensitive electronic equipment, such as the EEG, the EKG, the EMG, and others. These problems are most commonly associated with proper grounding of the instrument and a variety of interferences.

Since the first measurement of femoral artery flow was made with this instrument, the values of flow have appeared to be rather high. Ferguson,[20] Stacy,[21] Wormersley,[22] McDonald,[23] and many others have described the existence of negative flow in the femoral artery of the dog during about 20% of each cycle. Flow records obtained by the author have never shown a negative flow in the femoral artery. The flowmeter was checked and found to measure both positive and negative flows faithfully. A careful study of the calibration records led the author to believe that when the artery was clamped close to the transducer, the artery wall lost contact with one electrode. This loss of electrode contact caused a decrease in the "zero flow" signal. Since the zero-flow signal or baseline was lower, the flow appeared to have a higher value. To demonstrate that the flow actually does flow toward the heart (negative flow) for about 20% of each cycle, the author exposed a femoral artery and carefully clamped the artery in such a way as to avoid causing the electrode to lose contact with the artery wall during the measurement of zero flow. When this precaution was taken the femoral flow pulse wave showed the expected negative flow and a lower mean flow.

If a transducer is made which has little or no residual transformer component, then the flow signal obtained with the magnet current switched off indicates zero flow and no clamp is necessary. Should some residual transformer component be present, a small constant flow signal would remain when the magnet current was switched off. This constant error would then have to be subtracted from the flow signal to yield true flow. Since the residual transformer component causing this error is determined when the transducer is calibrated, the zero-flow base line can be determined without clamping the artery. This is especially important if the transducer is to be chronically implanted in the animal.

VIII. GENERAL SUMMARY

The electromagnetic flowmeter is an instrument which measures the velocity of a fluid moving in a tube or pipe. By constraining the vessel in a sleeve, flow may be measured directly. A magnetic field crosses the tube at 90 deg to the axis of the tube and to the plane of the electrodes. As the ions in the fluid pass the magnetic field, a voltage is induced in the electrode circuit.

This flowmeter is different from existing flowmeters because of the unique trapezoidal wave form that energizes the magnet. This Thesis describes the trapezoidal-electromagnetic blood flowmeter and shows some examples of physiological applications. This new flowmeter is compared with other types of electromagnetic flowmeters. The construction of two designs of transducer elements is described. The calibration of the instrument to measure blood flow in the dog is discussed.

The flowmeter was used to measure the total femoral artery flow in dogs. The soidium turnover rate in the tissues of the dog leg was estimated by using Dobson's intra-arterial radioactive sodium technique. Tissue perfusion in that dog leg was calculated from these data, after certain assumptions were made. The effects of epinephrine and norepinephrine on leg-tissue perfusion were compared in the normal dog. The fraction of the total femoral artery flow which perfused the tissue—for the most part muscle—in the hind limb of the two normal anesthetized dogs agreed within 8%. In one animal an infusion of norepinephrine lowered the fraction to 32% and a injection of epinephrine lowered the fraction still further to 27%.

Total femoral artery flow was measured in response to intra-arterial injections of norepinephrine, histamine, procaine, aminophyllin, and Pitressin; intravenous injections of adrenalin and norepinephrine; and an intramuscular injection of epinephrine in oil. The response to an intra-arterial injection of norepinephrine was compared with an intravenous injection of the same dosage.

Problems associated with the design and construction of transducer elements are discussed in some detail. The use of the instrument is described and problems which tend to arise are listed.

ACKNOWLEDGMENT

The author would like to acknowledge the sponsorship of Dr. Ernest Dobson and to thank him both for his help in directing the research involved, and for his personal assistance in preparing this dissertation. The author would also like to thank Dr. John Gofman and Dr. Paola Timiras for their critical appraisal of this work. Throughout the course of the project, Mr. Paul Salz has been my friend and associate. In our association we demonstrated the efficacy of teamwork between a biophysicist and an electronics engineer working together in the design of medical instrumentation. The author would like to thank Mr. Charles Dols for his generosity in allowing the use of his facilities and for the time given the author in discussing various problems, and to Mr. Howard Rogers for the help given in editing this dissertation.

The author would especially like to thank Mr. Robert San Souci, Business Manager of the Donner Laboratory, for his patience and far-sightedness. Mr. San Souci, in addition to efficiently handling any business crisis that arose, also proved his friendship in many other ways. His efforts have played no small part in the success of this project.

The training received under Professor Ralph W. Stacy of Ohio State University has considerably helped the author in pursuing this project. Professor Stacy continued to lend support and give advice even after the author had left Ohio State and was 3000 miles away.

Thanks of a special sort are due to the National Institutes of Health for financial support as a Pre-Doctoral Fellow rendered during the last two-and-a-half years. Many other people, too many to name here, have contributed to the author's success in this project. He would like to express his gratitude to them.

This work was done under the auspices of the U.S. Atomic Energy Commission.

REFERENCES

1. T. Martin, Faraday's Diary, Vol. 1 (G. Bell and Son, London, England, 1932), pp. 409-411.
2. F.B. Young, H. Gerrard, and W. Jevans, On Electrical Disturbances Due to Tides and Waves, Phil. Mag. 40, 149 (1920).
3. E. J. Williams, The Induction of Electromotive Forces in a Moving Liquid by a Magnetic Field and Its Application to an Investigation of the Flow of Liquids, Proc. Phys. Soc. (London) 42, 466 (1930).
4. P. Fabre, Utilisation des forces electromatrices d'induction pour l'enregistrement des variations de vitesse des liquides conducteurs; un nouvel hemodrographie sur palette dans le sang, Compt. rend. 194, 1097 (1932).
5. A. Kolin, An Electromagnetic Flowmeter. Principles of the Method and its Application to Blood-Flow Measurements, Proc. Soc. Exptl. Biol. Med. 35, 53 (1936).
6. B. Wetterer, Eine neue Methode zur Registrierung der Blutstromungsgeschwindigkein am uneroffneten Gefäss, Z. Biol. 98, 26 (1937).
7. A. Kolin and R.T. Kado, Miniaturization of the Electromagnetic Blood Flowmeter and its Use for the Recording of Circulatory Responses of Conscious Animals to Sensory Stimuli, Proc. Natl. Acad. Sci. D.S. 45, 1312 (1959).
8. H.W. Shirer, R.B. Shackelford, and K.E. Jochim, A Magnetic Flowmeter for Measuring Cardiac Output, Proc. I.R.E. 47, 1901 (1959).
9. A. Kolin, Improved Apparatus and Technique for Electromagnetic determination of Blood Flow, Rev. Sci. Instr. 23, 235 (1952).
10. W.R. Hogg, E. Mittelmann, and D.S. Schover, Electronic Circuit problems in Electromagnetic Flow Measurements, Proc. Natl. Electronics Conf. 8, 127 (1953).
11. V. Cushing, Induction Flowmeter, Rev. Sci. Instr. 29, 692 - 697 (1959).

12. James J. Brophy, Low-Noise Modifications of the Tektronix Type-122 Preamplifier, Rev. Sci. Instr. 26, 1076 (1955).

13. J. Millman and H. Taub, Pulse and Digital Circuits (McGraw-Hill Publishing Co., New York, N.Y., 1956).

14. Handbook of Preferred Circuits, Navy Aeronautical Electronic Equipment, National Bureau of Standards, NAVAER 16-1-519, Aug. 1, 1958.

15. A. Kolin, in Medical Physics, Otto Glasser, Ed. (Year Book Publishers, Chicago, Ill., 1960).

16. M.P. Spencer and A.B. Dennison, in Methods in Medical Research, Vol. 8, H.D. Bruner, Ed. (Year Book Publishers, Chicago, Ill., 1960).

17. E.L. Dobson and G.F. Warner, Measurement of Regional Sodium Turnover Rates and Their Application to the Estimation of Regional Blood Flow, Am. J. Physiol. 189, 269-276 (1957).

18. J.R. Elkinton and T.S. Donowski, The Body Fluids (Williams and Wilkins Co., Baltimore, Md., 1955), Table 3-I, p. 70.

19. L.S. Goodman and A. Gilman, The Pharmacological Basis of Therapeutics (MacMillan Co., New York, N.Y., 1956).

20. D.J. Ferguson and H.S. Wells, Frequencies in Pulsatile Flow and Response of Magnetic Meter, Circulation Research 7, 336 - 341 (1959).

21. Ralph W. Stacy (Department of Physiology, Ohio State University), personal communication.

22. J.R. Wormersley, An Elastic Tube Theory of Pulse Transmission and Oscillatory Flow in Mammalian Arteries, Wright Air Development Center, Technical Report TR 56-614, Jan. 1957.

23. D.A. McDonald, The Relation of Pulsatile Pressure to Flow in Arteries, J. Physiol. 127, 533 - 552 (1955).

This report was prepared as an account of Government sponsored work. Neither the United States, nor the Commission, nor any person acting on behalf of the Commission:

A. Makes any warranty or representation, expressed or implied, with respect to the accuracy, completeness, or usefulness of the information contained in this report, or that the use of any information, apparatus, method, or process disclosed in this report may not infringe privately owned rights; or

B. Assumes any liabilities with respect to the use of, or for damages resulting from the use of any information, apparatus, method, or process disclosed in this report.

As used in the above, "person acting on behalf of the Commission" includes any employee or contractor of the Commission, or employee of such contractor, to the extent that such employee or contractor of the Commission, or employee of such contractor prepares, disseminates, or provides access to, any information pursuant to his employment or contract with the Commission, or his employment with such contractor.