UCRL 9438 Rev

UNIVERSITY OF CALIFORNIA

Ernest O. Lawrence Radiation Laboratory

TWO-WEEK LOAN COPY

This is a Library Circulating Copy which may be borrowed for two weeks. For a personal retention copy, call Tech. Info. Division, Ext. 5545

BERKELEY, CALIFORNIA

DISCLAIMER

This document was prepared as an account of work sponsored by the United States Government. While this document is believed to contain correct information, neither the United States Government nor any agency thereof, nor the Regents of the University of California, nor any of their employees, makes any warranty, express or implied, or assumes any legal responsibility for the accuracy, completeness, or usefulness of any information, apparatus, product, or process disclosed, or represents that its use would not infringe privately owned rights. Reference herein to any specific commercial product, process, or service by its trade name, trademark, manufacturer, or otherwise, does not necessarily constitute or imply its endorsement, recommendation, or favoring by the United States Government or any agency thereof, or the Regents of the University of California. The views and opinions of authors expressed herein do not necessarily state or reflect those of the United States Government or any agency thereof or the Regents of the University of California.

Publication in Nuclear Physics

UCRL-9438-Rev.

UNIVERSITY OF CALIFORNIA
Lawrence Radiation Laboratory
Berkeley, California

Contract N. W-7405-eng-48

THE ENERGY LEVELS OF U^{233}

R. G. Albridge, J. M. Hollander, C. J. Gallagher, and J. H. Hamilton

October 1960

THE ENERGY LEVELS OF U^{233}

R. G. Albridge, J. M. Hollander, C. J. Gallagher, and J. H. Hamilton

October 1960

ABSTRACT

The beta decay of Pa^{233} was studied by means of high resolution permanent-magnet electron spectrographs, an iron-free double-focusing beta spectrometer, and a curved-crystal gamma ray spectrometer. Measured valued of relative conversion electron and photon intensities are used to determine conversion coefficients and to assign multipolarities and multipole mixing ratios for the transitions in U^{233}. The quantum assignments of the levels in U^{233} are considered, by comparisons of observed beta and photon branching ratios to those predicted by theory. Several new transitions were observed and some of these are used to postulate new levels in U^{233}.

THE ENERGY LEVELS OF U^{233}+

R. G. Albridge and J. M. Hollander++
University of California Lawrence Radiation Laboratory
Berkeley, California
and
C. J. Gallagher*
California Institute of Technology
Pasadena, California
and
J. H. Hamilton**
Vanderbilt University
Nashville, Tennessee

INTRODUCTION

The energy levels of U^{233} have been studied by a number of workers, and the general features of the level scheme are well known. In their comprehensive review of the single particle levels of spheroidally deformed nuclei, Mottelson and Nilsson[1] have discussed these levels in terms of four intrinsic states, excited either by Coulomb excitation of U^{233}, alpha decay of Pu^{237}, or beta decay of Pa^{233}. The scheme as summarized by Mottelson and Nilsson is shown in Figure 1.

The electron and photon spectra of Pa^{233} were first seriously investigated by Hok et al.,[2] Keller and Cork,[3] and Brodie.[4] A discussion of the U^{233} levels has been given by Newton,[5] who observed the Coulomb excitation of two rotational levels in U^{233}. More recently, and concurrently with this study, two other investigations of Pa^{233} decay have been reported, by Albouy and Valadares[6] and by Bisgård, Dahl, and Olesen.[7] The results of all these studies form a generally consistent picture of Pa^{233} decay.

+This work was performed under the auspices of the U.S. Atomic Energy Commission.

++1958-1959 Guggenheim Fellow at University of Uppsala, Uppsala, Sweden.

*Presently at Institute for Theoretical Physics, Copenhagen, Denmark.

**1958-1959 N. S. F. Post Doctoral Fellow at University of Uppsala, Uppsala, Sweden.

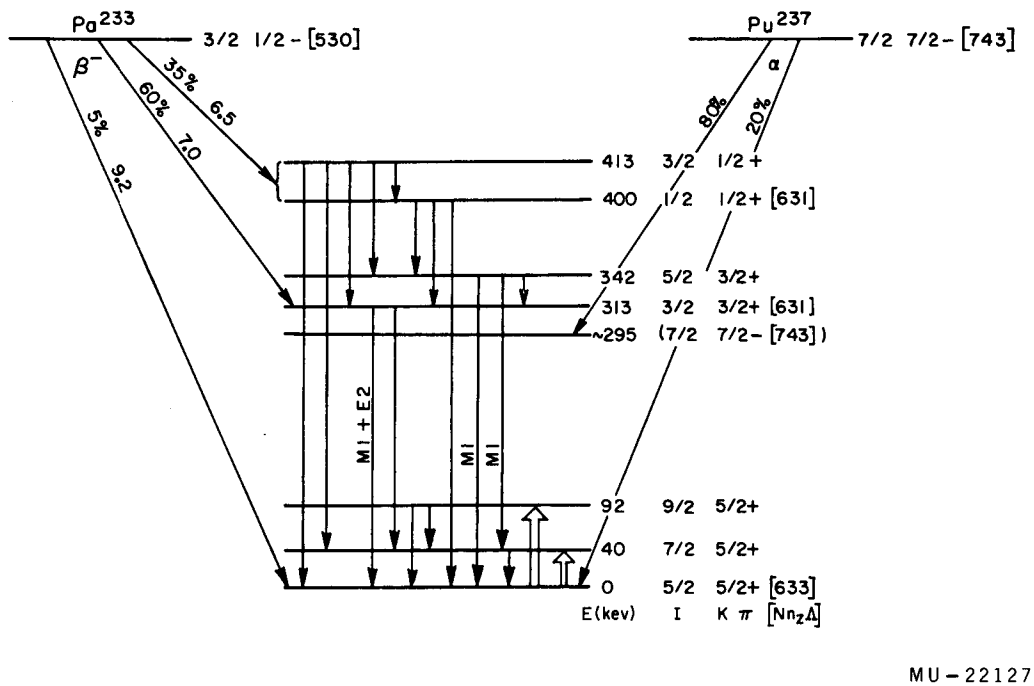

Fig. 1. Basic level scheme of U^{233} as summarized by Mottelson and Nilsson.[1]

A primary aim of this work was to obtain accurate measurements with high-resolution equipment of both the energies and intensities of the conversion electron and photon lines, in order that multipolarities, mixing ratios, and transition intensities could be obtained. We hoped that the correlation of these data with the transition intensities predicted by the theory of Bohr and Mottelson[8] would serve as a test of the quantum assignments of the nuclear energy levels of U^{233}. In addition, the ability to produce very intense sources of Pa^{233} by the neutron irradiation of Th^{232} which could be studied with high-resolution equipment offered the hope of discovering weak, previously unobserved, transitions.

2. EXPERIMENTAL EQUIPMENT-ELECTRONS

The internal conversion spectrum was measured with several types of instruments:

(a) Permanent-magnet 180° spectrographs with field strengths 50, 100, 215 and 340 gauss. The resolution obtained with these spectrographs is $\Delta\rho/\rho \sim 0.1\%$.

The relative intensities of the conversion lines recorded photographically by the permanent-magnet spectrographs on Eastman no-screen X-ray emulsion were determined by two different means - densitometer tracings and visual estimates. The densitometer tracings were analyzed by the method of Mladjenović and Slätis.[9]

In some instances the ratio of background to line intensity was too high to permit an accurate analysis by means of densitometry. In these cases relative intensities were obtained from visual comparisons of plates exposed for different periods of time. Two photographic plates differing in exposure by a known factor were placed one on-top-of the other with emulsions touching, and were viewed over a diffuse source of light. Two lines that were to be analyzed were lined up beside each other and their relative intensities compared. If, under these conditions, the intensities of the lines appeared to be equal, then the absolute intensities of the lines were assumed to differ by the same factor as the exposures. By superimposing the plates in this manner differences in the backgrounds of the plates tend to cancel because both lines are viewed through the same background. In those cases in which comparison could be made the deviation between intensities obtained by densitometry and visual estimates was $\approx 10\%$. In all cases corrections were made for instrument geometry (by

multiplying by the radius of curvature of the electron path.[9]) for film efficiency, and for decay during exposure.

(b) A permanent-magnet pre-accelerating spectrograph, used to measure the low-energy conversion and Auger electron spectrum. The field strength of this instrument is 50 gauss, and it has been described by Albridge.[10]

(c) The 30-cm. iron-free double-focusing spectrometer located at the Physics Institute, University of Uppsala, Sweden.[11] A resolution equal to or better than 0.14% was obtained with conversion lines of energy $\geq$ 65 kev, but because of source thickness, the resolution became poorer at lower energies (e.g., 0.24% at 23 kev). This instrument was used primarily for determinations of the relative intensities of the stronger internal conversion lines. The electron line intensities were assumed to be proportional to the product of peak height times line width. Recording was by a G-M counter with a 2-kev window cutoff.

3. EXPERIMENTAL EQUIPMENT- PHOTONS

The DuMond bent-crystal spectrometer Mark I,[12] located at the California Institute of Technology, Pasadena, was used for precision measurements of the energies and intensities of the X-ray and gamma-ray lines. Two different detector arrangements were used. The initial experiment employed a 3-inch diameter by 2-inch cylindrical sodium iodide crystal connected to a single-channel pulse-height analyzer with chart recorder. Later, a 5-inch diameter by 3-inch cylindrical sodium iodide crystal was used with the single-channel analyzer for energy determinations and with a 100-channel Penco Gamma Analyzer for intensity measurements.

The instrument is such that the width at half maximum of the recorded peak ($\Delta\lambda$) is constant over the wave length range; $\Delta\lambda$ is of the order of 0.28 x-unit. The resolution, ($\Delta\lambda/\lambda$) varies with λ. The resolution is of order 0.2% at 100 kev and 0.9% at 400 kev. The transmission is determined almost completely by the product of the solid angle subtended by the bent crystal at 2 meters from a 0.008-inch diameter x 1-inch high source, and the $1/E^2$ dependence of the reflectivity of the bent quartz crystal.

The gamma ray spectrum was also examined by use of a 100-channel Penco pulse-height analyzer with a 3 x 3-inch NaI(Tℓ) crystal. The resolution was 8% at 560 kev and 10% at 280 kev.

4. PREPARATION OF SOURCES

For the measurements performed in Berkeley, the Pa^{233} was prepared by neutron irradiation of 0.5-to 1.0 gm. quantities of Th^{232} metal foil in the Materials Testing Reactor at Arco, Idaho. The Uppsala sample was irradiated at the reactor in Kjeller, Norway.

The purification procedure for carrier-free protactinium was typically the following:

The thorium was dissolved in a 10 M HCl-0.1 M HF solution and the sample was passed through a Dowex A-1 column after the fluoride had been complexed with H_3BO_3. The protactinium was eluted with 3 M HCl, extracted from 6.9 M HCl into di-isopropyl ketone, and back-extracted into 2 M HCl. The HCl concentration was increased to 10 M, and the protactinium was again adsorbed onto a Dowex A-1 column. Possible zirconium impurities were then eluted with 6.0 M HCl. The protactinium was finally eluted with a 9.0 M HCl - 0.1 M HF solution.

Sources used in the permanent-magnet spectrographs were prepared by electrodeposition onto 0.25 mm - diameter platinum wires; the Uppsala sample was electrodeposited onto a 0.2 mm nickel wire. An ammonium fluoride electrolyte (pH 6.3) was used with a plating current of 100 to 150 ma. These sources varied in strength from 0.02 to 50 r/hr as measured by a beta-gamma survey meter at a distance of approximately 3 inches. A 0.5 mm wide flat source (on Pt-coated Mylar) was also used in Uppsala as a check on some of the intensities.

Two sources were prepared for the Pasadena bent-crystal spectrometer. The first was electroplated onto a 0.12 mm-diameter platinum wire in the manner described above. This wire was threaded into a 0.2 mm i.d. quartz capillary which was then sealed with a torch. The source was measured as greater than 100 r/hr of gamma activity at a distance of approximately 4 inches. Because x-ray emission of the platinum wire (induced by the intense beta source) proved troublesome, a second source was prepared without the wire. Approximately 3.5 mg

of ThO_2 in a 0.008-in.-diameter quartz capillary was neutron-irradiated for two months in the Materials Testing Reactor, at a flux of $\sim 3 \times 10^{14}$ neutrons/cm^2/sec. The irradiated ThO_2 in the capillary was itself used as the spectrometer source without chemical treatment.

5. CONVERSION-ELECTRONS – EXPERIMENTAL DATA

The Pa^{233} conversion-electron data, taken with the Berkeley permanent-magnet spectrographs and the Uppsala iron-free spectrometer, are summarized in Table I. The unassigned lines, listed in Table VII, are discussed separately. The lines of the 17-kev transition and the L lines of the 28-kev transition were detected with the pre-accelerator spectrograph.[10] The relative precision of measurement of the energies of lines taken on a single spectrograph is within 0.1% except for extremely weak or extremely strong lines. The transition energies listed in Table I are weighted averages of several determinations.

Only relative conversion-electron intensities were determined directly in this work. The absolute intensities listed in Table I were obtained by a normalization procedure described in Section 9. The intensities listed from permanent-magnet spectrograph plates are averages of from two to seven visual estimates and, when possible, two or three densitometer traces.

The intensities of the stronger conversion lines were measured with the Uppsala iron-free double-focusing spectrometer. Because of the very thin G-M counter window used, there was no need to make window-absorption corrections. However, the intensities of the low-energy lines are subject to uncertainties arising from source absorption effects; these are manifested by the observed line widths of the 40-kev L_{II} and L_{III} lines, which are $\sim$0.4% and 0.24% respectively, as compared with widths of 0.11% to 0.15% for the higher energy lines. It was not possible to measure accurately the full area of each conversion line because of the presence of large "tails", so the area was approximated by multiplying the observed peak-height of each line by its half-width.

In most cases where relative intensities were measured

Table I

Pa^{233} conversion-electron data

Electron energy (kev)	Conversion shell	Transition energy[a] (kev)	Selected transition energy[b] (kev)	Conversion-electron intensities[c] (percent beta decay) Berkeley P.M.	Uppsala Iron-free	Selected value	Remarks
11.72	M_I	17.27					
12.07	M_{II}	17.25					
12.96	M_{III}	17.26					
15.78	N_I	17.22					
15.97	N_{II}	17.24					
			17.26				
6.76	L_I	28.52					
7.57	L_{II}	28.51					
11.37	L_{III}	28.53					
23.01	M_I	28.56		1.7	2.7	2.2	
23.37	M_{II}	28.55		0.84	0.75	0.8	
24.26	M_{III}	28.56		0.90	--	0.85	
27.06	N_I	28.50					
27.22	N_{II}	28.49					
27.50	N_{III}	28.54					
28.25	O_I	28.57					
			28.54				
18.62	L_I	40.38		1.0	--	1.3	
19.42	L_{II}	40.36		3.7	5.0	4.4	
23.15	L_{III}	40.31		2.7	4.3	3.5	
34.73	M_I	40.28					
35.10	M_{II}	40.28		0.62	1.4	1.1	
35.96	M_{III}	40.26		0.69	1.3	1.0	
38.99	N_{II}	40.26					
39.24	N_{III}	40.28					
40.06	O_{II}	40.31					
			40.29				
36.92	L_{II}	57.86					L_I line masked by 40-M_{III}

Table I (continued)

Electron energy (kev)	Conversion shell	Transition energy[a] (kev)	Selected transition energy[b] (kev)	Conversion-electron intensities[c] (percent beta decay) Berkeley P.M.	Uppsala Iron-Free	Selected value	Remarks
40.74	L_{III}	57.90	57.90				M_{III} line masked by 75-L_I
53.37	L_I	75.13		7.2	8.6	8.6	Masks 58-M_{III}
54.14	L_{II}	75.08		1.0	1.2	1.2	
58.01	L_{III}	75.17		0.11	--		
69.57	M_I	75.12		2.2	2.1	2.1	
69.90	M_{II}	75.08					
70.81	M_{III}	75.11					
73.65	N_I	75.09		0.69	--	0.69	
73.82	N_{II}	75.09					
74.77	O_I	75.09		0.27	--	0.27	
75.06	P_I	~75.1					
			75.13				
64.75	L_I	86.51		8.5	9.4	9.4	
65.50	L_{II}	86.44		1.1	1.3	1.3	
69.4	L_{III}			--	0.26	0.26	
80.85	M_I	86.40		2.5	2.6	2.6	
81.14	M_{II}	86.32		0.42	0.58	0.58	
82.2	M_{III}			--	0.13	0.13	Masked by 103-L_I
84.93	N_I	86.37		0.65	--	0.65	
86.05	O_I	86.37		0.16	--	0.16	
			86.45				
81.91	L_I	103.7		2.4	2.4	2.4	Masks 86-M_{III}
82.68	L_{II}	103.6		0.35	0.44	0.44	
86.37	L_{III}	103.5		0.10	0.10	0.10	
98.11	M_I	103.7		0.72	--	0.72	
98.39	M_{II}	103.6					
99.36	M_{III}	103.7					

Table I (continued)

Electron energy (kev)	Conversion shell	Transition energy[a] (kev)	Selected transition energy[b] (kev)	Conversion-electron intensities[c] (percent beta decay) Berkeley P.M.	Uppsala Iron-Free	Selected value	Remarks
102.2	N_I	103.7		0.32	--	0.32	
103.3	O_I	103.7					
			103.6				
155.8	K	271.4		0.050	--	0.050	
250.6	L_I, L_{II}	271.5		0.049	--	0.049	
254.4	L_{III}	271.5		≤0.037	--	≤0.037	
266.0	M_I, M_{II}	271.6					
269.9	N_I, N_{II}	271.3					
			271.5				
184.4	K	300.0		4.9	5.2	5.2	
278.1	L_I	299.9		1.1	0.81	0.81	
278.5	L_{II}	299.4		0.12	0.12	0.12	
	L_{III}			(est. 0.012)	--	--	Masked by 398-K
294.4	M_I	299.9		0.27	0.23	0.23	Masks 312 L_{III}
298.3	N_I	299.7		0.073	--	0.073	
300.0	O_I	300.3		(est. 0.021)	--	--	Masked by 416-K
			299.8				
196.2	K	311.8		(very strong)	27	27	
289.7	L_I	311.4		4.2	4.6	4.6	
290.7	L_{II}	311.6		0.50	0.43	0.43	
	L_{III}			(est. 0.019)	--	--	Masked by 300-M_I
306.3	M_I	311.9		1.3	1.0	1.0	
306.9	M_{II}	312.1		--	--	--	
310.0	N_I	311.4		0.46	--	0.46	
311.4	O_I	311.8		0.11	--	0.11	
			311.7				
224.9	K	340.5		(2.3)[d]	2.3	2.3	
318.5	L_I	340.3		0.50	--	0.50	
319.5	L_{II}	340.5		0.065	--	0.065	
323.0	L_{III}	340.1		--	--	--	

Table I (continued)

Electron energy (kev)	Conversion shell	Transition energy[a] (kev)	Selected transition energy[b] (kev)	Conversion-electron intensities[c] (percent beta decay) Berkeley P.M.	Uppsala Iron-Free	Selected value	Remarks
334.8	M_I	340.3		0.16	--	0.16	
339.5	N_I	340.9		0.064	--	0.064	
340.1	O_I	340.4					
			340.3				
259.9	K	375.5		(0.049)[e]	0.038	0.038	
353.6	L_I	375.3		[0.020][f]	--	[0.010]	
354.2	L_{II}	375.2		[0.043]	--	[0.021]	
358.4	L_{III}	375.5		[0.021]	--	[0.011]	
369.8	M_I	375.4		---	--	---	
			375.5				
282.7	K	398.3		(0.065)[e]	--	0.065	Masks 300-L_{III}
376.6	L_I	398.3		[0.039][f]	--	[0.020]	M_{III} line masked by 416-L_I,L_{II}
377.3	L_{II}	398.3		[0.067]	--	[0.035]	
381.3	L_{III}	398.4		[0.021]	--	[0.011]	
			398.3				
300.0	K	415.6		(0.16)[e]	0.16	0.16	Masks 300-O_I
393.7	L_I	415.5		[0.070][f]	--	[0.035]	Masks 398-M_{III}
394.4	L_{II}	415.3		[0.049]	--	[0.025]	Masks 398-M_{III}
398.3	L_{III}	415.4		[0.013]	--	[0.006]	
410.0	M_I	415.5					
413.8	N_I	415.3					
			415.6				

a. Electron binding energies were taken from Hill et al., Reference 13.

b. Selected values are weighted averages of the experimental values.

c. Measured relative intensities have been converted to absolute values by a method described in section 9.

d. Photographic intensities normalized to K (340) = 2.3.

e. Normalized to K (416) = 0.16. See section 5.

f. Square brackets indicate an uncertainty in the normalization factor used for these values. See section 5.

with both the photographic and the double-fucusing instruments, the Uppsala values were selected, though for the low-energy lines, where the Uppsala values are also uncertain, an average value is used. A large number of conversion lines observed in the Berkeley spectrographs were, for lack of time, not measured in the iron-free spectrometer; for example the weaker members of L and M subshell groups. In these cases the relative subshell intensities obtained from the photographic plates were taken as "final" with a normalization of the intensity of the strongest subshell line to the iron-free spectrometer value. In a few cases two conversion lines of different transitions overlap. In these cases the intensities of the two lines were estimated from the assigned multipolarities of the transitions. Estimated values are so indicated in Table I. The electron intensities reported there are probably accurate within ~20% for the strong and medium lines, and within a factor of two for the weak lines.

The interpretation of the two highest energy levels in U^{233} depends strongly on the assignments of multipolarities to the 375-, 398-, and 416-keV transitions. The multipole assignments of these transitions in turn depend upon the measured intensities of their conversion lines. Because of the importance of these intensity values and of the difficulty in obtaining them, the following special comments are made:

The intensities of the K-lines of the 375-, 398-, and 416-keV transitions relative to each other were carefully measured from the photographic plates, but they could not be measured in this way with any accuracy relative to the K-line of the 312-keV transition, which is very much stronger. However, the intensity of the 416-keV K line relative to the 312-keV K line was established with the Uppsala iron-free spectrometer and also by an independent measurement with a 25-cm. (iron) double-focusing spectrometer in Berkeley, so this determination was used to fix the intensities of these three K-lines.

The intensities of the L lines of the 375-, 398-, and 416-keV transitions were determined only from the photographic spectrographs. A problem arose in normalizing these values to the intensity scale used for reporting the data, both because the lines are quite weak and because

the lower-energy portion of the photographic plate on which the lines were seen is so dark that it was difficult to observe a line of known intensity to which the unknown lines could be normalized. Fortunately, it was possible to bring about this normalization in an indirect manner. The values of the total intensities of the L lines of the 375- and 416-keV transitions were carefully measured with the Berkeley 25-cm. double-focusing spectrometer. This measurement indicated that the intensity values of these lines determined from the photographic plates were too large by a factor of approximately two; hence the spectrographically determined intensity values for these L lines have been corrected by dividing by the factor two. These corrected values are listed as the selected values in Table I. Because of these uncertainties the intensities of these lines are enclosed in square brackets. The L-subshell ratios of these transitions are of course not affected by this normalization uncertainty.

6. PHOTONS -- EXPERIMENTAL DATA

The gamma-ray and x-ray data taken on the Pasadena bent-crystal spectrometer are listed in Table II. The method of determining the energy of an observed photon is described fully by DuMond.[12] The limits of error quoted are based upon estimates of the precision with which the center positions of the line profiles were determined. The agreement between the measured and accepted energies of the uranium and platinum K x-rays[17] indicates that the accuracy of the energy measurements is good.

The photon relative-intensity values were obtained by positioning the source at the angular position determined during the energy measurements as the profile center, and recording the pulse height spectrum from the NaI crystal with a pulse-height analyzer, in order to differentiate the background counting rate from the monochromatic gamma rays. The values obtained by means of the wire source and the single-channel analyzer, and those obtained with the ThO_2 source and the 100-channel analyzer are listed in Table II.

Table II

Pa^{233}: photons measured with the Pasadena bent-crystal spectrometer

Gamma rays

Energy (kev)		Intensity (percent beta decay)			
This work	Browne[a]	Pt wire source	ThO_2 source	Average	Browne[a]
	28.67 ± 0.02				0.060
40.35 ± 0.01	40.47 ± 0.1	0.015		0.015	0.048
41.65 ± 0.02		(weak)			
75.28 ± 0.01	75.4 ± 0.2		0.82	0.82	1.3
186.59 ± 0.01	87.0 ± 0.3	2.02	1.5	1.7	[1.7]
103.86 ± 0.02		0.62	0.70	0.66	
145.42 ± 0.05			0.44	0.44	
271.62 ± 0.23		0.33	0.25	0.29	
300.20 ± 0.24		6.0	6.5	6.3	
311.91 ± 0.13		[34]	[34]	[34]	
340.51 ± 0.18		3.9	3.8	3.9	
375.35 ± 0.32		0.51	0.61	0.56	
398.57 ± 0.40		1.1	1.0	1.1	
415.87 ± 0.42		1.4	1.6	1.5	

X-rays

Energy (kev)		Intensity (percent beta decay)					Transition
This work	Accepted[b]	Pt wire source	ThO_2 source	Average	Browne[a]	Beckman[c]	
Uranium							
94.655	94.664	9.5	8.3	[8.8]	[8.8]	8.8	$K\text{-}L_{II}(K\ \alpha_2)$
98.441	98.442	18	14	16	17	16	$K\text{-}L_{III}(K\ \alpha_1)$
110.421	110.428	2.3	1.1	1.7		2.3	$K\text{-}M_{II}(K\ \beta_3)$
111.297	111.307	4.1	3.4	3.8		4.4	$K\text{-}M_{III}(K\ \beta_1)$
114.502	114.568	1.5	2.0	1.7		2.0	$K\text{-}N_{II},N_{III}$ $(K\ \beta_2)$
115.405	115.412	0.42	0.42	0.42		0.48	$K\text{-}O_{II},O_{III}$
Platinum							
65.127	65.122						$K\text{-}L_{II}(K\ \alpha_2)$
66.861	66.831						$K\text{-}L_{III}(K\ \alpha_1)$
75.292							75-kevγ+ $K\ \beta_3$
75.754	75.749						$K\text{-}M_{III}(K\ \beta_1)$

(a) Reference 16; (b) Reference 17; (c) Reference 18.

These intensities have been corrected for detector efficiency and the photopeak-to-total ratio.[19] Corrections were made for absorption in the source, SiO_2 capsule, air between source and detector, and the aluminum cover of the detector crystal. With the exception of the source absorption these corrections were made by the direct use of the exponential attenuation equation and the attenuation coefficients of Grodstein.[20] A graphical integration method was used to calculate the source absorption.[10]

The largest correction applied to the gamma-intensity data arises from the energy dependence of the reflectivity of the quartz crystal. Lind et al.[21] have reported that for a bent quartz crystal the ratio of the diffracted beam to the incident beam (the reflection coefficient) is proportional to $1/E^2$. The intensity data in Table II were normalized to the 340-kev transition, which was chosen because it is near the middle of the energy range investigated and because the majority of the gamma rays observed have energies close to 340 kev. The magnitude of the correction factor varies from 0.014 for the 40-kev transition to 1.49 for the 416-kev transition. The averages of two intensity determinations have been chosen as the final values.

Gamma-ray data published by Browne[16] are also presented in Table II. The energy data of Browne are in reasonably good agreement with the data of this work; however, the relative intensities of the low-energy gamma rays are not in agreement. For the purpose of comparison the intensity data of Browne were normalized to the 87-kev photon intensity. The values of this work and of Browne, so normalized, deviate considerably at lower energies. This deviation is such that the ratio of Browne's intensites to those of this work, for photons of lower energy than 87 kev, varies linearly with energy, suggesting a systematic error in one of the sets of data. The cause of the deviation is unknown.

In Table II uranium K-x-ray relative-intensity data of Beckman[18] and of Browne[16] are also listed, normalized to a value of 8.8 for the K α_2 line. The relative intensities of this work are seen to be in close agreement with those of the previous workers.

Since the intrinsic line widths of X-rays are not narrow relative to the instrumental window width of the crystal spectrometer, whereas those of gamma rays are, it is necessary to normalize differently X-ray and gamma ray intensities determined by peak heights. The normalization of the K X-ray intensities was done by setting the total intensity equal to 34% of the beta disintegrations. This value for the total X-ray intensity was determined indirectly, as follows:

(a) The total K-conversion line intensity is 35.1% of the total number of decays. Correcting for the fluorescence yield (0.963), the total K X-ray intensity is calculated to be 34%.

(b) The total intensities of the KLL Auger lines were determined[10] as 0.68% per beta disintegration (including estimates of 0.02% and 0.08% for the unobserved $KL_{II}L_{II}$ and $KL_{III}L_{III}$ lines). From the tables of Wapstra et al.[17] we take the ratio KLY/KLL and KXY/KLL to be 0.7 and 0.05, respectively, for Z=90, and calculate the total K-Auger intensity to be 1.2%. The K X-ray intensity is therefore 1.2%/(1-0.963) = 32%.

7. THE 312-KEV MAGNETIC DIPOLE TRANSITION

From a measurement of L-subshell conversion ratios and K-conversion coefficient, the multipolarity of the 312-kev transition is determined to be essentially pure magnetic dipole. These data are: The L_I/L_{II} ratio, determined with the iron-free spectrometer, is 10.5 ± 1. The theoretical value[2] (Table III) for M1 radiation is 10. E2 admixture would lower the observed L_I/L_{II} ratio markedly, because E2 radiation favors L_{II} conversion. The error limit as given would indicate a maximum of 2% E2 admixture in this transition.

A more sensitive indication of the extent of E2 admixture should be given by the L_I/L_{III} ratio, but here unfortunately the L_{III} line is unresolved from the much stronger 300-kev M_I line. Our measured intensity ratio of $(300\ L_I)/(300\ M_I + 312\ L_{III})$ lies between 3.5 and 4.0. Since 3.5 is approximately the value expected for the L_I/M_I ratio of the 300 kev transition alone, the contribution of the

Table III

Experimentally determined conversion coefficients of transitions in U^{233}

	Experimental values											
ENERGY (kev)	α_K	α_{L_I}	$\alpha_{L_{II}}$	$\alpha_{L_{III}}$	α_{M_I}	$\alpha_{M_{II}}$	$\alpha_{M_{III}}$	α_{N_I}	α_{O_I}	$\alpha_{\Sigma L_i}$ [a]	$\frac{\alpha_K}{\alpha_{\Sigma L_i}}$ [a]	Multipole assignment
28	--	--	--	--	$M_I/M_{II}/M_{III}$=1.0/0.36/0.39				--	--	--	97% M1 3% E2
40	--	87	293	234	--	73	67	--	--	614	--	70% M1 30% E2
75	--	11	1.5	0.16	2.6	--	--	0.84	0.33	13	--	99% M1 1% E2
87	--	5.5	0.76	0.15	1.5	0.34	0.076	0.38	0.09	6.4	--	98% M1 2% E2
104	--	3.6	0.67	0.15	1.1	--	--	0.48	--	4.5	--	96% M1 4% E2
272	0.17	0.17		≤0.13	--	--	--	--	--	≤0.30	≥0.56	E2
300	0.83	0.13	0.019	--	0.036	--	--	0.012	--	0.15	5.5	88% M1 12% E2
312	0.79 [b]	0.136	0.013	--	0.029	--	--	0.014	0.003	0.15	5.2	M1
340	0.59	0.13	0.017	--	0.041	--	--	0.02	--	0.14	4.0	90% M1 10% E2
375	0.068	0.018	0.037	0.020	--	--	--	--	--	0.075	0.90	E2
399	0.059	0.018	0.032	0.010	--	--	--	--	--	0.060	1.0	E2
416	0.11	0.023	0.017	0.004	--	--	--	--	--	0.044	2.5	18% M1 82% E2

Table III (continued)

Theoretical values[c]											
M1						E2					
α_K	α_{L_I}	$\alpha_{L_{II}}$	$\alpha_{L_{III}}$	$\alpha_{\Sigma L_I}$[a]	$\frac{\alpha_K}{\alpha_{\Sigma L_1}}$[a]	α_K	α_{L_I}	$\alpha_{L_{II}}$	$\alpha_{L_{III}}$	$\alpha_{\Sigma L_1}$[a]	$\frac{\alpha_K}{\alpha_{\Sigma L_1}}$[a]
--	$M_I/M_{II}/M_{III}$=1.0/0.1/0.0047			--	--	--	$M_I/M_{II}/M_{III}$=1.0/28/28			--	--
--	50	4.2	0.29	54	--	--	16	400	390	806	--
--	8.9	0.75	0.043	9.7	--	--	1.2	23	17	41	--
--	5.8	0.49	0.027	6.3	--	--	0.60	11	8.0	20	--
--	3.5	0.30	0.016	3.8	--	--	0.30	4.9	3.2	8.0	--
1.2	0.23	0.023	0.00093	0.25	4.7	0.089	0.023	0.082	0.033	0.138	0.65
0.86	0.17	0.017	0.00068	0.19	4.6	0.075	0.018	0.055	0.020	0.073	1.0
0.79	0.16	0.016	0.00062	0.18	4.5	0.070	0.017	0.048	0.017	0.065	1.1
0.60	0.12	0.012	0.00046	0.13	4.5	0.059	0.014	0.033	0.011	0.047	1.3
0.48	0.098	0.0099	0.00036	0.11	4.4	0.051	0.012	0.024	0.0076	0.044	1.2
0.40	0.081	0.0082	0.00030	0.089	4.5	0.045	0.010	0.018	0.0055	0.034	1.3
0.36	0.074	0.0076	0.00027	0.082	4.4	0.043	0.0094	0.016	0.0047	0.030	1.4

a. α_{L_1} refers to the sum of the L-conversion coefficients determined in this work. α_{L_1} differs from α_L (total L-conversion coefficient) in those cases in which not all of the L-subshell electron intensities were measured.

b. Relative photon intensities were normalized to relative electron intensities by means of the theoretical α_K^{312}, which is 0.79 (section 8).

c. Reference 22.

312-kev L_{III} line to the composite line must be quite small. A quantitative estimate of the amount of 312-L_{III} in the composite line indicates that the E2 admixture in the 312-kev transition lies between zero and 5%.

An experimental measurement of the K-conversion coefficient of this transition was also made, with four samples of varying strengths, by use of a thick-lens spectrometer and a 100-channel scintillation spectrometer. The photon spectrum is shown in Fig. 2. Normalization between the two instruments was effected with the 570-kev transition of Bi^{207}, whose conversion coefficient is known (α_K = 0.015 $\pm$ 0.002).[23] Our experimental value, 0.8 $\pm$ 0.3, is consistent with the interpretation of this transition as pure M1, but is not accurate enough for use in any quantitative way. The theoretical M1 conversion coefficient for a 312-kev transition in Z=92 is given as 0.79 by Rose[22] and as 0.72 by Sliv and Band[24].

8. CONVERSION COEFFICIENTS AND MULTIPOLE ASSIGNMENTS

In order to calculate conversion coefficients from the relative electron and gamma intensities the gamma intensities were normalized to the electron intensities by means of Rose's theoretical K-conversion coefficient for the 312-kev M1 transitions.[22] This normalization was chosen because the large limits of error on the experimental value of α_k^{312} made this value undesirable as a normalization factor although it does serve as a check against a gross error in the interpretation. If the 312-kev transition should have the 2% E2 admixture which we have set as an upper limit, then the use of the theoretical α_k^{312} for a pure M1 transition would introduce a 2% error in the normalization and in the calculated conversion coefficients.

The conversion coefficients so calculated are listed in Table IV. From the limits of error placed on the electron and gamma intensities, we estimate limits of error of about 35% for most of the experimental conversion coefficients listed in Table IV. The values for the weak transitions may be in error by as much as a factor of two.

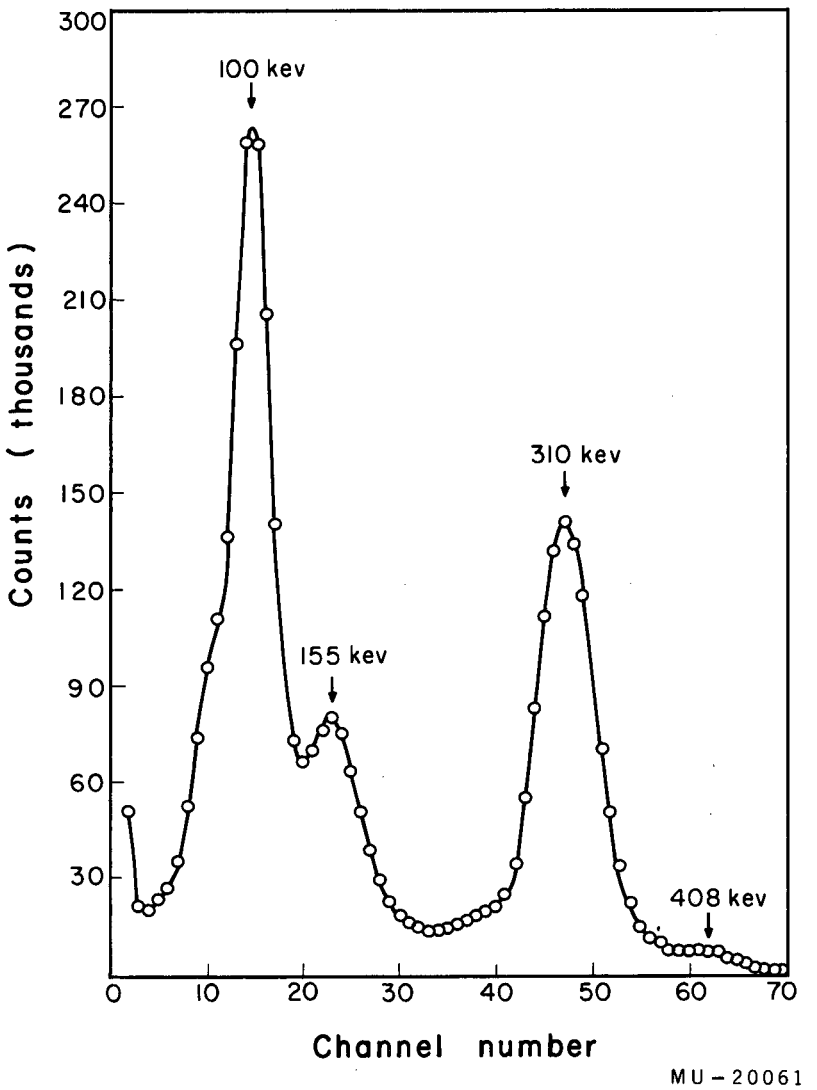

Fig. 2. Gamma-ray spectrum of Pa^{233}.

Table IV

Pa^{233} transition intensities and multipolarities

Transition energy (kev)	Transition intensity (% β decay)	M1-E2 mixing (% E2 photons)		
		Bisgård et al[a]	Albouy and Valadares[b]	This work
17.26	---	---	---	---
28.54	~ 19	M1 + E2	4% E2	(3 ± 0.5)% E2
40.35	12	M1 + E2	60% E2	(30± 10)% E2
75.28	14	M1	M1(< 1% E2)	(1 ± 0.1)% E2
86.59	17	M1	M1(< 1% E2)	(2 ± 0.5)% E2
103.86	4.8	M1	M1(< 1% E2)	(4 ± 1)% E2
271.62	0.5	E2	E3, E4, E5 or M1 + E2	~ 100% E2
300.20	13	M1	M1	(12± 10)% E2
311.91	68	M1	M1	M1(<2% E2)
340.51	7.0	M1	M1	10± 10% E2
375.35	0.7	E2	---	~ 100% E2
398.57	1.2	E2	---	~ 100% E2
415.87	1.7	M1	---	(82± 7)% E2

a. Reference 7.

b. Reference 6.

The experimental L-subshell ratios, $\alpha_K/\alpha_{\Sigma L_i}$ ratios,[25] and absolute conversion coefficients are compared with the theoretical values of Rose[22] in order to assign transition multipolarities. Rose's theoretical values for M1 and E2 transitions are listed in Table III along with the experimental values and the assigned multipolarities. In calculating the percentages of mixed multipoles, most weight has been given to the L-subshell ratio data.

Some general observations can be made about the data and assignments presented in Table III. In most cases the major multipole component of each transition is clearly indicated. Especially evident in the pure E2 assignments is the fact that the experimental absolute conversion coefficients are somewhat larger than the theoretical conversion coefficients. These differences are probably due to experimental errors in the electron- and photon-intensity data and to the means of normalizing the photon intensities to the electron intensities. Note that if the theoretical α_K[312] of Sliv had been used for normalization, all experimental values would be lowered by ~9%, but this difference would not be sufficient to bring our values into line. It would be desirable to determine these conversion coefficients with higher precision in order to check the absolute values of the conversion coefficients.

In table IV a comparison is given of the multipolarity assignments made by Bisgård et al.[7], by Albouy and Valadares[6], and in this study. Although the previous assignments have been largely qualitative, there is agreement with regard to the major component of all transitions except the 416 kev. Bisgård et al assign this transition as magnetic dipole, whereas we interpret it as an M1-E2 mixture, with 82 ± 7% E2. In the case of the 40-kev transition, Albouy and Valaderes report an M1-E2 mixture with approximately 40% M1, whereas our data indicate an approximately 70% M1 admixture.

9. ABSOLUTE TRANSITION INTENSITIES AND LOG FT VALUES

From the data of previous investigators,[2,4,14] it is apparent that approximately 95% of the beta decay populates the upper four levels in U^{233}. We have therefore attempted to make an absolute

estimate of the measured relative intensities in Table I, II, and III by assuming that the sum of the intensities of the transitions depopulating the upper four levels is equal to 95% of the total beta decay. The transition intensities (the sums of the electron and gamma-ray intensities) calculated under this assumption are listed in Table IV.

Since no gamma-ray data and only limited electron-intensity data are available for the 28-kev transition, its total intensity was estimated in the following manner: The multipolarity of the 28-kev transition was deduced from the relative M-subshell ratios by comparing the experimental values to Rose's theoretical values.[22] The transition was found to be M1 with approximately 3% E2 admixture. The total L-electron intensity was approximated as 3.6 times the total M electron intensity (average of the ratio of total L to total M intensities for other M1 transitions observed here) and the N and O electron intensities were estimated respectively as 1/3 and 1/9 of the M-electron intensity. This latter assumption was made also in estimating the total intensities of other transitions whose N and O intensities had not been measured. Because of the high conversion coefficients, the photon intensity of this transition is a very small fraction (~0.2%) of the total intensity.

The percent beta populations to the levels in U^{233} were deduced from the absolute transition intensities and are listed in Table V. Hok's measured intensity values for the low- and medium-energy beta components are 37% and 58%, respectively.[2] The corresponding values deduced from the values in Table V are 40% and 53%; thus the intensities of these beta-decay branches determined in two independent ways are equal within experimental error.

The value of 5% decay to the ground-state band listed in Table V is that measured by previous workers.[2,4,14] The log ft values in Table V were calculated from the curves of Moszkowski[26] by use of the beta intensities listed.

10. DISCUSSION OF DECAY SCHEME

The above data have been used to construct the decay scheme shown in Fig. 3. The general features of the scheme are the

Table V

Beta-component intensities and log ft values in the decay of Pa^{233}

Final state (kev)	Beta-group intensity (percent)	log ft
415.80	$\gtrsim$ 21	$\lesssim$ 6.7
398.55	$\lesssim$ 19	$\gtrsim$ 6.9
340.52	25	7.2
311.93	28	7.3
40.35, 0.00	~ 5	9.2

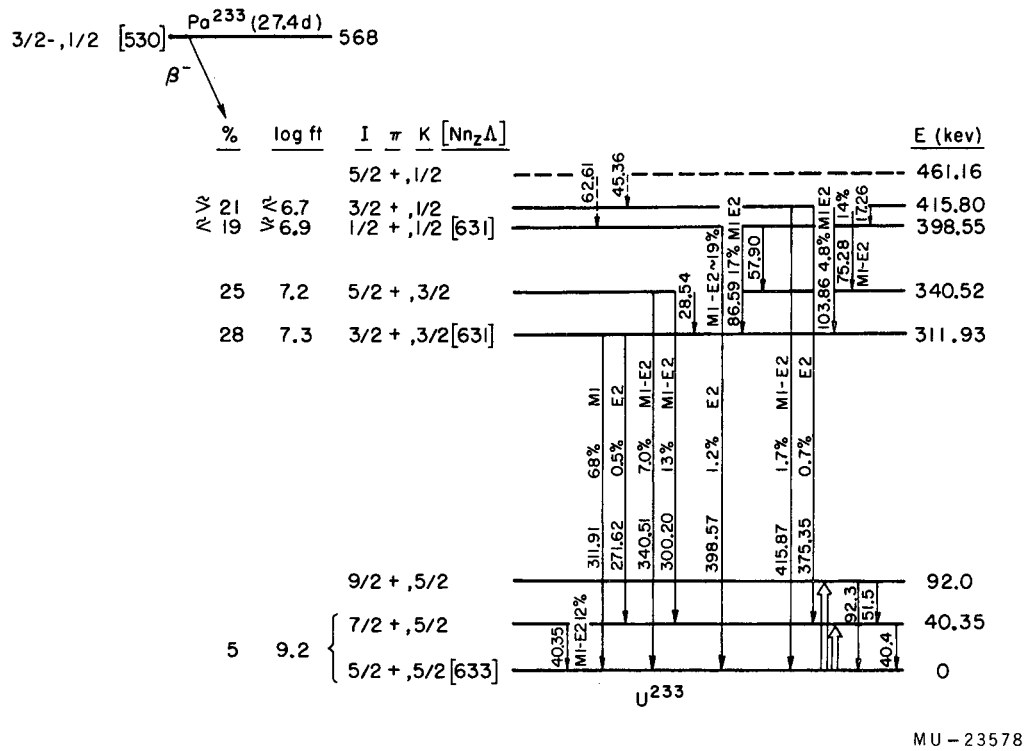

Fig. 3. The energy levels of U^{233} populated by the decay of Pa^{233}.

$$E_{rot} = \hbar^2/2\mathcal{J} \; [I(I+1) - I_o(I_o+1)].$$

The result is $\hbar^2/2\mathcal{J} = 5.76$ kev. With this constant the energy of the second excited state is calculated to be 92.22 kev. Newton's measured value is 92.0 kev.[5]

The recent results of Albouy and Valaderes[6] indicated a possible discrepancy in the Pa^{233} decay scheme: they reported that the total feeding of the 40-kev level is stronger than the measured intensity of the 40-kev transition by a factor of 3 or 4. We find, however, that the 40-kev transition is too weak by only 15%. The predominant decay to the 40-kev state occurs via the 300, 270, and 375-kev transitions (total intensity 14%) whereas our measured intensity of the 40-kev transition is 12%. This imbalance of ~ 15% is within the combined sources of error of the transitions involved, thus we feel that there is no inconsistency with the proposed scheme.

We have assigned the 40-kev transition as 70% M1 and 30% E2; Albouy and Valaderes[6] report this mixture as 40% M1 and 60% E2. In addition, these workers[6] have calculated a value of 20% M1 and 80% E2 based upon the data of Newton.[5] The mixing ratio of this transition is important because it can be used along with the experimental values of the magnetic and quadrupole moments to calculate the gyromagnetic ratios for the particle ($g\Omega$) and core (gR) for the ground state rotational band. The calculation is based on the fact that the reduced transition probability for collective M1 transitions is proportional to $(g\Omega - gR)^2$, and that of collective E2 transitions is proportional to Q_o^2,[8] where Q_o is the intrinsic quadrupole moment. Also, the magnetic moment is related to $g\Omega$ and gR by the equation[8]

$$\mu = \frac{I^2}{I+1} g\Omega + \frac{I}{I+1} gR \text{ for } I = K = \Omega \geq 3/2.$$

The values of $g\Omega$ and gR cannot be determined uniquely unless the signs as well as the values of Q_o and μ are known. Newton[5] discusses this calculation in more detail.

For U^{233} μ has been measured as $\pm$ 0.51 nuclear magnetons[36] and q, the measured quadrupole moment, is $\pm$ 3.4 barns.[36] From the latter we deduce a value of $\pm$ 9.5 barns for Q_o.[8] Using the

same as proposed by Brodie[4] and supported by Hok and Kramer.[2] The quantum assignments of the U^{233} levels suggested by Newton[5] are confirmed. Some Coulomb-excitation data of Newton are included in the scheme for completeness. The energies assigned the levels are a best fit to the sums and differences of the energies of the gamma rays connecting the levels. In all cases the difference in the possible energy values of a level as computed by different sums and differences is within 0.04%.

The ground-state spin of U^{233} has been measured as 5/2 by a number of investigators.[27-31] As pointed out by Newton,[5] the ground state is most probably the 5/2+ [633] Nilsson level. The ground state spin of Pa^{233} was measured as 3/2 by Hubbs and Winocur.[32] Evidence that the ground state of Pa^{233} has odd parity was obtained by a beta-gamma angular correlation experiment performed at Uppsala by Hamilton, Hollander, Pettersson, and Subba Rao.[33] An anisotropy observed between the 250-kev beta group and the 312-kev photon establishes that the beta transition to the 312-kev level cannot be purely allowed. Thus, the parity of Pa^{233} is odd if that of the 312-kev level is even. The Pa^{233} ground state has been interpreted[34] as the 3/2 member of a K = 1/2 band based on the Nilsson level 1/2 - [530]. With this basic information and the data at hand it is possible to analyze the scheme with respect to beta branchings, photon branchings, and log ft values. It will be convenient to discuss each of the rotational bands separately.

a. Ground-State Band

The assigned quantum states indicate that the beta transitions to the ground-state band proceed largely by the "unique" $\Delta I = 2$, yes, type of decay, since $\Delta I = 1$ transitions are K-forbidden ($\Delta K = 2$). In addition, the first-forbidden transition to the ground state is "hindered", in the notation of Alaga,[35] since a selection rule on the asymptotic quantum number Λ is violated. The experimental log ft of 9.2 for transitions to the ground - and first - excited states (unresolved) is consistent with "unique" 1st forbidden decy and hence with the assigned quantum states.[36]

The rotational constant ($\hbar^2/2\mathcal{J}$) for the ground-state band was calculated from the energy of the first excited state (40.35 kev) by means of the equation[8]

Table VI

The decay of Pa^{233} — experimental and theoretical relative reduced photon transition probabilities

E_γ/E_γ'	K_i/K_f	$\frac{L: B(I_i \to I_f)}{L: B(I_i \to I_f')}$	Theoretical values	Experimental values: Albouy and Valadares[a]	Experimental values: This work
75/103	1/2 3/2	$\frac{M1: B(3/2 \to 5/2)}{M1: B(3/2 \to 3/2)}$	1.5	1.3 → 1.7	3.2
416/375	1/2 5/2	$\frac{E2: B(3/2 \to 5/2)}{E2: B(3/2 \to 7/2)}$	1.3	> 2.4	1.3
300/340	3/2 5/2	$\frac{M1: B(5/2 \to 7/2)}{M1: B(5/2 \to 5/2)}$	2.5	1.3	2.3
300/340	5/2 5/2	$\frac{M1: B(5/2 \to 7/2)}{M1: B(5/2 \to 5/2)}$	0.4		
300/340	3/2 5/2	$\frac{E2: B(5/2 \to 7/2)}{E2: B(5/2 \to 5/2)}$	0.037	--	~3.6

a. These values were deduced from data presented in Reference 6.

mixing ratio of 70% M1 and 30% E2 for the 40-kev transition, and assuming that Ω_o and gR are both positive we calculate the following choices:

$$g\Omega = 0.157, \quad gR = 0.320$$

or

$$g\Omega = 0.250, \quad gR = 0.087$$

The second choice is not acceptable since gR is expected to have a value of approximately[8] + Z/A = 0.4.

The mixing ratio of 40% M1 and 60% E2 reported by the French[6] workers leads to values of

$$g\Omega = 0.228, \quad gR = 0.142$$

or

$$g\Omega = 0.178, \quad gR = 0.267$$

Newton[5] has previously reported calculated values of

$$g\Omega = 0.25, \quad gR = 0.17$$

or

$$g\Omega = 0.20, \quad gR = 0.28$$

In Newton's calculation, however, a value of Ω_o of ~14 barns was used.

b. K = 3/2 Band

The levels at 311 kev and 340 kev have been interpreted as the 3/2 and 5/2 members of rotational band based on the Nilsson level 3/2 + [631].[5]

The calculated log ft values listed in Table V for beta decay to these levels are consistent[37] with first-forbidden nonunique decay (ΔI = 0 or 1, yes) and hence support the assigned spins and parities. The experimental beta branching to these two levels is also in reasonably good agreement with the theoretical value predicted from vector-addition coefficients. The theoretical value for L = 1 decay is $\frac{B(3/2 \rightarrow 5/2)}{B(3/2 \rightarrow 3/2)} = 1.5$, and the experimental value (inverse ratio of ft values) is ~1.3. We here compare only L=1 beta decay because L = O decay to the 3/2 level is K forbidden.

It is possible to test the K-quantum assignment of the 340-kev level by a comparison of the relative reduced photon transition probabilities of both the M1 and E2 components of the 300- and 340-kev transitions with those predicted theoretically for states of definite K. The experimental and theoretical values are listed in Table VI. The theoretical values are as discussed above; the experimental ones were calculated

only other K value consistent with the measured spin for Pa^{233} is K = 3/2. If this value is assumed, it is possible to make branching-ratio comparisons for decay to the 416- and 399-kev levels because L = 0 transitions are then K-forbidden. With this assumption the theoretical ratio for L = 1 decay to the two highest levels is $\frac{B(3/2 \rightarrow 1/2)}{B(3/2 \rightarrow 3/2)} = 1.25$; the experimental value is 0.62, calculated by assuming the intensity of the 17-kev transition to be negligible. (The experimental ratio would be smaller if a finite value were assumed for the intensity of the 17-kev transition.) Thus, the theoretical and experimental values differ by at least a factor of two. This in itself is not conclusive evidence against an assignment of K = 3/2 for the ground state of Pa^{233} because such deviations can be caused by admixtures of K values in the initial or final states. However, additional evidence that the ground state of Pa^{233} has K = 1/2 comes from the work of Stephens, Asaro, and Perlman[38] on the alpha decay of Np^{237}, which populates several excited states in Pa^{233} whose spacings appear to be characteristic of a K = 1/2 band.

The theoretical and experimental values of the reduced photon branching ratio $\frac{416\text{-}E2}{375\text{-}E2}$ are compared in Table VI. The theoretical value and our experimental value are within experimental error. The data thus support the quantum assignment of (3/2+, 1/2) for the 416-kev level. Note that M1 transitions from the K = 1/2 band to the ground-state band are K-forbidden. This accounts for the predominantly E2 character of the 416-kev transition.

The theoretical and experimental reduced photon branching ratios $\frac{75\text{-}M1}{103\text{-}M1}$ also are compared in Table VI. Our experimental value is more than a factor of two larger than the theoretical value, a discrepancy outside the assigned limits of error. If the multipolarities of the gamma rays depopulating the 416-kev level have been correctly deduced, the only choice of spin for this level is 3/2; and thus the only possible K values are 1/2 and 3/2. The alternative choice of K = 3/2 leads to a theoretical value of $\frac{M1:\ B(3/2 \rightarrow 5/2)}{M1:\ B(3/2 \rightarrow 3/2)} = 0.67$, which differs from the experimental value by a factor of 4.8, in worse disagreement than the results for K = 1/2.

The difference between the experimental and theoretical

from the ratios of the measured gamma-ray relative intensities corrected for the $E^{2\ell+1}$ energy dependence and for multipole admixtures. Also listed are experimental values deduced from the data of Albouy and Valadares.[6]

A comparison of the experimental and theoretical ratios for the M1 radiation should best indicate the major K- component of the 340-kev level, since the amount of E2 mixing in the 300 and 340 kev transitions is small and inaccurately known. For the M1 components our experimental values agree well with the theoretical value for K = 3/2, and support the assignment of the 340 kev state as the first rotational member of the band based on the 3/2+ [631] intrinsic state. From the energy difference between 3/2+ and 5/2+ members of this band (28.59 kev) one calculates a rotational constant of 5.72 kev. The calculated energy of the 7/2+ member is, then, 380.6 kev. No evidence for a state of this energy was found in this work.

There appears to be a large discrepancy between our experimental and theoretical ratios for the weak E2 components of the 300 and 340 kev radiation. This disagreement may be due to the large errors in the experimental determination of the mixing ratios and perhaps in part is due to an admixture of K = 1/2 in the 340-kev level. Such an admixture would not affect the branching ratio of the M1 components since for K = 1/2 → K = 5/2 dipole radiation is K-forbidden.

c. K = 1/2 Band

According to the multipole assignments listed in Tables III and IV the levels at 398 and 416 kev must have spins and parities of 1/2+ and 3/2+, respectively. These assignments support the interpretation that these levels are the first two members of a K = 1/2 rotational band with the Nilsson level 1/2 + [631] as the base state.[5] The division of the primary beta population between these two levels cannot be estimated accurately because the intensity of the 17-kev transition is not known. In Table V the log ft values listed for these two levels were calculated with the assumption of an intensity of 0% for the 17-kev transition, and the uncertainties indicated by ($\leq$) and (>) signs. These approximate log ft values support the postulated spin and parity assignments.

The theoretical branching ratio for beta decay to these levels cannot be calculated from vector-addition coefficients without knowledge of the relative amounts of L = 0 and L = 1 types of decay to the 416-kev level; however, if the quantum assignments of the 399- and 416-kev levels are assumed to be correct it is possible to make an indirect test of the assignment K = 1/2 to the ground state of Pa^{233}. The

Table VII

Unassigned electron lines in the decay of Pa^{233}

Ee^- (kev)	Possible assignments
1.90	(a)
2.83	(a)
4.08	(a)
108.3	$130\text{-}L_I$
112.7	$130\text{-}L_{III}$
166.5	
172.4	(a)
226.6	
229.5	$250\text{-}L_{II}$
232.1	
232.3	
233.5	$250\text{-}L_{III}$
262.7	
281.1	
292.0	$314\text{-}L_I$
293.0	$314\text{-}L_{II}$
445.5	

Questionable lines: 6.84, 9.31, 9.44, 19.86, 20.25, 20.49, 21.30, 21.75, 22.08, 23.60, 23.84, 24.68, 25.70, 28.52, 30.64, 35.53, 37.77, 41.67, 47.59, 53.86, 54.16, 63.91, 65.15, 65.83, 67.23, 69.42, 72.21, 74.46, 81.73, 105.6, 217.7, 219.5, 221.5, 227.2, 396.7.

a. Much stronger than others listed in this table.

values may be due to admixtures in the initial or final states of K values differing from the principal one by ± 1. Approximate calculations show that although interaction between the observed K = 3/2 and K = 1/2 band is probably not large enough to explain the discrepancy, the Nilsson state 1/2 + [640] may mix with the K = 1/2 and/or K = 3/2 band to a degree large enough to affect the relative reduced transition probabilities appreciably. Thus, the evidence indicates that the major component of the 399- and 416-kev states is K = 1/2.

11. OTHER TRANSITIONS AND NEW STATES

There is weak evidence that transitions from the previously unobserved 5/2 member of the K = 1/2 band were seen in this study. These transitions, of 62.61 and 45.36 kev, are shown in Fig. 3 depopulating a level at 461.16 kev. The evidence for these transitions is two weak electron lines of energies 41.67 and 23.60 kev listed in Table VII. It was assumed that the first of these lines is the L_{II} line of a 63-kev E2 transition, and that the second is the L_I line of a 45-kev M1-E2 transition. The fact that no other electron lines of these transitions were observed is consistent with the very weak intensities of the observed lines and the multipole assignments of the transitions. This evidence is tenuous, since in the energy region of these lines there are many unassigned lines among which one might expect some coincidental agreement. Some support is given the postulate by the very close agreement between the differences of the postulated transitions (17.25 kev) and the measured energy (17.26) of the $3/2+ \rightarrow 1/2+$ transition.

With the assignment of the 5/2 member, it is possible to calculate the rotational constant $\hbar^2/2\mathcal{J}$ and the decoupling parameter "a" for this K = 1/2 band. These constants are defined by the equation[8]

$$E_{rot} = \hbar^2/2\mathcal{J}\,[I(I+1) + a(-)^{I+1/2}(I+1/2)].$$

Substitution of the measured energies gives $\hbar^2/2\mathcal{J}$ = 7.41 kev and a = - 0.22.

These values may be compared with those of the same rotational band occuring in other nuclei. In U^{235} the 1/2 + [631] level is a low-lying isomeric state. Albridge and Hollander,[39] using permanent-

been visible had they been present in the intensities reported by the Danish workers.

It is of interest to discuss the 42- and 145-kev photons seen in the bent-crystal spectrometer. Fairly large error limits have been placed on the measured energies of these photons (Table II) because in the spectrum the lines were not well defined. The 41.65-kev gamma was observed only with the platinum wire source because the line was of too low intensity to be seen with the weaker ThO_2 source. The 145-kev line was observed only with the ThO_2 source because this region of the energy spectrum was not scanned with the platinum wire source. In Table VII there is no definite evidence of conversion electrons corresponding to transitions of 42 or 145 kev. One extremely weak line, seen at an energy of 19.86 kev, could be the L_I line of a 41.62-kev transition, but this line is of doubtful existence. The fact that there is no definite evidence of conversion electrons of these two transitions raises the question whether the recorded gamma rays have arisen from impurities in the particular sources used for gamma spectroscopy. The source with which the 41-kev gamma was detected underwent the same chemistry as used for the permanent-magnet spectrograph sources; and although the source used for the detection of the 145-kev gamma underwent no chemistry, it is likely that very few fission products were formed, owing to the low thermal-neutron fission cross section of Th^{232}. Besides, no gamma ray of 145 kev has been reported as being associated with a fission product. Thus we may tentatively consider these photons to arise in Pa^{233} decay. The most probable reason for the failure to observe conversion electrons from these transitions is that they have small conversion coefficients. For example, if the transitions were electric dipole the conversion-electron intensities would have been too small to be detected.

The difference between the energies of the 42- and 145-kev photons is 103.77 ± 0.05 kev. This difference agrees with the energy of the 103.86 ± 0.02-kev transition to within 0.1% Although this deviation is not within the assigned limits of errors, possibly the error limits have been underestimated. With the assumption that this energy

magnet spectrographs, have determined the energies of the 3/2+ and 5/2+ members of this band in U^{235} by measuring the 5/2 →1/2+ and 5/2+ →3/2+ transition energies from the alpha decay of Pu^{239}. The energies of the 5/2+ and 3/2+ levels were found to be 51.67 kev and 13.00 kev, respectively. These energies lead to values of $\hbar^2/2\mathcal{J}$ = 6.04 kev and a = - 0.28. The 1/2+ [631] level is also the ground state of Pu^{239}. In studies of the decay of Np^{239} Hollander et al.[40,41] and Ewan et al.[42] determined values of $\hbar^2/2\mathcal{J}$ and a for the K = 1/2 band in Pu^{239} as 6.28 kev and - 0.58, respectively.

In Table I are listed two lines assigned as the L_{II} and L_{III} lines of a 57.90-kev E2 transition. In Fig. 3 this transition is placed between the 399- and 341-kev levels. The 57.9-kev L lines assigned in this work were too weak to be given a numerical intensity. This weakness, in addition to the fact that the transition is thought to be E2 and, therefore, highly converted, is consistent with the fact that Browne[16] failed to detect the gamma ray of this transition. That a 58-kev photon was not detected with the Pasadena spectrometer may not be significant since it is possible that during the sweep of this energy region the discriminator of the detector was not properly adjusted. This fact was not discovered until the source had been returned from Pasadena to Berkeley.

There is evidence for the existence of other gamma transitions in the Pa^{233} decay. This evidence is a number of unassigned electron lines (Table VII) detected with the permament-magnet spectrographs and two photon lines (Table II) of energies 41.65 and 145.42 kev detected with the Pasadena bent-crystal spectrometer. The electron lines listed in Table VII are divided into two groups. In the first group are lines whose existence is considered relatively certain because of their intensities or because of their detection on more than one photographic plate. The second group contains lines whose existence is questionable or doubtful.

Bisgård et al.[7] have reported weak electron lines of energies approximately 5 kev less than those of the 300-, 312-, and 341-kev K lines (i.e., at ~180, ~185, and ~220 kev). With the exception of a questionable line at approximately 220 kev, lines of these energies were not observed in this work, although they would most likely have

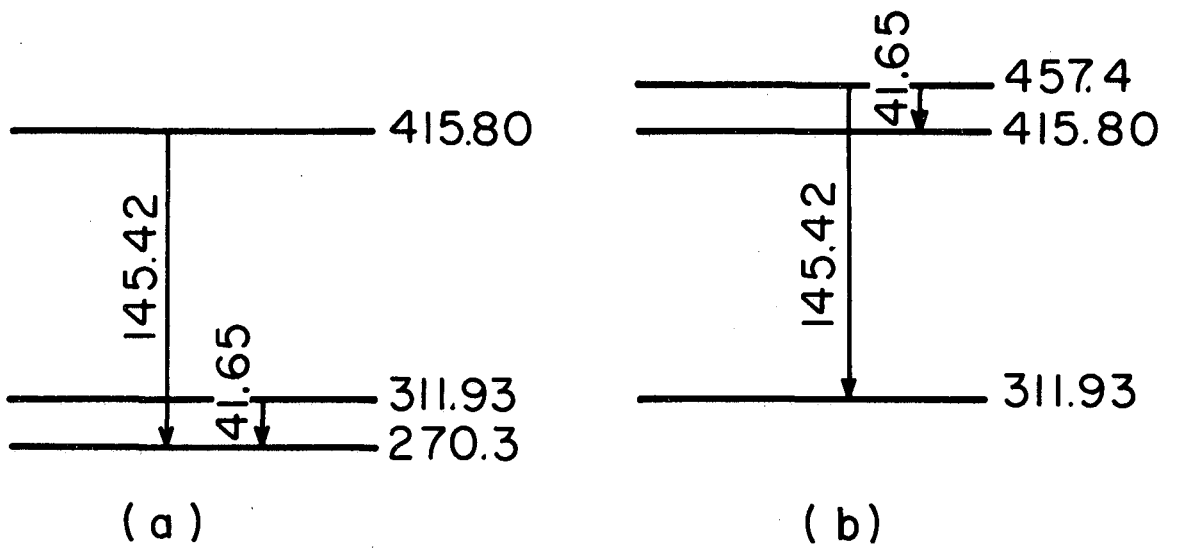

MU-20058

Fig. 4. (a and b) Possible assignments of two new transitions in the decay of Pa^{233}.

difference is significant, the two new photons can be used to define a level at either 270.3 kev or 457.4 kev, as shown in Fig. 4. Thomas et al.[43] have reported a level in U^{233} of approximately 290 ± 28-kev populated by the alpha decay of Pu^{237}, and this may possibly be identified with our 270.3 kev alternative.

Stephens et al.[34] and Mottelson and Nilsson[1] have discussed the possible Nilsson assignments of the ~290 kev level. The former workers favor the assignment 5/2 - [752], the latter, 7/2 - [743]. Of the two possibilities, our data allow only the 5/2 - [ ] assignment to be made to the new state, regardless of its energy. The 7/2 - assignment would demand that the 42- and 145-kev transitions be M2, which would be inconsistent with our failure to see conversion lines. On the other hand, with the 5/2 - assignment the transitions would be electric dipoles with small conversion coefficients. (The 145-kev transition would, however, be K-forbidden.) Because of its high resolution, the bent-crystal spectrometer was not used to sweep the entire energy spectrum; thus it is not known whether photons associated with this level other than the two reported here are observable. The existence of a 270.3-kev state would of course pose the additional demand that there be an E1 transition to ground. It would be of value to search for the 270.3-kev photon, which would have to be at least as intense as the 145-kev photon (0.44%), with which it would be in coincidence.

12. AUGER TRANSITIONS

An investigation of the K- and L-Auger spectrum of uranium, which results from the decay of Pa^{233}, was also made. The results are discussed in a following paper.[44]

ACKNOWLEDGMENTS

We are indebted to Prof. J. O. Rasmussen, Dr. S. G. Nilsson, and Dr. R. Stockendal for helpful discussions. We are also grateful to Prof. J. W. M. Du Mond for his kind cooperation in making the bent-crystal spectrometer available to us for the present study.

23. F.K. McGowan and E. C. Campbell, Phys. Rev. 92, 523 (1953).
24. L.A. Sliv and I.M. Band, Internal Conversion Coefficients of Gamma Rays - Part I, K-Shell (issued in U.S.A. as University of Illimois Report 57IccKl).
25. ΣL_i refers to the sum of the measured L-subshell intensities. It differs from the total L intensity when one or more of the subshells were not measured.
26. S.A. Moszkowski, Phys. Rev. 82, 35 (1951).
27. K.L. Vander Sluis and J.R. McNally, Jr., J. Opt. Soc. Am. 45, 65 (1955).
28. K.L. Vander Sluis and P.M. Griffin, J. Opt. Soc. Am. 45, 1087 (1955).
29. N.I. Kaliteevskii and M.P. Chaika, Doklady Akad, Nauk S.S.S.R. 103, 49 (1955); Optika i Spectroskopiya 1, 809 (1956).
30. L.A. Korostyleva, A.R. Stringanov, and N.M. Yashin, Zhur. Eksptl. i Teoret. Fiz. 28, 471 (1955); [translation: Soviet Phys. JETP 1, 310 (1955)] ; Izvest. Akad. Nauk S.S.S.R. Ser. Fiz. 19, 31 (1955).
31. A.G. Zimin and N.M. Yashin, Doklady Akad. Nauk. S.S.S.R. 109, 283 (1956);[translation: Soviet Phys. Doklady 1, 419 (1957)].
32. J.C. Hubbs and J. Winocur, Bull. Am. Phys. Soc. II, 3, 319 (1958).
33. Hamilton, Hollander, Pettersson, and Subba Rao, unpublished results (1959).
34. Stephens, Asaro, and Perlman, Phys. Rev. 113, 212 (1959).
35. G. Alaga, Phys. Rev. 100, 432 (1955); Nuclear Phys. 4, 625 (1957).
36. P.B. Dorain, C.A. Hutchinson, Jr., and E. Wong, Phys. Rev. 105, 1307 (1957).
37. R.W. King and D.C. Peaslee, Phys. Rev. 94, 1284 (1954).
38. Stephens, Asaro, and Perlman, unpublished data (1957).
39. Albridge and Hollander, unpublished data (1956).
40. Hollander, Smith, and Mihelich, Phys. Rev. 102, 740 (1956).
41. J.M. Hollander, Phys. Rev. 105, 1518 (1957).
42. Ewan, Geiger, Graham, and MacKenzie, Phys. Rev. 116, 950 (1959).
43. Thomas, Vandenbosch, Glass, and Seaborg, Phys. Rev. 106, 1228 (1957).
44. R.G. Albridge and J.M. Hollander, Nuc. Phys., following paper.

REFERENCES

1. B.R. Mottelson and S.G. Nilsson, Mat. Fys. Skr. Dan. Vid. Selsk. 1, No. 8 (1959).
2. Ong Ping Hok and G.J. Sizoo, Physica 20, 77 (1954); Ong Ping Hok and P. Kramer, Physica 21, 676 (1955).
3. H.B. Keller and J.M. Cork, Phys. Rev. 79, 1030 (1950).
4. W.A. Brodie, Proc. Phys. Soc. 67A, 397 (1954).
5. J.O. Newton, Nuclear Phys. 5, 218 (1958).
6. G. Albouy and M. Valadares, J. Phys. Radium 20, 816 (1959); Comp. Rend. 250, 2877 (1960).
7. Bisgård, Dahl, and Olesen, Nuclear Phys. 12, 612 (1959).
8. A. Bohr and B.R. Mottelson, Kgl. Danske Videnskab. Selskab., Mat. Fys. Medd. 27, No. 16 (ed 2, 1957); Beta and Gamma Ray Spectroscopy, edited by K. Siegbahn (Interscience Publishers, Inc., New York, 1955), Chapter 17, p. 468.
9. M. Mladjenović and H. Slätis, Arkiv. Fysik 8, 65 (1954).
10. R.G. Albridge, Jr., UCRL-8642 (Thesis), (1960).
11. K. Siegbahn and K. Edvarson, Nuclear Phys. 1, 137 (1956).
12. J.W.M. Du Mond, in Beta and Gamma Ray Spectroscopy edited by K. Siegbahn (Interscience Publishers, Inc., New York, 1955), Chapter 4, p. 100.
13. Hill, Church, and Mihelich, Revs. Sci. Instr. 23, 523 (1952).
14. L.G. Elliott and A.B. Underhill, Harwell Report, HAR 761 (1952).
15. D. Saxon, Phys. Rev. 81, 639 (1951).
16. C.I. Browne, Jr., UCRL-1764 (Thesis), (1952).
17. The "accepted" X-ray energies were deduced from electron binding energies listed in Wapstra, Nijgh, and van Lieshout, Nuclear Spectroscopic Tables, North-Holland Pub. Co., Amsterdam, (1959).
18. O. Beckman, Arkiv. Fysik 9, 495 (1955).
19. R.L. Heath, Scintillation Spectrometry Gamma-Ray Catalogue, AEC report IDO-16408 (July, 1957).
20. G.W. Grodstein, X-ray Attenuation Coefficients from 10-kev to 100-Mev; National Bureau of Standards Research Paper No. 583.
21. Lind, West, and Du Mond, Phys. Rev. 77, 475 (1950).
22. M.E. Rose, Internal Conversion Coefficients, North-Holland Publishing Co., Amsterdam (1958).

This report was prepared as an account of Government sponsored work. Neither the United States, nor the Commission, nor any person acting on behalf of the Commission:

A. Makes any warranty or representation, expressed or implied, with respect to the accuracy, completeness, or usefulness of the information contained in this report, or that the use of any information, apparatus, method, or process disclosed in this report may not infringe privately owned rights; or

B. Assumes any liabilities with respect to the use of, or for damages resulting from the use of any information, apparatus, method, or process disclosed in this report.

As used in the above, "person acting on behalf of the Commission" includes any employee or contractor of the Commission, or employee of such contractor, to the extent that such employee or contractor of the Commission, or employee of such contractor prepares, disseminates, or provides access to, any information pursuant to his employment or contract with the Commission, or his employment with such contractor.