UCRL-9506

cy 2

University of California

Ernest O. Lawrence Radiation Laboratory

TWO-WEEK LOAN COPY

This is a Library Circulating Copy which may be borrowed for two weeks. For a personal retention copy, call Tech. Info. Division, Ext. 6782

Berkeley, California

9506 cy 2

DISCLAIMER

This document was prepared as an account of work sponsored by the United States Government. While this document is believed to contain correct information, neither the United States Government nor any agency thereof, nor the Regents of the University of California, nor any of their employees, makes any warranty, express or implied, or assumes any legal responsibility for the accuracy, completeness, or usefulness of any information, apparatus, product, or process disclosed, or represents that its use would not infringe privately owned rights. Reference herein to any specific commercial product, process, or service by its trade name, trademark, manufacturer, or otherwise, does not necessarily constitute or imply its endorsement, recommendation, or favoring by the United States Government or any agency thereof, or the Regents of the University of California. The views and opinions of authors expressed herein do not necessarily state or reflect those of the United States Government or any agency thereof or the Regents of the University of California.

UCRL-9506

UNIVERSITY OF CALIFORNIA
Lawrence Radiation Laboratory
Berkeley, California

Contract No. W-7405-eng-48

GLASS CATHODES IN VACUUM-INSULATED HIGH-VOLTAGE SYSTEMS

Joseph J. Murray

September 12, 1960

UCRL-9506

GLASS CATHODES IN VACUUM-INSULATED HIGH-VOLTAGE SYSTEMS

Joseph J. Murray

Lawrence Radiation Laboratory
University of California
Berkeley, California

September 12, 1960

In the electromagnetic particle separators, which have been used now for some time, one finds remarkably small electric fields. A field strength of 60 kv/cm with plate separation of a few inches is typical. In terms of the angle through which it deflects a very relativistic particle such a field is equivalent to a magnetic field of only 200 gauss. Thus even at modest beam momenta, at which the relative deflection of different mass components of a beam may be 10 or 20% of the total deflection, the effective separating field is only of the order of tens of gauss. On the other hand, the electric fields that can be sustained in good dielectrics and in vacuum with very small gap lengths are of the order of several million volts per cm, and in the absence of any obvious fundamental limitations one might hope ultimately to attain similar field strengths in particle separators.

A small step toward the attainment of higher electric fields has been made recently through the use of glass cathodes in vacuum-insulated high-voltage systems, with the glass heated so as to lower its resistivity and cause it to behave like a conductor in the static realm. But first, before a description of results, a bit about the motivation for using glass cathodes at all.

The motivating idea was that a limiting class of vacuum sparks might involve in their incipient stage the emission of electrons from very small areas of the surface of the cathode at the eventual spark site, and that if the bulk resistivity of the cathode were high enough the degenerative effect of the local voltage drop at the emitting site would stave off or prevent an instability, whatever its nature might be, which would otherwise cause a spark. Such a notion might appear to be inconsistent with the well-known fact that the maximum electric field that can be sustained in all-metal systems is nearly proportional to the inverse square root of gap length. There is not necessarily any inconsistency, however, since this hypothetical incipient property of a spark--that it involve emission of electrons from the cathode--does not uniquely determine the ultimate nature of the spark. By way of illustration one might imagine two subclasses of sparks, one in which the final eruption resulted from cathode vaporization and another in which the ultimate source of instability was anode vaporization. The former would clearly depend only on local conditions at the emitting site, whereas the latter would depend on gap length as well. Both classes of sparks should, however, be suppressed by the action of a highly resistive cathode.

Now in order for a highly resistive cathode to behave as imagined here, certain physical conditions must be fulfilled, and these limit the selection of suitable materials. One consideration is the time constant for approach to equilibrium charge distribution on the cathode surface. For an isolated smooth surface this time constant, τ, is given by the product of bulk resistivity, ρ, and capacitivity, ϵ, when inductive effects and more complex relaxation phenomena are ignored. In order to realize conductor-like behavior in a static sense an

upper limit for τ of the order of a millisecond would appear to be reasonable in separator applications. Thus the first condition is

(1) $\tau \approx \rho \epsilon \lesssim 10^{-3}$ sec.

If there is to be any effective quenching of cold emission, the backward field, E, induced on the vacuum side of the cathode surface at the emitting site must be comparable to the field strength required to cause appreciable cold emission, or in order of magnitude, say 10^7 v/cm. A second condition, then, is

(2) $E \approx \epsilon/\epsilon_0 \; i\rho \gtrsim 10^7$ v/cm,

where i is the emission current density and ϵ_0 is the capacitivity of vacuum (8.85×10^{-14} sec Ω^{-1} cm^{-1}).

Finally, one must require as a third condition,

(3) stability of the following types:

(a) thermal--no cathode vaporization,

(b) dielectric--no breakdown with internal electric fields of the order $E(\epsilon/\epsilon_0)^{-1}$,

(c) mechanical--no rupture for stresses of the order $E^2/8\pi$, and

(d) dynamic,

where "dynamic stability" implies stability in temporal sense, as determined by the dynamical relationship among the various parameters of the system in the absence of more or less violent and discontinuous instabilities of the former types. The system involved here is so complex that one can do little more analytically than recognize the need for dynamic stability, and condition (3d) therefore cannot very well influence the choice of material. Furthermore, although its fulfillment is important, condition (3c) would not be expected to impose severe restrictions on the choice of material, since the stress associated with a field of 10^7 v/cm is only about 600 psi. Condition (3b), however, suggests the choice of a material with high dielectric strength and high capacitivity. In addition, condition (3a) together with condition (2) can be used to estimate roughly a lower limit for ρ as follows.

Given a critical temperature, T_c (certainly less than the melting temperature of the cathode material), and assuming that ohmic losses are dissipated solely by thermal conductivity, one can easily demonstrate with the aid of simplifying models or dimensional analysis that the relationship between E and the other parameters of the system is dominated by the term

$$E^2 \sim C \; k\Delta T \, \rho \, (\epsilon/\epsilon_0)^2 \, r^{-2},$$

where $\Delta T = T_c - T_{ambient}$ is the temperature rise at the emitting site, on the cathode surface, r is the "radius" of the site, and k is thermal conductivity. C is a numerical factor of order unity which depends on the geometrical details of the site. Setting C equal to unity and using condition (2), $E \gtrsim 10^7$ v/cm, one gets an order-of-magnitude estimate of a lower limit for ρ,

$$\rho \gtrsim 10^{14} r^2/k\Delta T(\epsilon/\epsilon_0)^2$$

in ohm-cm, for r in cm and $k\Delta T$ in watt cm^{-1}.

There is experimental evidence[1] suggesting that the effective r for tungsten is of the order 10^{-5} to 10^{-6} cm, and for present purposes this will be assumed to be generally true. For metals and semiconductors with $T_c \approx T_{melting}$, $k\Delta T$ varies between 10^2 and 10^3 watts/cm, so that using 10 as a representative value for ϵ/ϵ_0 one finds the condition for metals and semiconductors

$$\rho \gtrsim 10^{-3} \text{ to } 10\ \Omega\ \text{cm},$$

an unattainable range of resistivity for metals and possible but marginal for semiconductors; that is, these materials would likely melt before an appreciable back field, E, developed.

For glasses, on the other hand, with $T_c = T_{annealing}$, the value of $k\Delta T$ is about 2 watts/cm, so that with ϵ/ϵ_0 again set equal to 10 one finds

$$\rho \gtrsim 1 \text{ to } 10^2 \text{ ohm-cm},$$

a lower limit of resistivity always exceeded by a wide margin in glasses but at that same time much less than the upper limit, $\rho \gtrsim 10^{-3}/\epsilon = 10^{10}$ ohm-cm set by condition (1), thus leaving a wide acceptable range of values of ρ which can be attained in glass by heating. In Fig. 1 nominal values of volume resistivity as a function of temperature for soda-lime glass, pyrex, and fused quartz are indicated. Condition (3b) is also satisfied by these glasses even though their capacitivities are not especially high, ranging from 3.5 for fused quartz to about 10 for soda-lime glass, since the intrinsic dielectric strength for each is so very high, about 5×10^6 v/cm. These considerations, together with practical factors having to do with availability and fabrication, motivated the choice of hot glass for testing as a cathode material.[4]

The resistivity and dielectric constant of glass actually tested was deduced from measurements of the complex impedance of the test system (described later) as a function of frequency and temperature. An electrical network with a configuration selected to represent known or suspected properties of the system was adjusted experimentally to best simulate the impedance function of the system. The simplest network found to give a satisfactory representation of the glass itself in the frequency range 10 cps to 50×10^3 cps, for soda-lime glass (Corning type 0080), is shown in Fig. 2, where the lumped circuit elements are labeled with the corresponding specific parameters associated with the glass. Measured values of the four parameters at temperatures of 140°, 160°, and 200°C are also shown in Fig. 2.

As expected, the values found for ρ_{dc} and ϵ_∞ were essentially in agreement with handbook values if ϵ_∞ is taken to be the optical or high-frequency capacitivity and ρ_{dc} the dc conductivity. These elements represent qualitatively the dominant low-frequency properties of the glass. The additional series elements represent a lossy polarizability which amounts to nearly half the total effective polarizability of the glass at frequencies that are low compared with the relatively long relaxation time, $\rho_{pc}\,\epsilon_{lo}$ ($\approx 10^{-5}$ sec at T = 200°C). Inclusion of this element as the simplest reasonable refinement of the basic ρ_{dc}, ϵ_∞ approximation was necessary in order to simulate the data within experimental accuracy. It should be interpreted, however, only as a phenomenological approximation to probably much more complicated processes actually present. ρ_{dc} and ϵ_∞, on the other hand, should be interpretable in a true physical sense, ρ_{dc} corresponding to a dc conductivity due to slightly mobile cations (mainly Na ions in soda-lime glass), and ϵ_∞ corresponding to the polarizability of the lattice.

For proper evaluation of the experimental results of the glass cathode tests, some reference to the normal behavior of all-metal systems is needed. In this connection it is helpful to refer to the results of Trump and Van de Graaff.[2]

Using a system with stainless steel electrodes, they covered a wider range of gap lengths than has been covered in any other single experiment. By and large their results represent about the best that can be expected under any conditions in metal systems. The line labeled "Trump and Van de Graaff" in Fig. 3, in which field strength is plotted vs gap length, conforms closely to points representing their actual results. Note the near inverse-square-root relationship between field strength and gap length. Another useful reference, also drawn on Fig. 3, is the "no spark" limit of Kilpatrick,[3] an empirical fit to many experimental results, which represents a good estimate of operating conditions under which little if any sparking should occur.

Neither of these limits is really very well defined and in practice may not be easily recognized. They may be related conveniently to the actual performance of high-voltage systems by means of the following type of measurement. Repeatedly raise the potential until the system discharges, noting each time the potential at which the discharge occurs. The result obtained in this way can be represented as a distribution of spark potentials, and will be well defined if the system is allowed to operate long enough so that an equilibrium is reached at which successive measurements of the spark potential distribution give the same result. The shape of the distribution will be affected by the details of the system, especially by the amount of stored energy available to the spark. In the experience of the writer the maximum potential in the spark potential distribution usually lies near the Trump and Van de Graaff line. It is a condition attainable only in a statistical sense and is therefore not a practical operating condition. Kilpatrick's limit, on the other hand, falls well out on the low-voltage tail of the distribution, and at small gap lengths practical spark rates can usually be realized well above the "no spark" limit.

Figure 4 shows equilibrium spark potential distributions obtained in the foregoing manner for stainless steel electrodes of two different geometries and in the sphere-sphere case for two values of stored energy. The high-voltage and vacuum apparatus employed in these tests was the same as that used in the glass cathode tests described hereafter. Electrode surfaces were polished with 600-grade emery, washed with detergent, and flushed with acetone.

Small-Gap Low-Voltage Experiments

The first experiments with glass cathodes were performed at small gap lengths with a maximum supply voltage of 100 kv. Conventional vacuum apparatus was used--rubber gasketed, and continuously pumped by a mercury diffusion pump and a liquid nitrogen trap. After about a day with no heat or high voltage applied the system would reach a base pressure of about 3×10^{-7} mm Hg. The 100 kv was obtained from a small Cockcroft-Walton type supply with 300 megohms series resistance, a minimum capacity of 300 pf on the load side, and provision for increasing the capacity to 3000 pf. There is no evidence that the results obtained with glass cathodes depend at all on the stored energy available with this range of storage capacity. Most of the results to be described were actually obtained at the minimum capacity.

For convenience the test apparatus was mounted in a large glass cross. An oven with anode and cathode inside and mechanically integral with it was mounted on a pedestal connected to a cover plate which fitted over one opening of the glass cross as sketched in Fig. 5. In Fig. 6 is another sketch showing a cross section of the oven and the electrode assembly inside. Replaceable flat or hemispherical stainless steel anodes were screwed onto a hollow stainless tube connected rigidly to a flat disc-shaped zircon insulator which was clamped in the top of the oven. The anode supporting tube projected through the insulator to provide a semiflexible vacuumtight connection to the hv lead-in bushing.

Thermocouple leads connected directly to the anode were brought out through the hollow anode supporting tube, through the hollow lead-in bushing and coaxial transmission line to a meter at the hv supply. Oven temperature was limited to about 300°C because of chronic failure of the zircon insulator at temperatures above 300°C, at which zircon becomes fairly conductive.

The cathode assembly was at ground potential. A platform to which the glass samples were fastened was mounted on a threaded post which passed through and was keyed to a bearing mounted in the center of a circular semi-flexible inconel diaphragm. The diaphragm was connected around its periphery to the oven and thus almost directly to the anode support, thereby minimizing the chance for spurious gap-length fluctuations. A nut bearing against the diaphragm and engaging the threaded post could be manipulated by a shaft extending outside the vacuum through a gland in a bellows mounted on the cover plate, and allowed adjustment of the position of the cathode platform with respect to the diaphragm. Thus the gap between the cathode and anode could be changed under vacuum. At the same time motion of the cathode assembly in proportion to the electric force acting on the cathode surface was allowed by the semiflexible diaphragm and bellows, and could be accurately sensed externally as an axial motion of the nut shaft. The typical maximum motion of the cathode encountered was 3 to 4×10^{-3} in., and measurements of the motion were accurate to about 5×10^{-5} in.

Actual cathodes consisted of discs of plate glass 3 in. in diameter with various thicknesses up to 1/2 in. The minimum practical thickness is that which will permit the glass to successfully withstand the entire supply voltage, which will very likely be impressed across it transiently whenever a spark occurs. For a supply potential of 100 kv the minimum thickness seemed to be about 1/8 in. Plate glass samples with stock surface finish were selected for testing according to the criterion that they should have no surface blemishes obvious by inspection with the unaided eye. They were prepared simply by wiping with lens paper and acetone. A clamping ring bearing on the periphery of a disc held it to the cathode platform. Large-area electrical contact was made by coating the back sides of the glass discs with evaporated aluminum or brushed-on or baked-on silver paint. It was never established experimentally, however, that such large-area contact is preferable or needed in addition to normal unaided contact at clamping points.

An opening in the side of the oven permitted visual observation of the cathode-anode gap and allowed precise optical measurements of gap length to be made with a telescopic cathetometer.

A thermocouple connected to the cathode platform was assumed to indicate glass temperature if at the same time the anode was at essentially the same temperature. Several hours was usually required for the oven and its contents to outgas thoroughly and to reach thermal equilibrium.

In view of the considerable conductivity of the glass it would not be expected that any static charge would accumulate on its surface, so that in the absence of current flow and after a time lapse much greater than $\rho\epsilon$ the entire dc potential of the system should appear across the vacuum gap. Nevertheless an effort was made to establish directly that the electric field on the surface of the glass expected on the basis of the voltage-gap-length relationship is actually attained. This was done by comparing gap length measured optically with effective gap length deduced from measurements of applied potential and the corresponding force acting on the cathode.

A hemispherical anode was used to facilitate optical gap-length measurements. With the system evacuated and at operating temperature the apparent gap length between the anode and its image in the flat glass cathode surface was measured to an accuracy of less than 10^{-3} in. with a telescopic cathetometer set up with its optical axis at a grazing angle with respect to the cathode surface.

In this geometry the force, potential, and gap length are not very simply related. For a sphere of radius a with its center a distance d from a plane at a potential difference V, the electric force is given by

$$F = 2\pi \epsilon V^2 \sum_{n=1}^{\infty} \left[\operatorname{csch} n\alpha (\coth\alpha - n \coth n\alpha) \right],$$

where $\cosh \alpha = d/a$. The series is not very rapidly convergent for small values of α as encountered in this case. Comparison with machine summations carried out to 200 terms shows that for $\alpha < 0.3$ the series is approximated to better than 1% by the simple expression $(1.08\ \alpha^2)^{-1}$, which, together with a first-order small angle approximation for $\cosh\alpha$, gives the approximate expression for gap length $g = d - a$

$$g/a \approx \frac{\pi \epsilon V^2}{1.08\ F} \qquad \text{(mks rationalized units)},$$

accurate to better than 1% for $g/a < 0.05$. The force F was inferred from measurements of the deflection of the calibrated spring mount of the cathode assembly already described, and V was measured in a straightforward manner to an accuracy of about 1%.

In Fig. 7 are results showing the ration of the optical and electromechanical gap-length measurements as a function of voltage obtained for a 1/4-in.-thick soda-lime glass cathode operating at about 150°C with a 2-in.-diameter type 303 stainless steel anode and a nominal no-field gap length of 0.025 in. The uncertainty becomes large at low voltage mainly because of uncertainty in the measurement of cathode deflection. Since no appreciable currents were involved (see also Fig. 7), the agreement between the optical and electromechanical gap-length measurements within stated errors, especially at high voltages, leads to the conclusion that within an uncertainty of 2 or 3% the expected electric field was attained on the surface of the glass cathode.

Several samples of each of two types of glass were tested to determine the field-holding capabilities of glass cathodes. One type was soda-lime or soft glass similar to Corning type 0080. The other was a borosilicate similar to Corning Pyrex brand type 7740. Presumably in the application here as a cathode material, the most significant difference between these glasses is that at the same temperature soft glass has a resistivity about two orders of magnitude lower than that of Pyrex, a relationship to be expected because of the higher sodium content of soft glass.[4] Above 50°C and 100°C respectively no differences in performance of soft glass and Pyrex were noted, and no temperature dependence in the performance of either was observed up to the maximum available temperature, about 300°C.

Immediately after a fresh sample of glass was installed its surface would invariably be dusty. Upon first application of voltage, sparks would usually start at a very low voltage (whatever the gap length might be), and as the voltage was raised, accompanied by repeated sparking, all visible debris in the gap would disappear. Eventually a potential would be reached at which without any foreign matter visible in the gap, sparks would start to occur at unpredictable times but at more or less definite rates. This potential, which will be referred to as the spark threshold, was usually definite within about ± 5% and did not tend to increase appreciably, if at all with time. On subsequent application of voltage,

sparks would not occur until the potential again reached the spark threshold. Above the spark threshold the spark rate would increase, although not precipitously, until at a maximum potential usually not exceeding the spark threshold by more than 10 to 50% the sample would be ruined in a single event as a result of one of the following observed forms of cathode damage:

(a) A puncture penetrating the entire thickness of the glass, often not involving any large-scale fracture. A myriad of short microfractures radiating in all directions from the puncture line would give it the appearance of a miniature piece of Christmas tree tinsel.

(b) A chipped or pitted spot on the surface of the glass.

(c) No mechanical damage, but a patch of evaporated metal, presumably from the anode, typically covering an area of several square millimeters.

In addition, any of these forms of cathode damage might be accompanied by numerous feathery, multiply branching faint white tracks radiating deep into the volume of the glass from tiny scratches or other imperfections on the surface which beforehand were invisible to the naked eye. Samples examined after operation with appreciable sparking at potentials above the spark threshold, but which had not been tested to destruction, were often undamaged in any way.

Spark threshold potentials and maximum potentials observed during these tests are plotted in Fig. 3 as open circles and x's respectively in the part of the figure corresponding to gap lengths less than 0.035 in. Some of the points were obtained with soft glass, others with Pyrex cathodes, some with hemispherical, others with flat anodes. Temperatures ranged from 90° to 215°C. No systematic effects associated with any of these qualifications were noted, and for this reason the individual qualifications of the data points were suppressed. Also shown in Fig. 3 is an indication of the salient features of the spark potential distributions obtained with stainless steel cathodes at small gap length. The solid points represent the most probable spark potential and the upper and lower extremities of the line through the point represent respectively the maximum potential attained and a low-spark-rate condition comparable roughly to the spark threshold for a glass cathode.

In a quiescent state of the system either above or below the spark threshold a small gap current was always observed which increased monotonically and smoothly with voltage, starting at very low voltages (perhaps at zero). In the vicinity of spark threshold the current flow tended to decrease with time at a fixed voltage. On the other hand, as the maximum potential was approached a precursor was often noted in the form of a relatively slow but unstable rise (over seconds) in gap current. Typical relationships of gap current to voltage are shown in Fig. 8.

Observations were made with a NaI counter of the bremsstrahlung from glass and all-metal systems, identical in all respects except for cathode material, which indicated equal yields at equal currents. From this result it is concluded that the carriers of gap current in the low-voltage glass-cathode systems under consideration here must be primarily electrons, not ions, results to be described later notwithstanding which indicate that at higher voltages a dominant process occurs involving mainly ion currents.

Large-Gap High-Voltage Experiments

Large-scale tests at voltages up to 500 kv were performed on actual particle separators. A drawing and photographs of a typical assembly are shown in Figs. 9, 10, and 11. These assemblies were completely enclosed in a thin aluminum shell which served as a heat baffle and were mounted in the usual stainless and mild steel vacuum envelope which was provided with coils and suitable magnetic circuits to set up a uniform magnetic field transverse to the electric field. The systems were evacuated to pressures of a few times 10^{-6} mm Hg by oil diffusion pumps and liquid nitrogen traps. Radiant heaters allowed the entire apparatus within the heat baffle--cathode, anode, and supporting insulators--to be raised to temperatures somewhat in excess of 100°C. Cathodes were made of 27-in.-long slabs of soft glass, 1 in. thick and 10 in. wide, with edges smoothed and radiused to about 1/8 in.; there were dovetail cuts on the back sides for holding and silver paint baked on the back sides to effect large-area electrical contact. Anodes were stainless steel of conventional shape, and both cathodes and anode were supported in the usual manner on zircon standoff insulators with deeply recessed stainless steel "flower pots" on both ends of the insulators. The cathode was made of several separate pieces in order to simplify fabrication and to minimize the effects of thermal expansion.

At voltages between 300 and 400 kv a new phenomenon occurred, one not observed at lower voltages, namely an ion-exchange process. With a sudden onset, identically shaped luminous patches appeared on the cathode and anode, stable at threshold but rapidly becoming intense and developing into unstable discharges as the potential was raised only a few percent above threshold. The threshold voltage for onset of the ion exchange increased at first when the system was forced to discharge repeatedly, but was observed to stabilize eventually at about 400 kv almost independent of gap length, for gap lengths between 1.5 and 7 cm (the complete range of gap lengths used in the tests described).

Identification of the discharge as an ion-exchange process is based on the following observations:

(a) The luminous patches, sometimes covering an area of 1 cm^2 or more, were most intense and, in spite of a certain amount of dancing about, tended to occur mainly at depressed areas of the anode (not a particularly flat surface, but with relative deviations from flatness of as much as 2 mm). This is a natural consequence in an ion exchange if the secondary ions are emitted with essentially zero velocity, viz., the hypothetical exchange trajectories in the vicinity of a depression in the anode sketched in Fig. 12a. A striking demonstration of the same effect occurs when the electrodes are not parallel. In this case a single luminous spot may appear on each electrode at the onset of a discharge, but as the voltage is raised a number of regularly spaced patches develop, spreading out along a line directed toward the widest part of the gap, as depicted in Fig. 12b.

(b) The luminous patches are unaffected by magnetic fields of several hundred gauss transverse to the electric field, which would be expected to cause noticeable distortion or motion of the patches if electrons were involved as significant agents in effecting the exchange (electrons are evidently involved at least in a passive role, as evidenced by high x-ray yields).

After prolonged operation (hours) with a stable ion exchange in progress, inspection has revealed appreciable erosion of the cathode (thousands of angstroms) in the vicinity of the luminous patches, sometimes without any other damage at all. Occasionally currents in excess of 1 ma can flow before an ion-exchange

discharge becomes unstable. At currents greater than about 200 μa, however, cathode damage in addition to erosion usually occurs, apparently as a result of local heating which causes the surface of the glass to chip.

Such an ion-exchange process occurring at an essentially fixed threshold voltage would, if allowed to persist, nullify any practical advantage from the use of glass cathodes at large gap lengths. Shortly after the phenomenon was first observed, however, it was found that it could be suppressed effectively by the introduction of any one of several different gases into the system at pressures from a few tenths of a micron to a few μ of Hg. Air, H_2, He, N_2, and A at similar pressures all produced essentially the same effect--the discharge would simply disappear and the voltage applied to the system could be raised immediately and permanently to a higher value at which some factor other than gap discharge became a limitation. As yet "other factors" have prevented measurement of the true limit of the gap in the large systems. At relatively small gap length (approx 1 cm) mechanical instability occurred due to the large electric forces. At larger gap lengths maximum power-supply voltage and breakdown of auxiliary insulating devices were limitations. Typical operating points actually attained at large gap lengths (but which do not necessarily indicate limits) are shown as open squares in Fig. 3. Also shown in Fig. 3 as open triangles are operating points attained in the three most recent applications of all-metal separator systems. In each case the all-metal systems were spark-rate-limited.

It seems unlikely that the suppression of the ion-exchange process at elevated pressures is the result of collisions, since the effective mean free path of an ion crossing the gap for any kind of collision at pressures of a few tenths of a micron is considerably longer than the gap lengths involved here. Some sort of surface effect could conceivably be responsible, but no experimental evidence is yet available to shed any light on the matter.

It should be noted that at short gap lengths (< 1 mm) the introduction of an inert gas at pressures up to several μ of Hg had no effect except to cause a substantial increase in the normal quiescent gap current. Essentially the same maximum field could be reached with or without gas pressure.

Two 10-ft-long parallel-plate separators equipped with soft glass cathodes have been in successful operation now for more than 3 months in an 800-Mev/c K^- beam at the Bevatron operating at 450 kv (tested to 500 kv) with a gap length of 5 cm, an argon pressure of about 1 μ, and a temperature of about 100°C. Under normal conditions the combined spark rate of the two separators varies between a few per day and a few per hour, much of which can be attributed to sparks on the supporting insulators.

After the first two months of operation there was occasion to open one of the separators, thus affording the only opportunity up to that time for inspection of the glass cathodes. No damage or change in appearance had occurred.

Operation of the separators in a high-energy particle beam of known momentum has provided reaffirmation that the expected electric field actually appears in the gap; that is, the correct high-voltage–magnetic-field current relationship for a given dynamical effect is realized within an uncertainty of a few percent in voltage.

The author would like to acknowledge the encouragement and support of Luis Alvarez and Don Gow, which led to this development, and to express appreciation for technical support from Edward J. Lofgren in connection with the construction of the glass-equipped separators, and further to acknowledge the invaluable contributions of his co-workers Paul Aron, Seth Sheppard, and George Edwards in the design and execution of tests and experiments.

This work was done under the auspices of the U. S. Atomic Energy Commission.

Footnotes and References

1. W. S. Boyle, P. Kisliuk, and L. H. Germer, J. Appl. Phys. 26, 720 (1955).
2. J. G. Trump and R. J. Van de Graaff, J. Appl. Phys. 18, 327 (1947).
3. W. D. Kilpatrick, A Criterion for Vacuum Sparking Designed to Include Both rf and dc, UCRL-2321 (rev) (unpublished).
4. It has been kindly brought to the author's attention by A. Stuart Denholm of High Voltage Engineering Corporation that a glass type EX857G1 supplied by Corning Glass Co. has a resistivity of 10^8 Ω cm at room temperature. No tests of this glass have as yet been made here.

Figure Legends

Fig. 1. Volume resistivity as a function of temperature for various glasses.

Fig. 2. Equivalent circuit for soda-lime glass for frequencies between 10 cps and 50×10^3 cps, together with values of the specific parameters of the glass deduced from impedance measurements at temperatures of 140, 160, and 200°C.

Fig. 3. Gap length versus electric field in vacuum-insulated high-voltage systems--comparison of performance of all-metal and glass-cathode-equipped systems.

Fig. 4. Equilibrium spark potential distributions obtained with stainless steel electrodes of size and shape indicated in the accompanying sketches where capacity across the gap is also given. (All hemispheres 1 in. in diameter.)

Fig. 5. Over-all schematic of the low-voltage test apparatus.

Fig. 6. Schematic cross section of the oven and electrode assembly in the low-voltage test apparatus.

Fig. 7. Ratio of electromechanical to optical gap-length measurements as a function of voltage, obtained by using a soda-lime glass cathode (1/4 in. thick) and a hemispherical stainless steel anode (type 303, 2 in. diam). No-field gap length 0.025 in.; temperature 150°C.

Fig. 8. Typical gap-current–voltage relationships observed with glass cathodes at small gap lengths. (Cathodes: soda-lime, glass, 1/4-in. thick; anode: circular type 303 stainless steel, 10 cm^2 area; gap length 0.031 in.; temperature 60°C for ⊙, 160°C for ⊡.

Fig. 9. Separator assembly, withdrawn from vacuum tank and with heat baffle partially removed.

Fig. 10. Separator assembly, showing high-voltage connection to cathode.

Fig. 11. Separator assembly, cross section.

Fig. 12. Schematic of hypothetical ion-exchange trajectories, (a) in the vicinity of a depression in the anode surface, and (b) for nonparallel electrodes, where in both cases the secondary ions are supposed to be emitted with near zero initial velocity.

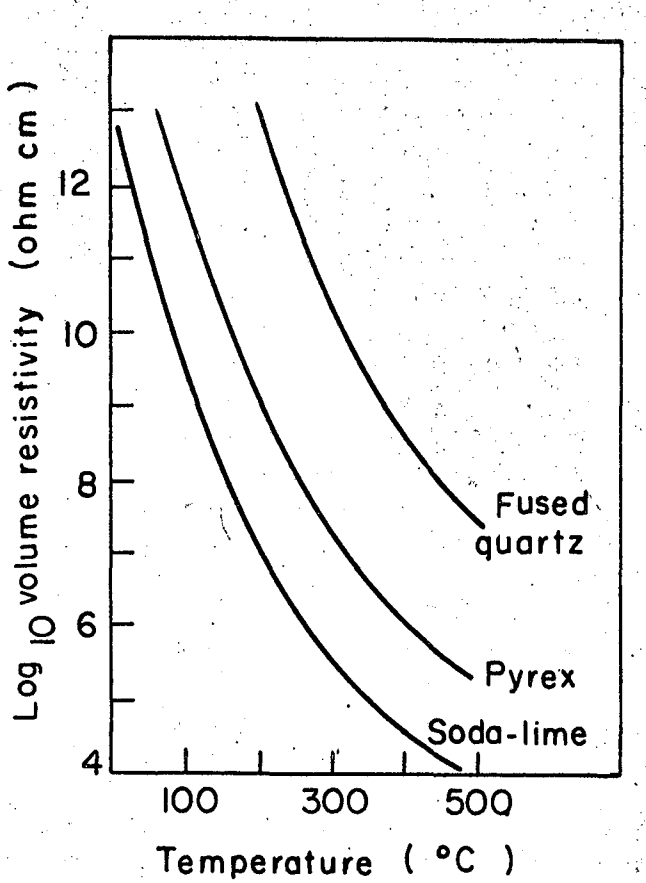

MU-22321

Fig. 1

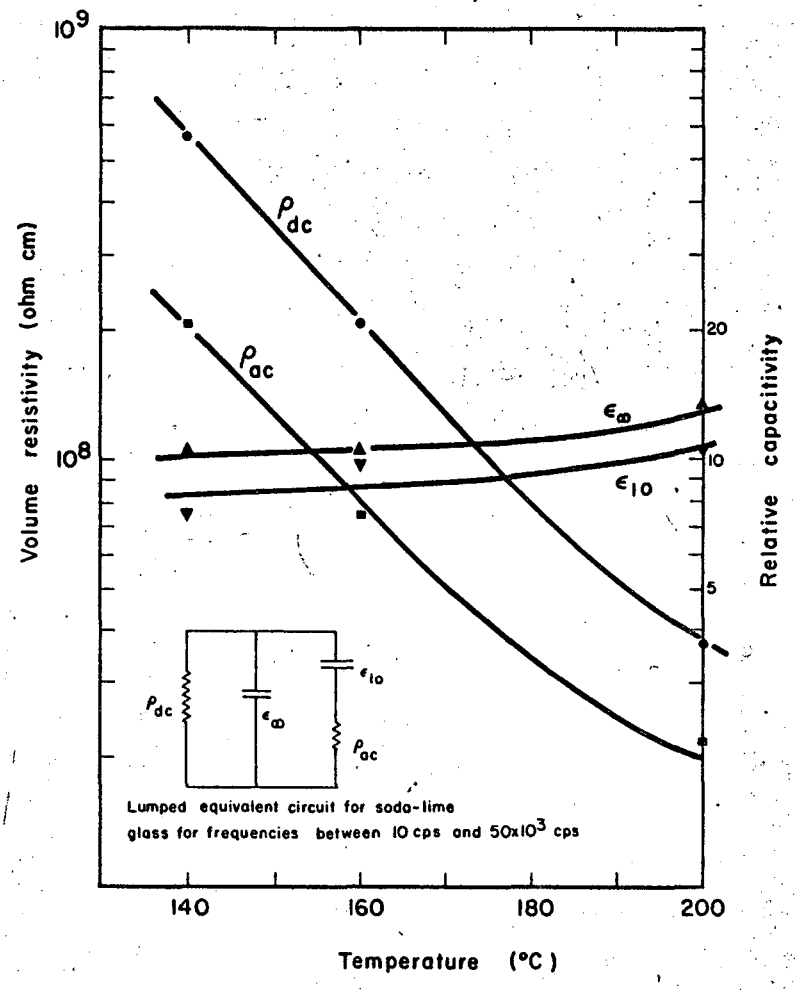

MU-22320

Fig. 2

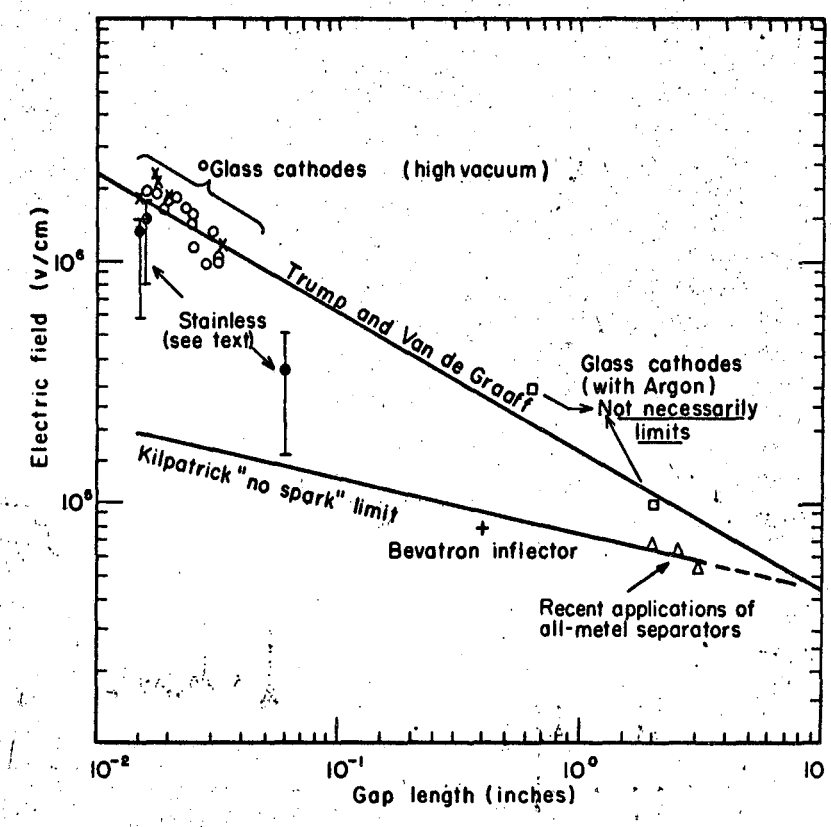

MU-22313

Fig. 3

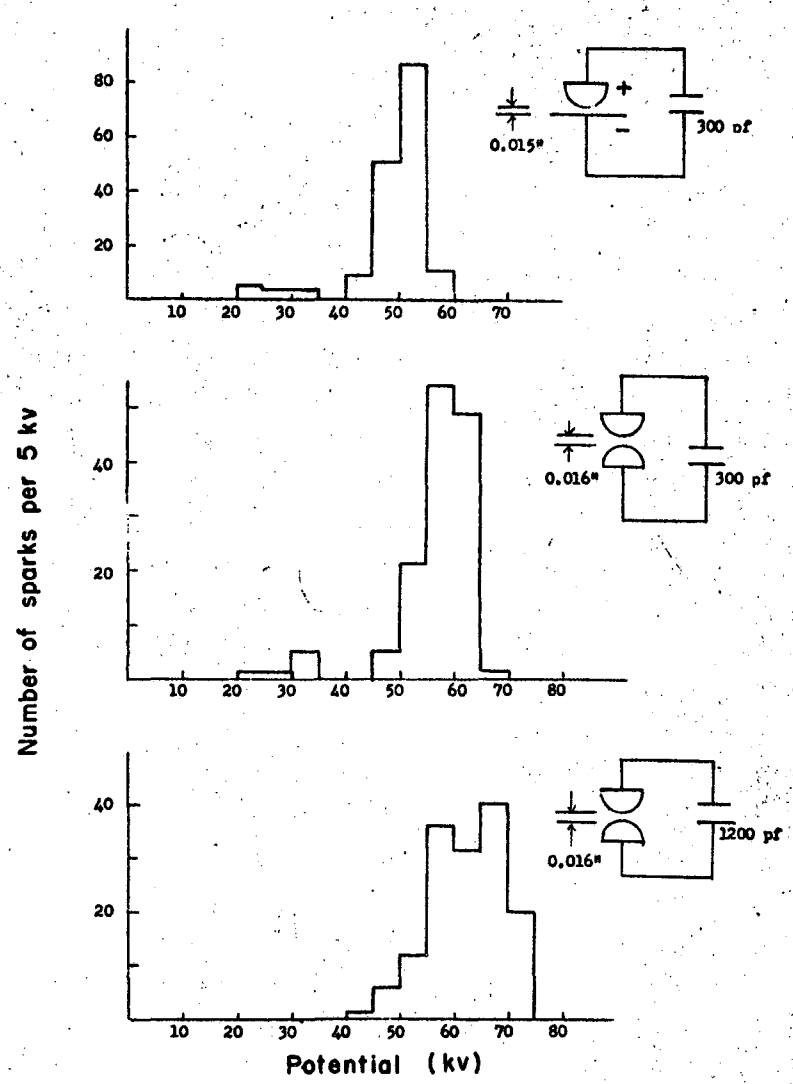

MU-22316

Fig. 4

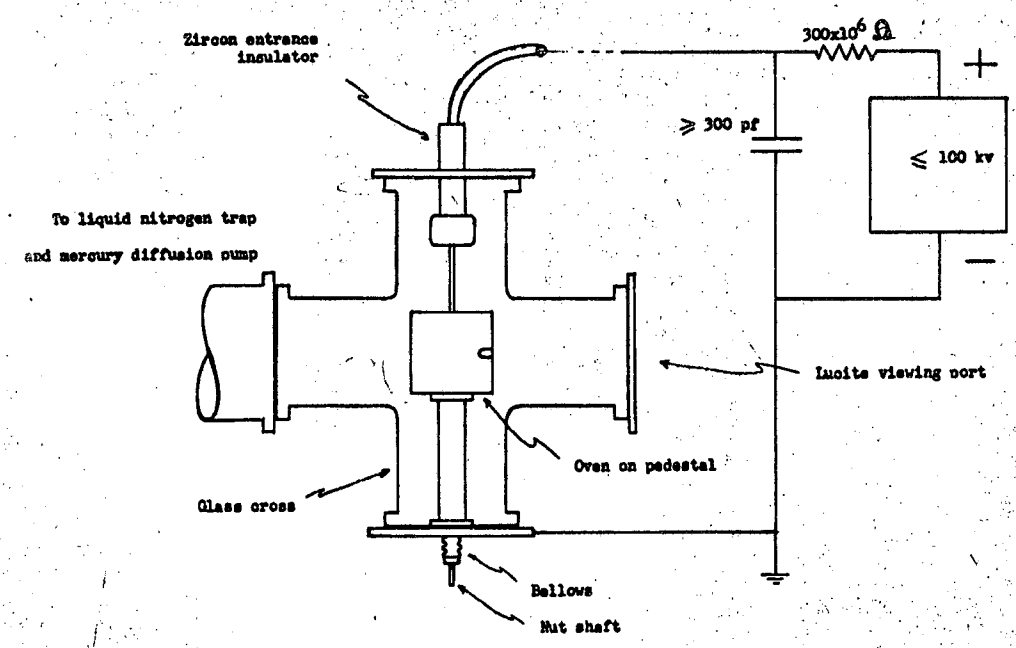

MU-22322

Fig. 5

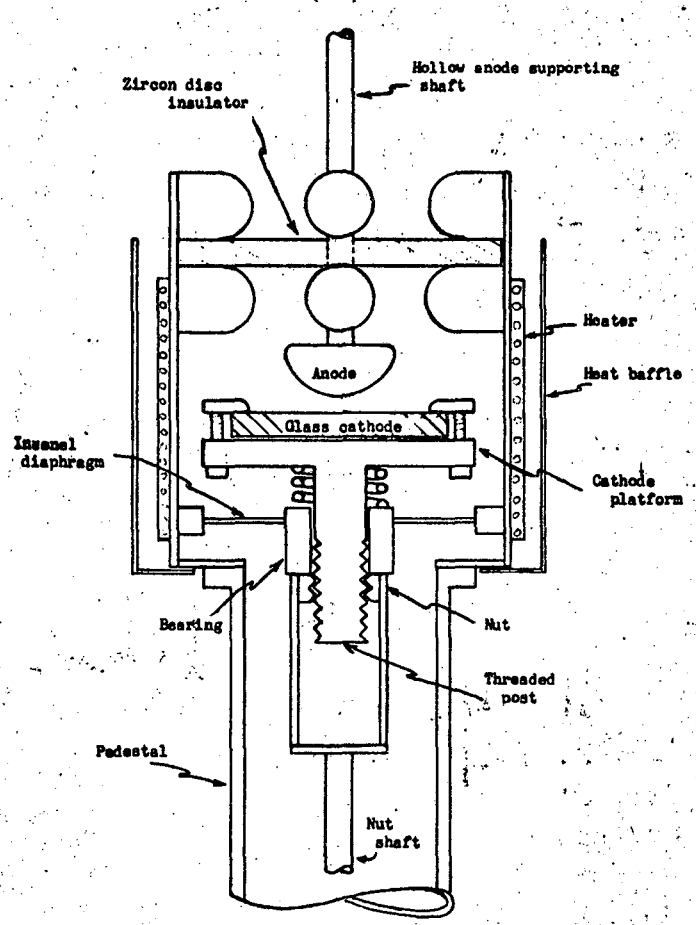

~~for~~ 4
≈ 2 mm gap

MU-22315

Fig. 6

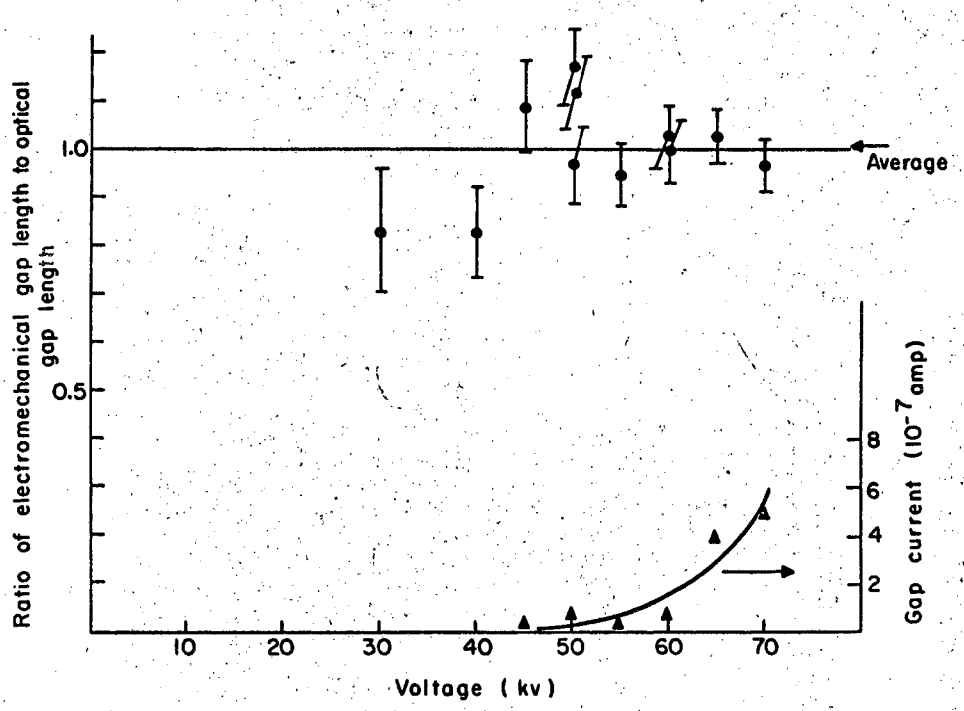

MU-22319

Fig. 7

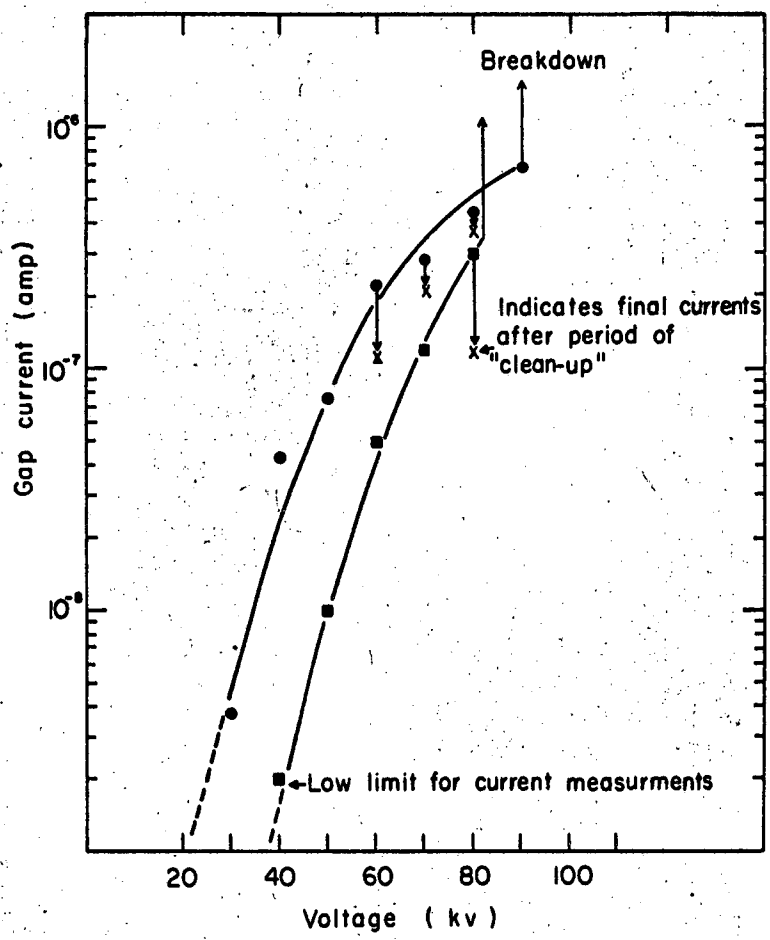

MU-22318

Fig. 8

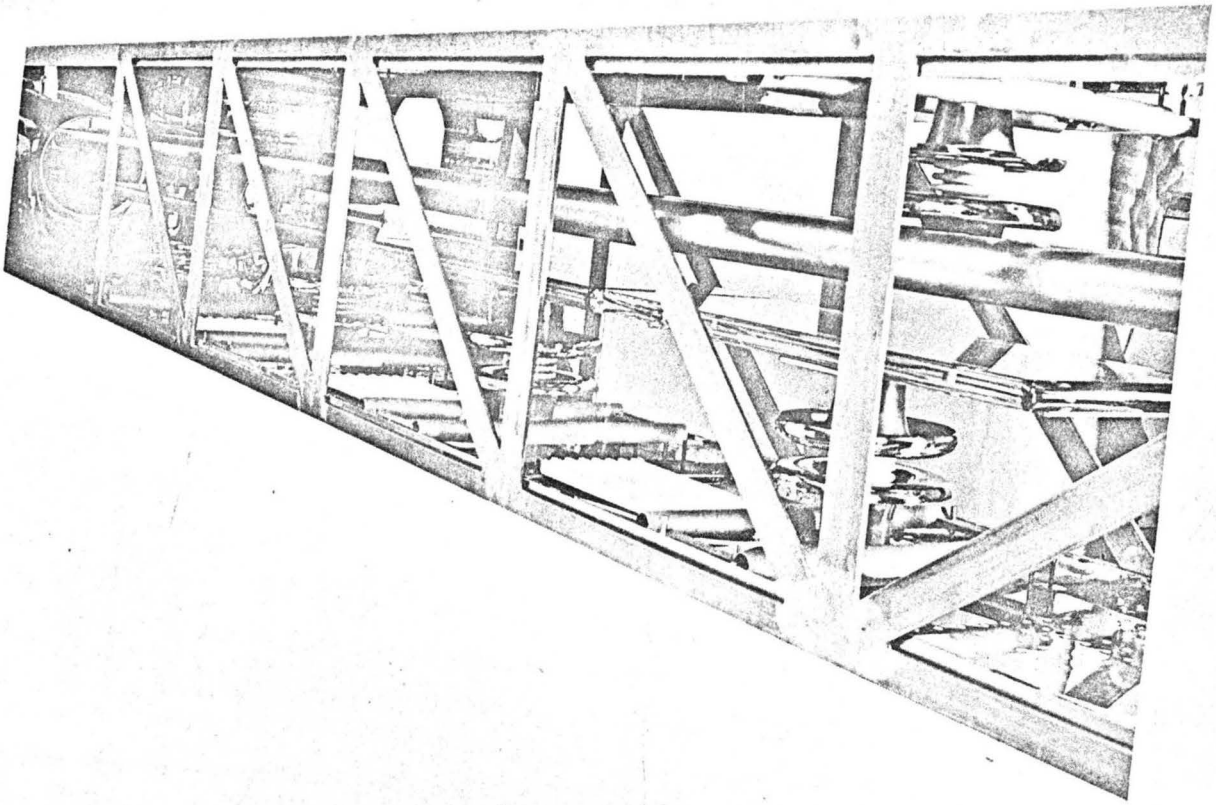

ZN-2639

Fig. 9

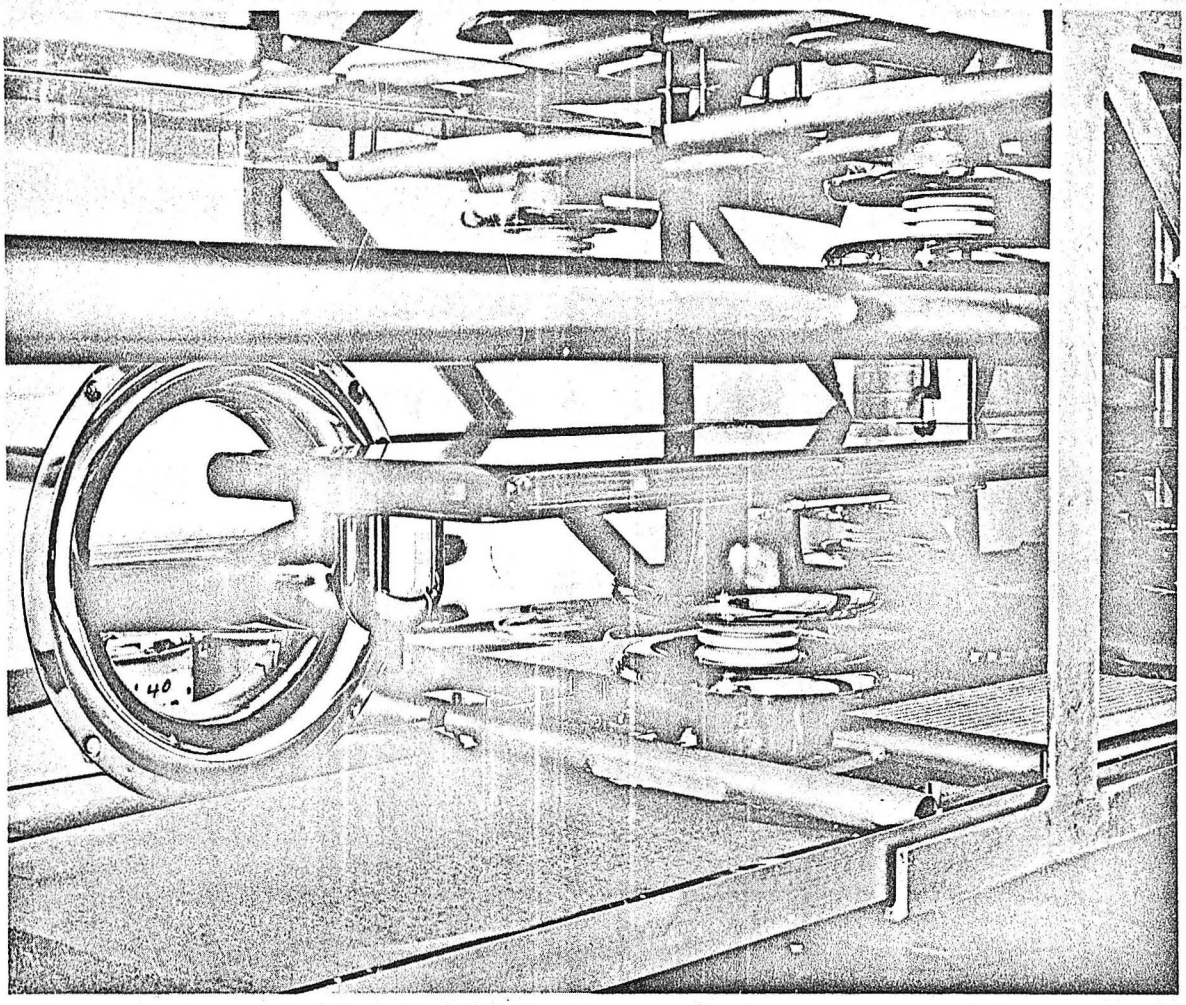

ZN-2638

Fig. 10

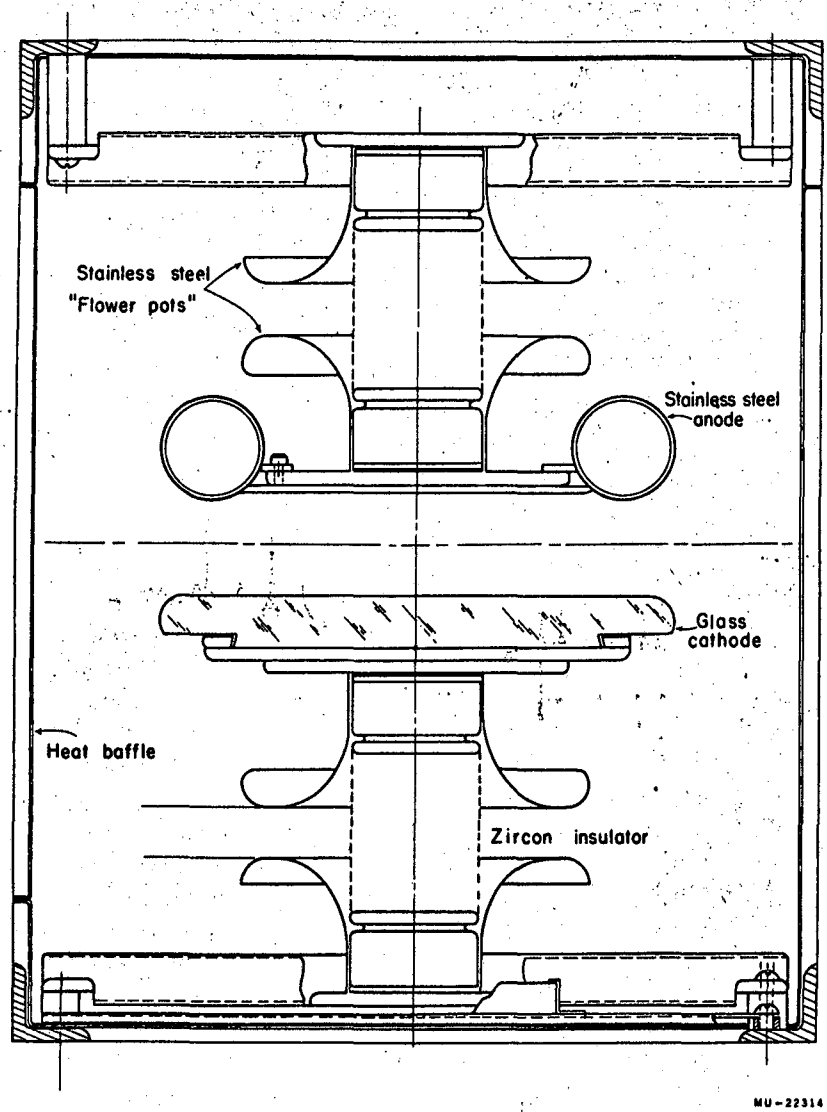
Stainless steel
"Flower pots"
Stainless steel
anode
Glass
cathode
Heat baffle
Zircon insulator
MU-22314

Fig. 11

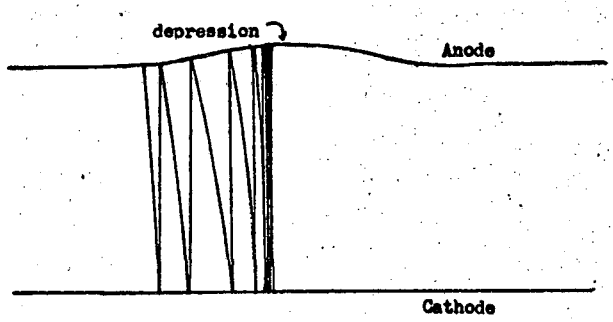

(a)

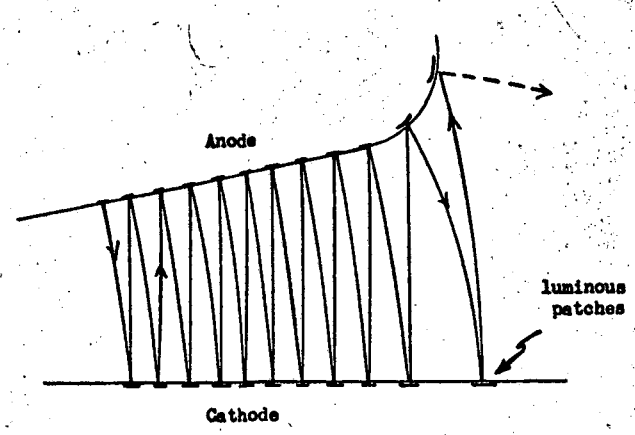

(b)

MU-22317

Fig. 12

This report was prepared as an account of Government sponsored work. Neither the United States, nor the Commission, nor any person acting on behalf of the Commission:

A. Makes any warranty or representation, expressed or implied, with respect to the accuracy, completeness, or usefulness of the information contained in this report, or that the use of any information, apparatus, method, or process disclosed in this report may not infringe privately owned rights; or

B. Assumes any liabilities with respect to the use of, or for damages resulting from the use of any information, apparatus, method, or process disclosed in this report.

As used in the above, "person acting on behalf of the Commission" includes any employee or contractor of the Commission, or employee of such contractor, to the extent that such employee or contractor of the Commission, or employee of such contractor prepares, disseminates, or provides access to, any information pursuant to his employment or contract with the Commission, or his employment with such contractor.

LAWRENCE RADIATION LABORATORY - UNIVERSITY OF CALIFORNIA
PHYSICS NOTES | Berkeley | MEMO NO. 119 | PAGE 1

SUBJECT: ACHROMATIC DEFLECTION IN E-H FIELD

NAME: Joe Murray

DATE: October 30, 1959

In some applications of electromagnetic particle separation it may be desirable to transmit the desired particles over a relatively wide momentum interval. To this end it may be useful under suitable conditions to take advantage of the fact that the angular deflection of a particle in a crossed E - H field will to first order be independent of the velocity of the particle at a particular velocity determined by (but not equal to) the ratio E/H.

For the sake of definiteness, consider the common case of uniform fields with the direction of motion of the particles parallel to the direction of $\vec{E} \times \vec{H}$. The angular deflection of a particle in this case is given approximately, for small deflections, by

$$\Theta = \frac{\beta H - E}{p} L/\beta = \frac{\beta/\beta_0 - 1}{\gamma\beta^2}\left(\frac{EL}{M}\right)$$

If $E/H = \beta_0 = \beta_m/(2-\beta_m^2)$, it is easily shown that at the velocity $\beta = \beta_m$ the angular deflection is maximum, hence independent, to first order, of the velocity. The maximum angular deflection is given by

$$\Theta_m = \frac{1}{\gamma_m^3\beta_m^2}\left(\frac{EL}{M}\right)$$

with the second order deflection sensitivity to momentum at maximum deflection given by

$$\left|\frac{p^2}{2}\frac{d^2\Theta}{dp^2}\right|_{\beta=\beta_m} = \frac{1}{2\gamma_m^3}\left(\frac{EL}{M}\right) ;$$

that is,

$$(\Delta\Theta)_m = \Theta(p_m) - \Theta\left(p_m \pm \frac{\Delta p}{2}\right) \doteq \frac{1}{4}\left[\frac{1}{2\gamma_m^3}\left(\frac{EL}{M}\right)\right]\left(\frac{\Delta p}{p_m}\right)^2$$

For comparison one finds near $\beta = \beta_0$ that

$$(\Delta\Theta)_0 = \Theta\left(p_0 + \frac{\Delta p}{2}\right) - \Theta\left(p_0 - \frac{\Delta p}{2}\right) = \frac{1}{\gamma_0^3\beta_0^2}\left(\frac{EL}{M}\right)\frac{\Delta p}{p_0}$$

Suppose one compares two systems having equal angular acceptance ($\Delta\Theta$) each designed to transmit particles of velocity β_t but with one system operated conventionally ($\beta_0 = \beta_t$), the other achromatically ($\beta_m = \beta_t$). Then

$$(\Delta p/p_t)_{achromatic} \sim (8/\beta_t^2)^{1/2}(\Delta p/p_t)^{1/2}_{conventional} .$$

$(\Delta p/p)_{conventional}$ is typically $\gtrsim 10^{-2}$. At high momentum ($\beta_t \sim 1$) one can then expect to find in achromatic systems $(\Delta p/p)_{achromatic} \sim 0.3$.