UCRL--9559

UNIVERSITY OF CALIFORNIA

Ernest O. Lawrence Radiation Laboratory

TWO-WEEK LOAN COPY

This is a Library Circulating Copy which may be borrowed for two weeks. For a personal retention copy, call Tech. Info. Division, Ext. 5545

BERKELEY, CALIFORNIA

DISCLAIMER

This document was prepared as an account of work sponsored by the United States Government. While this document is believed to contain correct information, neither the United States Government nor any agency thereof, nor the Regents of the University of California, nor any of their employees, makes any warranty, express or implied, or assumes any legal responsibility for the accuracy, completeness, or usefulness of any information, apparatus, product, or process disclosed, or represents that its use would not infringe privately owned rights. Reference herein to any specific commercial product, process, or service by its trade name, trademark, manufacturer, or otherwise, does not necessarily constitute or imply its endorsement, recommendation, or favoring by the United States Government or any agency thereof, or the Regents of the University of California. The views and opinions of authors expressed herein do not necessarily state or reflect those of the United States Government or any agency thereof or the Regents of the University of California.

UCRL-9559

UNIVERSITY OF CALIFORNIA
Lawrence Radiation Laboratory
Berkeley, California

Contract No. W-7405-eng-48

STATISTICAL THEORY OF THE DIELECTRIC CONSTANT OF AN IMPERFECT GAS

Allan N. Kaufman and Kenneth M. Watson

February 2, 1961

STATISTICAL THEORY OF THE DIELECTRIC CONSTANT OF AN IMPERFECT GAS

Allan N. Kaufman and Kenneth M. Watson

Physics Department and Lawrence Radiation Laboratory
University of California
Berkeley and Livermore, California

February 2, 1961

ABSTRACT

By means of the linked-diagram expansion of the grand partition function of a molecular gas in an electrostatic field, an expression for the polarization $\underset{\sim}{P}(\underset{\sim}{R})$ of the gas is obtained. Spatial variation of the external electric field $\underset{\sim}{E}_0(\underset{\sim}{R})$ requires an explicit treatment of long-range cooperative interactions between "clusters" of molecules. For fields that vary appreciably over microscopic dimensions, an integral relation is found relating the polarization $\underset{\sim}{P}(\underset{\sim}{R})$ to the electric field $\underset{\sim}{E}(\underset{\sim}{R})$. For fields varying negligibly over microscopic regions, an expression for the dielectric constant K of the gas is obtained:

$$\frac{K - 1}{K + 2} = \frac{4\pi}{3} \sum_{m=1}^{\infty} z^m \alpha'_m(\theta) .$$

This generalization of the Clausius-Mossotti formula involves the activity z and the temperature-dependent polarizability α'_m of an m-molecule linked cluster.

STATISTICAL THEORY OF THE DIELECTRIC CONSTANT OF AN IMPERFECT GAS*

Allan N. Kaufman and Kenneth M. Watson

Physics Department and Lawrence Radiation Laboratory
University of California
Berkeley and Livermore, California

February 2, 1961

I. INTRODUCTION

Statistical mechanics provides a method of calculating the properties of a system in thermodynamic equilibrium from an evaluation of the partition function. Recently diagrammatic techniques have been developed to enable one to perform this evaluation for a many-body system.[1-4] In a previous paper,[5] which will be referred to as I, we applied the technique developed by Glassgold, Heckrotte, and Watson[4] to the system of a gas of neutral molecules, taking into account the structure of the molecules and the operation of the Pauli principle among all the electrons of the system; the nuclei in different molecules were, however, treated as distinguishable, and the motion of the molecular centers of mass was treated classically. The result of that paper was the well-known Ursell-Mayer expansion,[6] with the classical cluster integrals suitably generalized for molecular structure and the Pauli principle. This generalization had previously been obtained by a different method by Ono and Kilpatrick.[7]

The present paper applies the method of I to the system of a gas of neutral molecules in an external electrostatic field.[8] In contrast to I, the interaction of the molecules now has a long-range (dipole-dipole) contribution. Response of the system to the field is characterized by the polarization, or mean dipole density, of the gas. In Sec. II, after some preliminaries, we

* This work was supported in part by the U. S. Atomic Energy Commission and in part by the U. S. Air Force under Contract No. AF 49(638)-508, monitored by the Air Force Office of Scientific Research, Air Research and Development Command.

relate the dipole density to the Hamiltonian (Eq. 2.19). In Sec. III the polarization is then related to the grand partition function (Eq. 3.2), and contact is made with classical electrostatic theory. In this paper we consider only the linear term in the relation between the external field and the polarization;[9] the required formulas are quoted from I at the end of Sec. III. Evaluation proper begins with a discussion of single-molecule graphs (see Fig. 1) in Sec. IV, leading to the concept of polarizability. It is shown that polar and nonpolar molecules can be treated in the same way. Section V then takes up a particularly simple type of graph (called a simple chain; see Fig. 2), in which each molecule has just two interactions. The Hugenholtz theorem (Appendix A) is used to evaluate the sum of all simple chains; we believe that the technique employed should be useful also in other calculations.

Section VI is devoted to an evaluation of the "cluster chains" (see Fig. 6); this type of graph separates short- and long-range interactions. The result of the calculation is a series for the Clausius-Mossotti function in powers of the activity (Eqs. 6.27 and 6.28). The coefficients of the series are functions of the temperature and are the polarizabilities (Eq. 6.29) of m-molecule linked clusters. Equation (6.34) is the corresponding expansion in powers of the density,[10] and involves also the zero-field cluster integrals. Finally, it is shown that only cluster chains contribute appreciably to the partition function, so that the approximation of keeping only such graphs is a satisfactory one.

In a subsequent paper we shall discuss the explicit evaluation of the m-molecule polarizabilities, and shall relate our results to those of previous investigators.[11]

II. MOLECULAR DYNAMICS

We consider a gas of N neutral molecules, of a single species, contained in a volume $\mathcal{V}$. The only external field acting on the gas is an electrostatic field $\underset{\sim}{E}_0(\underset{\sim}{R})$, due to fixed charge sources. When the gas is removed, $\underset{\sim}{E}_0(\underset{\sim}{R})$ is the actual field; but in the presence of the gas, the total field $\underset{\sim}{E}(\underset{\sim}{R})$ includes also the field due to the polarization of the molecules of the gas.[12] We propose to evaluate the field $\underset{\sim}{E}$ and the polarization, using the "linked diagram" expansion of I.

As in I, we use Boltzmann statistics for the molecules, and number them $i = 1,\ldots,N$. Let $\underset{\sim}{R}_i$ be the position operator of the center of mass of the ith molecule, and let $\underset{\sim}{r}_\rho$ be the position operator of the ρth particle (electron or nucleus) relative to the center of mass of the molecule. The charge density operator of the ith molecule is thus

$$\epsilon_i(\underset{\sim}{r}) \equiv \Sigma_\rho^{\,i}\, q_\rho\, \delta(\underset{\sim}{r} - \underset{\sim}{r}_\rho) \;, \tag{2.1}$$

where q_ρ is the charge of the ρth particle. Because of the assumed neutrality of the molecules, we have

$$\int d^3r\, \epsilon_i(\underset{\sim}{r}) = 0 \;. \tag{2.2}$$

The Coulomb interaction energy of two molecules is

$$V_{ij} = \int d^3r \int d^3r'\, \epsilon_i(\underset{\sim}{r})\, \epsilon_j(\underset{\sim}{r}') \left| (\underset{\sim}{R}_i + \underset{\sim}{r}) - (\underset{\sim}{R}_j + \underset{\sim}{r}') \right|^{-1} , \tag{2.3}$$

and the total Coulomb interaction energy is

$$V^{\text{int}} = \Sigma_{i<j}\, V_{ij} \;. \tag{2.4}$$

When the separation $\underset{\sim}{R}_{ij} \equiv \underset{\sim}{R}_i - \underset{\sim}{R}_j$ of two molecules is large compared with molecular dimensions, the interaction energy (Eq. 2.3) reduces to

$$V_{ij} = \underset{\sim}{p}_i \cdot \underset{\sim}{\Lambda}_{ij} \cdot \underset{\sim}{p}_j \quad , \tag{2.5}$$

where

$$\underset{\sim}{p}_i \equiv \int d^3r \, \underset{\sim}{r} \, \epsilon_i(\underset{\sim}{r}) \equiv \Sigma_\rho^{\,i} \, q_\rho \, \underset{\sim}{r}_\rho \tag{2.6}$$

is the electric dipole moment (operator) of the ith molecule, and

$$\underset{\sim}{\Lambda}_{ij} \equiv \underset{\sim}{\Lambda}(\underset{\sim}{R}_i, \underset{\sim}{R}_j) \equiv \nabla_i \, \nabla_j \, R_{ij}^{-1} \equiv (\underset{\sim}{I} \, R_{ij}^{\,2} - 3 \, \underset{\sim}{R}_{ij} \, \underset{\sim}{R}_{ij}) R_{ij}^{-5} \, , \tag{2.7}$$

with $\underset{\sim}{I}$ the unit dyadic.

The energy of interaction of the ith molecule with the external field $\underset{\sim}{E}_0$ is

$$V_i = \int d^3r \, \epsilon_i(\underset{\sim}{r}) \, \phi_0(\underset{\sim}{R}_i + \underset{\sim}{r}), \tag{2.8}$$

where ϕ_0 is the external potential: $E_0 = - \nabla \phi_0$; the total external interaction energy is

$$V^{ext} = \Sigma_i \, V_i \quad . \tag{2.9}$$

We shall suppose that the external field is macroscopic, in that $\underset{\sim}{E}_0$ is effectively constant over any region whose dimensions are of the order of the size of a molecule. Then, with Eq. (2.2), (2.8) reduces to

$$V_i = - \underset{\sim}{p}_i \cdot \underset{\sim}{E}_0(\underset{\sim}{R}_i) \, . \tag{2.10}$$

Let h_i be the Hamiltonian of the isolated ith molecule. As discussed in I, h_i is an operator with respect to those electrons assigned

to molecule i. It includes interactions among these electrons and with the nuclei of i, but excludes their interactions with electrons and nuclei in other molecules. The (properly antisymmetrized) eigenstates and eigenvalues of h_i are given by

$$h_i \mid \lambda_i \rangle = [(k_i^2/2M) + e_i] \mid \lambda_i \rangle \quad . \tag{2.11}$$

Because h_i is invariant under the parity operation, we may in case of degeneracy choose the states $\mid \lambda_i \rangle$ to be parity eigenstates. It follows that the dipole operator has no diagonal elements:

$$\langle \lambda_i \mid \underset{\sim}{p}_i \mid \lambda_i \rangle = 0 \; . \tag{2.12}$$

The total Hamiltonian is

$$H = K + V^{int} + V^{ext} \; , \tag{2.13}$$

where

$$K \equiv \Sigma_i \, h_i \tag{2.14}$$

is the Hamiltonian for noninteracting molecules. The eigenstates of K are products of those of h_i :

$$K \mid \Lambda \rangle = E_\Lambda \mid \Lambda \rangle \; , \tag{2.15}$$

where

$$\mid \Lambda \rangle = \prod_i \mid \lambda_i \rangle \quad . \tag{2.16}$$

Although H is invariant under electron interchange between molecules, K is not, since it selects interactions according to the assignment of the electrons to the molecules. Thus the states $\mid \Lambda \rangle$ do not satisfy the

Pauli principle. In I we have shown how to take the Pauli principle into account when doing a perturbation calculation in $V^{int} + V^{ext}$.

Let us introduce the dipole density operator,

$$\underset{\sim}{P}(\underset{\sim}{R}) = \Sigma_i \, \underset{\sim}{p}_i \, \delta(\underset{\sim}{R} - \underset{\sim}{R}_i) \; . \tag{2.17}$$

The external interaction can now be written as

$$V^{ext} = - \int d^3R \, \underset{\sim}{P}(\underset{\sim}{R}) \cdot \underset{\sim}{E}_0(\underset{\sim}{R}) \; . \tag{2.18}$$

Thus the dipole density can be expressed as a functional derivative of the Hamiltonian:

$$\underset{\sim}{P}(\underset{\sim}{R}) = - \delta H / \delta \underset{\sim}{E}_0(\underset{\sim}{R}) \; . \tag{2.19}$$

III. STATISTICAL MECHANICS

The properties of the gas in thermal equilibrium are derivable from the grand partition function

$$\mathcal{Z}(\theta, \mu, \mathcal{V}, \underset{\sim}{E}_0(\underset{\sim}{R})) = \Sigma_N (N!)^{-1} \; e^{\beta\mu N} \, \mathrm{Tr}\, e^{-\beta H} , \tag{3.1}$$

where $\theta \equiv \beta^{-1}$ is the temperature of the gas, μ is its chemical potential, and $\mathcal{V}$ represents the volume of the particular vessel containing the gas. We define the polarization as the statistical mean of the dipole density,

$$\begin{aligned} \langle \underset{\sim}{P} \rangle(\underset{\sim}{R}) &= \mathcal{Z}^{-1} \Sigma_N (N!)^{-1} \, e^{\beta\mu N} \, \mathrm{Tr} \, \{ e^{-\beta H} \left[-\delta H / \delta \underset{\sim}{E}_0(\underset{\sim}{R}) \right] \} \\ &= \theta \, \delta \, \ln \mathcal{Z} / \delta \underset{\sim}{E}_0(\underset{\sim}{R}) \, . \end{aligned} \tag{3.2}$$

In terms of the thermodynamic potential $\Omega \equiv - \theta \ln \mathcal{Z}$, this reads

$$\delta\Omega = - \int d^3R \, \langle \underset{\sim}{P} \rangle(\underset{\sim}{R}) \cdot \delta \, \underset{\sim}{E}_0(\underset{\sim}{R}) \, , \tag{3.3}$$

where θ, μ, and $\mathcal{V}$ are held constant. In our subsequent discussion, we shall drop the angular bracket notation on $\langle \underset{\sim}{P} \rangle$ and let it be understood.

We follow Brown[13] in defining the macroscopic field $\underset{\sim}{E}(\underset{\sim}{R})$ as the sum of the external field and that due to the macroscopic polarization:

$$\underset{\sim}{E}(\underset{\sim}{R}) = \underset{\sim}{E}_0(\underset{\sim}{R}) - \nabla_R \int d^3R' \, \underset{\sim}{P}(\underset{\sim}{R}') \cdot \nabla_{R'} \, | \underset{\sim}{R} - \underset{\sim}{R}' |^{-1} \, . \tag{3.4}$$

As we have shown elsewhere,[14] this field differs in general from the statistical mean of the microscopic field; but it is the appropriate definition for the development of macroscopic electrostatics. Since the integrand of the second term is singular at $\underset{\sim}{R} = \underset{\sim}{R}'$, let us exclude an infinitesimal sphere about $\underset{\sim}{R}$ from the integration volume; this does not change the value of the integral. We may then perform the operation ∇_R

on both the integrand and the limits of integration, and find

$$\underset{\sim}{E}(\underset{\sim}{R}) = \underset{\sim}{E}_0(\underset{\sim}{R}) - \int' d^3R' \, \underset{\sim}{A}(\underset{\sim}{R}, \underset{\sim}{R}') \cdot \underset{\sim}{P}(\underset{\sim}{R}') - \frac{4}{3}\pi \, \underset{\sim}{P}(\underset{\sim}{R}) \, . \tag{3.5}$$

The prime on the integral sign indicates that an infinitesimal sphere is to be excluded. We now use the fact that $\underset{\sim}{P}(\underset{\sim}{R})$ varies only macroscopically to replace the infinitesimal sphere by one of finite but macroscopically small radius R_0. This is possible because the angular integration of $\underset{\sim}{A}$ vanishes.

We see from Eq. (3.4) that $\underset{\sim}{E}$ satisfies

$$\nabla \times \underset{\sim}{E} = 0 \tag{3.6}$$

$$\nabla \cdot \underset{\sim}{E} = \nabla \cdot \underset{\sim}{E}_0 - 4\pi \, \nabla \cdot \underset{\sim}{P} \, . \tag{3.7}$$

As usual we introduce the conventional definition of the displacement field[13,14]

$$\underset{\sim}{D} \equiv \underset{\sim}{E} + 4\pi \, \underset{\sim}{P} \, , \tag{3.8}$$

whose sources are those of the external field

$$\nabla \cdot \underset{\sim}{D} = \nabla \cdot \underset{\sim}{E}_0 \, . \tag{3.9}$$

The energy of the external sources is

$$U_0 = \int d^3R \; E_0^{\,2}/8\pi \, , \tag{3.10}$$

and satisfies

$$\delta \, U_0 = (4\pi)^{-1} \int d^3R \, \underset{\sim}{E}_0 \cdot \delta \, \underset{\sim}{E}_0 \, . \tag{3.11}$$

Let us now use the theorem that for two fields $\underset{\sim}{A}$, $\underset{\sim}{B}$ satisfying $\nabla \cdot \underset{\sim}{A} = 0$, $\nabla \times \underset{\sim}{B} = 0$, the spatial integral of their scalar product vanishes:

$$\int d^3R \, \underset{\sim}{A}(\underset{\sim}{R}) \cdot \underset{\sim}{B}(\underset{\sim}{R}) = 0 \, . \tag{3.12}$$

We can then write Eq. (3.11), with the help of (3.9), as

$$\delta U_0 = (4\pi)^{-1} \int d^3R \, \underset{\sim}{D} \cdot \delta \underset{\sim}{E}_0 , \tag{3.13}$$

and add it to Eq. (3.3):

$$\delta(\Omega + U_0) = (4\pi)^{-1} \int d^3R \, \underset{\sim}{E} \cdot \delta \underset{\sim}{E}_0 . \tag{3.14}$$

Using Eqs. (3.12), (3.9), and (3.6), we then obtain the well-known relation for the <u>total</u> free energy,

$$\delta(\Omega + U_0) = (4\pi)^{-1} \int d^3R \, \underset{\sim}{E} \cdot \delta \underset{\sim}{D} , \tag{3.15}$$

where θ, μ, and $\mathcal{V}$ are held constant.

It is evident that Ω must be an even functional of $\underset{\sim}{E}_0(\underset{\sim}{R})$. In this paper we confine our attention to the lowest nonvanishing effects of $\underset{\sim}{E}_0$, those of second order. The polarization is then a linear functional of $\underset{\sim}{E}_0$, and Eq. (3.3) can be integrated to

$$\Omega(\theta, \mu, \mathcal{V}, \underset{\sim}{E}_0) = \Omega(\theta, \mu, \mathcal{V}, 0) - \frac{1}{2} \int d^3R \, \underset{\sim}{P}(\underset{\sim}{R}) \cdot \underset{\sim}{E}_0(\underset{\sim}{R}) , \tag{3.16}$$

which we abbreviate as

$$\Omega = \Omega^{(0)} + \Omega^{(2)} , \tag{3.17}$$

with

$$\Omega^{(2)} = -\frac{1}{2} \int d^3R \, \underset{\sim}{P}(\underset{\sim}{R}) \cdot \underset{\sim}{E}_0(\underset{\sim}{R}) . \tag{3.18}$$

The linked-diagram expansion of I enables us to evaluate Eq. (3.18) and thus to find the linear relationship of $\underset{\sim}{P}$ to $\underset{\sim}{E}_0$. As one expects, this is of the form

$$\underset{\sim}{P}(\underset{\sim}{R}) = \chi \, \underset{\sim}{E}(\underset{\sim}{R}) , \tag{3.19}$$

if $\underset{\sim}{E}_0$ varies inappreciably over the distance R_0. Because of our restriction to linearity in Eq. (3.19), χ is necessarily of zero order in $\underset{\sim}{E}_0$ and is thus independent of position, depending only on temperature and chemical potential. In a subsequent publication we plan to investigate nonlinear effects, which will determine the spatial variation of χ and of density, as well as explicit modification of the form of (3.19).

In Eq. (3.35) of I, we showed that $\ln \mathcal{Z}$ could be expressed as

$$\ln \mathcal{Z} = \Sigma_{m=1}^{\infty} F_m , \tag{3.20}$$

where

$$F_m \equiv (m!)^{-1} e^{\beta\mu m} L_m [\mathrm{Tr} \exp(-\beta H^m)] \tag{3.21}$$

represents the contribution of all m-molecule linked graphs. The total Hamiltonian for the m molecules is H^m, the trace is over properly antisymmetrized states for all the electrons of the m molecules, and the operator L_m selects the linked graphs, as explained in I.

As in Sec. IV of I, we shall treat the molecular center-of-mass motion classically, obtaining

$$F_m = (m!)^{-1} (e^{\beta\mu}/\lambda\!\!\!^{-3})^m L_m \left\{ \int d^3R^{(m)} \mathrm{Tr} \exp[-\beta H^m(R^{(m)})] \right\} . \tag{3.22}$$

Here $\lambda\!\!\!^{-}$ is the thermal wave length

$$\lambda\!\!\!^{-} \equiv (2\pi/M\Theta)^{1/2} , \tag{3.23}$$

and $H^m(\underset{\sim}{R}^{(m)})$ differs from H^m by omitting the center-of-mass kinetic energy terms $k_i^2/2M$. Henceforth this omission will be implicitly understood

also in K and h_i of Eqs. (2.11) and (2.14). Again we introduce the activity

$$z \equiv \gamma\, e^{\beta\mu}/\lambda^3 , \tag{3.24}$$

where

$$\gamma \equiv \Sigma_\lambda\, e^{-\beta e(\lambda)} \tag{3.25}$$

is the single-molecule internal partition function in the absence of a field, and $e(\lambda)$ is the molecular energy defined by Eq. (2.11). We then have, in the linear approximation,

$$\underset{\sim}{P}(\underset{\sim}{R}) = \theta\ \Sigma_{m=1}^{\infty}\ \delta\, F_m^{(2)}/\delta\, \underset{\sim}{E}_0(\underset{\sim}{R}) , \tag{3.26}$$

where

$$F_m^{(2)} = (z^m/\gamma^m\, m!)\ L_m^{(2)} \left\{ \int d^3R^{(m)}\ \mathrm{Tr}\ \exp[-\beta\, H^m(\underset{\sim}{R}^{(m)})\ ] \right\} , \tag{3.27}$$

and $L_m^{(2)}$ selects m-molecule linked graphs with two external interactions.

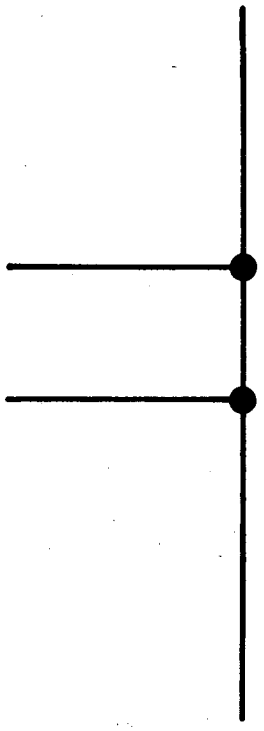

MU-22683

Fig. 1.

IV. THE SINGLE-MOLECULE POLARIZABILITY

As an introduction to our study of m-molecule graphs, we consider here the simple case $m = 1$, i.e., the single-molecule graph, shown in Fig. 1. The contribution to the polarization (Eq. 3.26) is

$$\underset{\sim}{P}_1(\underset{\sim}{R}) \equiv \theta\, \delta\, F_1^{(2)} / \delta\, \underset{\sim}{E}_0(\underset{\sim}{R}) \quad , \tag{4.1}$$

with

$$F_1^{(2)} = (z/\gamma)\, L^{(2)} \left\{ \int d^3R_1 \, \mathrm{Tr} \exp[-\beta\, H^1(\underset{\sim}{R}_1)] \right\} \quad . \tag{4.2}$$

The one-molecule Hamiltonian is

$$H^1(\underset{\sim}{R}_1) = h_1 + V_1(\underset{\sim}{R}_1) \; , \tag{4.3}$$

with

$$V_1(\underset{\sim}{R}_1) = - \underset{\sim}{p}_1 \cdot \underset{\sim}{E}_0(\underset{\sim}{R}_1) \; . \tag{4.4}$$

Following I, we introduce the Laplace transform,

$$F_1^{(2)} = (z/\gamma) \int d^3R_1 \, L^{(2)} \left\{ \mathrm{Tr}\, (2\pi\, i)^{-1} \int dw\, e^{-\beta w} [w - H^1(\underset{\sim}{R}_1)]^{-1} \right\} \quad , \tag{4.5}$$

and expand the factor $[w - H^1]^{-1}$ in V_1, keeping only the term with two factors of V_1 :

$$F_1^{(2)} = (z/\gamma) \int d^3R_1 \, \mathrm{Tr}\, (2\pi\, i)^{-1} \int dw\, e^{-\beta w} (w - h_1)^{-1} V_1 (w - h_1)^{-1} V_1 (w - h_1)^{-1} \; . \tag{4.6}$$

We note the identity

$$\mathrm{Tr}(w - h_1)^{-1} V_1 (w - h_1)^{-1} V_1 (W - h_1)^{-1} = - \frac{1}{2} \mathrm{Tr} \frac{d}{dw} \left\{ (w - h_1)^{-1} V_1 (w - h_1)^{-1} V_1 \right\} , \tag{4.7}$$

substitute into Eq. (4.6), and integrate by parts to obtain

$$F_1^{(2)} = -\frac{1}{2}\beta(z/\gamma)\int d^3R_1\, \mathrm{Tr}(2\pi i)^{-1}\int dw\, e^{-\beta w}(w-h_1)^{-1}V_1(w-h_1)^{-1}V_1 \,. \tag{4.8}$$

This expression differs from Eq. (4.6) by the extra factor $(-\frac{1}{2}\beta)$ and one less factor $(w - h_1)^{-1}$.

We substitute the explicit form of V_1 (Eq. 4.4) and write this as

$$F_1^{(2)} = \frac{1}{2}\beta z \int d^3R_1\, \underset{\sim}{E}_0(\underset{\sim}{R}_1)\cdot \underset{\sim}{\alpha}_1 \cdot \underset{\sim}{E}_0(\underset{\sim}{R}_1) \,, \tag{4.9}$$

where

$$\underset{\sim}{\alpha}_1 \equiv -\gamma^{-1}\,\mathrm{Tr}\,(2\pi i)^{-1}\int dw\, e^{-\beta w}(w-h_1)^{-1}\underset{\sim}{p}_1(w-h_1)^{-1}\underset{\sim}{p}_1 \tag{4.10}$$

is the molecular polarizability. From Eq. (4.1) the polarization is, to this order,

$$\underset{\sim}{P}_1(\underset{\sim}{R}) = z\,\underset{\sim}{\alpha}_1\cdot\underset{\sim}{E}_0(\underset{\sim}{R}) \,. \tag{4.11}$$

In the low-density limit that the contribution of $m > 1$ may be neglected, the activity z reduces[5] to the density n, and we have the elementary result

$$\underset{\sim}{P}(\underset{\sim}{R}) = n\,\underset{\sim}{\alpha}_1\cdot\underset{\sim}{E}_0(\underset{\sim}{R}) \,. \tag{4.12}$$

Let us express $\underset{\sim}{\alpha}_1$ in terms of molecular matrix elements and eigenvalues. Introducing the eigenstates of h_1 in Eq. (4.10), we have

$$\underset{\sim}{\alpha}_1 = -\gamma^{-1}\sum_{\lambda\lambda'}(2\pi i)^{-1}\int dw\, e^{-\beta w}(w-e)^{-1}(w-e')^{-1} \times \langle\lambda|p_1|\lambda'\rangle\langle\lambda'|p_1|\lambda\rangle \,. \tag{4.13}$$

We assume, for simplicity, that the states are nondegenerate; because of Eq. (2.12), there are then only simple poles, yielding

$$\underset{\sim}{\alpha}_1 = -\gamma^{-1} \sum_{\lambda\lambda'} (e' - e)^{-1} [\exp(-\beta e') - \exp(-\beta e)] \langle\lambda \mid \underset{\sim}{p}_1 \mid \lambda'\rangle\langle\lambda' \mid \underset{\sim}{p}_1 \mid \lambda\rangle \tag{4.14a}$$

$$= 2\gamma^{-1} \Sigma_\lambda e^{-\beta e} \Sigma_{\lambda'} (e' - e)^{-1}\langle\lambda \mid \underset{\sim}{p}_1 \mid \lambda'\rangle\langle\lambda' \mid \underset{\sim}{p}_1 \mid \lambda\rangle . \tag{4.14b}$$

Because of the isotropy of h_1 and the hermiticity of p_1, this becomes

$$\underset{\sim}{\alpha}_1 = \alpha_1(\theta) \underset{\sim}{I} , \tag{4.15}$$

with

$$\alpha_1(\theta) = 2\gamma^{-1} \Sigma_\lambda e^{-\beta e} \Sigma_{\lambda'} (e' - e)^{-1} |\langle\lambda \mid p_{1z} \mid \lambda'\rangle|^2$$

$$= \gamma^{-1} \Sigma_\lambda e^{-\beta e} \alpha_1(\lambda) \tag{4.16}$$

and

$$\alpha_1(\lambda) = 2 \Sigma_{\lambda'} (e' - e)^{-1} |\langle\lambda \mid p_{1z} \mid \lambda'\rangle|^2 . \tag{4.17}$$

Equation (4.17) is the well-known formula for the polarizability of a system in a given state, and (4.16) is its statistical mean.

The classical polarizability of a polar molecule may be obtained from Eq. (4.14a) by assuming that $\langle\lambda \mid \underset{\sim}{p}_1 \mid \lambda'\rangle$ is nonvanishing only for states differing in energy by an amount much less than the temperature. We can then write

$$(e' - e)^{-1} [\exp(-\beta e') - \exp(-\beta e)] = \frac{d}{de} e^{-\beta e}$$

$$= -\beta e^{-\beta e} ,$$

so that Eq. (4.14a) becomes

$$\underset{\sim}{\alpha}_1 = \gamma^{-1} \beta \sum_{\lambda\lambda'} e^{-\beta e} \langle \lambda \mid \underset{\sim}{p}_1 \mid \lambda' \rangle \langle \lambda' \mid \underset{\sim}{p}_1 \mid \lambda \rangle$$

$$= \gamma^{-1} \beta \sum_{\lambda} e^{-\beta e} \langle \lambda \mid \underset{\sim}{p}_1 \underset{\sim}{p}_1 \mid \lambda \rangle$$

$$= \beta \langle \underset{\sim}{p}_1 \underset{\sim}{p}_1 \rangle \quad ,$$

or

$$\alpha_1(\theta) = \frac{1}{3} \operatorname{Sp} \underset{\sim}{\alpha}_1 = \frac{1}{3} \beta \langle p_1^{\,2} \rangle \quad , \tag{4.18}$$

the well-known classical formula. For further discussion of $\underset{\sim}{\alpha}_1$, one can refer to the treatise of Van Vleck.[15]

V. SIMPLE CHAINS

In this section we consider the contribution of a special class of graphs, to be denoted as "simple chains." We define a simple chain as an m-molecule linked graph (with two external interactions) in which each molecule has two and only two interactions, and for which electron exchange is neglected. Figure 2 illustrates a simple chain for $m = 3$. Let F_m^{sc} denote the contributions of <u>simple chains</u> to $F_m^{(2)}$. (Note that $F_1^{sc} \equiv F_1^{(2)}$.) Then F_m^{sc} is given by Eq. (3.27), with $L_m^{(2)}$ replaced by L_m^{sc}, which selects all simple chains.

The m molecules of the chain may be ordered in $\frac{1}{2}(m!)$ different ways, for $m > 1$. (The factor $\frac{1}{2}$ arises from the fact that a given chain order from left to right is not different from the same order from right to left.) Hence we may set $L_m^{sc} = \frac{1}{2}(m!)\, L_m^{osc}$, where the latter operator selects chains whose molecules are <u>ordered</u> $1,\cdots,m$ from left to right. Thus Eq. (3.27) becomes

$$F_m^{sc} = \frac{1}{2}(z/\gamma)^m L_m^{osc} \left\{ \int d^3R^{(m)} \operatorname{Tr} \exp[-\beta H^m(\underset{\sim}{R}^{(m)})] \right\} . \tag{5.1}$$

We follow the method of I in developing the perturbation expansion for Eq. (5.1):

$$\exp[-\beta H^m(\underset{\sim}{R}^{(m)})] = (2\pi i)^{-1} \int dW e^{-\beta W} [W - H^m(\underset{\sim}{R}^{(m)})]^{-1} , \tag{5.2}$$

$$L_m^{osc} \left\{ [W - H^m(\underset{\sim}{R}^{(m)})]^{-1} \right\} = \Sigma_P (W - K^m)^{-1} V_\mu (W - K^m)^{-1} V_\nu \cdots V_\sigma (W - K^m)^{-1} . \tag{5.3}$$

In this expression K^m is the sum of the internal Hamiltonians of the m molecules, and the V's represent the set of $(m + 1)$ different interactions of the molecules in the simple chain: V_1, V_{12}, $V_{23}, \cdots, V_{m-1,m}$, V_m. The

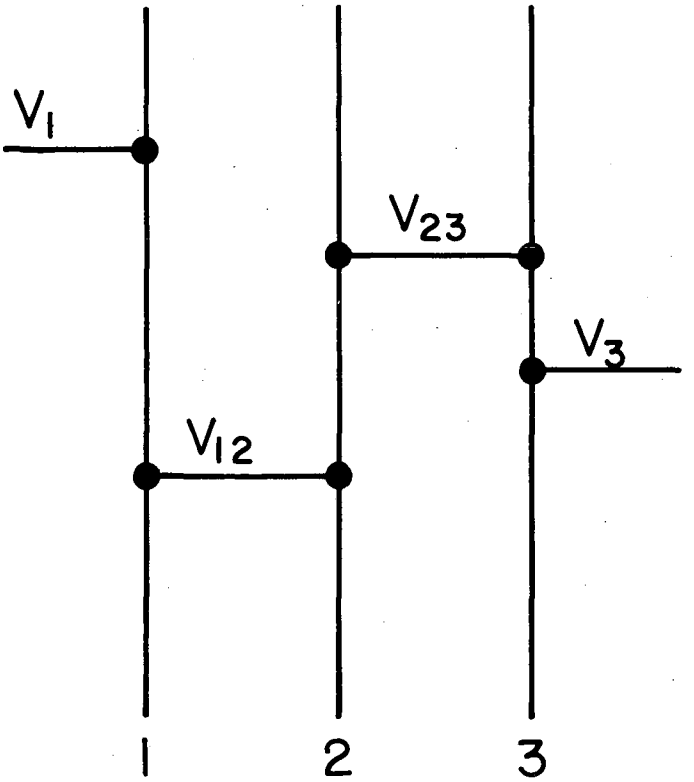

MU-22684

Fig. 2.

sum is over the $(m + 1)!$ different "chronological orders" of these interactions. We speak of the lowest interaction on the graph as being the "earliest," and place it on the right in Eq. (5.3). For example, the term of Eq. (5.3) representing Fig. 2 has the V's in the order V_1, V_{23}, V_3, V_{12} from left to right in Eq. (5.3), or from top to bottom or "latest" to "earliest" in Fig. 2.

For a given term (or graph) of Eq. (5.3), we perform a partial sum over graphs differing from it only by a cyclic permutation of the V's. Such a graph is shown in Fig. 3. With Σ_c representing the sum over cyclic permutations, we have

$$\mathrm{Tr}\, \Sigma_c (W - K^m)^{-1} V_\mu (W - K^m)^{-1} V_\nu \cdots V_\sigma (W - K^m)^{-1}$$
$$= - \frac{d}{dW} \mathrm{Tr}\, V_\mu (W - K^m)^{-1} V_\nu \cdots V_\sigma (W - K^m)^{-1} , \tag{5.4}$$

analogous to Eq. (4.7). We then insert Eqs. (5.2) and (5.3) into (5.2), use (5.4), and integrate by parts:

$$F_m^{sc} = - \frac{1}{2} \beta (z/r)^m \int d^3R^{(m)} \mathrm{Tr} (2\pi i)^{-1} \int dW e^{-\beta W} \Sigma'_P V_\mu \cdots V_\sigma (W - K^m)^{-1} , \tag{5.5}$$

where the primed summation is over <u>noncyclic</u> permutations of the V's.

Because of the trace operation, each term of the summand may be cyclically permuted so that V_{12} stands on the left, as in Fig. 3. The expression then becomes

$$F_m^{sc} = - \frac{1}{2} \beta (z/r)^m \int d^3R^{(m)} \mathrm{Tr}\, V_{12} (2\pi i)^{-1} \int dW e^{-\beta W} \Sigma_P (W - K^m)^{-1} V_\mu \cdots V_\sigma (W - K^m)^{-1}, \tag{5.6}$$

with the sum over <u>all</u> permutations of the V's exclusive of V_{12}.

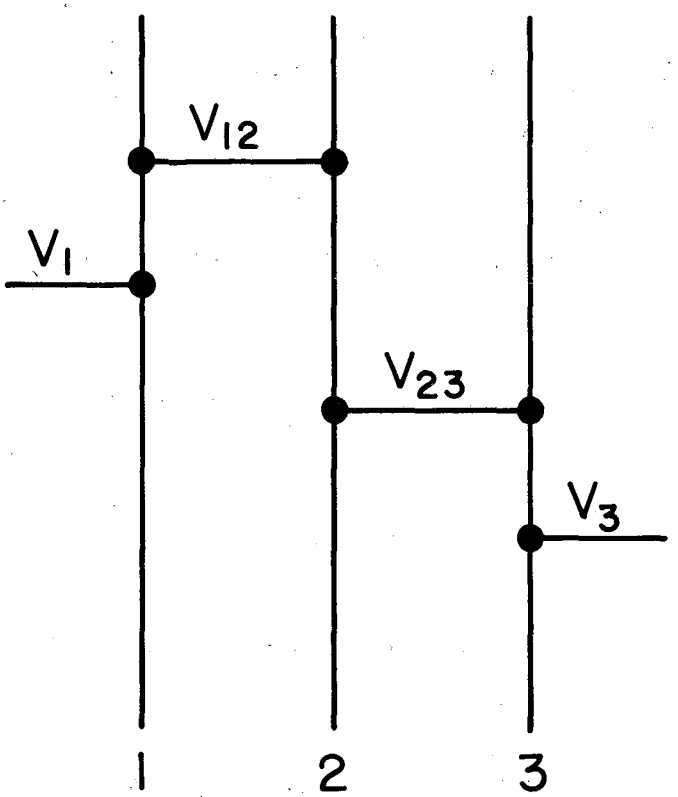

MU-22685

Fig. 3.

The summand now represents an unlinked graph, between different initial and final states (see Fig. 4), and so is subject to the Hugenholtz theorem (Appendix). By Eq. (A.1), we have

$$(2\pi\, i)^{-1} \int dW\, e^{-\beta W}\, \Sigma''_P (W - K^m)^{-1}\, V_\mu \cdots V_\sigma (W - K^m)^{-1}$$

$$= (2\pi\, i)^{-1} \int dW\, e^{-\beta W} (W - K^{m-1})^{-1}\, V_\mu \cdots V_\sigma (W - K^{m-1})^{-1}$$

$$\times\, (2\pi\, i)^{-1} \int dw\, e^{-\beta w} (w - h_1)^{-1}\, V_1 (w - h_1)^{-1} \,. \tag{5.7}$$

The first factor on the right side has a particular order of V's exclusive of V_{12} and V_1, while the left side has the same order of these V's, but sums over all positions of V_1 among them. In Eq. (5.6) one must still sum over all permutations of these V's:

$$F_m^{\,sc} = -\frac{1}{2}\, \beta (z/\gamma)^m \int d^3R^{(m)}\, \mathrm{Tr}\, V_{12} (2\pi\, i)^{-1} \int dW e^{-\beta W}$$

$$\times\, \Sigma_P [(W - K^{m-1})^{-1}\, V_\mu \cdots V_\sigma (W - K^{m-1})^{-1}]$$

$$\times\, (2\pi\, i)^{-1} \int dw e^{-\beta w} (w - h_1)^{-1}\, V_1 (w - h_1)^{-1} \,. \tag{5.8}$$

The contribution of $F_m^{\,sc}$ to the polarization is (see Eq. 3.26),

$$\underset{\sim}{P}_m^{\,sc}(\underset{\sim}{R}) \equiv \theta\delta\, F_m^{\,sc} / \delta\, \underset{\sim}{E}_0(\underset{\sim}{R}) \,. \tag{5.9}$$

Now $\underset{\sim}{E}_0$ appears in $F_m^{\,sc}$ only through $V_m(\underset{\sim}{R}_m)$ and $V_1(\underset{\sim}{R}_1)$ (see Eq. 2.10). Since V_1 appears explicitly in expression (5.8), we may perform the differentiation of (5.9) with respect to V_1 only, and multiply by 2 to take account of V_m:

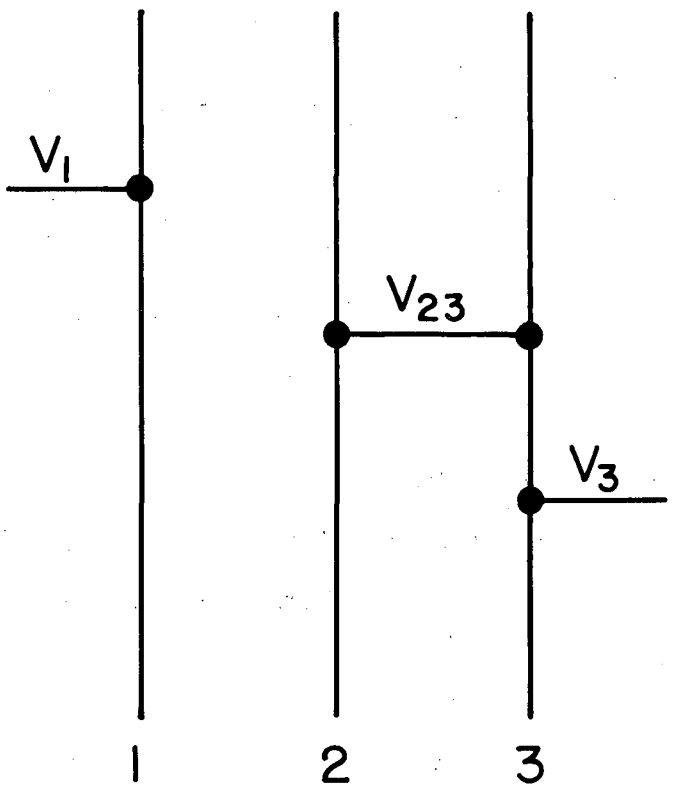

MU-22686

Fig. 4 .

$$\underset{\sim}{P}_m^{sc}(\underset{\sim}{R}) = (z/\gamma)^m \int d^3R^{(m-1)} \, \mathrm{Tr}\, V_{12}(\underset{\sim}{R}, \underset{\sim}{R}_2)(2\pi\, i)^{-1} \int dW\, e^{-\beta W}\, \Sigma_P[\ldots]$$

$$(2\pi\, i)^{-1} \int dw\, e^{-\beta w}(w - h_1)^{-1}\, \underset{\sim}{p}_1(w - h_1)^{-1} \quad , \tag{5.10}$$

where [...] represents the expression in brackets of Eq. (5.8).

If we introduce $|\lambda_1\rangle$ and $|\Lambda^{(m-1)}\rangle$, the eigenstates of h_1 and K^{m-1} respectively, we may write this as

$$\underset{\sim}{P}_m^{sc}(\underset{\sim}{R}) = (z/\gamma) \sum_{\lambda_1 \lambda'_1} \underset{\sim}{p}_1(\lambda'_1, \lambda_1)\, Q_m(\underset{\sim}{R}; \lambda_1, \lambda'_1) \; , \tag{5.11}$$

with

$$\underset{\sim}{p}_1(\lambda'_1, \lambda_1) \equiv (2\pi\, i)^{-1} \int dw\, e^{-\beta w}(w - e'_1)^{-1} \langle \lambda'_1 \,|\, \underset{\sim}{p}_1 \,|\, \lambda_1 \rangle (w - e_1)^{-1}$$

$$= \langle \lambda'_1 \,|\, \underset{\sim}{p}_1 \,|\, \lambda_1 \rangle (e'_1 - e_1)^{-1} \left[\exp(-\beta e'_1) - \exp(-\beta e_1)\right] \; , \tag{5.12}$$

and

$$Q_m(\underset{\sim}{R}; \lambda_1, \lambda'_1) \equiv (z/\gamma)^{m-1} \int d^3R^{(m-1)} \sum_{\Lambda^{(m-1)}\, \Lambda'^{(m-1)}} \langle \lambda_1 \lambda_2 \,|V_{12}(\underset{\sim}{R}, \underset{\sim}{R}_2)|\, \lambda'_1 \lambda'_2 \rangle$$

$$\times\, (2\pi\, i)^{-1} \int dW\, e^{-\beta W} \langle \Lambda'^{(m-1)} \,|\, \Sigma_P[\ldots] \,|\, \Lambda^{(m-1)} \rangle$$

$$= (z/\gamma)^{m-1} \int d^3R^{(m-1)} \langle \lambda_1 \,|\, \mathrm{Tr}^{(m-1)}\, (2\pi\, i)^{-1} \int dW\, e^{-\beta W}$$

$$\times\, \Sigma'_P\, V_{12}(\underset{\sim}{R}, \underset{\sim}{R}_2)(W - K^{m-1})^{-1}\, V_\mu \ldots V_\sigma (W - K^{m-1})^{-1} |\lambda'_1\rangle \; . \tag{5.13}$$

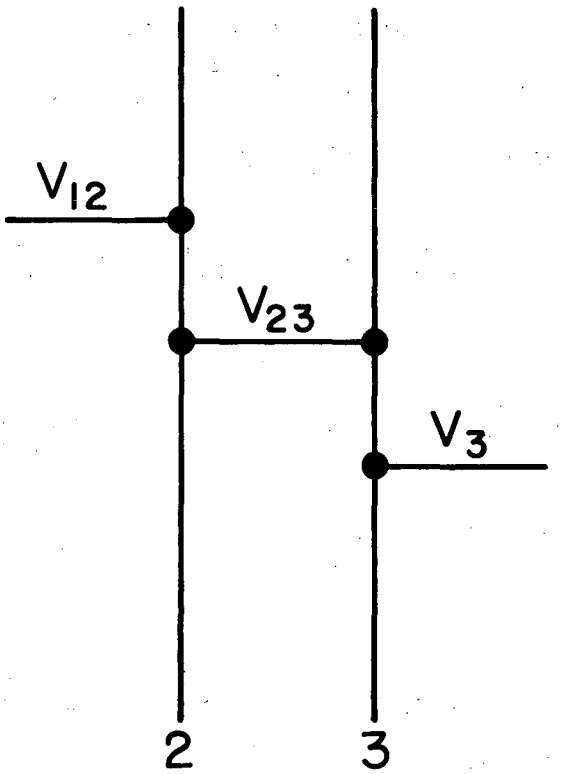

MU-22687

Fig. 5.

Note that in this last expression V_{12} has been placed under the summation sign, and accordingly noncyclic permutations of the V's acting on the last (m-1) molecules are to be taken. Figure 5 illustrates a term of Eq. (5.13), corresponding to Fig. 3.

We notice that Eq. (5.13) is analogous in form to (5.6). Hence we perform the set of operations analogous to those that led to Eq. (5.8) and ultimately to (5.11). We find then

$$Q_m(\underset{\sim}{R};\, \lambda_1,\, \lambda'_1) = (z/\gamma) \int d^3R_2 \sum_{\lambda_2\lambda'_2} \langle \lambda_1\, \lambda'_2 \mid V_{12}(\underset{\sim}{R},\, \underset{\sim}{R}_2) \mid \lambda'_1\, \lambda_2 \rangle$$

$$\times\, (e'_2 - e_2)^{-1} [\exp(-\beta\, e'_2) - \exp(-\beta\, e_2)]\, Q_{m-1}(\underset{\sim}{R}_2;\, \lambda_2,\, \lambda'_2)\ . \tag{5.14}$$

Let us now sum Eq. (5.11) over all m to obtain the simple-chain approximation to the polarization:

$$\underset{\sim}{P}^{sc}(\underset{\sim}{R}) \equiv \sum_{m=1}^{\infty} \underset{\sim}{P}_m{}^{sc}(\underset{\sim}{R}) = (z/\gamma) \sum_{\lambda_1\lambda'_1} \underset{\sim}{p}_1(\lambda'_1,\, \lambda_1)\, Q(\underset{\sim}{R};\, \lambda_1,\, \lambda'_1)\ , \tag{5.15}$$

where, from Eq. (5.14),

$$Q(\underset{\sim}{R};\, \lambda_1,\, \lambda'_1) \equiv \sum_{m=1}^{\infty} Q_m(\underset{\sim}{R};\, \lambda_1,\, \lambda'_1) \tag{5.16}$$

$$= Q_1(\underset{\sim}{R};\, \lambda_1,\, \lambda'_1) + (z/\gamma) \int d^3R' \sum_{\lambda_2\lambda'_2} \langle \lambda_1\lambda'_2 | V_{12}(\underset{\sim}{R},\, \underset{\sim}{R}') | \lambda'_1\lambda_2 \rangle$$

$$\times\, (e'_2 - e_2)^{-1} [\exp(-\beta e'_2) - \exp(-\beta e_2)]\, Q(\underset{\sim}{R}';\, \lambda_2,\, \lambda'_2)\ . \tag{5.17}$$

From Eqs. (5.11), (4.11), and (4.13), we see that Q_1 is

$$Q_1(\underset{\sim}{R};\, \lambda_1,\, \lambda'_1) = -\langle \lambda_1 \mid \underset{\sim}{p}_1 \mid \lambda'_1 \rangle \cdot \underset{\sim}{E}_0(\underset{\sim}{R}) \quad . \tag{5.18}$$

To solve the integral equation (5.17) for Q, let us divide the domain of integration into two parts,

$$\text{I} \qquad |\underset{\sim}{R} - \underset{\sim}{R}'| > R_0 \quad ,$$

$$\text{II} \qquad |\underset{\sim}{R} - \underset{\sim}{R}'| < R_0 \quad ,$$

where R_0 is large compared with molecular dimensions, but sufficiently small macroscopically so that $\underset{\sim}{E}_0$ may be considered constant over the distance R_0. In domain I we may approximate V_{12} by Eq. (2.5):

$$V_{12}(\underset{\sim}{R},\, \underset{\sim}{R}') = \underset{\sim}{p}_1 \cdot \underset{\sim}{A}(\underset{\sim}{R},\, \underset{\sim}{R}') \cdot \underset{\sim}{p}_2 \quad ; \tag{5.19}$$

while in domain II we may set

$$Q(\underset{\sim}{R}';\, \lambda_2,\, \lambda'_2) = Q(\underset{\sim}{R};\, \lambda_2,\, \lambda'_2) \quad , \tag{5.20}$$

since Q varies as slowly as $\underset{\sim}{E}_0$. Equation (5.17) now reads

$$\begin{aligned} Q(\underset{\sim}{R};\, \lambda_1,\, \lambda'_1) = &-\langle \lambda_1 | \underset{\sim}{p}_1 | \lambda'_1 \rangle \cdot \Big[\underset{\sim}{E}_0(\underset{\sim}{R}) \\ &- (z/\gamma) \int_{\text{I}} d^3R'\, \underset{\sim}{A}(\underset{\sim}{R},\, \underset{\sim}{R}') \cdot \sum_{\lambda_2 \lambda'_2} Q(\underset{\sim}{R}';\lambda_2,\lambda'_2)\, \underset{\sim}{p}_2(\lambda'_2,\lambda_2) \Big] \\ &+ (z/\gamma) \sum_{\lambda_2 \lambda'_2} Q(\underset{\sim}{R};\lambda_2,\lambda'_2)(e'_2 - e_2)^{-1} \left[\exp(-\beta e'_2) - \exp(-\beta e_2)\right] \\ &\times \langle \lambda_1 \lambda'_2 \mid \int_{\text{II}} d^3R'\, V_{12}(\underset{\sim}{R},\, \underset{\sim}{R}') \mid \lambda'_1 \lambda_2 \rangle \quad . \end{aligned} \tag{5.21}$$

The second term in the first square bracket of (5.21) is, by Eq. (5.15),

$$- \int_I d^3R' \, \underset{\sim}{\Lambda}(\underset{\sim}{R}, \underset{\sim}{R}') \cdot \underset{\sim}{P}^{sc}(\underset{\sim}{R}') \quad . \tag{5.22}$$

We proceed to the evaluation of the integral over domain II; by Eq. (2.3), it is

$$\begin{aligned} \int_{II} d^3R' \, V_{12}(\underset{\sim}{R}, \underset{\sim}{R}') &= \int_{II} d^3R' \int d^3r \int d^3r' \, \epsilon_1(\underset{\sim}{r})\epsilon_2(\underset{\sim}{r}') \, |\underset{\sim}{R} - \underset{\sim}{R}' + \underset{\sim}{r} - \underset{\sim}{r}'|^{-1} \\ &= \int d^3r \int d^3r' \, \epsilon_1(\underset{\sim}{r}) \, \epsilon_2(\underset{\sim}{r}') \, \frac{4}{3} \pi \, \underset{\sim}{r} \cdot \underset{\sim}{r}' \\ &= \frac{4}{3} \pi \, \underset{\sim}{p}_1 \cdot \underset{\sim}{p}_2 \quad . \end{aligned} \tag{5.23}$$

Equation (5.21) thus becomes, with the help of (5.15),

$$\begin{aligned} Q(\underset{\sim}{R}; \lambda_1, \lambda'_1) = - \langle \lambda_1 \mid \underset{\sim}{p}_1 \mid \lambda'_1 \rangle \cdot \Big[& \underset{\sim}{E}_0(\underset{\sim}{R}) \\ & - \int_I d^3R' \, \underset{\sim}{\Lambda}(\underset{\sim}{R}, \underset{\sim}{R}') \cdot \underset{\sim}{P}^{sc}(\underset{\sim}{R}') - \frac{4}{3} \pi \, \underset{\sim}{P}^{sc}(\underset{\sim}{R}) \Big] , \end{aligned} \tag{5.24}$$

or with Eq. (3.5),

$$Q(\underset{\sim}{R}; \lambda_1, \lambda'_1) = - \langle \lambda_1 \mid \underset{\sim}{p}_1 \mid \lambda'_1 \rangle \cdot \underset{\sim}{E}^{sc}(\underset{\sim}{R}) \quad . \tag{5.25}$$

We substitute into (5.16) and obtain, with the help of Eq. (4.14),

$$\underset{\sim}{P}^{sc}(\underset{\sim}{R}) = z \, \underset{\sim}{\alpha}_1 \cdot \underset{\sim}{E}^{sc}(\underset{\sim}{R}) \quad . \tag{5.26}$$

In the simple-chain approximation, the susceptibility, defined by Eq. (3.19), is thus

$$\chi^{sc} = z \, \alpha_1 \quad , \tag{5.27}$$

and the dielectric constant

$$K \equiv 1 + 4\pi \chi \tag{5.28}$$

is

$$K^{sc} = 1 + 4\pi z \alpha_1 . \tag{5.29}$$

It would be better to refer to the simple-chain summation not as an approximation, but as an introduction to the calculation of the next section. We shall see there that the assumption of only one interaction between two distant molecules is a good approximation; but is is clear that for two molecules which are close together this is a poor approximation. A simple model due to Kirkwood[16] allows a considerable improvement. We reduce R_0 to molecular size, continue to use Eq. (5.19) in domain I, and drop the integration over domain II by invoking the hard-sphere model for the molecules, to prevent overlap. The last term of Eq. (5.24) is thus dropped, and (5.26) becomes

$$\underset{\sim}{P}^{sc}(\underset{\sim}{R}) = z \underset{\sim}{\alpha}_1 \cdot [\underset{\sim}{E}^{sc}(\underset{\sim}{R}) + \frac{4\pi}{3} \underset{\sim}{P}^{sc}(\underset{\sim}{R})] . \tag{5.30}$$

If we now set $z = n$ (low density), we obtain the Clausius-Mossotti formula,

$$\frac{K - 1}{K + 2} = \frac{4\pi}{3} n \alpha_1 . \tag{5.31}$$

VI. THE CLUSTER-CHAIN EXPANSION

In this section we define the type of graph called a "cluster chain," and calculate the contribution of all cluster chains to the polarization. We then show that under certain conditions all other graphs make a negligible contribution, so that the cluster-chain approximation is a satisfactory one.

For any graph of m molecules, we hold the positions of the molecular centers of mass fixed. If the distance between two interacting molecules is less than R_0 (where R_0 is small macroscopically, but large microscopically), the molecules are said to belong to the same cluster. Any interaction between two molecules in different clusters must therefore be over a distance greater than R_0. Note that two noninteracting molecules in different clusters may be nearer than R_0, and that two molecules in the same cluster <u>may</u> be farther apart than R_0. A cluster chain is now defined as a graph for which the topology of the interactions between clusters is analogous to that of a simple chain. We may number the clusters $\delta = \mathrm{I}, \mathrm{II}, \cdots, M$, so that δ and $\delta + 1$ have one and only one interaction, and I and M each interact once with the external field. See Fig. 6 for a three-cluster chain analogous to the simple chain of Fig. 3.

Consider an m-molecule M-cluster chain, with m_δ molecules in cluster δ. Let us assign the molecules to the numbered clusters, and multiply by $m!/\prod_\delta m_\delta!$, the number of such assignments. Then holding M fixed, we sum over all values of m_δ from one to infinity (thus summing over m). In this process we count each graph twice (as with simple chains), therefore we must correct with a factor $\frac{1}{2}$. Equations (3.26) and (3.27) can thus be replaced by

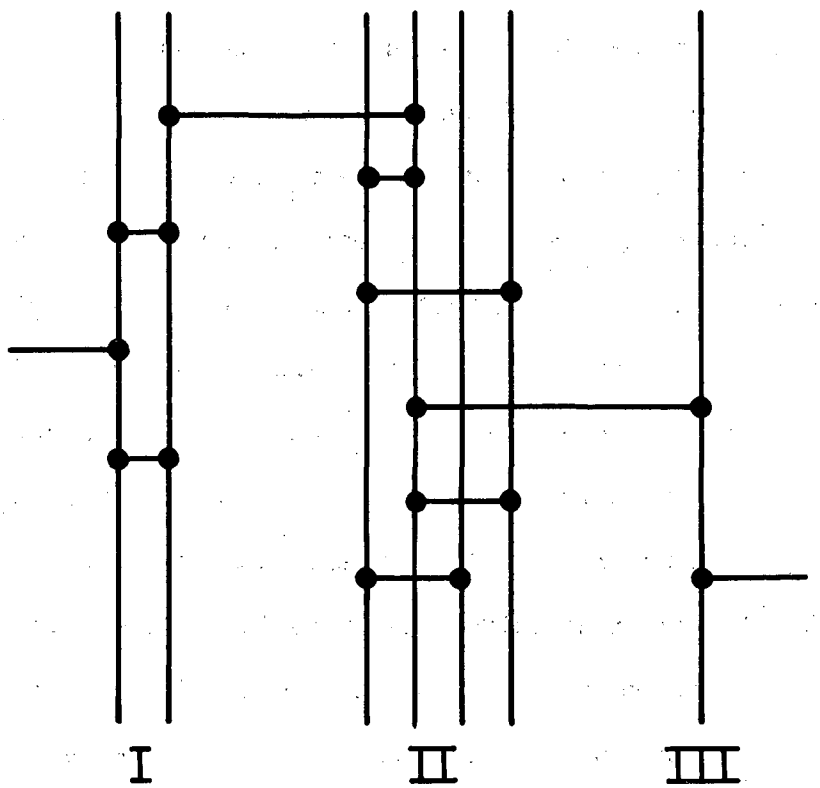

MU-22688

Fig. 6.

$$\underset{\sim}{P}(\underset{\sim}{R}) = \sum_{M=1}^{\infty} \underset{\sim}{P}^{M}(\underset{\sim}{R}) \quad , \tag{6.1}$$

$$\underset{\sim}{P}^{M}(\underset{\sim}{R}) = \theta \, \delta F^{M}/\delta \, \underset{\sim}{E}_{0}(\underset{\sim}{R}) \quad , \tag{6.2}$$

$$F^{M} = \frac{1}{2} \sum_{\{m_\delta\}} \frac{z^{m}}{\gamma^{m} \prod_\delta m_\delta!} \int d^3R^{(m)} \; L^{(m_\delta)} \; \mathrm{Tr} \exp[-\beta \, H^{m}(\underset{\sim}{R}^{(m)})] \; . \tag{6.3}$$

In expression (6.3), we have $m = \Sigma_\delta \, m_\delta$, and $L^{(m_\delta)}$ selects cluster chains characterized by the set $\{m_\delta\}$.

The m-molecule Hamiltonian H^m for an M-cluster chain may be written as

$$H^{m} = K^{(M)} + V^{(M)} \quad , \tag{6.4}$$

where

$$K^{(M)} = \Sigma_\delta \, H_\delta \tag{6.5}$$

is the sum of the cluster Hamiltonians H_δ, and

$$V^{(M)} = V_I + \sum_{\delta=1}^{M-1} V_{\delta,\delta+1} + V_M \tag{6.6}$$

includes the intercluster interactions $V_{\delta,\delta+1}$ and the external interactions V_I and V_M. Thus the external interaction V_I is

$$V_I = - \sum_{i}^{I} \underset{\sim}{p}_i \cdot \underset{\sim}{E}_0(\underset{\sim}{R}_i) \quad , \tag{6.7}$$

and the intercluster interaction $V_{I\,II}$ is

$$V_{I\,II} = \sum_{j}^{I} \sum_{k}^{II} \underset{\sim}{p}_j \cdot \underset{\sim}{\Lambda}(\underset{\sim}{R}_j, \underset{\sim}{R}_k) \cdot \underset{\sim}{p}_k \quad , \tag{6.8}$$

since $R_{jk} > R_0$ if molecules j and k interact. The cluster Hamiltonian H_δ includes the internal Hamiltonians of the m_δ molecules and the intracluster

interactions of these molecules. The trace in Eq. (6.3) is to be taken over properly antisymmetrized cluster states, but electron exchange between clusters may be neglected because of their separation.[17] The integration over molecular positions in (6.3) is subject to the restrictions of the definition.

The development of Eq. (6.3) is now completely analogous to that of Eq. (5.1). We may thus immediately write down the analogue of Eq. (5.8):

$$F^M = -\frac{1}{2}\beta \sum_{\{m_\delta\}} \frac{z^m}{\gamma^m \prod_\delta m_\delta!} \int d^3R^{(m)}\, L^{(m_\delta)}\, \mathrm{Tr} \Big\{ V_{I\,II}$$

$$\times \left[(2\pi\, i)^{-1} \int dW e^{-\beta W} \sum_P (W - K^{(M-1)})^{-1} V_\mu \cdots V_\sigma (W - K^{(M-1)})^{-1}\right]$$

$$\times (2\pi\, i)^{-1} \int dw\, e^{-\beta w} (w - H_I)^{-1} V_I (w - H_I)^{-1} \Big\} \quad . \tag{6.9}$$

To find the polarization (Eq. 6.2), we differentiate only with respect to the $\underset{\sim}{E}_0$ in V_I (see Eq. 6.7) and multiply by 2:

$$\underset{\sim}{P}^M(\underset{\sim}{R}) = \sum_{\{m_\delta\}} \frac{z^m}{\gamma^m \prod_\delta m_\delta!} \int d^3R^{(m)}\, L^{(m_\delta)}\, \mathrm{Tr}$$

$$\times \Big\{ (2\pi\, i)^{-1} \int dw\, e^{-\beta w} (w - H_I)^{-1} \sum_i^I \underset{\sim}{p}_i\, \delta(\underset{\sim}{R} - \underset{\sim}{R}_i)(w - H_I)^{-1}$$

$$\times \sum_j^I \sum_k^{II} \underset{\sim}{p}_j \cdot \underset{\sim}{\Lambda}(\underset{\sim}{R}_j, \underset{\sim}{R}_k) \cdot \underset{\sim}{p}_k\, [\cdots] \Big\} \quad . \tag{6.10}$$

We have used Eq. (6.8) for $V_{I\,II}$, and the symbol $[\ldots]$ for the square-bracketed quantity in Eq. (6.9).

Let us extract from Eq. (6.10) the quantities referring to cluster I, performing the integration over all molecular positions except those of

molecules i and j. For i = j we have (setting $m_I \equiv m$ here)

$$\underset{\sim}{\beta}^{(1)} \equiv \sum_{m=1}^{\infty} \frac{z^m}{\gamma^m\, m!}\, m \int d^3R^{(m-1)}\, L\, \mathrm{Tr}(2\pi\, i)^{-1} \int dw\, e^{-\beta w}(w - H^m)^{-1} \underset{\sim}{p}_1 (w - H^m)^{-1} \underset{\sim}{p}_1 \quad , \tag{6.11}$$

since the m terms in the sum over i are equivalent. For $i \neq j$ we have

$$\underset{\sim}{\beta}^{(2)}(\underset{\sim}{R}_1, \underset{\sim}{R}_2) \equiv \sum_{m=1}^{\infty} \frac{z^m}{\gamma^m\, m!}\, m(m-1) \int d^3R^{(m-2)}\, L\, \mathrm{Tr}\, (2\pi\, i)^{-1}$$

$$\times \int dw\, e^{-\beta w}\, (w - H^m)^{-1}\, \underset{\sim}{p}_1\, (w - H^m)^{-1}\, \underset{\sim}{p}_2 \; . \tag{6.12}$$

The spatial integration is subject to the restrictions on molecular positions implied in the definition of a cluster.

The polarization (Eq. 6.10) is thus

$$\underset{\sim}{P}^M(\underset{\sim}{R}) = \int d^3R'\, \underset{\sim}{\beta}(\underset{\sim}{R}, \underset{\sim}{R}') \cdot \sum_{\{m_\delta\}} \frac{z^m}{\gamma^m \prod_\delta m_\delta!} \int d^3R^{(m)}\, L^{(m_\delta)}$$

$$\times \sum_k^{II} \underset{\sim}{\Lambda}(\underset{\sim}{R}', \underset{\sim}{R}_k) \cdot \mathrm{Tr}\, \{\underset{\sim}{p}_k \left[\cdots\right] \} \quad , \tag{6.13}$$

where

$$\underset{\sim}{\beta}(\underset{\sim}{R}, \underset{\sim}{R}') \equiv \underset{\sim}{\beta}^{(1)}\, \delta(\underset{\sim}{R} - \underset{\sim}{R}') + \underset{\sim}{\beta}^{(2)}(\underset{\sim}{R}, \underset{\sim}{R}') \quad . \tag{6.14}$$

In Eq. (6.13), the quantities m, m_δ, $L^{(m_\delta)}$ refer to the (M - 1)-cluster chain exclusive of the first cluster.

An expression for $\underset{\sim}{P}^{M-1}$ is obtainable from the analogue of Eq. (5.6) if V_{II} is chosen to stand outside the sum. We then have

$$\underset{\sim}{P}^{M-1}(\underset{\sim}{R}) = \sum_{\{m_\delta\}} \frac{z^m}{\gamma^m \prod_\delta m_\delta!} \int d^3R^{(m)} L^{(m_\delta)} \mathrm{Tr}\{ \prod_k \sum_k \underset{\sim}{p}_k \, \delta(\underset{\sim}{R} - \underset{\sim}{R}_k)[\ldots] \} \quad . \tag{6.15}$$

Upon comparing this with Eq. (6.13), we find

$$\underset{\sim}{P}^M(\underset{\sim}{R}) = \int d^3R' \, \underset{\sim}{\beta}(\underset{\sim}{R}, \underset{\sim}{R}') \cdot \int d^3R'' \, \underset{\sim}{\Lambda}(\underset{\sim}{R}', \underset{\sim}{R}'') \cdot \underset{\sim}{P}^{M-1}(\underset{\sim}{R}'') \quad . \tag{6.16}$$

For $M = 1$, on the other hand, we easily obtain

$$\underset{\sim}{P}^1(\underset{\sim}{R}) = - \int d^3R' \, \underset{\sim}{\beta}(\underset{\sim}{R}, \underset{\sim}{R}') \cdot \underset{\sim}{E}_0(\underset{\sim}{R}') \quad . \tag{6.17}$$

We thus find, for the sum of all cluster chains (Eq. 6.1),

$$\underset{\sim}{P}(\underset{\sim}{R}) = - \int d^3R' \, \underset{\sim}{\beta}(\underset{\sim}{R}, \underset{\sim}{R}') \cdot [\underset{\sim}{E}_0(\underset{\sim}{R}') - \int d^3R'' \, \underset{\sim}{\Lambda}(\underset{\sim}{R}', \underset{\sim}{R}'') \cdot \underset{\sim}{P}(\underset{\sim}{R}'')] \quad . \tag{6.18}$$

From the cluster-chain definition, the integration over $\underset{\sim}{R}''$ excludes a sphere of radius R_0 about $\underset{\sim}{R}'$ (see Eq. 6.10 for the original appearance of $\underset{\sim}{\Lambda}$). Hence, by Eq. (3.5), this relation is

$$\underset{\sim}{P}(\underset{\sim}{R}) = - \int d^3R' \, \underset{\sim}{\beta}(\underset{\sim}{R}, \underset{\sim}{R}') \cdot [\underset{\sim}{E}(\underset{\sim}{R}') + \frac{4}{3}\pi \, \underset{\sim}{P}(\underset{\sim}{R}')] \quad . \tag{6.19}$$

Equations (3.5) and (6.19) provide coupled integral equations from which the polarization $\underset{\sim}{P}(\underset{\sim}{R})$ and the electric field $\underset{\sim}{E}(\underset{\sim}{R})$ may be determined from the external field $\underset{\sim}{E}_0(\underset{\sim}{R})$. When the field vary slowly over microscopic dimensions, these equations may be simplified. Let us assume that the density is sufficiently low (and hence the activity also) that the sum over m in Eqs. (6.11) and (6.12) can be truncated at a finite m. From the cluster definition, $\underset{\sim}{\beta}(\underset{\sim}{R}, \underset{\sim}{R}')$ is then defined only for $|\underset{\sim}{R} - \underset{\sim}{R}'|$ less than some finite multiple of R_0, thus restricting the $\underset{\sim}{R}'$ integration in Eq. (6.19). We choose R_0 so small that $\underset{\sim}{E}$ (and therefore $\underset{\sim}{P}$) are effectively constant over the $\underset{\sim}{R}'$ integration, and obtain

$$\underset{\sim}{P}(\underset{\sim}{R}) = \underset{\sim}{A} \cdot [\underset{\sim}{E}(\underset{\sim}{R}) + \frac{4\pi}{3} \underset{\sim}{P}(\underset{\sim}{R})] , \tag{6.20}$$

where ,

$$\underset{\sim}{A} \equiv -\int d^3R' \, \underset{\sim}{\beta}(\underset{\sim}{R}, \underset{\sim}{R}') . \tag{6.21}$$

Since $\underset{\sim}{A}$ is a constant tensor, it must be scalar:

$$\underset{\sim}{A} = A \underset{\sim}{I} , \tag{6.22}$$

where

$$A = -\frac{1}{3} \, \mathrm{Sp} \int d^3R' \, \underset{\sim}{\beta}(\underset{\sim}{R}, \underset{\sim}{R}') , \tag{6.23}$$

so that

$$\underset{\sim}{P}(\underset{\sim}{R}) = A [\underset{\sim}{E}(\underset{\sim}{R}) + \frac{4\pi}{3} \underset{\sim}{P}(\underset{\sim}{R})] . \tag{6.24}$$

This is of the form of (Eq. 3.19), with

$$\chi = \frac{A}{1 - \frac{4}{3}\pi A} . \tag{6.25}$$

If we introduce the dielectric constant K ,

$$K \equiv 1 + 4\pi\chi , \tag{6.26}$$

we find that $\frac{4}{3}\pi A$ equals the Clausius-Mossotti expression:

$$\frac{K - 1}{K + 2} = \frac{4}{3}\pi A . \tag{6.27}$$

Referring to Eqs. (6.21), (6.14), (6.11), and (6.12), we see that

$$\underset{\sim}{A} = \sum_{m=1}^{\infty} z^m \, \underset{\sim}{\alpha}'_m , \tag{6.28}$$

where

$$\underset{\sim}{\alpha}'_m \equiv -\frac{1}{\gamma^m\, m!} \int d^3R^{(m-1)}\, L\, \mathrm{Tr}(2\pi\, i)^{-1} \int dw\, e^{-\beta w}(w - H^m)^{-1}\underset{\sim}{p}^{(m)}(w - H^m)^{-1}\underset{\sim}{p}^{(m)}, \tag{6.29}$$

is the (temperature-dependent) polarizability of an m-molecule linked cluster; $\underset{\sim}{p}^{(m)}$ is the total dipole moment of the cluster. To obtain an expansion in powers of the mean molecular density $n \equiv N/\mathcal{V}$, we use Eq. (3.42) of paper I,

$$n = \sum_{m=1}^{\infty} m\, z^m\, b_m \;, \tag{6.30}$$

where b_m is the cluster integral defined by Eq. (3.39) of I, and $b_1 = 1$. As stated above, for consistency X should be evaluated in the zero-field limit; hence in Eq. (6.30) both z and b_m refer to the zero-field case, or $r = 0$ in the notation of Sec. V of I. Let us solve Eq. (6.30) for $z(n)$:

$$z = n - 2\, b_2\, n^2 + \cdots \;, \tag{6.31}$$

and substitute into Eq. (6.28). We then find

$$\underset{\sim}{A} = \sum_{m=1}^{\infty} n^m\, \underset{\sim}{\alpha}_m \;, \tag{6.32}$$

with $\underset{\sim}{\alpha}_1 \equiv \underset{\sim}{\alpha}'_1$, the single-molecule polarizability of Sec. IV,

$$\underset{\sim}{\alpha}_2 \equiv \underset{\sim}{\alpha}'_2 - 2b_2\, \underset{\sim}{\alpha}_1 \;, \tag{6.33}$$

and so forth. Since the $\underset{\sim}{\alpha}'_m$ and $\underset{\sim}{\alpha}_m$ are all scalar tensors, we may write Eq. (6.27) as

$$\frac{K - 1}{K + 2} = \frac{4}{3}\, \pi \sum_{m=1}^{\infty} n^m\, \alpha_m \tag{6.34}$$

$$= \frac{4}{3}\, \pi(n\, \alpha_1 + n^2\, \alpha_2 + \cdots) \;. \tag{6.35}$$

The Clausius-Mossotti function is thus expressed as a power series in density;[10] the first term of the series yields the conventional Clausius-Mossotti formula, while the α_2 term gives the first correction to it. In a subsequent paper we shall discuss the evaluation of α_2 from Eqs. (6.33) and (6.29), and shall relate it to the work of previous investigators.[11]

We must now inquire into the validity of the cluster-chain approximation. It is clear from the result (Eq. 6.34) that it is a low-density approximation, and can be valid only if the series (6.34) converges. We therefore do not expect it to be valid for a condensed state.

Let us now consider the contribution of a graph, such as shown in Fig. 7, which is not a cluster chain. Let us first select the set of clusters I, II, III, whose successive linkages (with the external field and with one another) are those of a chain, except that successive clusters may be multiply linked. Each additional linkage ($V_{I\ II}$ in this case) introduces an additional factor of the order of

$$< V_{I\ II} >/\Delta E \quad , \tag{6.36}$$

where $< V_{I\ II} >$ is a matrix element of the order of

$$< p_I > < p_{II} >/(R_{I\ II})^3 \ , \tag{6.37}$$

with $< p_I >$, $< p_{II} >$ representing dipole moment matrix elements, $R_{I\ II}$ the separation of the molecules undergoing the additional interaction, and ΔE a typical energy difference. Since the polarizability α_1 is of the order of $< p >^2/\Delta E$, and since $R_{I\ II}$ must be greater than R_0, the additional factor (6.36) is of the order of

$$\alpha_1 / R_0^{\ 3} \ . \tag{6.38}$$

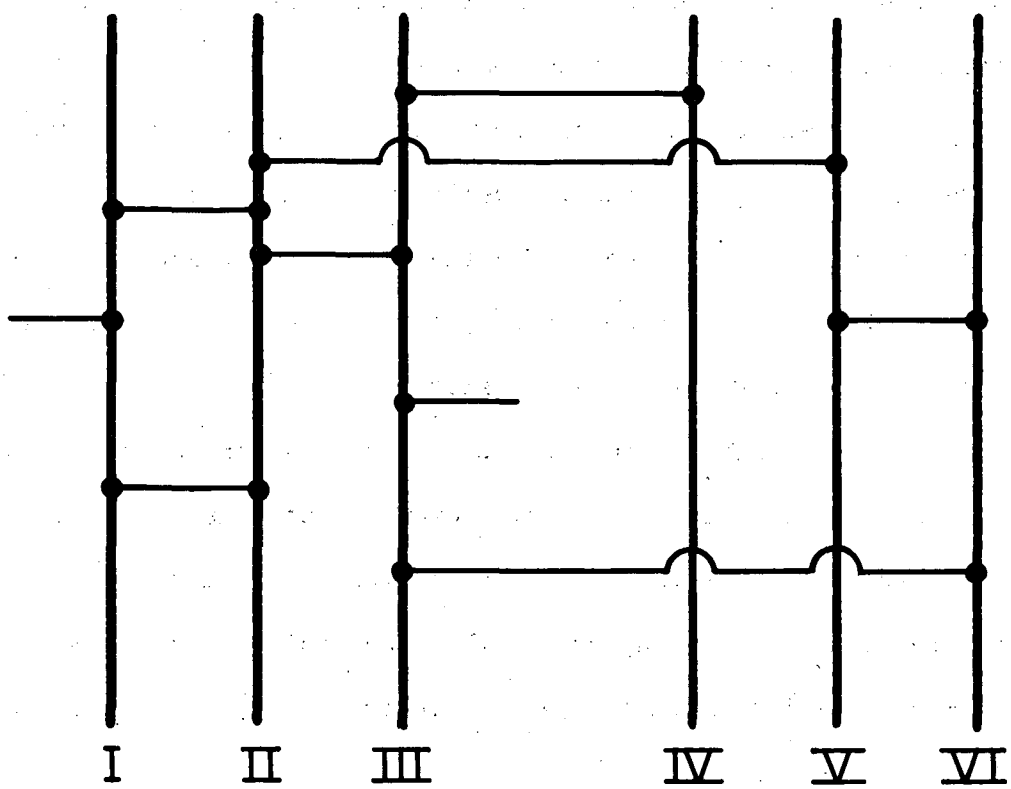

MU-22689

Fig. 7

Thus, in order to neglect a graph having multiple linkage, it is necessary to choose R_0 sufficiently large that (6.38) is very small. Since α_1 is typically of the order of a molecular volume,[18] this should in general be possible if the field $\underset{\sim}{E}_0$ does not vary significantly over molecular dimensions.

The other clusters IV, V, VI are connected to the chain I-II-III either by one linkage (IV) or by two or more (V, VI). In the latter case, the number of linkages exceeds the number of additional clusters, thus introducing a number of factors (6.36) equal to the excess. The argument above then makes the relative contribution negligible. In the former case, the single linkage couples the cluster(s) concerned through its mean dipole moment in the absence of a field; by the isotropy of the cluster Hamiltonian, such a graph then vanishes.

ACKNOWLEDGMENT

The authors acknowledge the benefit of discussions with Dr. Alfred E. Glassgold.

APPENDIX

We wish to prove the Hugenholtz theorem in a form suitable for use in Section V. Consider two uncoupled systems, 1 and 2, with the respective Hamiltonians

$$H_\alpha = K_\alpha + V_\alpha \qquad \text{for } \alpha = 1, 2 .$$

The total Hamiltonian is

$$H = K + V ,$$

with $K = \Sigma_\alpha K_\alpha$, and $V = \Sigma_\alpha V_\alpha$.

Because the two systems do not interact, their Hamiltonians commute, and we have

$$e^{-\beta H} = \Sigma_\alpha \; e^{-\beta H_\alpha} ,$$

or

$$(2\pi\, i)^{-1} \int dW\, e^{-\beta W}(W - H)^{-1} = \prod_\alpha (2\pi\, i)^{-1} \int dw_\alpha\, e^{-\beta w_\alpha}(w_\alpha - H_\alpha)^{-1} . \tag{A.1}$$

We expand $(w_\alpha - H_\alpha)^{-1}$ as in paper I, and consider a particular graph for each α, corresponding to a single term in the expansion. Such a graph is characterized by the order in which the component terms (interactions) of V_α appear. For each graph of 1 and 2, there are a number of (unlinked) graphs of the composite system, in which the order of interactions is maintained within each part α, but with different order of the V_α interactions relative to the V_β interactions. The corresponding terms in the expansion of Eq. (A.1) express this relation algebraically.

REFERENCES AND FOOTNOTES

1. E. W. Montroll and J. C. Ward, Phys. Fluids 1, 55 (1958).
2. C. Bloch and D. de Dominicis, Nuclear Phys. 7, 459 (1958).
3. T. D. Lee and C. N. Yang, Phys. Rev. 113, 1165 (1959).
4. A. E. Glassgold, W. Heckrotte, and K. M. Watson, Phys. Rev. 115, 1374 (1959).
5. A. N. Kaufman and K. M. Watson (submitted to Phys. Fluids), "Linked-Diagram Expansion for the Equation of State of a Gas of Molecules."
6. For derivations of this expansion, see (e.g.) Mayer and Mayer, Statistical Mechanics (John Wiley and Sons, New York, 1940); T. L. Hill, Statistical Mechanics (McGraw-Hill Book Company, New York, 1956); and the review paper by J. DeBoer, Repts. Progr. in Phys. 12, 305 (1949).
7. S. Ono, J. Chem. Phys. 19, 504 (1951); J. E. Kilpatrick, J. Chem. Phys. 21, 274 (1953).
8. A reading of paper I is helpful but not essential to an understanding of this paper.
9. We plan to discuss the nonlinear effects in a future paper.
10. A formal expansion of the same type as Eq. (6.34) has previously been derived by T. Hill, J. Chem. Phys. 28, 61 (1958), using the Ono-Kilpatrick approach.
11. For a full discussion of previous work on this subject, see W. Fuller Brown, Dielectrics, in Encyclopedia of Physics, Vol. XVII (Springer-Verlag, Berlin, 1956), and G. Wyllie, Theory of Polarization and Absorption in Dielectrics: An Introductory Survey, in Progress in Dielectrics, Vol. II, Birks and Schulman, Eds. (John Wiley and Sons, New York, 1960).
12. Precise definitions of $\underset{\sim}{E}$ and of the polarization are given in Section III.

13. W. F. Brown, op. cit. (Ref. 11), Sec. 2.

14. A. N. Kaufman (submitted to Am. J. Phys.).

15. J. H. Van Vleck, The Theory of Electric and Magnetic Susceptibilities (Oxford University Press, London, 1932).

16. J. G. Kirkwood, J. Chem. Phys. 4, 592 (1936).

17. A precise formulation of the application of the Pauli principle to all the electrons of the graph may be based on the considerations of paper I. It is shown there that proper consistent use of the linkage operator L allows one to limit antisymmetrization to the electrons of a cluster (as defined in I). Similar considerations may be applied here.

18. For a polar gas, α_1 may be a thousand times the molecular volume, but even so a suitable R_0 can usually be chosen.

FIGURE CAPTIONS

1. The single-molecule graph.
2. A simple chain for $m = 3$.
3. A simple chain differing from that of Fig. 2 by a cyclic permutation of the interactions.
4. The simple chain of Fig. 3, unlinked by the removal of V_{12}.
5. The simple chain of Fig. 3, less molecule 1.
6. A cluster chain analogous to the simple chain of Fig. 3.
7. A graph which is not a cluster chain.

This report was prepared as an account of Government sponsored work. Neither the United States, nor the Commission, nor any person acting on behalf of the Commission:

A. Makes any warranty or representation, expressed or implied, with respect to the accuracy, completeness, or usefulness of the information contained in this report, or that the use of any information, apparatus, method, or process disclosed in this report may not infringe privately owned rights; or

B. Assumes any liabilities with respect to the use of, or for damages resulting from the use of any information, apparatus, method, or process disclosed in this report.

As used in the above, "person acting on behalf of the Commission" includes any employee or contractor of the Commission, or employee of such contractor, to the extent that such employee or contractor of the Commission, or employee of such contractor prepares, disseminates, or provides access to, any information pursuant to his employment or contract with the Commission, or his employment with such contractor.