UCRL -9608

UNIVERSITY OF CALIFORNIA

Ernest O. Lawrence Radiation Laboratory

TWO-WEEK LOAN COPY

This is a Library Circulating Copy which may be borrowed for two weeks. For a personal retention copy, call Tech. Info. Division, Ext. 5545

BERKELEY, CALIFORNIA

DISCLAIMER

This document was prepared as an account of work sponsored by the United States Government. While this document is believed to contain correct information, neither the United States Government nor any agency thereof, nor the Regents of the University of California, nor any of their employees, makes any warranty, express or implied, or assumes any legal responsibility for the accuracy, completeness, or usefulness of any information, apparatus, product, or process disclosed, or represents that its use would not infringe privately owned rights. Reference herein to any specific commercial product, process, or service by its trade name, trademark, manufacturer, or otherwise, does not necessarily constitute or imply its endorsement, recommendation, or favoring by the United States Government or any agency thereof, or the Regents of the University of California. The views and opinions of authors expressed herein do not necessarily state or reflect those of the United States Government or any agency thereof or the Regents of the University of California.

UCRL-9608

UNIVERSITY OF CALIFORNIA
Lawrence Radiation Laboratory
Berkeley, California
Contract No. W-7405-eng-48

MEASUREMENTS OF E2 INTERNAL CONVERSION COEFFICIENTS. A DISCUSSION OF THE INTERNAL-EXTERNAL CONVERSION METHOD

Sölve Hultberg, Daniel J. Horen and Jack M. Hollander

April 1961

MEASUREMENTS OF E2 INTERNAL CONVERSION COEFFICIENTS. A DISCUSSION OF THE INTERNAL-EXTERNAL CONVERSION METHOD

Sölve Hultberg, Daniel J. Horen and Jack M. Hollander

Lawrence Radiation Laboratory
University of California
Berkeley, California

April, 1961

ABSTRACT

Conversion coefficients of M1, M4 and E2 transitions have been studied by using the internal-external conversion (IEC) method. Agreement with theory is generally found except in the case of the ϵ_K of the 412 keV E2 transition from Au^{198}. Here the experimental value was observed to be about 18% lower than the theoretical values of Rose and of Sliv. The IEC method is discussed.

MEASUREMENTS OF E2 INTERNAL CONVERSION COEFFICIENTS A DISCUSSION OF THE INTERNAL-EXTERNAL CONVERSION METHOD

Sölve Hultberg[x], Daniel J. Horen and Jack M. Hollander

Lawrence Radiation Laboratory
University of California
Berkeley, California

April 1961

I. INTRODUCTION

Recently a considerable effort has been devoted to the experimental study of internal conversion coefficients of E2 transitions, particularly those proceeding from the 2+ to 0+ states in even-even nuclei. Because these transitions are pure it is possible to make a detailed comparison of the experimental results with the calculations of Rose and of Sliv [1]. The theoretical calculations take into account the influence of finite nuclear size by the application of certain corrections which are much smaller for E2 than for M1 conversion coefficients [1]. However, some evidence has been found that significant deviations occur between theoretical and experimental E2 conversion coefficients, deviations amounting to some 10 - 25 % [2]. Most of the experimental values have been obtained by the peak-to-beta-spectrum (or PBS) method or by the internal-external (or IEC) technique. However, the experimental situation at present is not very clear, partly because of a lack of sufficient statistical material and in some cases because of a fairly large spread of the measured values. This spread is particularly evident in the well-known case of the 412 keV E2 transition [2] which follows the decay of Au^{198}. Here the experimental results range from agreement with theory to figures that are about 20 % low. Thus de Vries has reported an ϵ_K value measured by the PBS method that is about 20 % lower than theory while Wapstra et al [2b] in earlier measurements by the same method found a value 10 % low. A very recent measurement at Uppsala [6] by a coincidence technique appears to show agreement with theory. The IEC method, on the other hand, has thus far given values that are consistently about 20 % low (de Vries [2d], Frey et al [2e] and the present paper).

---

[x] On leave from the Nobel Institute of Physics, Stockholm 50, Sweden

It is, of course, important to clarify the situation in general and in the 412 keV (Au^{198}) case in particular. For this reason we have re-measured the Au^{198} conversion coefficient, and others. We have used the IEC method, both because of its experimental simplicity and freedom from assumptions about the decay scheme and also because it is important to demonstrate clearly that the results obtained by this method are independent of the particular instrument used in the measurements.

2. EXPERIMENTAL TECHNIQUE

The technique for measuring internal conversion coefficients absolutely with the IEC method has been described elsewhere [3, 4] and need not be repeated here.

The instrument used is a flat, double-focusing beta-ray spectrometer of 25 cm mean radius which employs as a detector a flow-type methane proportional counter. To accommodate the activity and the photoelectric converter a special holder has been constructed which permits the location of the converter to be shifted from outside the spectrometer. Thus, by operating a shaft the converter could be placed either in front of the source or in a position where it did not obstruct the beam of internal conversion electrons emitted from the source. The arrangement is shown in Fig. 1.

We used two rectangular uranium converters of dimensions 5.0 x 9.8 mm^2 (both) and of surface thicknesses 2.19 ± 0.02 and 0.75 ± 0.02 mg/cm^2. The following activities were studied:

Y^{87} (388,483), Cs^{137} (662), Au^{198} (412), Ir^{192} (296, 308, 317)

Figures inside parentheses give energies in KeV of the gamma rays investigated. The yttrium source was liquid-deposited, the cesium was vaporized and the gold source was chemically plated. The iridium was painted onto an aluminum backing as inactive material, and a rectangular piece, 3 x 8 mm^2, was then cut out and sent for activation. This method has the advantage of very easy handling after activation and it worked satisfactorily for the iridium experiments.

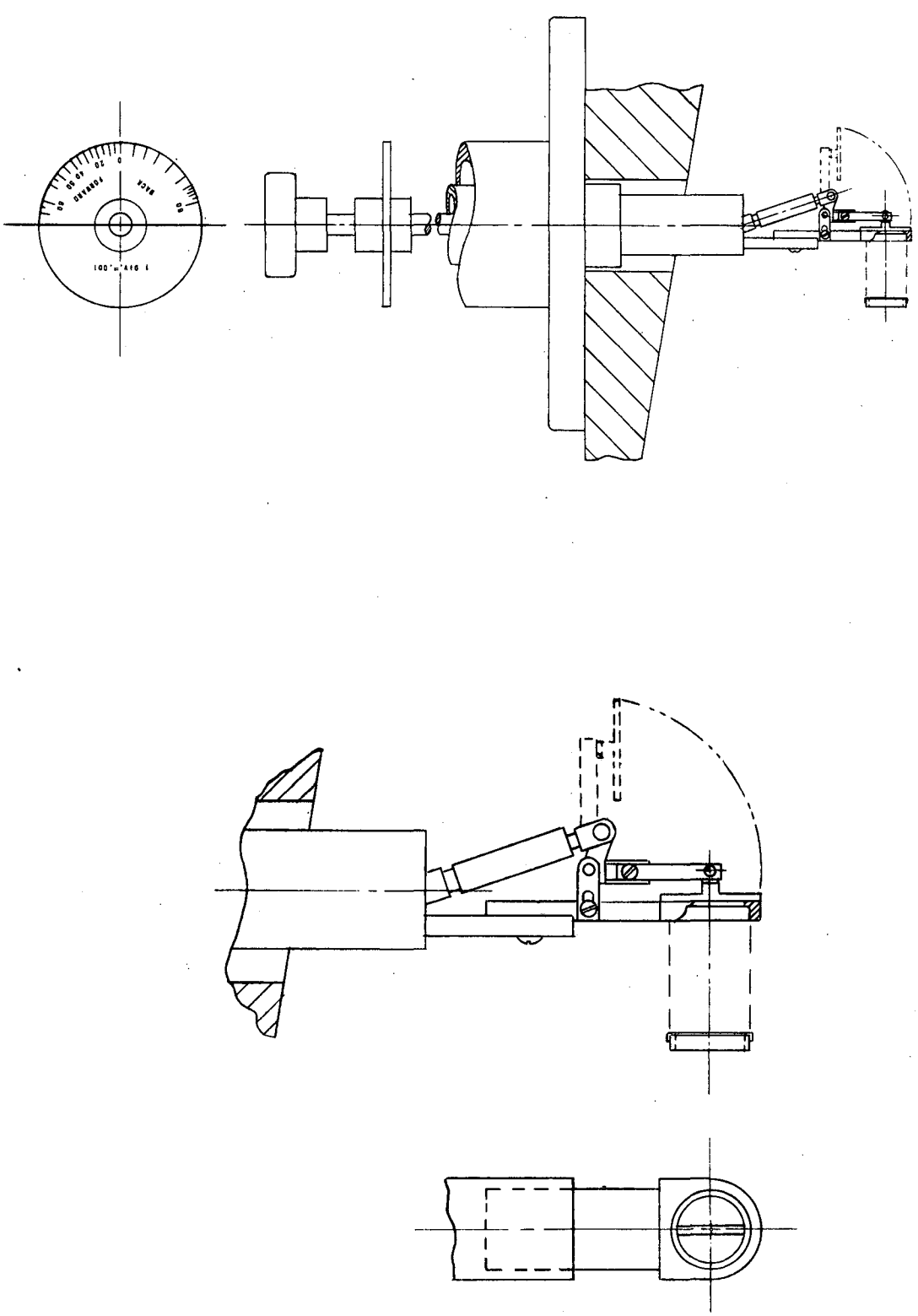

Fig. 1. Sourceholder-converter Assembly.

3. RESULTS

The results obtained for the measured K internal conversion coefficients ϵ_K are summarized in Table 1.

Table 1

Isotope	Energy of transition keV	Source Size mm^2	Multi-polarity	Experimental ϵ_K	Theoretical ϵ_K
$_{38}Sr^{87}$	388	4x10	M4	0.165 ± 0.015	0.17
	483	4x10	M1	0.00255 ± 0.00015	0.00257
$_{56}Ba^{137}$	662	1x9	M4	0.093 ± 0.006[x]	0.093
$_{80}Hg^{198}$	412	2x4	E2[xx]	0.025 ± 0.001	0.030
$_{78}Pt^{192}$	296	3x8	E2	0.063 ± 0.01	0.062
	308	3x8	E2	0.054 ± 0.006	0.057
	317	3x8	E2[xx]	0.049 ± 0.003	0.054

[x] Using an experimental τ_K [8]. [xx] 2+ ⟶ 0+ transition.

The experimental results given in Table 1 represent in each case an average over four to five measurements. A contribution of 1 - 3 % from the uncertainty in the f factor was assumed in calculating the total error of an individual ϵ_K.

For the calculation of the internal conversion coefficients we used the expression [3, 4]

$$\epsilon_K = \frac{A_\beta}{A_\gamma} \tau_K f d k b \quad . \qquad (1)$$

where: A_β and A_γ are the intensities per unit momentum interval of the internal and external conversion lines, respectively. τ_K is the absolute

photoelectric cross-section (in barns) for the K-shell of the converter. f is a correction factor which depends upon the photoelectric angular distribution and the particular values of the parameters which describe the sizes of the source and the converter and their relative distance. The appropriate f values were obtained by use of the BESK service (cf. Appendix to this paper). k is the ratio of intensities of sources used to measure the external and internal conversion lines. In these experiments k = 1 because the same source was employed for both measurements. b is a dimension factor which is a constant for a given converter material.

4. DISCUSSION

As a check on the experimental set-up we measured the internal conversion coefficient of the 662 keV M4 transition following the decay of Cs^{137} and the result was in good agreement with theory and with earlier measurements of both the PBS and the IEC type [2d, 3, 5]. It is gratifying to notice that here the results obtained by the two methods are in good agreement. Also, a high degree of consistency of the IEC method is indicated by the fact that the same value for β_4 was obtained at three different laboratories with instruments of different designs.

At present only the 412 keV E2 transition from Au^{198} decay presents a controversial case. The conversion coefficient from the PBS method varies from 10 to 20 % lower than theory, that from a recent coincidence measurement agrees with theory while the IEC method has given results that are consistently about 20 % low (references 2d, 2e and the present paper).

In assessing the over-all accuracy and reliability of the IEC method, it may be worthwhile to discuss here some features of Eq. (1) upon which the method is based. The quantities A_β, A_γ, d and k require no particular comments as their evaluation is straightforward. With regard to the measurements of the 412 keV E2 conversion coefficient of Au^{198} it is worth noting that the converters used at Vanderbilt University [2e] and at the Radiation Laboratory were prepared from the same original piece. The d values were determined by two independent methods of analysis [3] which agreed to within 1 - 3 %. Therefore it does not seem very likely that a systematic error in d should exceed 1 or 2 % in these cases. The investigations in Amsterdam [2d] were performed with gold converters made by stacking thin gold

foils; for lack of appropriate angular distribution information for Au it was assumed that $f_{Au} \sim f_U$. This assumption was evidently supported by the measurement of the M4 conversion coefficient of the 662 keV transition in Ba^{137}, which yielded the value 0.093 (compare with Table 1). However, care should be taken since it is not known to what extent this assumption is justified over a large energy range, particularly near the K-shell threshold. It is therefore important to extend the angular measurements of the photoeffect to converters other than uranium. The Z-dependence of the angular distributions is probably not very strong and by making due allowance for the difference in K-shell binding energies it should be possible to use the f_U factors for converters other than uranium over limited energy ranges.

A determination of the k factor can be avoided by using the same source for both internal and external conversion, as was done in the measurements reported here.

We must then consider the factors τ and f, the determination of which is by no means straightforward. As is immediately seen from Eq. (1) the "integrated" or "total" photoelectric cross-section τ (for a particular shell) forms the basis for our determination of the internal conversion coefficient and thus it is of prime importance to have the accuracy of available τ values firmly established. Theoretical work on the photoeffect is now being pursued[x] and there is hope that new and more accurate tables of photoelectric cross-sections will soon become available. At present the best values of τ_K are those which can be inferred from the NBS Circular No. 583, but there the uncertainty is stated only in very general terms and so it is impossible to assign the true error to a given value. At a few specific energies (i.e. at 412, 662, 1332 keV and some others) there are experimental results on τ_a (a refers to the whole atom) where specific errors are given and from which τ_K can be inferred, knowing the ratio τ_a/τ_K [4]. The quoted errors, however, are often surprisingly small considering that τ_a has been inferred indirectly in most instances. In gamma-ray absorption experiments, for example, the photoelectric cross-section τ_a is obtained by subtracting from the total

---

[x] At Stanford (R. Pratt), Stockholm (B. Nagel, P.O. Olsson, S. Hultberg), Bucarest (M. Gavrila), Trondheim (H. Olsen).

gamma-ray attenuation the contributions from all other processes, i.e. coherent and incoherent scattering, pair production and possibly other small effects. The difficulties are apparent. Jones[7] finds for Pb that the calculated τ_a value (using $\tau_a/\tau_K = 5/4$) at 412 keV is about 10% lower than the experimental value; Seemann[17] observes for Pb that theory is 7 % low at 511 keV; while Colgate[8] finds for U that theory is about 3 % higher than experiment at 412 keV (cf also ref. 4). It is conceivable that the tabulated values for τ_K might ultimately be subjected to changes in accordance with these findings but since the tables appear to have been prepared in a consistent manner and since the difference in Z between Pb and U is fairly small this would not seem probable. One would expect rather that systematic errors in the calculated values are similar in magnitude for Pb and U and are in the same direction. Also, one tends to doubt seriously error limits of less than 1 % which are sometimes claimed for absorption experiments.

Bearing in mind that the tables of τ_a have been compiled only from diagrams where three different theoretical approaches have been joined smoothly with help of experimental results it is obvious that some improvement is very much needed if the photoelectric corss-sections are to be used for accurate determinations of internal conversion coefficients. In some investigations based on the IEC method an error of 5 - 6 % was tentatively assigned to τ_K[3, 9] for lack of a more accurate estimate. However, very recently the situation has improved somewhat in that preliminary calculations[18] for Z = 92 have shown τ_K, as derived from the NBS Circular 583, to be good to within 1 - 2 %, at least below 500 keV. This is surprisingly good considering the difficulties associated with the preparation of the tables. For instance, at 412 keV the value $\tau_K = 59.4$ barns/atom was obtained for uranium with the electronic computer BESK[18] and from the NBS Circular 583 one interpolates a value in the range 59.3 - 59.6, showing very good agreement. This also lends support to the experimental ratio $\tau_a/\tau_K = 1.26$[4] since this ratio enables us to calculate τ_K from Colgate's experiments which gave only τ_a. The result is $\tau_{K,\ Colgate} = 58.1$, agreeing well with theory.

While τ represents the "total" photoelectric cross-section, the quantity τf can be regarded as the "effective" cross-section, i.e. the photoelectric efficiency that applies directly to the actual experimental set-up. The factor f is thus a quantity that generally differs from 1; in many practical cases f turns out to take values in the region $0.8 < f < 1.3$. In the case of

a rectangular converter and a radioactive source of no extension (point source) f is given by [4)]

$$f = \frac{\frac{2}{\pi}\int_0^{\theta_2} J(\theta+\Delta)\,\mathrm{tg}\,\theta\left[\arcsin\frac{\mathrm{tg}\,\theta_0}{\mathrm{tg}\,\theta} - \arccos\frac{\mathrm{tg}\,\theta_1}{\mathrm{tg}\,\theta}\right] e^{-\mu g/\cos\theta}\,d\theta}{\int_0^{\pi} J(\theta)\sin\theta\,d\theta}$$

where $J(\theta)$ denotes the photoelectric angular function (differential cross-section) for unpolarized incident photons. Definition of the various symbols is given in ref. 4.

In the discussion of the attainable accuracy in f, as calculated from Eq. (2), the important question is: how do we find the appropriate angular function $J(\theta)$ to be used in a given case? There are in principle two possible modes of approach:

a) to start from a theoretically computed $J(\theta)$

b) to start from an experimentally obtained distribution $J_e(\theta)$.

Since practical converters always give a certain amount of scattering the theorist (alternative a) would have to re-shape his angular function to include information about scattering; this is rather difficult if present theories for multiple scattering are to be used. In this respect the experimentalist (alternative b) is more fortunate since he can have the correct information on scattering included in his experiment by utilizing the same piece of converter material in his investigation of the angular function and in his study of photolines for inferring intensities of gamma rays. Of course, as in the theoretical case there still remains the question about the dependence of the angular function on the converter thickness (dependence on "scattering" distortion). Finally, the experimentalist encounters a new difficulty which does not concern the theorist, the so-called "geometric" distortion of the angular function due to the finite lateral extension of the converter [4)]. However, as can reasonably be expected from the general shape of photoelectric angular distributions, careful experiments [4, 10, 11)] have shown that within certain limits the expression (2) is quite insensitive to the scattering and geometric distortions. These phenomena are in a sense complementary in that the scattering distortion is far more important at small energies while the reverse is true for the geometric distortion. Provided that the integration limit θ_2 is not too small calculations have actually shown in several cases that it is possible to use a theoretical

function $J(\theta)$ instead of the more appropriate $J_e(\theta)$ (the latter function should, in the ideal case, be free from geometric distortion but include correct information on scattering) to a good degree of accuracy (~ 1 %), when the energy is not too low [12]. This is largely due to the fact that the f factor is formed as a ratio between two quantities which are both affected to about the same extent by changes in the scattering and geometric distortions. The insensitivity of f with respect to geometry and scattering (assuming the converter to be thin enough for all electrons to get through without appreciable energy losses) is a fortunate circumstance as it allows, in most cases, the same set of angular functions to be applied to the calculation of f factors without regard to the particular value of d (cf Eq. 1) used in the experiment. Thus it is not necessary for each experimentalist to measure the angular functions for his particular converter. To a certain extent it is possible, however, to adjust the angular function to correspond more closely to a specified converter thickness by using the diagrams of Fig. 7 in ref. 4.

In a consideration of the f factor it is of interest to see how well general trends in the experimental angular distributions agree with available theoretical information on the photoeffect. The most striking difference between experiment and the old formula of Sauter is seen at large angles θ where experiments indicate a much stronger emission [4], in qualitative agreement with more recent theoretical investigations [13]. A quantitative comparison with theory at all angles cannot be done at present. At this time the only complete angular function for a high-Z element has been calculated for Z = 92 by Nagel and Olsson [13] at the K-shell threshold where, however, no experiments can be done. In spite of this it is very interesting to notice, from the curve of Nagel and Olsson, that the tendency of higher intensities at large angles than predicted by the Sauter formula is clearly evident even at the K-shell threshold. Thus the direction θ_m of maximum emission is found to be 97° for Z = 92, which is a shift of 7° towards larger angles as compared with the non-relativistic formula of Sauter. By extrapolation of a curve of experimental θ_m values versus energy it is found for Z = 92 that $\theta_m = 97^\circ \pm 3^\circ$ [14], in good agreement with theory. It is also found from the curve of Nagel and Olsson that the forward ($\theta = 0$) and backward ($\theta = \pi$) emissions are 1 and 7 %, respectively, again in satisfactory agreement with experimental results [4]. It should also be noticed that calculations from the experimental angular distributions of subshell ratios

such as τ_K/τ_L, $\tau_L/\tau_{M'}$, τ_a/τ_K, where M' = M+N+..., are in very good agreement with recent calculations and absorption experiments. Thus $\tau_K/\tau_L = 5.3 \pm 0.2$ and $\tau_L/\tau_{M'} = 2.6 \pm 0.15$ was obtained experimentally [4] while Pratt [19] finds 5.3 and 2.7, respectively, for energies that are large compared to the binding energy. Pratt also finds that these ratios should be energy independent, as found experimentally [4]. It was already pointed out above that $\tau_a/\tau_K = 1.26 \pm 0.01$ agrees well with absorption measurements.

According to a method given in ref. 4 the source dimensions can be taken into account in the calculation of the f factor. The source and converter are assumed to have rectangular shape. Such an assumption simplifies matters greatly and introduces no practical limitation since for flat spectrometers the rectangular shape is nearly always desired. For the calculations it is, moreover, assumed that source and converter are symmetrically positioned with respect to each other (cf Fig. 12, ref 4). The source is "decomposed" into a number of rectangular parts, each of which is small compared with the converter, so that Eq. (2) can be applied to every such part. The resulting f value will then simply be the arithmetic average of all f values computed. This method has been tested experimentally [4].

The attenuation of the gamma rays in the absorbing material between source and converter is taken into account by the exponential factor $e^{-\mu g/\cos\theta}$, cf. Eq. (2). μ is the absorption coefficient in cm^{-1} and g is the absorber thickness in cm (cf. Appendix). Self-absorption in the source material can also be taken into account by putting in appropriate values for μ and g.

The expression (1) has now been used in the evaluation of relative gamma-ray intensities and internal conversion coefficients in several cases by different workers in different laboratories [2d, 2e, 3, 9, 12, 15]. It is gratifying to notice that the results are apparently independent of the particular instrument used and that there is general agreement with results obtained from other methods. We may, for instance, point to the agreement to within 10 % over a large energy range between the IEC method and the Compton analysis for the relative intensities of the Eu^{152} gamma rays [16].

When comparing the IEC method with other techniques in the discussion of internal conversion coefficients it is of interest to mention two particular cases where the true ϵ values seem to have been established to within about

5 % through a large number of independent determinations. The two cases are the 279 keV M1 transition in Tl^{203} and the 662 keV M4 transition in Ba^{137}. The application of the IEC method to these transitions has given results that are in complete agreement with earlier determinations [3, 12]. Apart from the obvious necessity of extensive tabulations of results from more accurate calculations of photoelectric cross-sections the whole situation would seem satisfactory were it not for the above-mentioned deviations in the case of the 412 keV E2 transition of the Au^{198} decay. It should be pointed out that the IEC results on the 412 keV transition were obtained by using 1) a GM counter and two different sources for internal and external conversion [2d], 2) A GM counter with one source, taking advantage of the short half-life [2e] and 3) a proportional counter with one source, performing all measurements in rapid succession (the present paper). The method proved to be insensitive to these modifications to within 5 %.

Until more extended calculations of photoelectric cross-sections are completed it is not possible to give results of the desired accuracy for internal conversion coefficients measured with the IEC method. In view of the above-mentioned preliminary results of new theoretical calculations for Z = 92 we would, however, not expect any future corrections of τ_K to exceed something like 5 - 10 %, even in extreme cases. We thus conclude that the ϵ_K value for the 412 keV transition in Au^{198} decay is 18 % lower than expected from the tables of Sliv and of Rose. This is in fair agreement with some earlier experiments [2b, d] but at variance with other more recent findings [6]. We are unable to explain the discrepancies present in this particular case.

One of us (S. H.) would like to express his gratitude to Professor I. Perlman for the opportunity of spending the summer (1960) with the Chemistry Division of the Radiation Laboratory. We wish also to thank Mr. A. D. Carneiro for his careful design of the source-holder and converter assembly.

5. APPENDIX

A service is available from the BESK computer in Stockholm for calculating f factors. Request forms of the type shown below may be obtained for this service either from the Nobel Institute of Physics, Stockholm 50, Sweden, or from the Chemistry Department, Lawrence Radiation Laboratory, Berkeley 4, California. In addition to what is stated on this form calculations can now also be performed for the following energies and shells for Z = 92:

103	$L_I + L_{II}$
103	L_{III}
103	$L_I + L_{II} + L_{III}$
103	M
279	K
2750	K

The energies are given in keV.

References

1) L. A. Sliv and I. Band, Tables of internal conversion coefficients, published by the Academy of Sciences of the USSR, Moscow-Leningrad 1956.
M. E. Rose, Internal Conversion Coefficients (North-Holland Publishing Co., Amsterdam; Interscience Publishers, Inc., N. Y., 1958).
L. S. Kisslinger, Phys. Rev. 114, 292 (1959).

2) a. A. H. Wapstra, G. Nijgh, N. Salomons-Grobben and L. Ornstein, Nuclear Physics 9, 538 (1958/59).
b. G. Nijgh and A. H. Wapstra, Nuclear Physics 9, 545 (1958/59).
c. F. K. McGowan and P. H. Stelson, Phys. Rev. 107, 1674 (1957).
d. C. de Vries, Nuclear Physics 18, 454 (1960).
e. W. F. Frey, J. H. Hamilton and S. Hultberg, to be published in Nuclear Physics.

3) S. Hultberg and R. Stockendal, Arkiv för fysik 14, 565 (1959).

4) S. Hultberg, Arkiv för fysik 15, 307 (1959).
5) A. H. Wapstra, Arkiv för fysik 7, 275 (1954).
6) B. G. Pettersson, J. Thun and T. R. Gerholm, Uppsala (private communication, in print in Nuclear Physics).
7) M. T. Jones, Phys. Rev. 50, 110 (1936).
8) S. A. Colgate, Phys. Rev. 87, 592 (1952).
9) R. Stockendal and S. Hultberg, Arkiv för fysik 15, 33 (1959).
10) S. Hultberg and Z. Sujkowski, Phys. Rev. Letters 3, 227 (1959).
11) Z. Sujkowski (to be published).
12) R. Stockendal, Arkiv för fysik 17, 579 (1960).
13) B. Nagel and P. O. Olsson, Arkiv för fysik 18, 29 (1960).
14) S. Hultberg, J. H. Hamilton and T. O'Connor, Nuclear Physics 22, 306 (1961).
15) C. J. Herrlander, R. Stockendal and R. K. Gupta, Arkiv för fysik 17, 315 (1960).
G. Bäckström and I. Marklund, Arkiv för fysik 17, 393 (1960).
I. Marklund, O. Nathan and O. B. Nielsen, Nuclear Physics 15, 199 (1960).
I. Marklund, B. van Nooijen and Z. Grabowski, Nuclear Physics 15, 533 (1960).
J. Kern and G. Bäckström, Nuclear Physics 19, 461 (1960).
16) O. Nathan and S. Hultberg, Nuclear Physics 10, 118 (1959).
17) K. W. Seemann, Bull. Am. Phys. Soc. 1, 198, (1956).
18) B. Nagel, P. O. Olsson and S. Hultberg, to be published.
19) R. Pratt, Phys. Rev. 119, 1619 (1960).

August 1960

Computer Service for Calculation of the Photoelectric f Factor

The form below can be filled out and sent to the "BESK Service", Nobel Institute of Physics, Stockholm 50, Sweden, for a calculation on the Swedish electronic computer BESK of the photoelectric f-factor. For the definition and use of f, see S. Hultberg and R. Stockendal, Arkiv för fysik 14, 565 (1959); S. Hultberg, Arkiv för fysik 15, 307 (1959), section H; S. Hultberg and Z. Sujkowski, Phys. Rev. Letters 3, 227 (1959). The calculations take the finite dimensions of the source into full account. This means that the source can be allowed to be larger (along one or both dimensions) than the converter. Rectangular shape is assumed for both source and converter. The calculations are based on experimentally measured photoelectric angular distributions $J(\theta)$ for uranium, but they can equally well be performed on any other $J(\theta)$, if specified numerically. The gamma-ray attenuation in the material that is usually put in between source and converter to absorb beta-rays and internal conversion electrons is taken into account correctly if the parameters g and Z_{abs} are specified below.

Each calculation results in two f-factors: f_p and f. Here f_p is the point-source value (i.e. with $c_Q=h_Q=0$) and f is the desired result for the actual source size. A comparison of f_p and f clearly shows the effect of source size ($f < f_p$). From the $J(\theta)$ functions now available for BESK calculations, f can be found as a function of energy with an overall accuracy of at least 1%.

Calculated f factors are, at present, strictly valid only for uranium as converter material. There is, however, evidence that the Z dependence of the f factor is rather weak. Also, the calculations are exact only for an infinitely thin source. However, the source thickness can easily be taken into account by averaging over calculations with different source-to-converter distances. So far the calculations apply only to the flat type spectrometer.

At present, the following $J(\theta)$ functions are available for f-factor calculations at BESK:

159 K, L_I+L_{II}, L_{III}, L; 208 K; 412 K, L, M'; 662 K, L, M';

1118 K, L, M'; 1332 K, L, M';

Here we use $L = L_I+L_{II}+L_{III}$ and M' = M+N+.... Energies are in keV. It should be observed that the calculated f factors permit obtaining ratios of photoline intensities of different shells, at the same energy. Results will be returned to the applicant usually within three weeks after receiving the application. As far as free machine time can be granted by the Swedish Board for Computing Machinery this service will be free of charge.

S. Hultberg

Tear off here.

Experiment 1		Experiment 2	
Parameters*	$J(\theta)$**	Parameters*	$J(\theta)$**
c		c	
h		h	
c_Q		c_Q	
h_Q		h_Q	
a		a	
m		m	
g		g	
Z_{abs}		Z_{abs}	

* All lengths should be given in centimeters
** $J(\theta)$ should be specified by showing energy and shell as in text above: 662 K, etc
*** Cf. Arkiv för fysik 15, 307 (1959), Fig. 12

Remarks:

Definitions: ***

c converter half width
h " " height
c_Q source " width
h_Q " " height
a source-to-converter distance
m converter-to-aperture distance
g absorber thickness
Z_{abs} Z value of absorber

Date: .....

Name: .....

.....

Address: .....

.....

.....

.....

This report was prepared as an account of Government sponsored work. Neither the United States, nor the Commission, nor any person acting on behalf of the Commission:

A. Makes any warranty or representation, expressed or implied, with respect to the accuracy, completeness, or usefulness of the information contained in this report, or that the use of any information, apparatus, method, or process disclosed in this report may not infringe privately owned rights; or

B. Assumes any liabilities with respect to the use of, or for damages resulting from the use of any information, apparatus, method, or process disclosed in this report.

As used in the above, "person acting on behalf of the Commission" includes any employee or contractor of the Commission, or employee of such contractor, to the extent that such employee or contractor of the Commission, or employee of such contractor prepares, disseminates, or provides access to, any information pursuant to his employment or contract with the Commission, or his employment with such contractor.