UCRL -9660

UNIVERSITY OF CALIFORNIA

Ernest O. Lawrence Radiation Laboratory

TWO-WEEK LOAN COPY

This is a Library Circulating Copy which may be borrowed for two weeks. For a personal retention copy, call Tech. Info. Division, Ext. 5545

BERKELEY, CALIFORNIA

DISCLAIMER

This document was prepared as an account of work sponsored by the United States Government. While this document is believed to contain correct information, neither the United States Government nor any agency thereof, nor the Regents of the University of California, nor any of their employees, makes any warranty, express or implied, or assumes any legal responsibility for the accuracy, completeness, or usefulness of any information, apparatus, product, or process disclosed, or represents that its use would not infringe privately owned rights. Reference herein to any specific commercial product, process, or service by its trade name, trademark, manufacturer, or otherwise, does not necessarily constitute or imply its endorsement, recommendation, or favoring by the United States Government or any agency thereof, or the Regents of the University of California. The views and opinions of authors expressed herein do not necessarily state or reflect those of the United States Government or any agency thereof or the Regents of the University of California.

UCRL-9660

UNIVERSITY OF CALIFORNIA

Lawrence Radiation Laboratory
Berkeley, California

Contract No. W-7405-eng-48

REMOTE PLASTIC BAG PASSOUT UNIT FOR HIGH-LEVEL RADIOCHEMICAL OPERATIONS

E. S. Fleischer, T. C. Parsons, and P. W. Howe

August 1961

REMOTE PLASTIC BAG PASSOUT UNIT FOR HIGH-LEVEL RADIOCHEMICAL OPERATIONS

E. S. Fleischer, T. C. Parsons, and P. W. Howe

Lawrence Radiation Laboratory
University of California
Berkeley, California

August 1961

ABSTRACT

This system presents a method for making remote sealed-bag passouts from a multicurie-level chemistry processing enclosure. In addition, the polyethylene bags are changed remotely without exposing contaminated surfaces while always maintaining a low leak-rate seal. Our system employs an interchange box (the Passout Box) attached to the chemistry enclosure. Integrated with the box is a hydraulically operated jack that raises and lowers the bags, and a welder-cutter for sealing them. A single master-slave manipulator teamed with the above units handles all operations.

REMOTE PLASTIC BAG PASSOUT UNIT FOR HIGH-LEVEL RADIOCHEMICAL OPERATIONS

E. S. Fleischer, T. C. Parsons, and P. W. Howe

Lawrence Radiation Laboratory
University of California
Berkeley, California

August 1961

INTRODUCTION

"The use of plastic sleeves or bags for removing contaminated objects from radioactive enclosures is well established as an effective method for preventing the spread of contamination outside the enclosure".[1]

The Spring of 1961 heralded completion of the Lawrence Radiation Laboratory 4-foot Water-Cave Neutron Facility.[2] The need then arose for a remotely operated sealed-bag passout system as support equipment.

The major requirements of the passout system are as follows:

1. The equipment must be operable through the 4-ft. water-shield tanks.

2. To provide a box, attached to the main enclosure (Fig. 1) with a door between, and with a device on its lower face to secure plastic bags for receiving passouts.

3. To be able to change bags, remotely, without exposing contaminated surfaces, while still maintaining a low leak-rate seal.

4. A bag welder-cutter must reproduce reliable seals and give complete bag severing.

DESCRIPTION

The side shielding of the cave provides a large water-window for viewing the passout area, and offset access holes for introducing cables, lines, hoses, and other equipment. The water tank above the window was designed to receive a single Model 8 master-slave manipulator to be operated from outside the chemistry box (Fig. 2). It follows that the master-slave performs all the bagging operations with but two exceptions: (1) material is passed out of the chemistry box by its own master-slaves, and (2) the raising and lowering of bags is done by a hydraulic jack. The bags selected for bagouts are 3-mil polyethylene, 12 in. wide and up to 29 in. long.

The size and configuration of the larger items to be passed out of the chemistry box dictated that half-gallon ice-cream cartons be utilized as secondary containers. This, along with bag size, determined the size of the Passout Box, which is 9x9x12 in. high, and with a 7-1/2-in. hole in its lower face. Material is 14-a stainless steel heliarc welded. The door-opening between the chemistry box and the Passout Box is 6-3/4 in. wide by 11 in. high. The door itself swings into the Passout Box and is operated by the back area slave. When closed, the door makes a contamination-proof seal against a gasket around the inside of the door opening. The Receiver Ring mounted on the lower box face has a soft tubular-cross-section rubber gasket for bags to seal against (Figs. 3 and 4).

One adaptation on the bags, at the open end, is the addition of a pliant polyethylene cuff, secured by a double-faced contact tape. The last element of the bag assembly is the Bag Adapter Ring, which couples with the cuffed bag to comprise a unit for placement on the Lifting Fork.

In practice, the master-slave is used to pick up the bag unit and place it on the Lifting Fork of the Bag Jack (Fig. 4). The operator then works a pump to jack the bag assembly up into the Receiver Ring and against the gasket.

We would now be ready for passing out an object from the chemistry box except for one obstacle—the box is at -0.5 in. w. g., so that the bag collapses when the interchange door is opened. The bag may even draw up inside of the Passout Box, so one must do one of several things: he can, in anticipation, have previously weighted the bag with one pound of sand or lead shot; he can hold the bag down with the back-area slave; or he can ignore the turn of events and successfully use one of the chemistry box slaves to force the carton down into the bag. Still another excellent alternative is to place an empty carton in the bag prior to jacking into the Receiver Ring. The carton must be "worked" up into receiving position, using the back-area slave. An aid to doing this is a simple adjustable-height stand that plays a later role during the bag welding.

At this point we shall assume that the passout is complete, that bag welding is next in order and that conditions are as in Fig. 5, but with the welder jaws exerting only light pressure on the bag. To attain perfect welds, it is necessary to remove excess tension on the bag above and below the welder jaws; below, by bringing the adjustable stand under the bag to bear the weight; above, by using the slave to distribute the bag between and above the jaws. The slave then tightens the welder jaws securely and welding can begin.

The Bag Welder is suspended from the Passout Box by three struts (Fig. 1). Opening and closing of the jaws is accomplished by operating the welder crank with the rear-area slave. The power supply is located outside the shielding and current is conveyed by electrical cable to the welder heating elements. The welder actually makes two heat seals, 1/16 in. wide and on 1/2-in. centers (along the width of the bag). Severing is done between welds by a hot nichrome wire (23 ga), while welds are made by nichrome wire (19 ga) rolled flat to 0.021 in. thickness (Fig. 8).

A 7-1/2-amp current is required for the weld, and 5-3/4 amp for cutting. A selector switch on the power supply is employed to change from weld cycle to cutting (Fig. 9). A 15-sec. time interval is used in both instances. After welding and cutting are completed, the bag may be removed by the slave and placed into a shielded container, or where desired.

In bag replacement, the upper section of the previously cut-off bag will remain in a groove of the Receiver Ring (Figs. 3 and 6), and one may lower the jacking unit, remove the old Bag Adapter Ring, and replace a new bag unit on the Fork. At this point, the operator "cracks open" the passout door until the old bag stub is sucked up into the Passout Box. He can then jack the new bag unit part-way up into the Receiver Ring (Fig. 7), open the passout door, remove the old bag stub with one of the chemistry box slaves, close the door, and then jack the new bag unit into final seated position in the Receiver Ring. The old bag stub is disposed of in the next carton to be passed out.

The Bag Passout System may be used for passing objects into the chemistry box by using an adapter platform in conjunction with one of the Bag Adapter Rings.

APPLICATION AND RESULTS

The remotely operated passout unit herein described was employed in the July 1961 Lawrence Radiation Laboratory Separation of Cf and Es from Highly Irradiated Cm^{244}.[3] Approximately eight bagged passouts were made, as well as several pass-ins, during the run. In no case was any contamination spread outside the chemistry box.

Bag Passout units, similar to the above, have been successfully used here at LRL for over one year for high beta-gamma applications and have by now become part of our regular equipment.

ACKNOWLEDGMENT

The authors wish to give recognition to Herbert P. Cantelow of Lawrence Radiation Laboratory for his many contributions.

This work was performed under the auspices of the U. S. Atomic Energy Commission.

REFERENCES

1. H. P. Cantelow, L. E. Miles, and B. C. Abram, A Simple Rapid Welder for Plastic Bags and Sleeves, ANS Eighth Conference on Hot Laboratories and Equipment, (December 1960).

2. P. W. Howe, T. C. Parsons, and L. E. Miles, New Shielding Concept for High-Level Radiochemical Operations, Lawrence Radiation Laboratory Report UCRL-9657, April 1961 (unpublished).

3. S. M. Fried, and H. Schumacher, The Separation of Cf and Es from Highly Irradiated Cm^{244} (Paper at present in prepublication form).

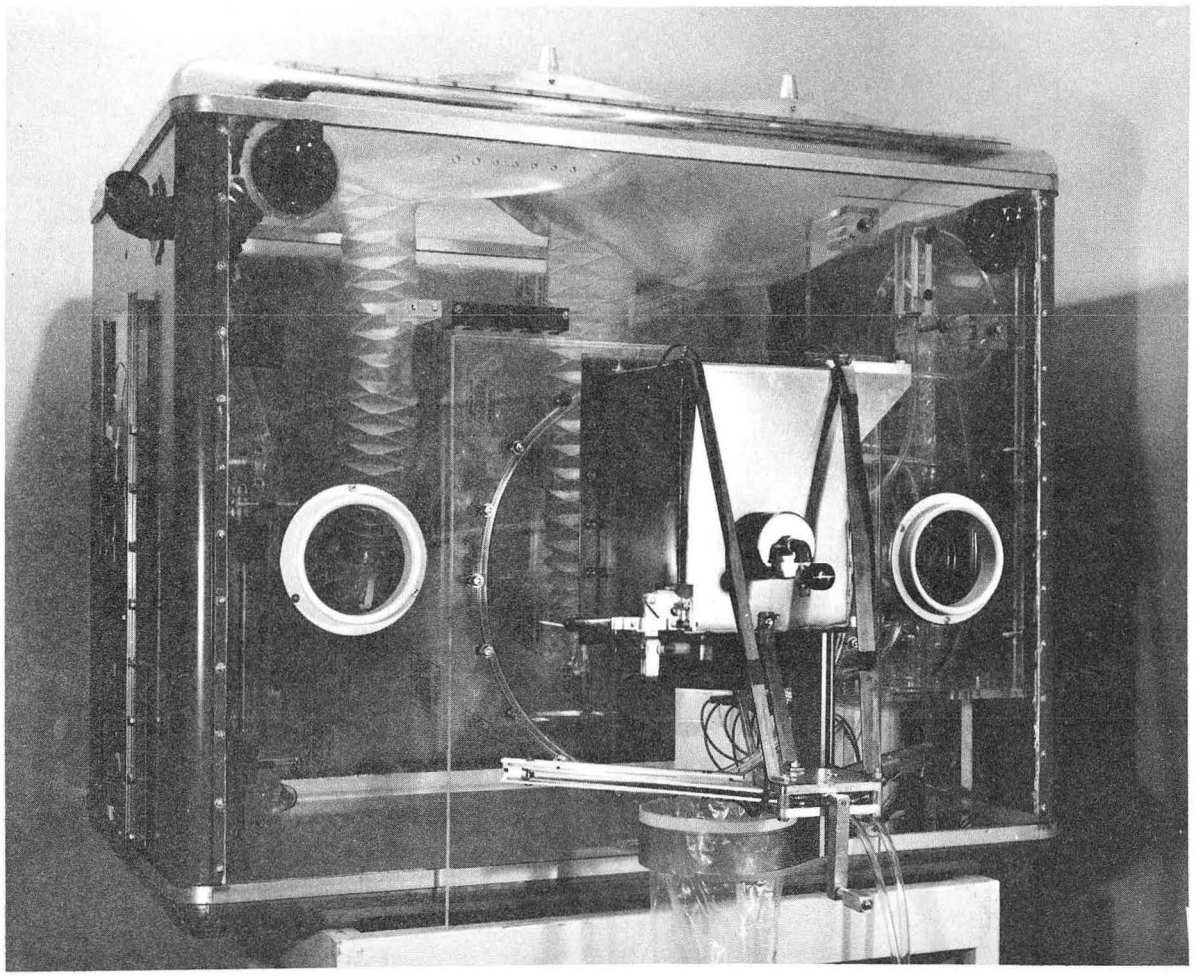

ZN-2870

Fig. 1. Passout box shown mounted on the chemistry box.

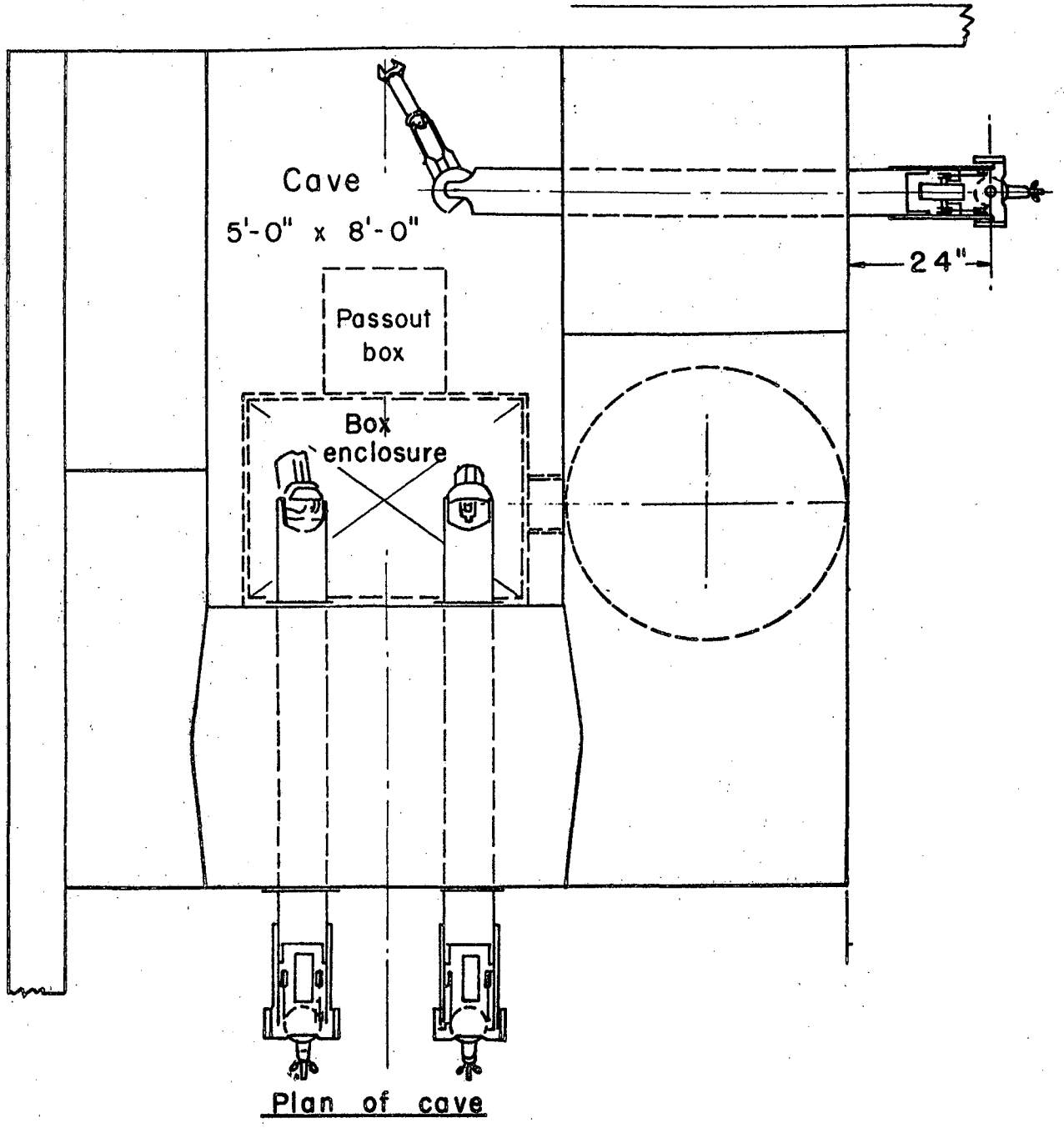

MUB-502

Fig. 2. The cave area.

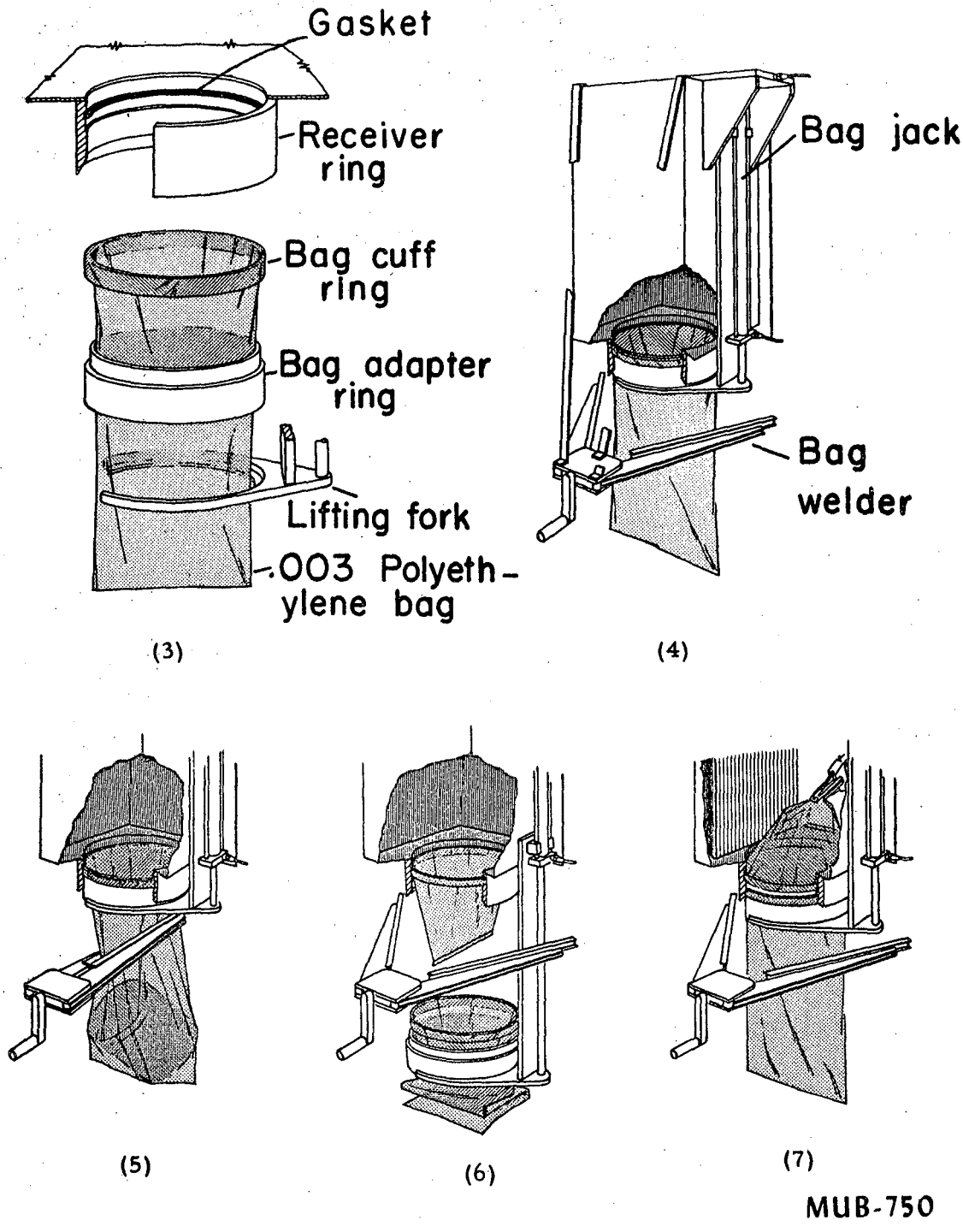

Fig. 3 through 7. Bag-sealing and bag-replacement operations.

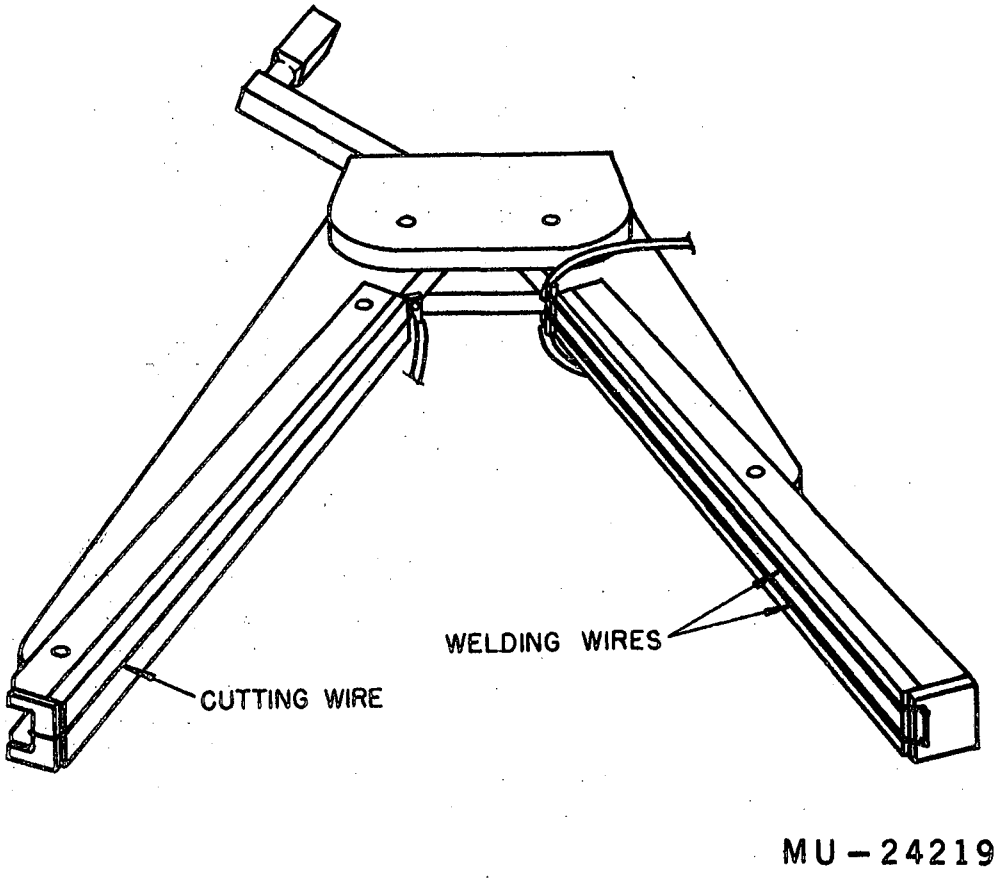

Fig. 8. Welder jaws, showing hot wires.

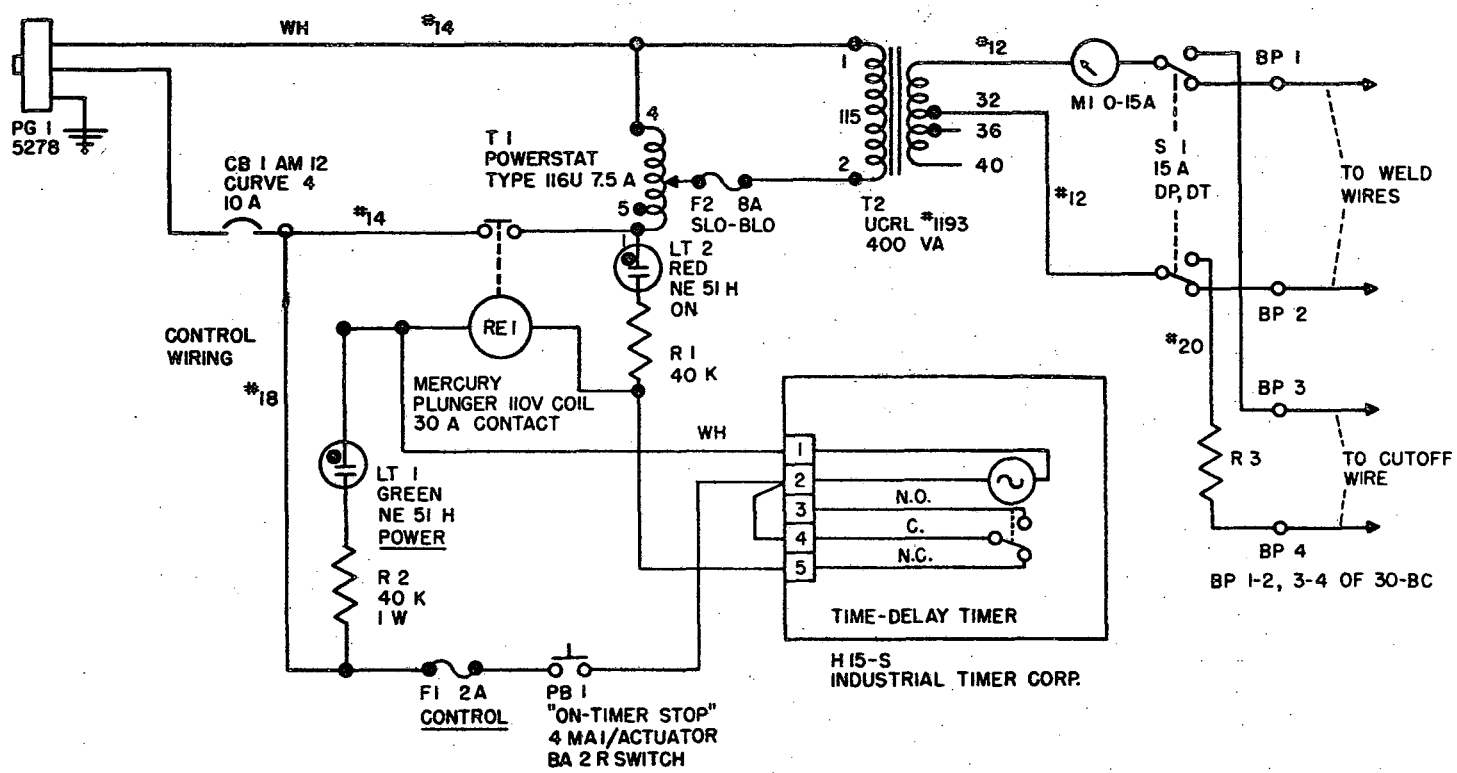

Fig. 9. Bag welder power supply.

This report was prepared as an account of Government sponsored work. Neither the United States, nor the Commission, nor any person acting on behalf of the Commission:

A. Makes any warranty or representation, expressed or implied, with respect to the accuracy, completeness, or usefulness of the information contained in this report, or that the use of any information, apparatus, method, or process disclosed in this report may not infringe privately owned rights; or

B. Assumes any liabilities with respect to the use of, or for damages resulting from the use of any information, apparatus, method, or process disclosed in this report.

As used in the above, "person acting on behalf of the Commission" includes any employee or contractor of the Commission, or employee of such contractor, to the extent that such employee or contractor of the Commission, or employee of such contractor prepares, disseminates, or provides access to, any information pursuant to his employment or contract with the Commission, or his employment with such contractor.