UCRL-9664

University of California

Ernest O. Lawrence Radiation Laboratory

TWO-WEEK LOAN COPY

This is a Library Circulating Copy which may be borrowed for two weeks. For a personal retention copy, call Tech. Info. Division, Ext. 5545

Berkeley, California

UCRL-9664

UNIVERSITY OF CALIFORNIA

Lawrence Radiation Laboratory
Berkeley, California

Contract No. W-7405-eng-48

A 4-INCH PORTABLE NEUTRON SHIELD FOR A RADIOCHEMISTRY ENCLOSURE

Leonard E. Miles, Patrick W. Howe, and Thomas C. Parsons

July 1962

UCRL 9664

A 4-INCH PORTABLE NEUTRON SHIELD FOR A RADIOCHEMISTRY ENCLOSURE*

Leonard E. Miles, Patrick W. Howe**, and Thomas C. Parsons

Lawrence Radiation Laboratory
University of California
Berkeley, California

The paper describes a simple portable neutron shield enclosure with tong manipulators for surrounding a radiochemistry box-type enclosure. The shield allows the chemist to work with safety with neutron emitters having a flux density equivalent to a point source of 5.56×10^6 neutrons/sec. Except for minor adjustments, the radiochemistry enclosure can be completely equipped and quickly slid into the shield enclosure ready for work.

INTRODUCTION

The necessity for a simple neutron shield has become more pressing with the increasing amount of work with californium. Since some isotopes of this element are relatively short-lived, it is important that operating equipment be efficient, so as to avoid the loss of precious material and also to reduce the radiation exposure of the operator. Much of the work done in the enclosure involves precise refining of small quantities of the material, and preparation of samples and targets. It was believed that most of this type of work would not require the use of more than 2 micrograms of californium (point source), which produces a neutron density of 5.56×10^6 neutrons per second. With this count, 4 in. of hydrogenous material reduces the radiation exposure to approximately 10 mr/hr, which is a reasonable working level.

CONSTRUCTION

Dolly. The dolly, Fig's. 1 & 2, consists of a rectangular channel-iron bottom frame with 4 casters mounted at the corners. Welded to the bottom frame are tubular steel members, braced to the bottom frame, open at the tops, and extending upward to a suitable height for supporting the bottom shield.

Shield Bottom. The bottom of the neutron shield is a flat steel tank 3 in. thick, filled with water to which has been added sodium dichromate in the ratio of 25 parts per million as a rust inhibitor. Dowels project downward at the four corners to position the tank in the top of the tubular members of the dolly. A portion of the tank projects approximately 9 in. downward in a 2-in.-thick shell, U-shaped and with its opening toward the back. This shields a centrifuge which is mounted through the bottom of the Berkeley box. The front of the tank is stepped to receive the shield front.

* Work done under the auspices of the U. S. Atomic Energy Commission
** ANS Member

Front. The front of the shield is essentially a vertical steel tank 4 in. thick, shaped to the contour of the Berkeley box. In the lower vertical section are openings through which the "castle manipulators" (1) are inserted and sealed to the tank. The top sloping section has an opening for a removable window. The opening is sealed off between the front and back sheets, leaving a ¼-in.-wide ledge at the back for a window stop. The top edge of the tank section is left open to permit filling with melted paraffin. A flange is provided ½ in. below the inside edges of the open top to retain a plug which is made of a ½-in. sheet of lucite. The plug is secured by screws after the front section is filled with paraffin.

Window. Two types of windows have been provided. One consists of a 6-in.-thick tank which fits the opening in the shield front. It is made of ½-in. sheets of lucite cemented together and filled with clear water. The other can replace it when it is necessary to use the glove ports in the sloping front window of the Berkeley box. It is a clear lucite window 4 in. thick, provided with two openings matching the two glove ports, and closed with removable lucite plugs.

Sides. The sides of the shield are made of 2-in.-thick plates of lucite fitted and bolted to the front section with 3/8-in. through bolts tapped into the edge of the lucite plates. Openings opposite the side doors of the Berkeley box are plugged with 2-in.-thick plates of lucite with handles.

Manipulators. Except for emergency use of the glove ports, all operations in the radiochemistry enclosure are performed with tongs through "castle manipulators" mounted through the shield front. These "castle manipulators" (Fig. 3) are similar in design to those made of lead, except that these are made of plastics to provide neutron shielding. The housing made of lucite is fabricated in two halves, each bored to fit the drum and bearing posts. These are held together at assembly by the mounting plate and housing clamp ring. The drum is likewise made of lucite in two halves held together by the bronze drum bearing and machined to hold the disc and clear the tong collet movement. The disc, made of rigid polyvinyl chloride, is slightly conical on both faces and has an integral hub which bears in a hole in the lucite drum. A hole is bored through edgewise to hold the tong collet. The collet is made of ½-in. (I.P.) standard PVC pipe, threaded for a locking nut and cemented through the disc. Brakes are provided on both the drum and the disc. With these and the tong collet, it is possible to hold the tong in any position desired.

REFERENCES

(1) William G. Ruehle, Jr., "Shielding Manipulator for Radioactive Material", Nuclear Science Abstracts, Vol. 13, Item 21152, (December 15, 1959).

Fig. 1, 4-inch Neutron Shield - Front
Leonard E. Miles, A 4-inch Neutron Shield

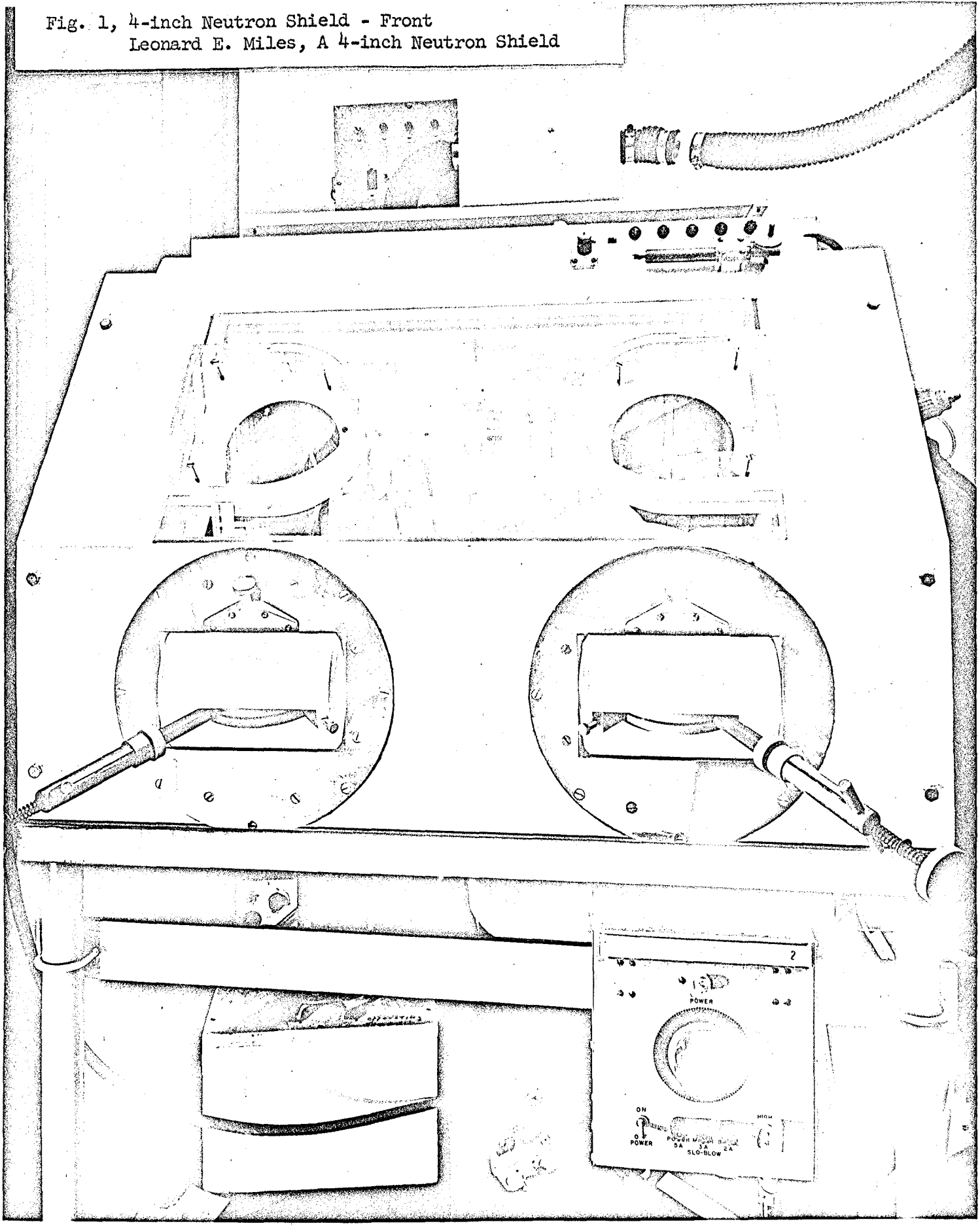

Fig. 2, 4-inch Neutron Shield - Side
Leonard E. Miles, A 4-inch Neutron Shield

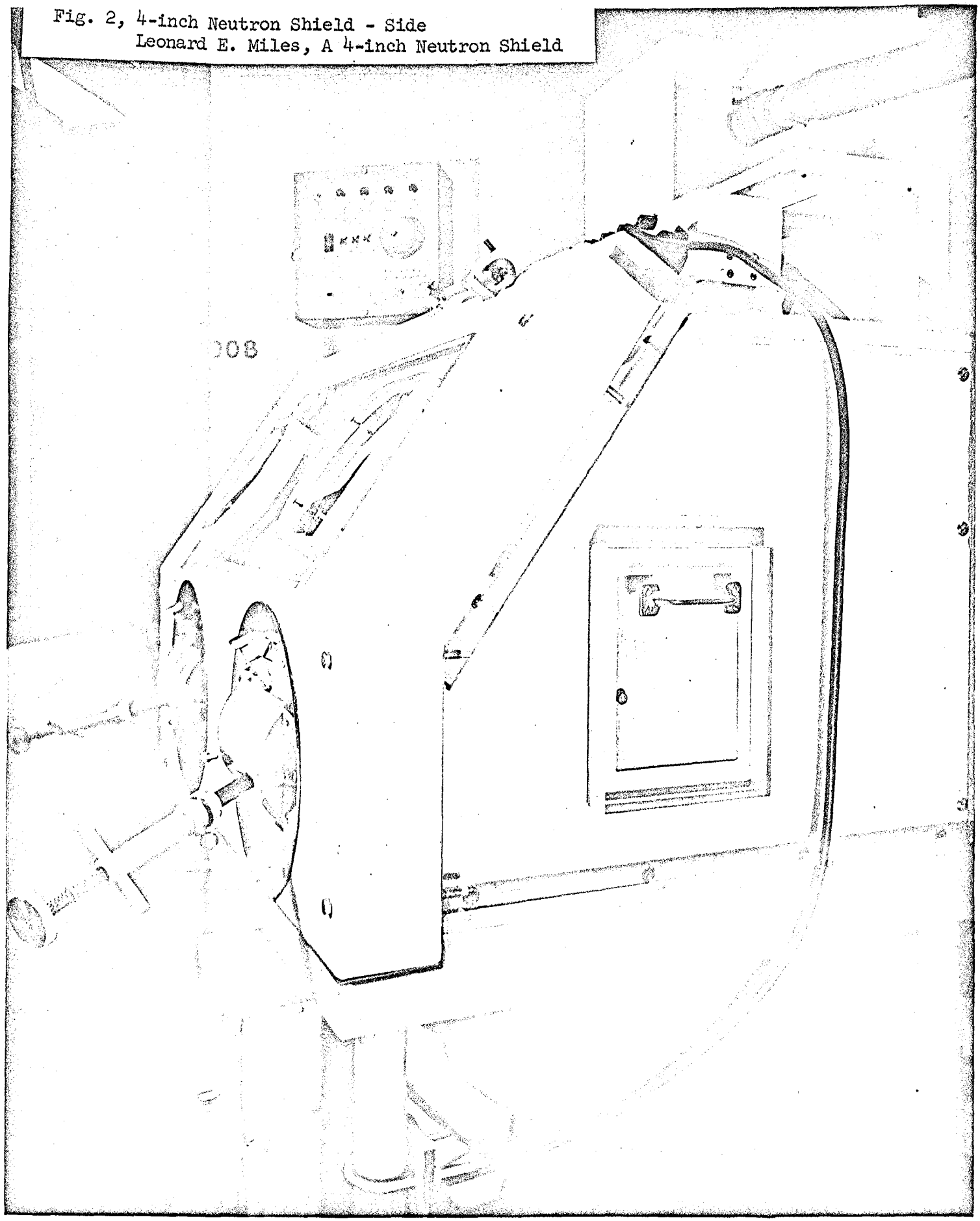

Fig. 3, Plastic Castle Manipulator
Leonard E. Miles, A 4-inch Neutron Shield

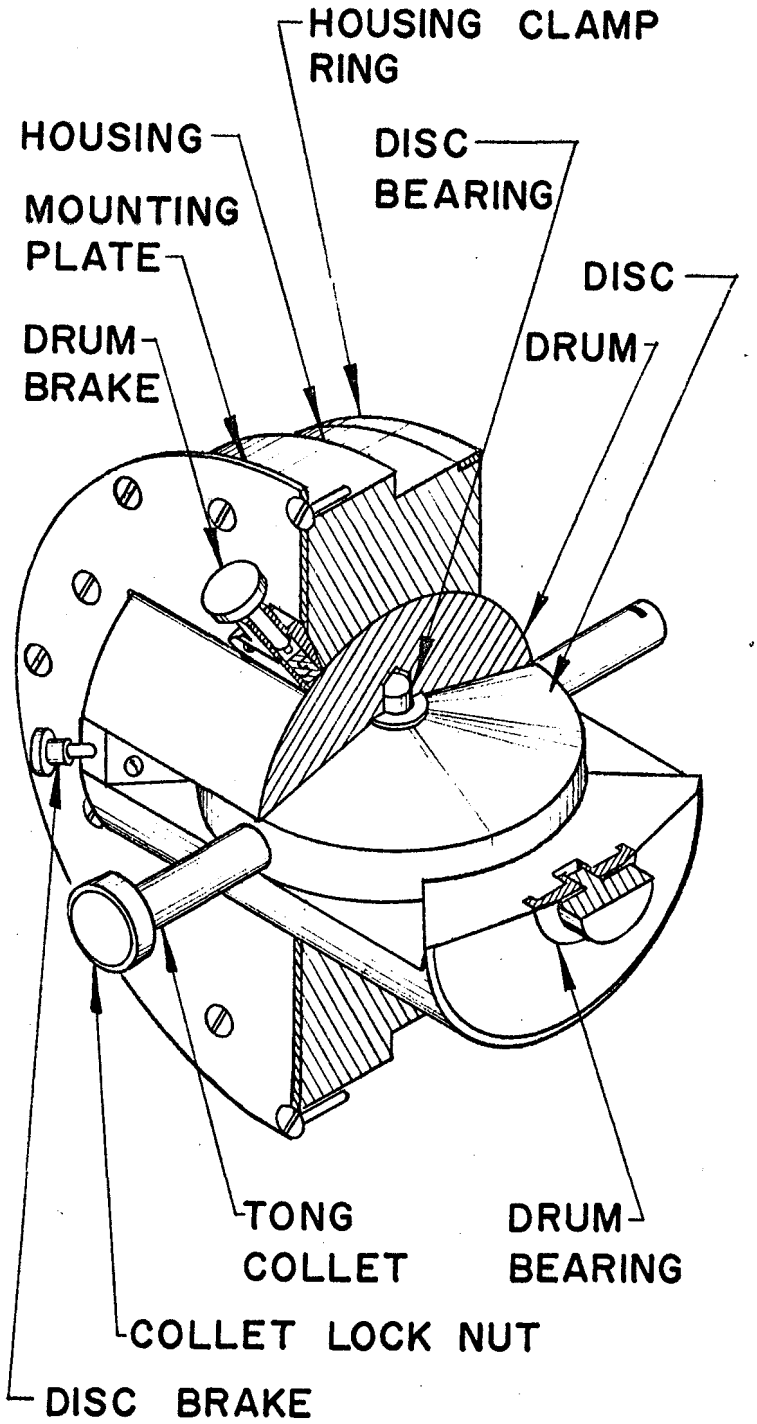

MU-27344