DECLASSIFIED

UCRL 96
cy 67/A
c.1

RESTRICTED

UNIVERSITY OF CALIFORNIA

Radiation Laboratory

TWO-WEEK LOAN COPY

This is a Library Circulating Copy which may be borrowed for two weeks. For a personal retention copy, call Tech. Info. Division, Ext. 5545

BERKELEY, CALIFORNIA

UCRL-96
c2

Lawrence Radiation Laboratory Library
University of California, Berkeley

Special Review of
Declassified Reports

Authorized by USDOE JK Bratton

Unclassified TWX P182206Z May 79

REPORT PROPERLY DECLASSIFIED

AUG 15 1979

Authorized Declassifier

Date

UNIVERSITY OF CALIFORNIA
RADIATION LABORATORY

Cover Sheet
Do not remove

INDEX NO. UCRL-96
This document contains 7 pages
and 4 plates of figures.
This is copy 67 of 72. Series A
Issued to: Info. Division

DECLASSIFIED

RESTRICTED

Classification

Each person who received this document must sign the cover sheet in the space below.

Route to	Noted by	Date	Route to	Noted by	Date
		5/7/51			
		8/23			
		8/26			
		9/5			
Patent Dept					
~~SUPPLEMENTARY DIVISION~~					

DECLASSIFIED

UCRL-96
Physics-General

RESTRICTED

UNIVERSITY OF CALIFORNIA

Radiation Laboratory

Contract No. W-7405-Eng-48

CLASSIFICATION CANCELLED
BY AUTHORITY OF THE DECLASSIFICATION
RA
Test # 1 - 1-17-56.
1-17-56.
DATE
Y
SI
PERSON MAKING THE
CHANGE

SUMMARY OF THE RESEARCH PROGRESS MEETING

April 22, 1948

R. K. Wakerling

Special Review of Declassified Reports
Authorized by USDOE JK Bratton
Unclassified TWX P182206Z May 79

REPORT PROPERLY DECLASSIFIED

8-15-79
ier Date

8-20-79
by Date

Berkeley, California

Standard Distribution	Copy Nos.
Argonne National Laboratory	1-10
Atomic Energy Commission, Washington	11-13
Brookhaven National Laboratories	14-21
Carbide & Carbon Chemicals Corp. (K-25 Area)	22-23
Carbide & Carbon Chemicals Corp. (Y-12 Area)	24-25
Oak Ridge National Laboratories	26-33
General Electric Company	34-37
Hanford Engineer Works	38-39
Iowa State College	40
Los Alamos	41-43
Office of New York Directed Operations	44
Monsanto Chemical Company	45
National Bureau of Standards	46-47
Patent Advisor	48
Library Branch, Oak Ridge, (for NEPA)	49
Library Branch, Oak Ridge	50-64
University of Rochester	65
Office of Chicago Directed Operations	66
University of California, Radiation Laboratory	
Information Division	67-70
Patent Department	71
Chemistry Department	72

Radiation Laboratory
University of California
Berkeley, California

RESTRICTED

RESEARCH PROGRESS MEETING

April 22, 1948

R. K. Wakerling

Range Measurements on 190 Mev Deuterons. W. Stephan.

Experiments are being conducted to check the results of theoretical calculations which have been made using the range energy formula

$$-\frac{dE}{dx} = \frac{4\pi e^4 z^2}{mv^2} NZ \log \left(\frac{2mv^2}{I}\right) .$$

where ze = charge of incident particle

Z = atomic number of the absorber

N = number of atoms per cc of absorber

I = average excitation potential, approximately 11.5 z.

All the measurements are made relative to aluminum as a standard. For this work the external beam is used, with the apparatus located in the cave. The beam passes from the cyclotron chamber through an evacuated tube into the cave where it passes into air through a 1/8" aluminum window. A schematic diagram of the arrangement is shown in Figure 1. The thickness of the absorber may be changed from outside the cave by means of the wheel shown in the diagram. Along the periphery of the wheel are mounted a number of absorbers of various thicknesses which can be rotated into place electrically. The ratio of the detector to the monitor current is plotted for various thicknesses of absorber to give a curve of the type shown in Figure 2 for aluminum. The best value of the mean range in aluminum, based on four measurements, is 18.91 grams per cm^2, which is equivalent to a thickness of 2.747". From the curves calculated by Smith, this corresponds to an energy of 194 Mev. On the basis of Smith's curve the straggling is approximately 3 Mev.

There has been some trouble in the stopping power measurements due to an effect which exhibits itself as a 10 to 15 mil horizontal translation of the

Bragg curve. A thorough search has been made for sources of this variation in the instrument. A possible explanation is the 10 microsecond variation in the deflector pulse position. A difference of 10 microseconds corresponds to about 0.12" of aluminum, while a variation of 15 microseconds corresponds to .025" of aluminum, or 1.25 Mev. No variation in the Bragg curve was found with changes in the deflector voltage up to 20 percent. Plans are under way to improve the deflector pulse position circuit after which the stopping power measurements of various materials relative to aluminum will be carried out.

Meson Measurements. C. Lattes.

Mass measurements of mesons have been made from $H\rho$ and range observations as well as by grain counting. As illustrated in Figure 3 the cyclotron beam striking a target gives rise to mesons which are bent in the magnetic field through the paths such as TB of radius of curvature ρ. The angle θ, at which a particle enters the plate at B, may also be measured. The energy of the particles is given in terms of $H\rho$ by the formula

$$E = \frac{e^2}{2mc^2} (H\rho^2)$$

In terms of the range in the emulsion, the energy is also given by

$$E = k\, m^{1-n}\, R^n$$

where R is the range and k and n are determined empirically. Combining these equations and putting in values for the constants, one has

$$m = 185 \frac{\rho^{1.4}}{R^{.4}}$$

The first measurements of the mass of negative mesons at all angles gave the mass 312 ± 16 electron masses on the basis of 1000 meson tracks. It was found that the spread of mass increases quite decidedly with angle.

In addition to the meson tracks that are found near the edge of the plate, there are meson tracks which are found at a distance of 2 or 3 millimeters from the edge. The mesons found at this distance from the edge have a smaller mass.

It is thought that these lighter mesons come from the target, since they would not have enough energy to get so far from the edge of the plate if they came from the decay of heavier mesons. If one takes only those mesons with angles less than 25°, a plot of the number of mesons against mass exhibits two peaks, one at mass 190 and the other at mass 300.

An independent measurement of the mass has been made by means of grain counting. The number of grains N and the mass m are connected by the relationship $N = mf(\frac{R}{m})$.

Proton tracks found on the same plates are used as standards. By grain counting, the mass of the deuterons was found to be 1.95. Figure 4 shows the comparison of the mass determined by grain counting and by $H\rho$ measurements. It is thus seen that the value of 310 electron masses obtained for the heavy mesons and 209 electron masses for the light ones secured by grain counting agree quite well with $H\rho$ measurements. The angular distribution is found to be isotropic up to an angle of 50°. Figure 5 (Film Program 295) exhibits a variation of the number of grains produced by various particles as the function of range. It is seen that the variation is essentially linear.

It is observed that the lighter mesons do not produce stars as frequently as the heavy ones and that the stars which are formed do not have as many prongs on the average. Figure 6 shows this comparison.

An estimate of the minimum half-life has been made on the basis of the path lengths of complimentary circles. Two mesons leaving the target at angles of $+\alpha$ and $-\alpha$ with the direction of the beam will strike the photographic plate at the same point. For angles $\alpha = \pm 30^{\circ}$ the shorter path length corresponds to a transit time of 1.4×10^{-9} seconds while the longer path corresponds to a time of 6.2×10^{-9} seconds. There has been no essential difference found in the number of mesons at these two angles, from which one would conclude that the half-life of the particles is greater than 6.2×10^{-9} seconds.

An arrangement is now being used which allows the detection of both positive and negative mesons on the same photographic plate. This is shown schematically in Figure 7.

N-P Scattering. R. Christian.

Attempts have been made to find a method for the theoretical calculation of n-p scattering which would agree with the experimental results obtained thus far. As a start the Yukawa potential $ge^{-r/R}/r$ was used. From p-p scattering measurements the range $1/R = 1.18 \times 10^{-13}$ cm had been determined, which seemed to be a likely value to start with. This range corresponds to 326 electron masses for the meson. The necessity for fitting the bound state of the deuteron serves to characterize the quantity g.

On these assumptions good agreement was obtained with the experimental observations of n-p scattering and a totoal cross section of .087 barns was calculated. It was found, however, that when the basic range was reduced to $\frac{1}{R} = 1.6 \times 10^{-13}$ cm, corresponding to 175 electron masses for the meson, the agreement with high energy scattering was not good. The total cross section calculated was .14 barns as compared to the measured value of .085 barns, which would seem to rule out larger values of $\frac{1}{R}$.

It is also necessary to fit the quadruple moment of the deuteron. This means adding a non-central force, so that the potential now takes the form $ge^{-r/R}(1 + \gamma s_{12})/r$. At the range $\frac{1}{R} = 1.18 \times 10^{-13}$ cm one cannot fit the experimental data and the quadruple moment both. In this case a large range gives a better result, but the total cross section calculated is still 50 percent too large. To get around this difficulty a longer range for the tensor forces was taken to give the potential the form $g(e^{-r/R}/r + \gamma s_{12} e^{-r/R^1}/r)$. This potential gives a fairly good agreement with the experimental scattering results. The total cross section calculated from it is .090 barns These calculations are being continued in an attempt to get a lower total cross section.

HW/RLID
5-3-48

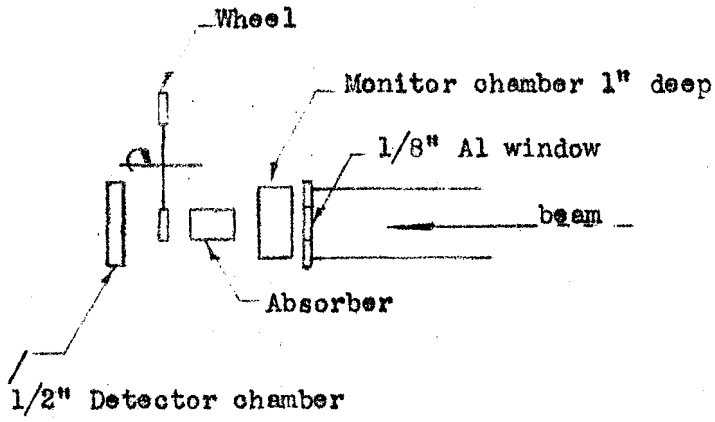

Fig. 1

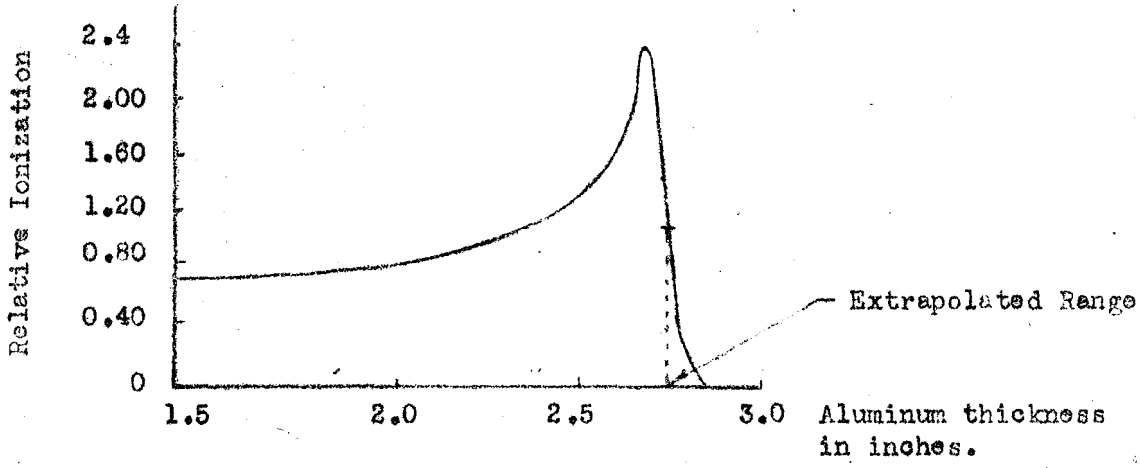

Fig. 2

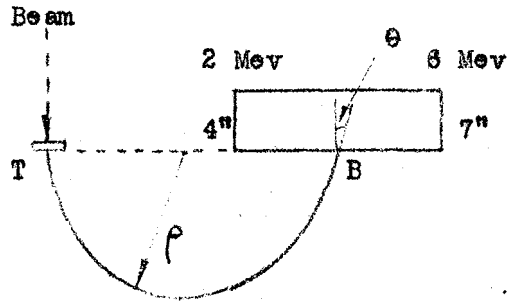

Fig. 3

MASS BY GRAIN COUNT

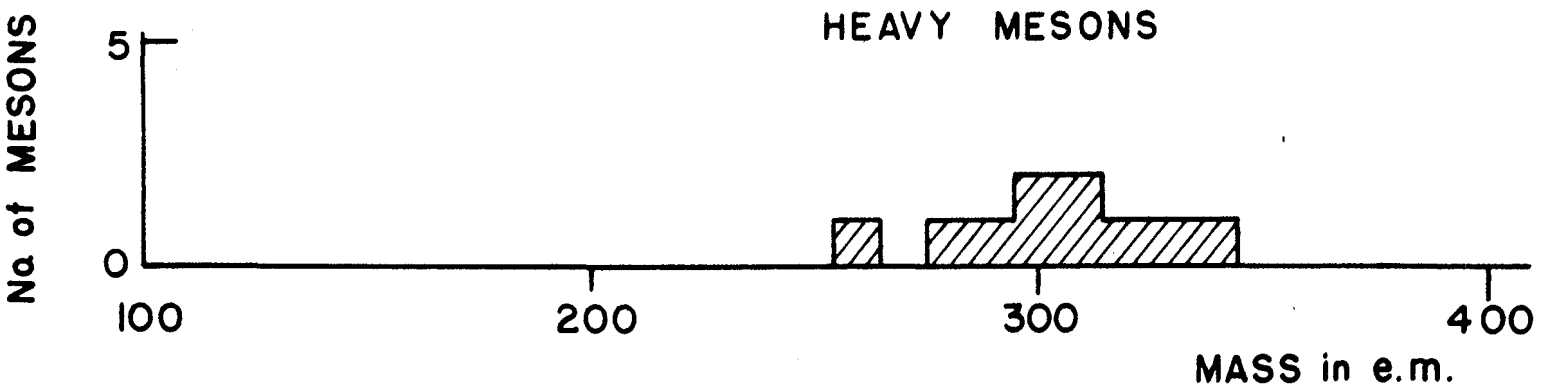

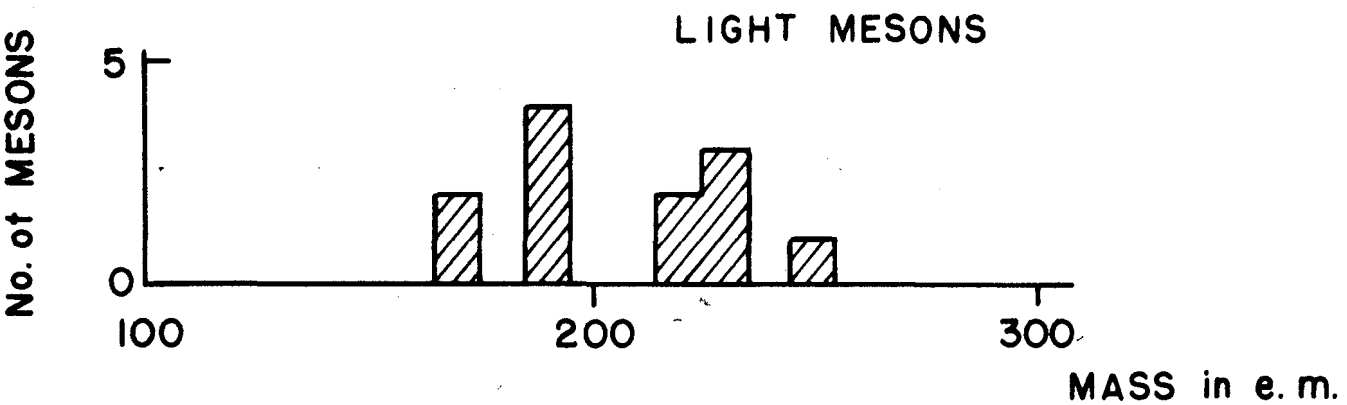

MASS BY Hρ

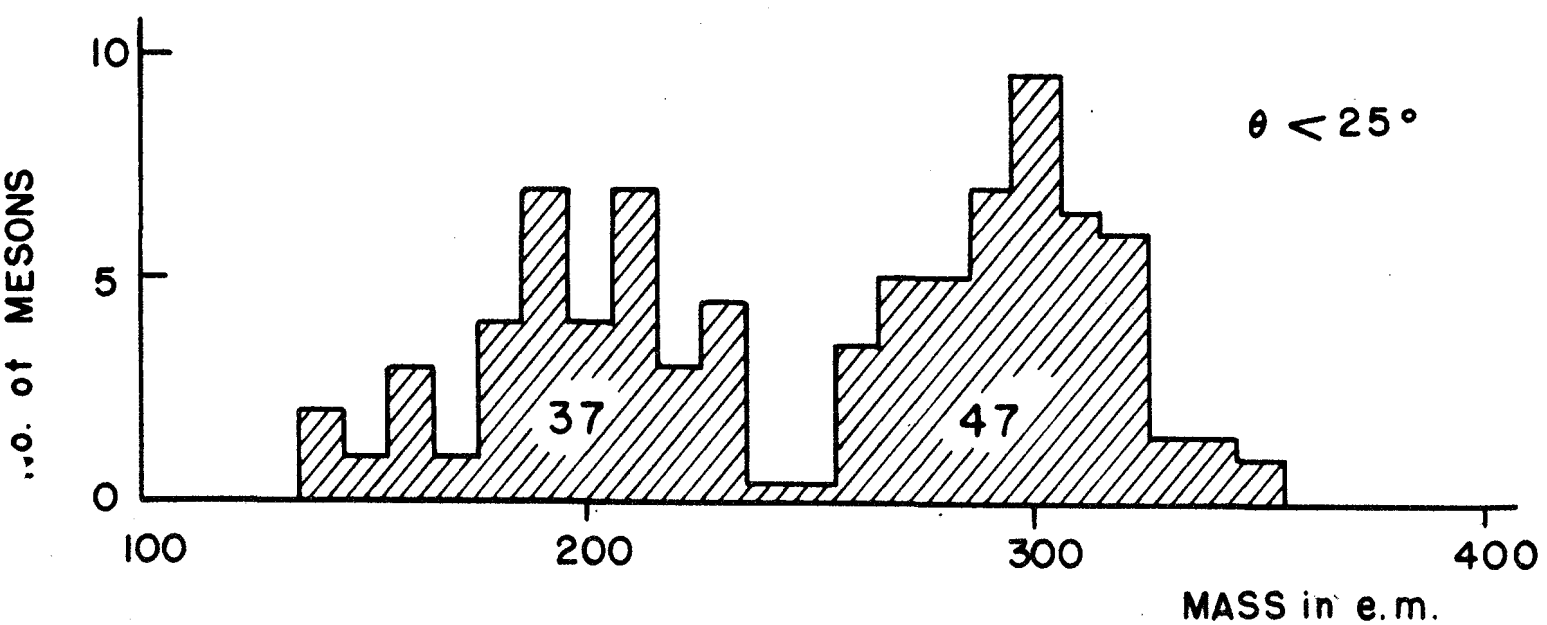

FIG. 4

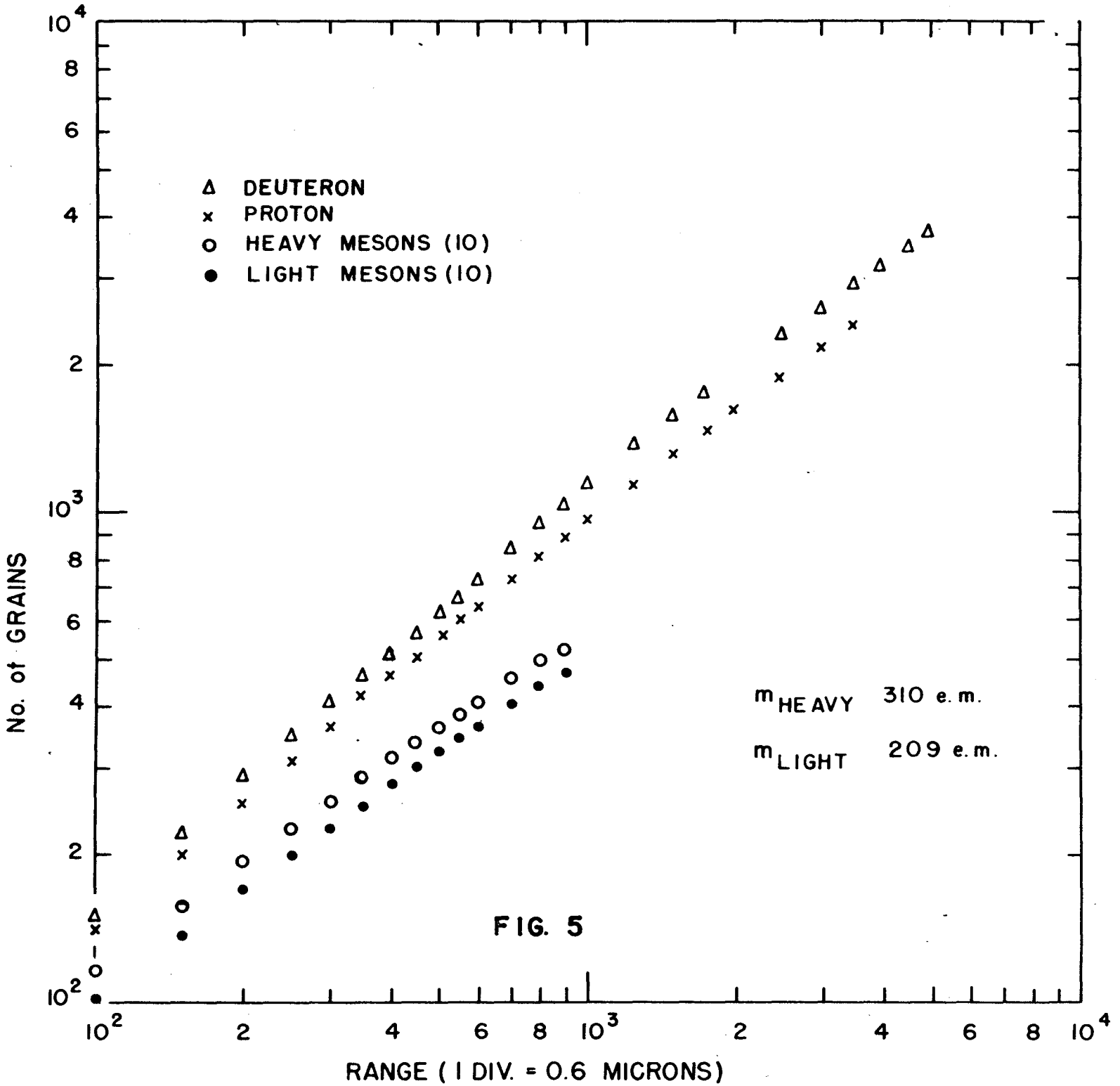
Δ DEUTERON
× PROTON
○ HEAVY MESONS (10)
● LIGHT MESONS (10)
m_{HEAVY} 310 e.m.
m_{LIGHT} 209 e.m.
No. of GRAINS
RANGE (1 DIV. = 0.6 MICRONS)
10^2
10^3
10^4

FIG. 5

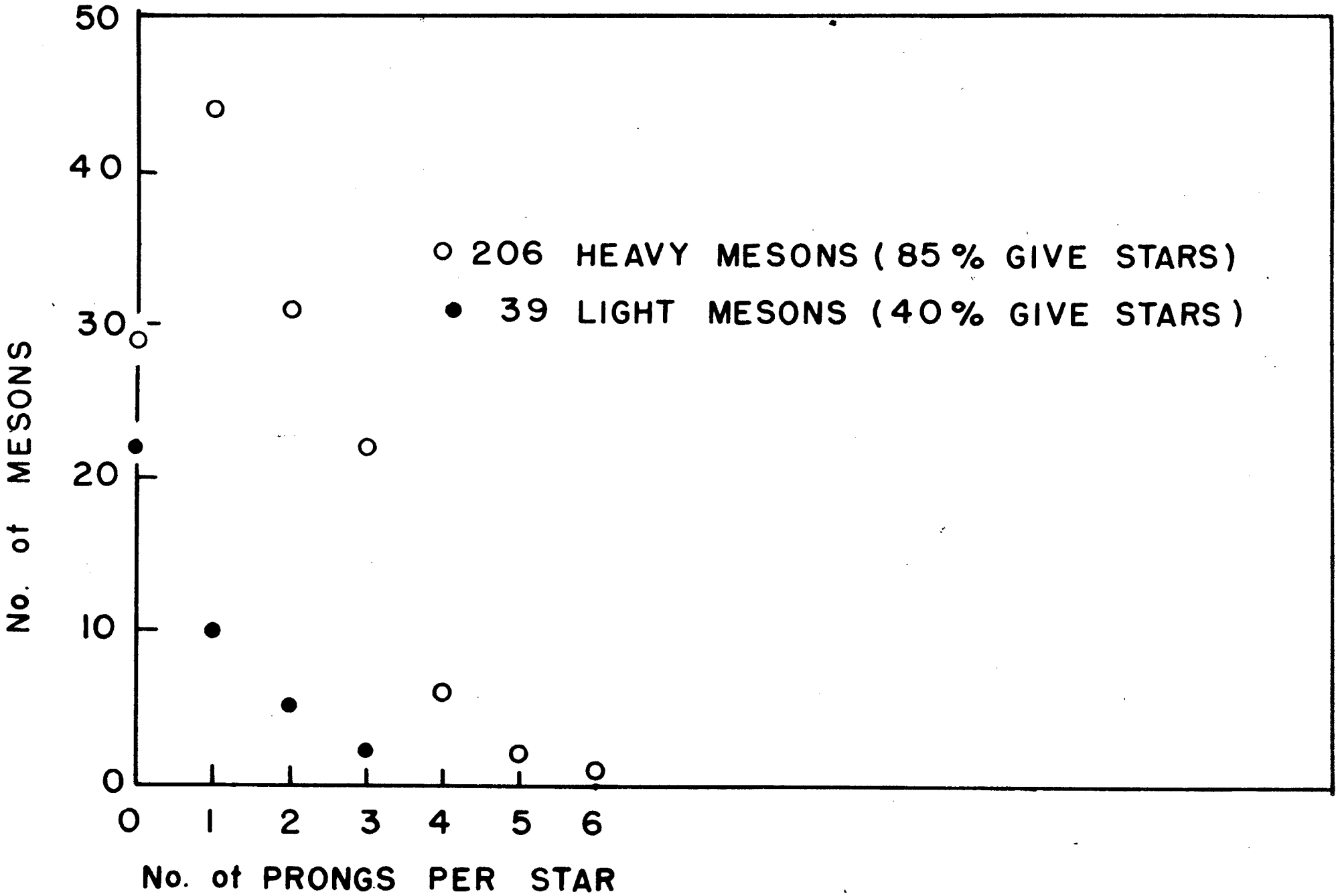
50
40
30
20
10
0
No. of MESONS
○ 206 HEAVY MESONS (85% GIVE STARS)
● 39 LIGHT MESONS (40% GIVE STARS)
0
1
2
3
4
5
6
No. of PRONGS PER STAR

FIG. 6

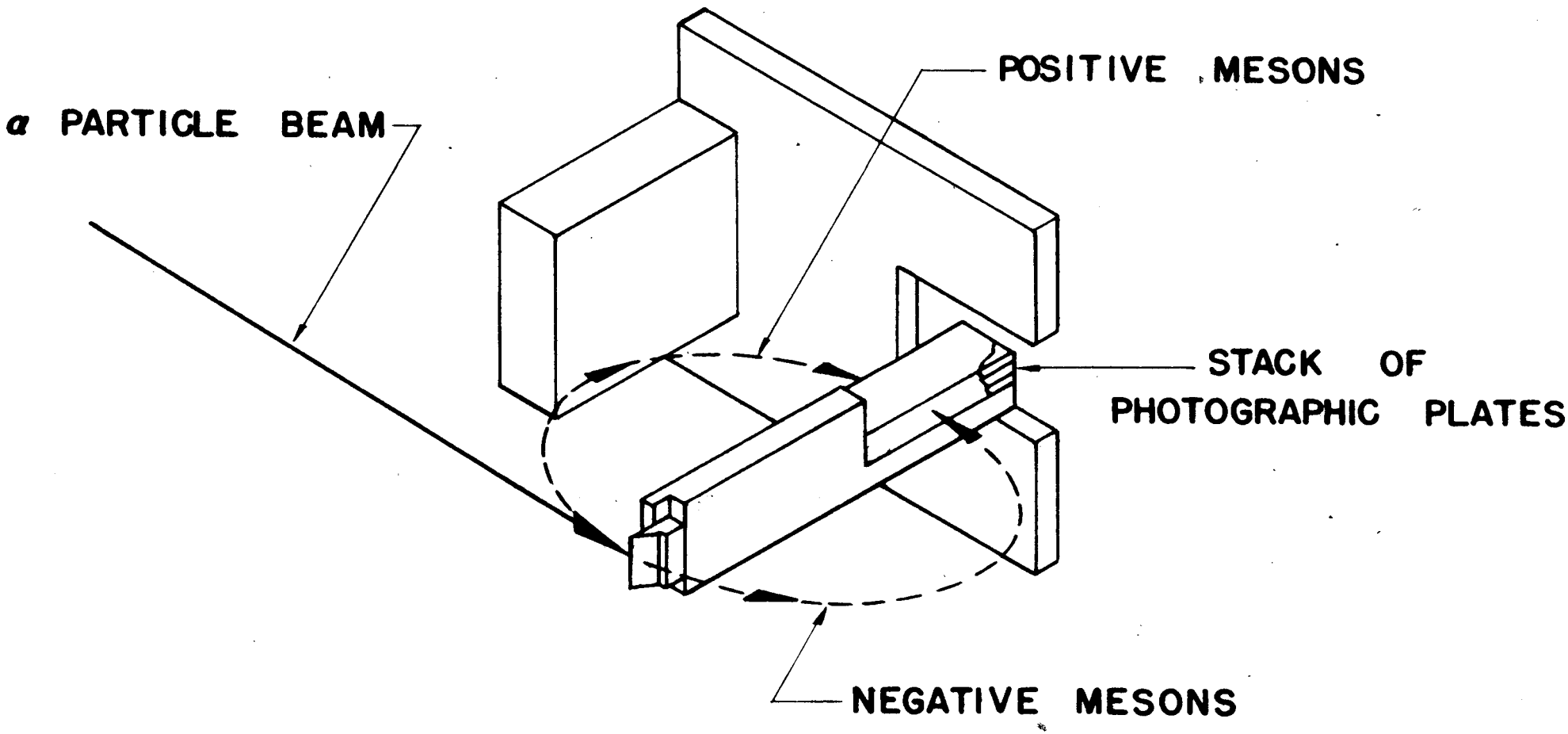
α PARTICLE BEAM
POSITIVE MESONS
STACK OF
PHOTOGRAPHIC PLATES
NEGATIVE MESONS

FIG. 7

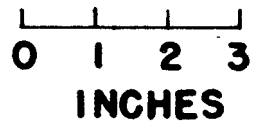
0 1 2 3
INCHES