UCRL 9729

UNIVERSITY OF CALIFORNIA

Ernest O. Lawrence Radiation Laboratory

TWO-WEEK LOAN COPY

This is a Library Circulating Copy which may be borrowed for two weeks. For a personal retention copy, call Tech. Info. Division, Ext. 5545

BERKELEY, CALIFORNIA

DISCLAIMER

This document was prepared as an account of work sponsored by the United States Government. While this document is believed to contain correct information, neither the United States Government nor any agency thereof, nor the Regents of the University of California, nor any of their employees, makes any warranty, express or implied, or assumes any legal responsibility for the accuracy, completeness, or usefulness of any information, apparatus, product, or process disclosed, or represents that its use would not infringe privately owned rights. Reference herein to any specific commercial product, process, or service by its trade name, trademark, manufacturer, or otherwise, does not necessarily constitute or imply its endorsement, recommendation, or favoring by the United States Government or any agency thereof, or the Regents of the University of California. The views and opinions of authors expressed herein do not necessarily state or reflect those of the United States Government or any agency thereof or the Regents of the University of California.

UCRL-9729
Limited Distribution

UNIVERSITY OF CALIFORNIA

Lawrence Radiation Laboratory
Berkeley, California

Contract No. W-7405-eng-48

HYPERFINE STRUCTURE AND NUCLEAR MOMENTS OF RaE (Bi^{210})

Seymour S. Alpert, Edgar Lipworth, Matthew B. White, and Kenneth F. Smith

June 5, 1961

HYPERFINE STRUCTURE AND NUCLEAR MOMENTS OF RaE(Bi^{210})

Seymour S. Alpert, Edgar Lipworth, Matthew B. White, and Kenneth F. Smith

Lawrence Radiation Laboratory
University of California
Berkeley, California

June 5, 1961

ABSTRACT

The magnetic-dipole interaction constant, a, and the electric-quadrupole interaction constant, b, have been measured for 5-day Bi^{210} (I = 1) in an atomic-beam. The results are $|a| = 21.78 \pm 0.03$ Mc/sec and $|b| = 112.38 \pm 0.03$ Mc/sec, with $b/a = +5.160 \pm 0.007$.

The nuclear magnetic-dipole and electric-quadrupole moments obtained from the interaction constants are $|\mu| = 0.0442 \pm 0.0001$ mm and $|Q| = 0.13 \pm 0.01$ barns, respectively. The signs of these moments are not determined by the experiment.

The ordering of the hyperfine levels is F = 1/2, 5/2, and 3/2. The values of the hyperfine level separations are

$$\Delta\nu\ (F = 5/2 \longleftrightarrow F = 3/2) = 194.93 \pm 0.09 \text{ Mc/sec.}$$

$$\Delta\nu\ (F = 3/2 \longleftrightarrow F = 1/2) = 220.19 \pm 0.08 \text{ Mc/sec.}$$

HYPERFINE STRUCTURE AND NUCLEAR MOMENTS OF RaE(Bi^{210})*

Seymour S. Alpert, Edgar Lipworth, Matthew B. White, and Kenneth F. Smith†

Lawrence Radiation Laboratory
University of California
Berkeley, California

June 5, 1961

I. INTRODUCTION

The beta spectrum of RaE has played an important role in the development of beta-decay theory, for it is the only known case of a first forbidden transition $\Delta I = 1$ (yes), with a nonallowed shape. At one time the spectrum shape was regarded as the only evidence for the existence of a pseudoscalar term in the beta-decay interaction,[1] but subsequent theoretical work by Yamada[2] together with a measurement of the ground-state spin ($I = 1$) by Title[14] showed this was not in fact implied. There are two papers, by Plassmann and Langer[3] and Wu,[4] that summarize the extremely interesting early history of the RaE spectrum.

In the past two or three years, and since the discovery of parity violation in weak interactions, there has been a considerable revival of interest in RaE,[5-9] because both the shape of the spectrum and the degree of polarization of the emitted electrons are possible checks on time-reversal invariance. Perhaps the best discussion of this point is contained in the paper of Alikhanov et al. who measured the polarization of the decay electrons.[8] They point out that the degree of polarization fixes the range of a parameter X determined by the ratio of certain nuclear matrix elements and that this

range is extremely sensitive to any violation of time-reversal invariance. They find little or no evidence for a violation, but point out that a direct calculation of X from the shell model would be a useful check on their conclusion. Such a calculation would involve a knowledge of the nuclear wave function. One independent check of the correctness of the wave function would be a comparison between experimental and calculated values of the nuclear moment of RaE.

There has been one prior attempt to measure the hyperfine structure of RaE--that of Fred et al., who used the method of optical spectroscopy.[10] However, their apparatus was inadequate to resolve the hyperfine structure, and they assigned a nuclear magnetic moment of less than 0.1 that of the stable Bi^{209}. This appeared unreasonable in view of the large moment of this latter isotope (4 nm), and they were led to assign an erroneous spin value (I = 0) to RaE. Some of the consequences of this assignment are traced in a paper by Lee-Whiting[11] on the β spectrum of RaE.

The results presented here supplement a large body of information that exists now on the nuclear moments of bismuth isotopes.[12] Blin-Stoyle and Parks have explained the large deviation of the moment of Bi^{209} from the Schmidt value as being due to interconfigurational mixing,[13] but as far as we know, no systematic attempt has yet been made to explain the variation of moments between different bismuth isotopes.

II. THEORY

The nuclear spin of Bi^{210} is 1.[14] This value of the spin restricts the angular-dependent interactions between the nucleus and surrounding electrons to magnetic-dipole and electric-quadrupole interactions. These interactions give rise to the hyperfine structure and can be represented by a Hamiltonian of the form

$$\mathcal{H} = a\,\vec{I}\cdot\vec{J} + b\,Q_{op}, \tag{1}$$

where a and b are the magnetic-dipole and electric-quadrupole interaction constants, respectively, $\vec{I}$ is the nuclear spin, $\vec{J}$ is the electronic angular momentum, and Q_{op} is given by[15]

$$Q_{op} = \frac{3(\vec{I}\cdot\vec{J})^2 + 3/2\,(\vec{I}\cdot\vec{J}) - I(I+1)\,J(J+1)}{2I(2I-1)\,J(2J-1)} . \tag{2}$$

In the absence of an applied magnetic field, the total angular momentum, $\vec{F} = \vec{I} + \vec{J}$, is a constant of the motion. In a representation where F^2 and F_z are diagonal matrices, the operators $\vec{I}$, $\vec{J}$, and Q_{op} are also diagonal. Therefore, the solution of Eq. (1) can be written

$$(W/a)_F = C_1(F) + C_2(F)\,b/a, \tag{3}$$

where $C_1(F)$ and $C_2(F)$ are constants depending only upon F for a given I and J, and $(W/a)_F$ is the energy, in units of a, of the hyperfine-level characterized by the quantum number, F. A plot of $(W/a)_F$ vs b/a is a straight line which in general has a different slope for each value of F. A plot of $(W/a)_F$ is shown in Fig. 1 for values of I and J appropriate to Bi^{210} (i.e., 1 and 3/2, respectively). For vanishing quadrupole moment,

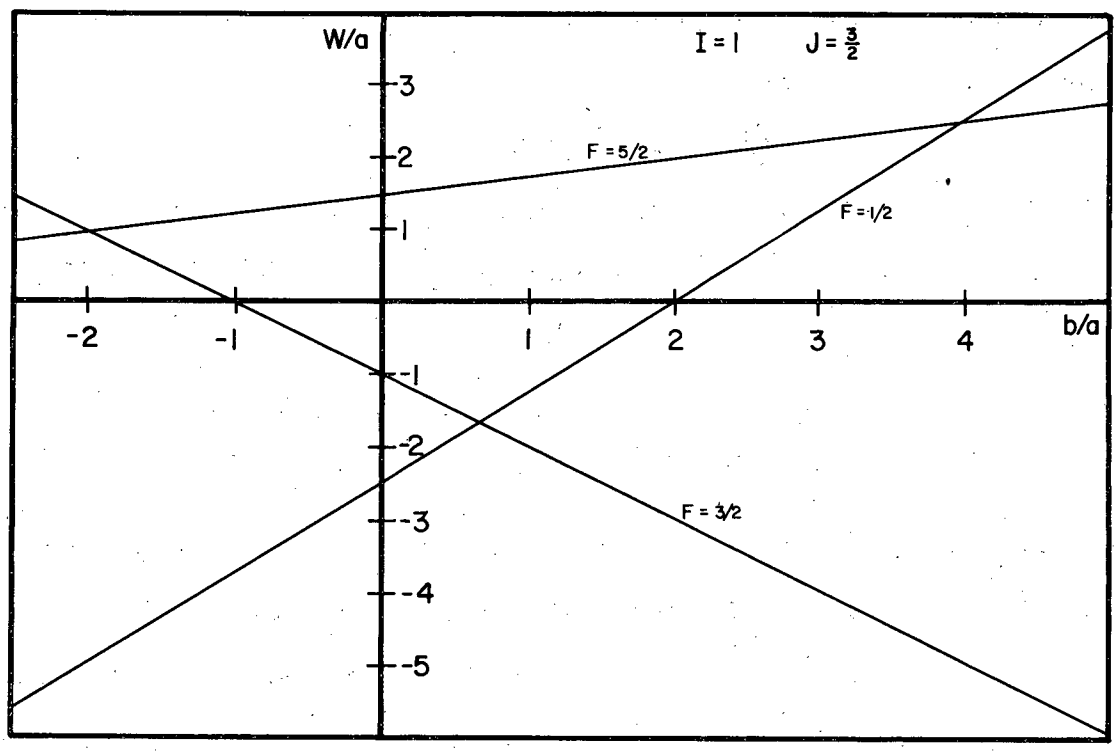

MU-15559

Fig. 1. Hyperfine level separations (in units of W/a) in an isotope with I = 1, J = 3/2 plotted as a function of b/a. Note that in the diagram, a has been assumed positive, whereas in fact the sign of a in RaE is not known.

we have $b = 0$, and the hyperfine separations between levels of different F obey the well-known Landé interval rule. For values of b/a less than -2 or greater than $2/3$, the levels are no longer in normal order, and an inversion is said to exist. Such is the case with Bi^{210}, where $b/a = 5.160$.

When an external magnetic field H is present, the Hamiltonian (1) becomes

$$\mathcal{H} = a\,\vec{I}\cdot\vec{J} + b\,Q_{op} - g_J\mu_0\,\vec{J}\cdot\vec{H} - g_I\mu_0\,\vec{I}\cdot\vec{H}\,, \qquad (4)$$

where g_J and g_I are the electronic and nuclear g factors, respectively, and μ_0 is the Bohr magneton; g_J has been measured in stable Bi^{209} and has the value $g_J = -1.6433 \pm 0.0002$.[16] For small values of the magnetic field H, i.e., for $g_J\mu_0\,\vec{J}\cdot\vec{H} << a\,\vec{I}\cdot\vec{J}$, the separation in terms of frequency, between adjacent magnetic sublevels of a given value of F can be written as

$$\nu = g_F\frac{\mu_0 H}{h}\,, \qquad (5)$$

where

$$g_F \approx g_J\,\frac{F(F+1) + J(J+1) - I(I+1)}{2F(F+1)} \qquad (6)$$

Here h is Planck's constant, and in the expression for g_F a small term proportional to g_I has been omitted. During the course of the experiment, the transitions labeled α and β in the energy-level diagram of Fig. 2 were observed, first at low fields, where their field dependence is given by Eq. (5), and then at higher and higher fields, where the dependence is determined by an exact solution of the Hamiltanian (4), and in particular by the values of a and b. An I.B.M. program has been written to solve the Hamiltonian as

a function of magnetic field. The input data are the observed transition frequencies and fields and their uncertainties. The output is the best values of a and b obtained by a least-squares fit of Eq. (4) to the data. Provision is made within the program to permit g_J to be an independent parameter if this is so desired; in this case the output is the best values of a, b, and g_J. With these values of a and b, a second I. B. M. program is used to calculate transition frequencies at higher fields, and a search is made for new resonances. When they are found, the new data is treated as described above and the process continued until a and b are known sufficiently accurately to permit a search to be made for the direct hyperfine transitions ($\Delta F = \pm 1$) at low field. The fit of the Hamiltonian (4) to the data depends directly upon the choice of the sign of g_I. The data is processed for both choices of sign, and the "goodness of fit" is determined by the χ^2 test of significance.[17] In this way, the sign of the nuclear moment can be determined if the precision of observation justifies. These programs have been described elsewhere.[18, 19]

III. EXPERIMENTAL METHOD

The atomic-beam apparatus employed for this experiment has been described in a previous publication.[20] In the way first suggested by Zacharias,[21] the magnetic fields are adjusted to observe "flop-in" transitions only. The observable transitions within a given F state in Bi^{210}--those labeled α and β in Fig. 2--are

$$\alpha: \left(F = \frac{5}{2},\ M_F = \frac{1}{2} \longleftrightarrow F = \frac{5}{2},\ M_F = -\frac{1}{2}\right).$$

$$\beta: \left(F = \frac{3}{2},\ M_F = \frac{3}{2} \longleftrightarrow F = \frac{3}{2},\ M_F = \frac{1}{2}\right).$$

The α transition was observed up to a field of 50 gauss and the β to a field of 129 gauss where values of a and b were obtained sufficiently accurately to permit a search for the $\Delta F = \pm 1$ direct hyperfine transitions. All allowed direct hyperfine transitions have been observed at low field during the course of this experiment. The active sample was produced by the reaction $Bi^{209}(n,\gamma)Bi^{210}$ in a reactor. Because of the low thermal-neutron capture cross section of Bi^{209} (0.02 barn) large samples of stable bismuth (5 g) were exposed for 15 to 20 days in a flux of 2×10^{13} neutrons $cm^{-2}sec^{-1}$. The resulting specific activity of the samples was low, but with relatively long exposure and counting times (usually about 10 min), excellent resonances were obtained. A typical resonance is shown in Fig. 3. The active sample is evaporated from the oven shown in Fig. 4. Bismuth tends to evaporate as diamagnetic molecules, and before an atomic-beam deflexion experiment upon it is possible the molecules must be dissociated to atoms. The oven snout is heated at its tip by electron bombardment to a temperature of about 1500°C when bismuth molecules are well dissociated. The vapor pressure

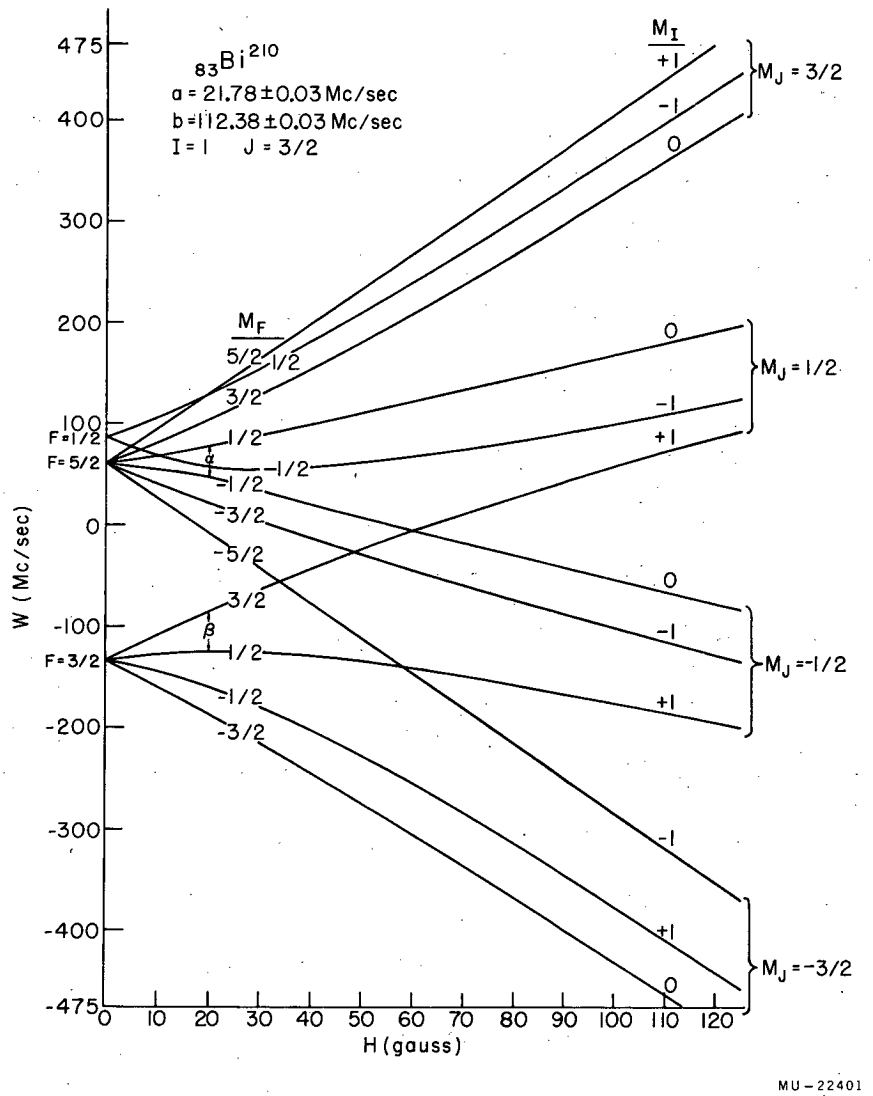

Fig. 2. Energy levels of RaE plotted as a function of magnetic field. These were calculated with the aid of I. B. M. program; the sign of a has been assumed positive.

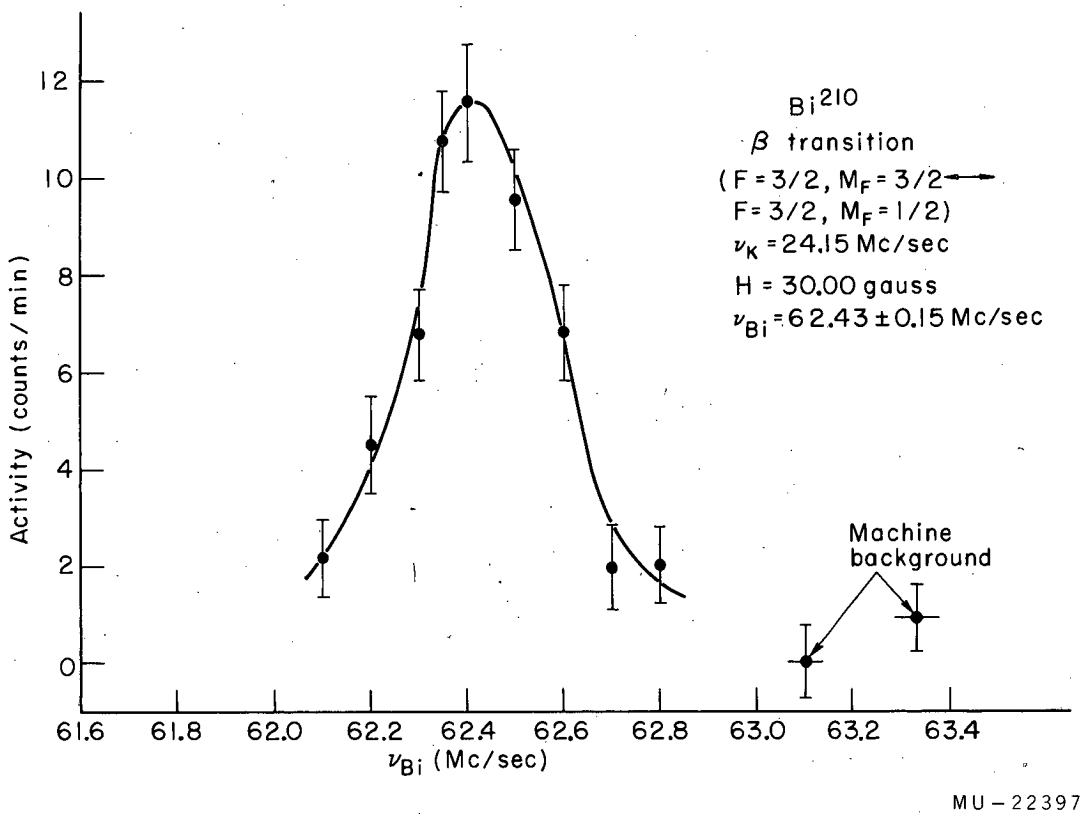

Fig. 3. A Bi^{210} resonance.

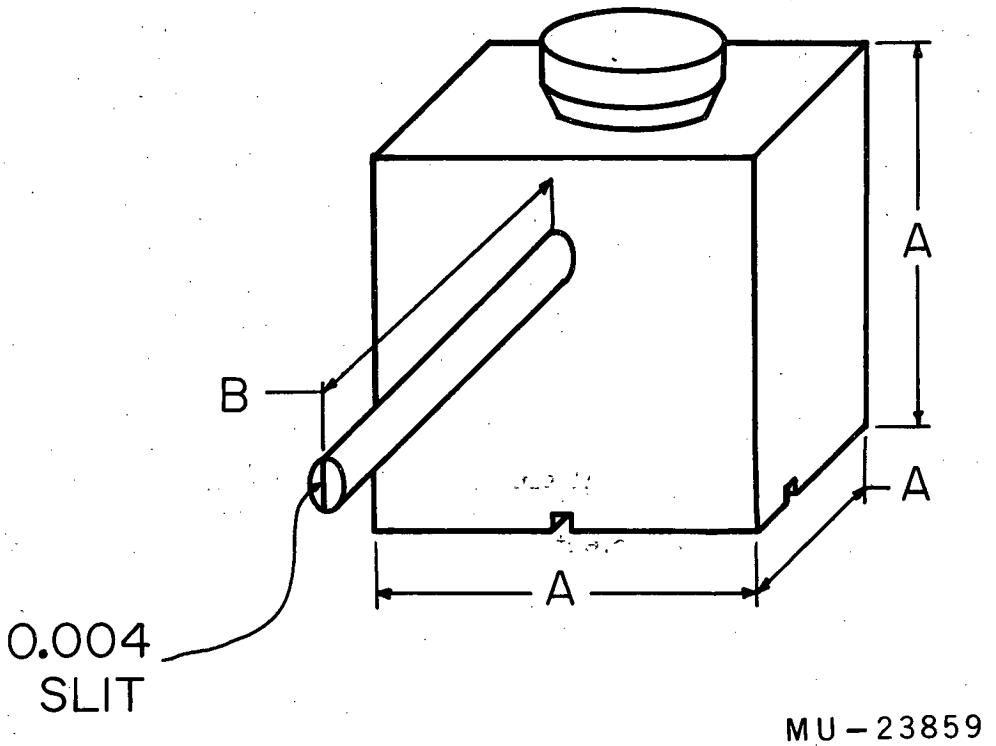

Fig. 4. Diagram of snouted oven where A is 5/8 in and B is 1-1/16 in.

of the bismuth is maintained at a proper value by conduction of heat down the snout to the oven block; during operation the oven temperature was about 800°C. The snout and oven block were manufactured from tantalum metal, and the exit slit at the end of the snout is 0.004 in. wide and 0.040 in. high. With this arrangement, a 70% dissociated beam of bismuth atoms was obtained.

The beam of Bi^{210} was collected upon "buttons," the surfaces of which were freshly coated with sulphur. The buttons were counted in small-volume, continuous-flow, methane β counters. Before counting, the active surface was covered with a single layer of scotch tape to prevent the counting of the α activity which is present in the beam and which arises from the decay of the Bi^{210} daughter, Po^{210} in going to Pb^{206}.

IV. RESULTS

Table I contains a list of all single-quantum transitions observed during the course of this experiment. The last column in Table I contains the compounded uncertainty ($\Delta\nu_i$) in the position of the ith resonance center obtained from the relation

$$\Delta\nu_i = \left[(\Delta f_i)^2 + \left(\frac{\partial f_i}{\partial H_i}\right)^2 (\Delta H_i)^2\right]^{1/2} \qquad (7)$$

Here Δf_i is the estimated uncertainty in the position of the center of the ith resonance, $\partial f_i/\partial H_i$ is the rate at which the frequency of the ith resonance varies with magnetic field, and ΔH_i is the estimated uncertainty in the magnetic field; ΔH_i is estimated from the width of the calibrating isotope resonance. We have taken the uncertainty in both the Bi^{210} and calibrating isotope resonances as one-fourth of their observed line width.

In addition to the 16 resonances tabulated in Table I, three two-quantum resonances of the type ($F = 5/2$, $M_F = 1/2 \leftrightarrow F = 5/2, M_F = -3/2$) were observed. These are listed in Table II. It is of interest to note that these transitions are observed at field values where the differences in frequency between the contributing transitions are many line widths. For example, for the resonances observed at 30.0 gauss the relevant frequency difference is 160 line widths. No extraordinary amount of radiofrequency power was used to induce these transitions, which were observed accidentally at the same radiofrequency loop current ($\sim$70 ma) used to observe the single quantum transitions.

The final values calculated for a and b on the basis of the results in Table I are:

$$|a| = 21.78 \pm 0.03 \text{ Mc/sec}$$
$$|b| = 112.38 \pm 0.03 \text{ Mc/sec}$$

with

$$\frac{b}{a} = +5.160 \pm 0.007.$$

The uncertainties quoted are three times the mean-square uncertainties calculated on the basis of weights derived from Eq. (7), and are intended to allow for any unknown sources of systematic error. The values of χ^2 (see reference 17) for the two possible choices of sign of g_I are:

$$\chi^2(g_I > 0) = 7.75$$
$$\chi^2(g_I < 0) = 7.72.$$

The close agreement between these two values means that the experimental data cannot be used to determine the sign of the nuclear moment of Bi^{210}. There are two reasons for this failure: (1) the small size of the nuclear moment of Bi^{210} and (2) the inadequate resolution of the C magnet at high field values, where the line width is appreciably increased by field inhomogenieties.

The data has also been reduced taking g_J as well as a and b as free parameters with the result $g_J = -1.6431 \pm 0.0004$. This result agrees well with that given in reference 16 and serves as an additional check on the consistency of the data.

Table I. Observed Resonances in Bi^{210}

Resonance type	Resonance frequency (Mc/sec)	Calibrating frequency[a] (Mc/sec)	Magnetic field (gauss)	Compounded uncertainty (Mc/sec)
α (5/2, 1/2 $\longleftrightarrow$ 5/2, -1/2)	54.299	24.150(K)	30.000	0.110
α	103.699	44.209(K)	49.998	0.104
β (3/2, 3/2 $\longleftrightarrow$ 3/2, 1/2)	10.100	2.000(Cs)	5.708	0.142
β	15.550	3.000(Cs)	8.555	0.171
β	27.000	5.000(Cs)	14.236	0.150
β	39.200	7.000(Cs)	19.901	0.165
β	62.399	27.150(K)	30.000	0.099
β	111.349	44.209(K)	49.998	0.113
β	173.448	74.425(K)	75.000	0.163
β	304.896	160.230(K)	129.000	0.163
ν_1 (5/2, 1/2 $\leftrightarrow$ 3/2, 1/2)	194.798	0.704(K)	1.000	0.038
ν_1	194.768	1.700(K)	2.400	0.056
ν_2 (3/2, -1/2 $\leftrightarrow$ 1/2, 1/2)	223.022	0.704(K)	1.000	0.149
ν_2	298.366	17.060(K)	22.001	0.160
ν_3 (3/2, 1/2 $\leftrightarrow$ 1/2, -1/2)	217.247	0.704(K)	1.000	0.151
ν_3	181.108	20.000(K)	25.388	0.008

[a]Note that both cesium and potassium have been used as the calibrating element.

Table II. Two-quantum transitions

Magnetic field (gauss)	Observed frequency (Mc/sec)	Calculated frequency[a] (Mc/sec)
14.24	20.050 ± 0.150	19.940
19.90	27.975 ± 0.075	27.960
30.00	42.400 ± 0.075	42.230

[a]Observed transitions are assumed to be identified by the quantum numbers ($F = 5/2$, $M_F = 1/2 \longleftrightarrow F = 5/2$, $M_F = -3/2$).

V. MAGNETIC DIPOLE MOMENT

The magnetic dipole moment of RaE can be calculated (neglecting a possible hyperfine anomaly) from the formula

$$\frac{\mu_1}{\mu_2} = \frac{a_1}{a_2} \frac{I_1}{I_2}$$

together with a knowledge of μ, a, and I for the stable isotope Bi^{209}. Using the value of the magnetic moment of Bi^{209} as measured by Procter and Yu[22] and corrected for diamagnetism by Walchli[23] [μ_{209}=4.07970 (81)nm], the spins $I_{209} = 9/2$ and $I_{210} = 1$, and the present value of a_{210}, we find

$$|\mu_{210}| = 0.0442 \pm 0.0001 \text{ nm}.$$

The sign of μ_{210} is not known, because the sign of a_{210} has not been determined in this experiment.

VI. ELECTRIC QUADRUPOLE MOMENT

The electric-quadrupole interaction constant, b, is related to the quadrupole moment, Q, by the expression

$$hb = - e^2 Q \left\langle \frac{3 \cos^2 \theta - 1}{r^3} \right\rangle_{JJ} , \qquad (8)$$

where the average is taken in the state $M_J = J$ and summed over all electrons. To evaluate this expression, we must know the electronic wave function. Since the g_J value of bismuth is known to be -1.6433 ± 0.0002,[16] and the g_J values for pure LS or JJ coupling are -2 and -4/3, respectively, it is apparent that the electrons are in a state of intermediate coupling.

The electronic ground-state configuration of bismuth is $6s^2 6p^3$; in the LS scheme the three p electrons can couple to levels $^2D_{5/2}$, $^2P_{3/2}$, and $^4S_{3/2}$. The J value in the ground state is 3/2 and since J is a good quantum number, the intermediatly coupled ground state can be expressed as a linear superposition of the three levels $^2D_{3/2}$, $^2P_{3/2}$, and $^4S_{3/2}$. The degree of level admixture can be determined by diagonalizing the 3-by-3 energy matrix in the LS energy scheme, treating the ratio of the electrostatic interaction energy to the spin-orbit coupling energy as a variable parameter, X, to be obtained by a fit to the experimental level scheme; for bismuth, Condon and Shortley find $X = 0.295$.[24] Once the energy matrix has been determined, it is easy to find the transformation matrix that determines the level admixture.

On the other hand, Inglis and Johnson have taken the transformation matrix and used it to obtain an expression for g_J in intermediate coupling.[25] With $g_J = -1.6433$ and the method of Inglis and Johnson, Lindgren and

Johansson have found $X = 0.300$,[12] which is in good agreement with the value obtained by Condon and Shortley. The intermediate coupled wavefunction in the JJ coupling scheme can be written as

$$\psi = C_1\psi_1 + C_2\psi_2 + C_3\psi_3 , \tag{9}$$

where

$$\psi_1 = (\tfrac{3}{2}\ \tfrac{3}{2}\ \tfrac{3}{2})_{3/2} , \quad \psi_2 = (\tfrac{3}{2}\ \tfrac{3}{2}\ \tfrac{1}{2})_{3/2} , \text{ and } \psi_3 = (\tfrac{3}{2}\ \tfrac{1}{2}\ \tfrac{1}{2})_{3/2} .$$

Lindgren and Johansson find

$$\left.\begin{aligned} C_1 &= -\ 0.177 \\ C_2 &= \ \ 0.318 \\ C_3 &= \ \ 0.932. \end{aligned}\right\} \tag{9'}$$

Schuler and Schmidt have evaluated $\left\langle \frac{3\cos^2\theta - 1}{r^3} \right\rangle_{JJ}$ in intermediate coupling, and find

$$\left\langle \frac{3\cos^2\theta - 1}{r^3} \right\rangle_{JJ} = \frac{2}{5}\left[(C_1^2 - C_3^2)\, R_r' + 2\sqrt{\frac{2}{5}}\, C_2(C_1 + C_3) S_r\right] \left\langle \frac{1}{r^3} \right\rangle , \tag{10}$$

where R_r' and S_r are relativistic correction factors tabulated by Kopfermann.[26]

Using calculations of Breit and Wills,[27] Lindgren and Johansson have shown that[12]

$$ha = -\, g_I \mu_0^2 \left[\frac{16}{15}\left(1 + \frac{1}{5} C_2^2\right) F' - \frac{16}{15} C_2^2 F'' + \frac{8}{15} C_2 (C_1 - C_3) G\right] \left\langle \frac{1}{r^3} \right\rangle , \tag{11}$$

where F', F'', and G are again relativistic correction factors tabulated by Kopfermann.[26] Combining equations 8, 9', 10, and 11 and using the values

of a and g_I appropriate to Bi^{209} to determine $\langle 1/r^3 \rangle$, Lindgren and Johansson derived a general expression for the quadrupole moment of any isotope of bismuth:

$$\frac{Q}{b} = 1.14 \times 10^{-3} \text{ barn}, \tag{12}$$

where b is in Mc/sec. With this result we find

$$\left| Q\,(Bi^{210}) \right| = 0.13 \pm 0.01 \text{ barn}, \tag{13}$$

where we have assigned the uncertainty somewhat arbitrarily but taken it large enough to embrace any corrections due to polarization of the electron cloud[28] or possible uncertainties in the above calculational procedure. Title and Smith have estimated the quadrupole moment of Bi^{209} in a slightly different way. They obtain $\langle 1/r^3 \rangle$ from the fine-structure separations. Using their method, we find the same result as above (within the quoted uncertainty).

HYPERFINE SEPARATIONS

The values of the hyperfine separations in RaE calculated from the above values of a and b and Eq. (3) are

$$\begin{aligned} \Delta\nu\,(5/2,\ 3/2) &= 194.93 \pm 0.09 \text{ Mc/sec} \\ \Delta\nu\,(3/2,\ 1/2) &= 220.19 \pm 0.08 \text{ Mc/sec} \end{aligned} \tag{14}$$

DISCUSSION

Bismuth-210 has 83 protons and 127 neutrons. The nuclear spins of Bi^{203}, Bi^{205}, and Bi^{209} are all known to be 9/2,[12] a fact consistent with the odd proton lying in the $h_{9/2}$ level. The state of the odd neutron is not known, but it could lie in one of the levels $g_{9/2}$, $i_{11/2}$, $g_{7/2}$ and couple with the proton to give a resultant spin of 1. In Table III we have listed for possibilities the magnetic moments of Bi^{210} calculated on the assumption that the proton and neutron parts of the core couple together in jj coupling. The magnetic moment can be written

$$\mu = \frac{1}{2}\left[(g_p + g_n)\, I + (g_p - g_n)\, \frac{j_p(j_p + 1) - j_n(j_n + 1)}{I + 1}\right] . \qquad (15)$$

Here g_p and g_n are the g factors of the odd proton and neutron, j_p and j_n are their angular momenta, and I is the nuclear spin. For the proton part, we have used $g_p = 0.9066$, an effective value derived from the known magnetic moment of Bi^{209}, for the neutron part, we have taken the Schmidt value for g_n in each case.

Table III. Calculated magnetic moments of Bi^{210} for different possible nuclear configurations

Presumed configuration		Calculated moment (nuclear magnetons)
$(\pi h_{9/2})$	$(\nu\, g_{9/2})$	0.24
$(\pi h_{9/2})$	$(\nu\, i_{11/2})$	-1.08
$(\pi h_{9/2})$	$(\nu\, g_{7/2})$	1.75

It appears that the most probable pure configuration if no mixing is assumed is $(\pi h_{9/2})(\nu g_{9/2})$. The experimental moment is so close to zero that we are not justified in presuming that it has the same sign as that calculated for the $(\ h_{9/2})(\nu g_{9/2})$ configuration, i.e. that it is positive.

Newby and Konopinski using pair-interaction considerations deduce the nuclear ground-state wave function of RaE to be[29]

$$\psi = 0.936 \left| h_{9/2}\, i_{9/2},\ J = 1 \right\rangle + 0.134 \left| h_{9/2}\, g_{9/2},\ J = 1 \right\rangle + 0.327 \left| f_{7/2}\ g_{9/2},\ J = 1 \right\rangle, \tag{16}$$

which is consistent with an energy separation of 0.047 Mev between the $J = 0$ and $J = 1$ states, the latter state being the lower. Using this wave function which has its major contribution from the term representing the $(\pi h_{9/2})(\nu i_{11/2})$ configuration, Newby and Konopinski have evaluated the nuclear moment to be $\mu = -0.75$ nm. This value is not in good agreement with the experimentally determined value of $|\mu| = 0.0442$ nm although it is possible that minor variation of the coefficients in Eq. (16) may improve the agreement.

Blin-Stoyle gives an expression for the quadrupole moment of an odd-odd nucleus on the single-particle model.[30] Assuming the configuration $(\pi h_{9/2})(\nu h_{9/2})$, we have evaluated this expression for Bi^{210} and find

$$Q(Bi^{210}) = 0.08 \text{ barn}. \tag{17}$$

If the positive sign of this quadrupole moment is taken to be correct, the sign of the magnetic moment of Bi^{210} is negative. We feel that no great faith should be put in this argument.

ACKNOWLEDGMENTS

The authors would like to express their appreciation to the Lawrence Radiation Laboratory Health Chemistry Division for considerable support during the course of this experiment and to Mr. John Padilla who aided us during many of the runs.

FOOTNOTES

*This work was done under the auspices of the U. S. Atomic Energy Commission and the U. S. Air Force Office of Scientific Research.

†Present address: The Cavendish Laboratory, Cambridge University, England.

1. A. G. Petschek and R. E. Marshak, Phys. Rev. 85, 698 (1952).
2. M. Yamada, Progr. Theoret. Phys. (Japan) 10, 253 (1953).
3. E. A. Plassmann and L. M. Langer, Phys. Rev. 96, 1593 (1954).
4. C. S. Wu, Proceedings of the International Glasgow Conference on Nuclear and Meson Physics, 1954 (Pergamon Press, Ltd, London 1955), p. 177.
5. P. R. Lewis, Phys. Rev. 108, 904 (1957).
6. J. Fujita, M. Yamada, Z. Matumoto, and S. Nakamura, Phys. Rev. 108, 1104 (1957).
7. A. Bincer, E. Church, and J. Weneser, Phys. Rev. Letters 1, 95 (1958).
8. A. I. Alikhanov, G. P. Eliseev, and V. A. Liubimov, Soviet Physics JETP 8, 740 (1959).
9. B. V. Geshkenbein, S. A. Nemirovskaya and A. P. Rudik, Nucl. Phys. 13, 60 (1959).

10. M. Fred, F. Tomkins, and R. Barnes, Phys. Rev. 92, 1324 (1953).

11. G. E. Lee-Whiting, Phys. Rev. 97, 463 (1955).

12. I. Lindgren and C. M. Johansson, Arkiv Fysik 15, 445 (1959).

13. R. G. Blin-Stoyle and M. A. Perks, Proc. Phys. Soc. (London) 67, 885 (1954).

14. The nuclear spin of RaE was measured at Cambridge University, England by R. S. Title and K. E. Smith and first reported at the Second Brookhaven Conference on Atomic Beams (1957).

15. N. F. Ramsey, Molecular Beams (Oxford University Press, New York, 1956), Chap. 9.

16. R. S. Title and K. F. Smith, Phil. Mag. 5, 1281 (1960).

17. For a discussion of this significance test, see R. A. Fisher, Statistical Methods for Research Workers (Oliver and Boyd, London, 1948).

18. H. L. Garvin, T. M. Green, E. Lipworth, and W. A. Nierenberg, Phys. Rev. 116, 393 (1959).

19. R. Marrus, W. A. Nierenberg, and J. Winocur, Phys. Rev. 120, 1429 (1960).

20. H. L. Garvin, T. M. Green, and E. Lipworth, Phys. Rev. 111, 534 (1958).

21. J. R. Zacharias, Phys. Rev. 61, 270 (1942).

22. W. G. Procter and F. C. Yu, Phys. Rev. 78, 471 (1950).

23. H. E. Walchli, A Table of Nuclear Moments, Oak Ridge National Laboratory Report ORNL-1469, Suppl. II, Feb. 1955 (unpublished work).

24. E. U. Condon and G. H. Shortley, Theory of Atomic Spectra (Cambridge University Press, London, 1959), p. 275.

25. D. B. Inglis and M. H. Johnson, Jr., Phys. Rev. 38, 1642 (1931).

26. H. Kopfermann, Nuclear Moments (Academic Press, New York, N. Y., 1958), p. 448.

27. G. Breit and L. A. Wills, Phys. Rev. 44, 470 (1933).

28. R. M. Sternheimer, Phys. Rev. 86, 316 (1952) and 95, 736 (1954).

29. N. Newby and E. J. Konopinski, Phys. Rev. 115, 434 (1959).

30. R. J. Blin-Stoyle. Theories of Nuclear Moments (Oxford University Press, London, 1957), p. 69.

This report was prepared as an account of Government sponsored work. Neither the United States, nor the Commission, nor any person acting on behalf of the Commission:

A. Makes any warranty or representation, expressed or implied, with respect to the accuracy, completeness, or usefulness of the information contained in this report, or that the use of any information, apparatus, method, or process disclosed in this report may not infringe privately owned rights; or

B. Assumes any liabilities with respect to the use of, or for damages resulting from the use of any information, apparatus, method, or process disclosed in this report.

As used in the above, "person acting on behalf of the Commission" includes any employee or contractor of the Commission, or employee of such contractor, to the extent that such employee or contractor of the Commission, or employee of such contractor prepares, disseminates, or provides access to, any information pursuant to his employment or contract with the Commission, or his employment with such contractor.