UCRL -9820

UNIVERSITY OF CALIFORNIA

Ernest O. Lawrence Radiation Laboratory

TWO-WEEK LOAN COPY

This is a Library Circulating Copy which may be borrowed for two weeks. For a personal retention copy, call Tech. Info. Division, Ext. 5545

BERKELEY, CALIFORNIA

DISCLAIMER

This document was prepared as an account of work sponsored by the United States Government. While this document is believed to contain correct information, neither the United States Government nor any agency thereof, nor the Regents of the University of California, nor any of their employees, makes any warranty, express or implied, or assumes any legal responsibility for the accuracy, completeness, or usefulness of any information, apparatus, product, or process disclosed, or represents that its use would not infringe privately owned rights. Reference herein to any specific commercial product, process, or service by its trade name, trademark, manufacturer, or otherwise, does not necessarily constitute or imply its endorsement, recommendation, or favoring by the United States Government or any agency thereof, or the Regents of the University of California. The views and opinions of authors expressed herein do not necessarily state or reflect those of the United States Government or any agency thereof or the Regents of the University of California.

To be submitted to Phys. Rev. Letters

UCRL-9820

UNIVERSITY OF CALIFORNIA

Lawrence Radiation Laboratory
Berkeley, California

Contract No. W-7405-eng-48

ASYMMETRY PARAMETERS IN THE DECAYS $\Sigma^+ \rightarrow p + \pi^0$ AND $\Lambda \rightarrow p + \pi^-$

E. F. Beall, Bruce Cork, D. Keefe, P. G. Murphy, and W. A. Wenzel

August 22, 1961

ASYMMETRY PARAMETERS IN THE DECAYS $\Sigma^+ \to p + \pi^0$ AND $\Lambda \to p + \pi^-$ *

E. F. Beall, Bruce Cork,† D. Keefe, P. G. Murphy,‡ and W. A. Wenzel

Lawrence Radiation Laboratory
University of California
Berkeley, California

August 22, 1961

In recent years, several authors have proposed theories that predict, either on the basis of various forms of global symmetry and the $|\Delta \vec{T}| = 1/2$ rule,[1-6] or on the basis of extended chirality invariance,[7] that the asymmetry parameters in the decays $\Sigma^+ \to p + \pi^0 (\alpha_0)$ and $\Lambda \to p + \pi^- (\alpha_\Lambda)$ should obey the relations $\alpha_0 \approx - \alpha_\Lambda$. Here we have

$$\alpha = \frac{2\mathrm{Re}\,[S^* P]}{|S|^2 + |P|^2},$$

where S and P are the amplitudes for the two possible angular-momentum channels in each decay. Other theories predict the same sign for α_0 and α_Λ.[8,9] Asymmetry measurements have shown $|\alpha_0|$ and $|\alpha_\Lambda|$ to be large.[10-12] Two published measurements of the sign of α_Λ are in disagreement.[13,14] The experiment reported in this letter was designed to establish the signs and magnitudes of both α_0 and α_Λ by measuring the polarization of the decay proton from $\Sigma^+ \to p + \pi^0$ and $\Lambda \to p + \pi^-$ with a carbon-plate spark chamber.

Figure 1 shows the apparatus used in the experiment. Positive pions of 1.19-Bev/c momentum from the Bevatron were incident upon a liquid-hydrogen target, producing the reactions $\pi^+ + p \to \Sigma^+ + K^+$, $\Sigma^+ \to p + \pi^0$. During approximately one-third of the run, the hydrogen target was replaced by a block of lithium deuteride. In this case, π^+ mesons of 1.02-Bev/c momentum produced the reactions $\pi^+ + n \to \Lambda + K^+$, $\Lambda \to p + \pi^-$. The production of a Σ^+ or Λ hyperon

was indicated as in earlier experiments[10] by the identification of a K^+ with a counter telescope, including detection of the decay of the K^+ in the large water Cerenkov counter C_K. The hollow-plate spark chamber in the K^+ telescope and the carbon-plate "proton" spark chamber were triggered by a coincidence between the K^+ telescope signal, the signal from the "proton" counter telescope that detected particles with $v/c < 0.75$ entering the carbon-plate chamber, and the pulse from a gas Cerenkov counter which was located in the incident beam to detect the π^+ meson. Two 90-deg stereo views of each chamber were then photographed. The U and D counters detected those π^- mesons from Λ decay that went approximately up or down with respect to the production plane.

All Σ^+ events with a single proton scattering in the carbon plates of greater than 3-deg projected angle in either view were measured. (Only those events with greater than 5 deg in either view were used in the analysis.) The measured K^+ and proton space angles and proton range allowed us to make a once-overdetermined kinematical fit to the Σ^+ production and decay. The scattering angle and residual range were used to determine the analyzing power of carbon for each event, with the analyzing-power data which have been summarized by Birge and Fowler.[13] Acceptance criteria involving goodness of kinematical fit, maximum and minimum scattering angle, and scattering within a fiducial region of the chamber were imposed. Out of approximately 25,000 pictures, 358 events satisfied all the acceptance criteria and were used as data.

If the polarization of the hyperon is nonzero, the helicity of the decay proton is no longer minus α.[15] However, we have

$$\left[\frac{N(\theta)p_V(\theta) - N(\pi-\theta)p_V(\pi-\theta)}{N(\theta) + N(\pi-\theta)}\right] = -\alpha\cos\theta,$$

where θ is the angle between the proton momentum and the normal to the Σ-K production plane, $p_V(\theta)$ is the polarization of the proton perpendicular to the production plane, and $N(\theta)$ is the number of events. Similarly, we have[16]

$$\left[\frac{N(\theta)p_H(\theta) + N(\pi-\theta)p_H(\pi-\theta)}{N(\theta) + N(\pi-\theta)}\right] = -\,a\cos\psi,$$

where ψ is the angle between the proton momentum and the direction in the Σ-K production plane which is perpendicular to the hyperon momentum. All of the above quantities refer to the hyperon rest frame. We have used the approximations that the proton and hyperon momenta are parallel in the laboratory system and that the polarization of the proton is the same in the hyperon rest frame as it is in the laboratory system. Therefore, the likelihood functions

$$L_V(a) = \prod_{i=1}^{358} (1 - a\cos\theta_i A_i \cos\phi_{S_i}),$$

and

$$L_H(a) = \prod_{i=1}^{358} (1 - a\cos\psi_i A_i \sin\phi_{S_i})$$

were computed. Here, A is the carbon analyzing power and ϕ_S is the angle between the plane scattering and the Σ-K production plane. The common logarithms of $L_V(a)$, $L_H(a)$, and $L(a) = L_V(a)L_H(a)$ are plotted in Fig. 2. It should be noted that $L_V(a)$ and $L_H(a)$ independently imply that a_0 is positive. The combined data give $a_0 = +0.75 \pm .17$. Corrections for systematic effects have not been included. This value for a_0 agrees well with the lower limit for $|a_0|$ obtained from a measurement of $a_0\bar{p}_\Sigma$ by Cork et al.[10]

Because of the Fermi momentum of the target neutron, we could not use precise kinematical fitting on the Λ events. Therefore, the U and D counters were used to determine whether the π^- meson went up or down with respect to the $K^+ - \pi^+$ plane, and a measurement of the polarization of the proton perpendicular to this plane correlated with the presence of a U or D count allowed a determination of the sign of α from the relation

$$\left[\frac{N_D\langle p_V\rangle_D - N_U\langle p_V\rangle_U}{N_D + N_U}\right] = -\alpha\,\langle\cos\theta\rangle,$$

with averages taken over all proton directions. From measurements of $\alpha_\Lambda \bar{P}_\Lambda$ by Crawford et al.,[11] it is known that $|\alpha_\Lambda| > 0.75 \pm .17$. If it is assumed that $|\alpha_\Lambda| > 0.6$, a maximum-likelihood analysis of our data indicates that α_Λ is negative with a confidence of at least 25:1. This result disagrees with the early experiment of Boldt et al.[14], but agrees with the recent experiments by Birge and Fowler,[13] and Leitner et al.[17] Thus, the evidence that α_Λ is large and negative is now quite strong.

The above results imply:

a. The predictions by Nakamura and Konuma[7] that $\alpha_0 < 0$ and that $\alpha_\Lambda > 0$ are in disagreement with experiment.

b. The phenomenological theory by Bludman,[8] which predicts $\alpha_\Lambda \approx +\alpha_0$, is in disagreement with experiment.

c. The S-wave bound-pion model of Barshay and Schwartz,[9] which has been quoted as evidence for odd Σ-Λ relative parity,[18] is also in disagreement with experiment.

d. The evidence that $\alpha_{(\Xi^- \to \Lambda + \pi^-)}$ is positive[19] is strengthened.

e. A fundamental prediction of the global (or doublet) symmetry theories,[1-6] viz. $\alpha_\Lambda \approx -\alpha_0$, is now confirmed.[20]

We are grateful to the many persons who assisted in the building of the equipment, the setting up and operation of the experiment, and the analysis of the data.

FOOTNOTES

*Work done under the auspices of the U. S. Atomic Energy Commission.

†Now on leave of absence at the European Organization for Nuclear Research (CERN), Geneva, Switzerland.

‡Work done while on leave from the Rutherford High Energy Laboratory, Harwell, Didcot, England.

1. R. F. Sawyer, Phys. Rev. 112, 2135 (1958).
2. B. d'Espagnat and J. Prentki, Phys. Rev. 114, 1366 (1959).
3. S. B. Treiman, Nuovo cimento 15, 916 (1960).
4. G. Feldman, P. T. Matthews, and A. Salam, Phys. Rev. 121, 302 (1961).
5. L. Wolfenstein, Phys. Rev. 121, 1245 (1961).
6. A. Pais, Phys. Rev. 122, 317 (1961).
7. S. Nakamura and M. Konuma, Phys. Rev. 122, 1620 (1961).
8. S. A. Bludman, Phys. Rev. 115, 468 (1959).
9. S. Barshay and M. Schwartz, Phys. Rev. Letters 4, 618 (1960).
10. R. L. Cool, B. Cork, J. W. Cronin, and W. A. Wenzel, Phys. Rev. 114, 912 (1959); B. Cork, L.T. Kerth, W. A. Wenzel, J. W. Cronin, and R. L. Cool, Phys. Rev. 120, 1000 (1960).
11. F. S. Crawford, Jr., M. Cresti, M. L. Good, F. T. Solmitz, M. L. Stevenson, and H. K. Ticho, Phys. Rev. Letters 2, 174 (1959).
12. F. Eisler, R. J. Plano, A. G. Prodell, N. P. Samios, M. Schwartz, J. Steinberger, P. Bassi, V. Borelli, G. Puppi, G. Tonaka, P. Waloschek, V. Zoboli, M. Conversi, P. Franzini, I. Mannelli, R. Santangelo, and V. Silvestrini, Phys. Rev. 100, 1353 (1957).

13. R. W. Birge and W. B. Fowler, Phys. Rev. Letters 5, 254 (1960).

14. E. Boldt, H. S. Bridge, D. O. Caldwell, and Y. Pal, Phys. Rev. Letters 1, 256 (1958).

15. The general polarization formula has been given, for example, by T. D. Lee and C. N. Yang, Phys. Rev. 108, 1654 (1957).

16. This relation is rigorous only for $\beta\bar{p}_{\Sigma} = 0$, where $\beta = 2\mathrm{Im}(S^*P)/|S|^2 + |P|^2$. However, β is expected to be small if time-reversal invariance holds.

17. J. Leitner, L. Gray, E. Harth, S. Lichtman, M. Block, B. Brucker, A. Engler, R. Gessaroli, A. Kovacs, T. Kikuchi, C. Meltzer, H. O. Cohn, W. Bugg, A. Pevsner, P. Schlein, M. Meer, N. T. Grinellini, L. Lendinara, L. Monari, and G. Puppi, Office of Naval Research Report No. 61-4, July 1, 1961 (unpublished).

18. Y. Nambu and J. J. Sakurai, Phys. Rev. Letters 6, 377 (1961).

19. W. B. Fowler, R. W. Birge, P. Eberhard, R. Ely, M. L. Good, W. M. Powell, and H. K. Ticho, Phys. Rev. Letters 6, 134 (1961).

20. However, the prediction by d'Espagnat and Prentki (Ref. 2) and Treiman (Ref. 3) that $\alpha_{(\Xi^- \to \Lambda + \pi^-)}$ and $\alpha_{(\Lambda \to p + \pi^-)}$ have the same sign seems excluded by the results of Fowler et al. (Ref. 18).

FIGURE CAPTIONS

Fig. 1. Plan view of the apparatus used in the experiment. Hyperons were produced either in the H_2 target or in the LiD target. Scintillation counters S_1, S_3, and S_5 detected the K^+ meson; S_2, S_4, and S_6 are scintillation counters that detected the decay proton. The 2-in. water Cerenkov counters C_1, C_2, and C_3 were used to reject particles with $v/c > 0.75$. The water Cerenkov counter C_K stopped the K^+ and detected its decay particle; scintillation counter S_A rejected events not originating in the target; scintillation counters U and D detected pions from Λ decay. The K spark chamber consists of five 1-in. hollow plates with 0.003-in. aluminum surfaces. The proton spark chamber consists of four 1-in. hollow plates and 49 0.5-in. graphite plates sprayed with silver paint. Both chambers were filled with argon.

Fig. 2. Common logarithms of the likelihood functions $L_V(\alpha) = \Pi_i(1-\alpha A_i \cos\theta_i \cos\phi_{S_i})$, $L_H(\alpha) = \Pi_i(1-\alpha A_i \cos\psi_i \sin\phi_{S_i})$, and $L(\alpha) = L_V(\alpha)\, L_H(\alpha)$ for $\Sigma^+ \rightarrow p + \pi^0$.

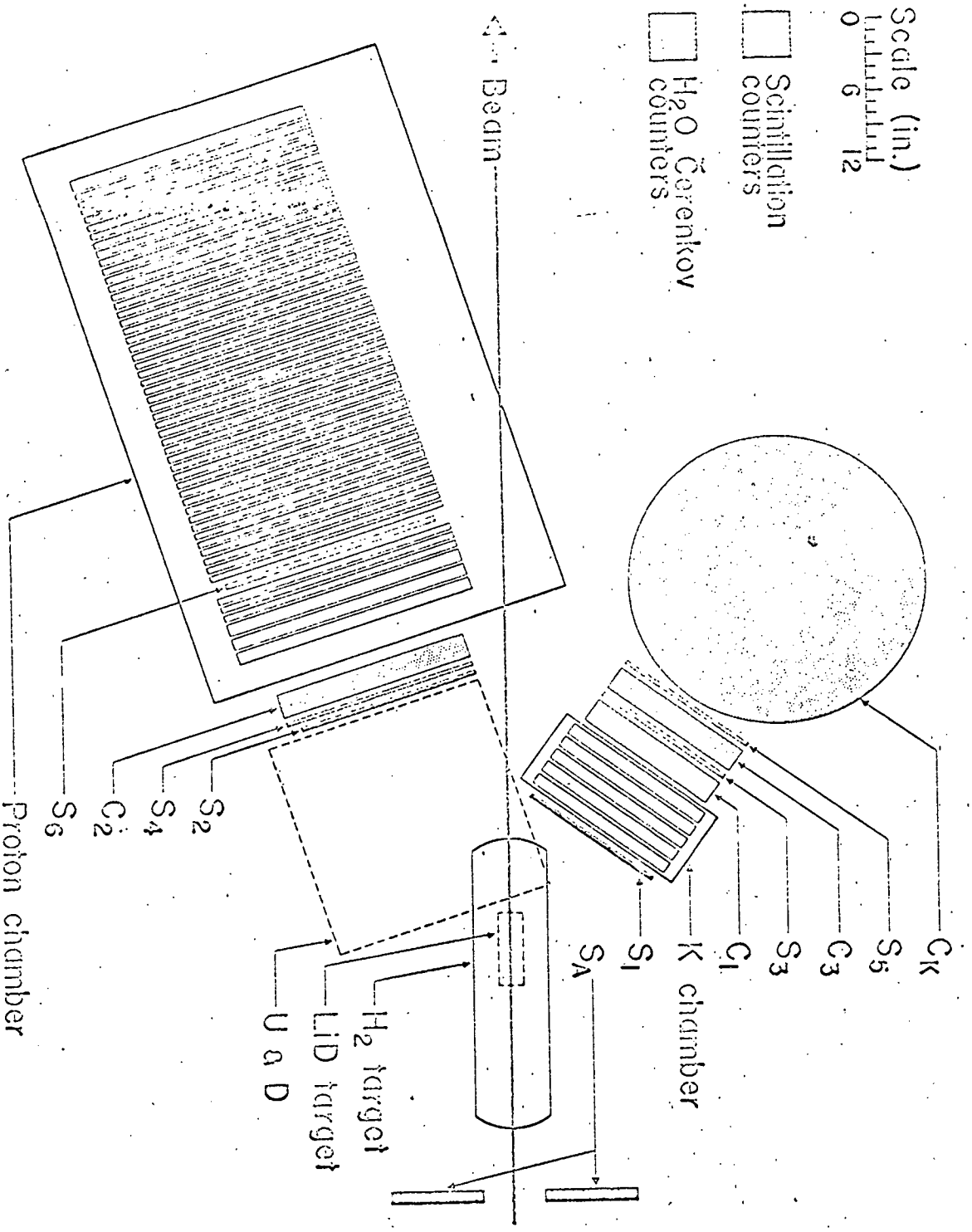
Scale (in.)
0
6
12
Scintillation counters
H_2O Čerenkov counters
Beam
C_K
S_5
C_3
S_3
C_1
K chamber
S_1
S_A
H_2 target
LiD target
U a D
S_2
S_4
C_2
S_6
Proton chamber

Fig. 1

MUB-704

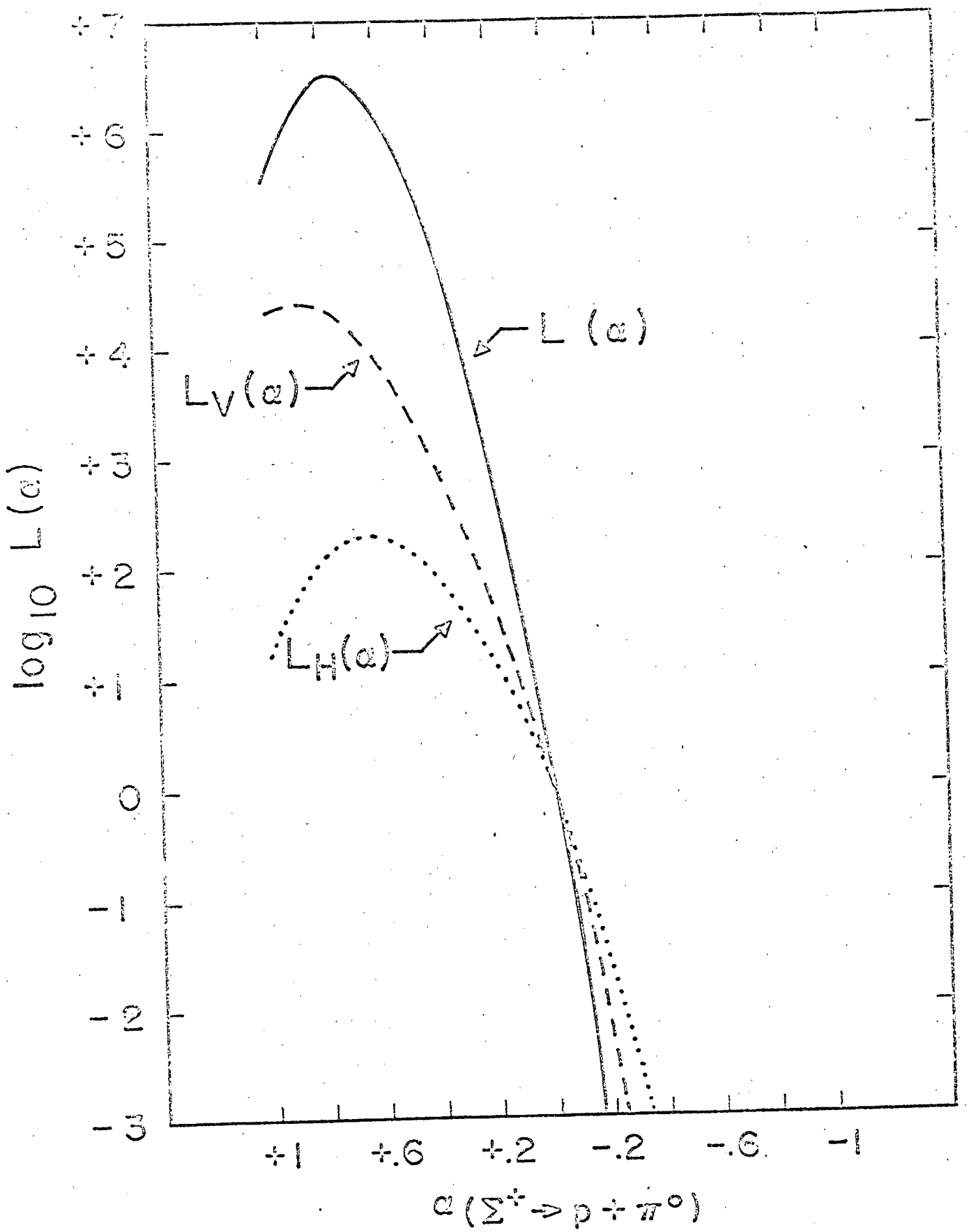

Fig. 2

MU-24274