UCRL-9830
c.2 repl.

UNIVERSITY OF CALIFORNIA
Lawrence Radiation Laboratory
Berkeley, California
Contract No. W-7405-eng-48

RECEIVED
LAWRENCE
BERKELEY LABORATORY

AUG 21 1987

LIBRARY AND
DOCUMENTS SECTION

ENERGY LEVELS OF ErII

B. R. Judd and L. C. Marquet

August 1961

TWO-WEEK LOAN COPY
This is a Library Circulating Copy
which may be borrowed for two weeks.

UCRL-9830 c.2
repl.

DISCLAIMER

This document was prepared as an account of work sponsored by the United States Government. While this document is believed to contain correct information, neither the United States Government nor any agency thereof, nor the Regents of the University of California, nor any of their employees, makes any warranty, express or implied, or assumes any legal responsibility for the accuracy, completeness, or usefulness of any information, apparatus, product, or process disclosed, or represents that its use would not infringe privately owned rights. Reference herein to any specific commercial product, process, or service by its trade name, trademark, manufacturer, or otherwise, does not necessarily constitute or imply its endorsement, recommendation, or favoring by the United States Government or any agency thereof, or the Regents of the University of California. The views and opinions of authors expressed herein do not necessarily state or reflect those of the United States Government or any agency thereof or the Regents of the University of California.

ENERGY LEVELS OF ErII

B. R. Judd and L. C. Marquet
Lawrence Radiation Laboratory and Department of Physics
University of California, Berkeley, California

August 1961

ABSTRACT

Eight low-lying levels of ErII $4f^{12}6s$ have been observed to be grouped according to their energy in four close pairs. The centers of gravity of the pairs correspond to the energies of the four lowest levels of the core $4f^{12}$; the spacings between the two components of the pairs depend on the Coulomb interaction between the s electron and core, and are determined by the single Slater integral $G^3(4f,6s)$. The levels of the core can be fitted very closely with integrals $F_k(4f,4f)$ whose ratios one to another are the same as those for a hydrogenic 4f eigenfunction. The integral $F_2(4f,4f)$ is found to be 427 cm^{-1}, and ζ_f, the spin-orbit coupling constant, 2237 cm^{-1}. The spacings are fitted moderately well by a value of 1580 cm^{-1} for G^3; discrepancies are ascribed to configuration interaction. The g values of the levels are found to agree closely with those calculated on the basis of perfect Jj coupling.

ENERGY LEVELS OF ErII*

B. R. Judd and L. C. Marquet
Lawrence Radiation Laboratory and Department of Physics
University of California, Berkeley, California

August 1961

I. INTRODUCTION

Low-lying configurations of the type $4f^n6s$ are a common feature of singly-ionized rare earth atoms. Energy levels belonging to such configurations have long been known for CeII,[1] PrII,[2] NdII,[3] SmII,[4] and TmII.[5] More recently, McNally and Vander Sluis have located eight low levels of $4f^{12}6s$ in ErII.[6] For every one of these ions, the f electrons lie well in the interior; the s electron, on the other hand, spends most of its time in the outer closed shells of the ion. If there were no interaction between the s electron and the core of f electrons, the energy levels of the combined system could be obtained by simply superposing the energy levels of the outer electron on every level of the core. Since the energy-level structure of an s electron comprises merely $^2S_{1/2}$, the resulting energy-level scheme would be identical to that of the core, but owing to the two possible orientations $m_s = \pm 1/2$ of the spin of the s electron, the degeneracy of each level would be doubled. The Coulomb interaction H between the s electron and the core partly removes this degeneracy, and corresponding to each level of the core (save any with zero angular momentum), two levels appear in the energy level scheme of the entire atom. Usually the Coulomb interaction is sufficiently small to make this doubling easy to discern; this is particularly so for ErII $4f^{12}6s$, where the large spin-orbit coupling constant ζ for an f electron produces large separations in the levels of the core. If, for the moment, we label the total angular momenta of the core and the s electron by J and j, respectively, we can say that Jj coupling is an

excellent approximation for the configuration $f^{12}s$. This fact, coupled with the possibility of finding important parameters for the core of f electrons, makes the data of McNally and Vander Sluis very attractive to analyze.

II. LEVELS OF THE CORE

The positions of the eight levels so far found for ErII $4f^{12}6s$ are given in Table I. To distinguish between quantities that refer to the core and those that refer to the combined system of core plus s electron, we use odd and even subscripts respectively. The symbol J_2 in Table I thus stands for the quantum number of the total angular momentum of the entire electron system. With respect to their energy, the eight levels form four close pairs; the corresponding values of J_1, the total angular-momentum quantum number for the levels of the core f^{12}, are 4, 5, 4, and 6. As a preliminary problem, we must obtain the eigenfunctions of these core levels.

Table I. Observed levels in ErII.

J_2	Energy (cm^{-1})	Separation of components, Δ
9/2	11042.8	148.7
7/2	10894.1	
9/2	7195.4	45.7
11/2	7149.7	
7/2	5403.9	271.2
9/2	5132.7	
11/2	440.4	440.4
13/2	0.0	

The positions of the levels of f^{12} depend on the three Slater integrals F_2, F_4, and F_6 and the spin-orbit coupling constant ζ. Since the experimental data provide only three energy separations for the core levels, these parameters cannot be unambiguously determined. However, for triply ionized rare earth atoms it has been observed that the ratios of the integrals F_k, one to another for a given ion, are very similar to those for a hydrogenic 4f radial eigenfunction.[7] This approximation is particularly good for late members of the rare earth series. If the same assumption is made here, we have only two parameters at our disposal, namely F_2 and ζ. The matrix elements of the Coulomb interaction for f^{12} are identical to the corresponding ones for the conjugate configuration f^2, and may be obtained from Condon and Shortley.[8] The matrix elements of the spin-orbit interaction

$$\zeta \sum_{i=1}^{12} \underset{\sim}{s}_i \cdot \underset{\sim}{\ell}_i$$

are opposite in sign to the corresponding ones for f^2. The latter may be found from the paper by Spedding;[9] we note, however, that Spedding's ζ is one-half that used by us. The secular determinants for the energies of the levels of f^{12} contain at most three rows and columns, and therefore can be diagonalized exactly without too much trouble. With $F_2 = 427.0$ cm^{-1} and $\zeta = 2237$ cm^{-1}, we obtain the results in Table II. It can be seen that the calculated levels agree extremely well with the weighted means of the pairs of levels in Table I.

In view of the internal nature of the 4f electrons, their properties should be virtually unaltered if a second s electron is added to ErII $f^{12}s$. In their analysis of the Zeeman effects in rare earth atoms, Judd and Lindgren[10] used $F_2 = 409$ cm^{-1} and $\zeta = 2242$ cm^{-1} for the neutral atom ErI $f^{12}s^2$. The agreement with the corresponding quantities for ErII $f^{12}s$ is extremely good, and confirms that the interpretation of the energy-level scheme of this ion is correct.

Table II. Levels of the core f^{12}.

Principal component of level	Eigenfunction	Energy (cm^{-1}) Calculated	Weighted means of observed pairs
$^1G_4$	$0.3306\|^3F_4)-0.7536\|^1G_4)-0.5680\|^3H_4)$	18183	---
$^3F_3$	$\|^3F_3)$	12892	---
$^3H_4$	$0.5541\|^3F_4)-0.3322\|^1G_4)+0.7633\|^3H_4)$	10985	10977
$^3H_5$	$\|^3H_5)$	7169	7170
$^3F_4$	$0.7639\|^3F_4)+0.5671\|^1G_4)-0.3078\|^3H_4)$	5236	5253
$^3H_6$	$0.9960\|^3H_6)+0.0885\|^1I_6)$	213	203

III. THE ADDITION OF THE s ELECTRON

In view of the close approximation to Jj coupling, the eigenfunctions of the levels of the combined system of core plus s electron can be constructed by coupling the s electron directly to the eigenfunctions of Table II. For example, the eigenfunction corresponding to the level at 11042.8 cm^{-1} should be quite accurately given by

$$0.5541|^3F_4,\ s,\ 9/2) - 0.3322|^1G_4,\ s,\ 9/2) + 0.7633|^3H_4,\ s,\ 9/2).$$

In order to estimate the spacing between the two J_2 levels deriving from a given core level labeled by J_1, we need to know matrix elements of the Coulomb interaction H between states of the type

$$|f^{12}\ S_1\ L_1\ J_1,\ s,\ J_2).$$

These have been derived by Judd[11] from the well-known results in the LS coupling extreme (see, for example, Slater[12]). Between states of a given J_1, we have

$$(f^{12}\ S_1\ L_1\ J_1,\ s,\ J_2|H|\ f^{12}\ S_3\ L_3\ J_1,\ s,\ J_2)$$

$$= \pm\ \delta\ (S_1,\ S_3)\delta(L_1,\ L_3)\ G_3\ [L_1(L_1+1)-\ S_1(S_1+1)-\ J_1(J_1+1)]/7(2J_2+1),$$

where the plus sign is to be taken for $J_2 = J_1+1/2$, and the minus sign for $J_2 = J_1-1/2$. The occurrence of $2J_2+1$ in the denominator shows that, to first order, the center of gravity of the pair of levels for which $J_2 = J_1 \pm 1/2$ coincides with the corresponding core levels, and justifies our taking weighted means for the final column of Table II. The formula

$$(f^{12}\ S_1\ L_1\ J_2+1/2,\ s,\ J_2|H|f^{12}\ S_3\ L_3\ J_2-1/2,\ s,\ J_2)$$

$$= \delta(S_1,\ S_3)\delta(L_1,\ L_3)[G^3/7(2J_2+1)]$$

$$\times\ [(S_1+L_1+J_2+3/2)(S_1+L_1+1/2-J_2)(L_1+J_2+1/2-S_1)(S_1+J_2+1/2-L_1)]^{1/2}$$

enables us to take into account the perturbing effects of levels that derive from different core levels. The quantity G^3 is a contraction of the Slater integral $G^3(4f,6s)$.

It is at once apparent that the matrix elements of the Coulomb interaction H depend on a single parameter, G^3. In principle, it should therefore be possible to fit the four separations Δ of Table I at a single stroke. The situation is complicated slightly by the perturbing effects of adjacent levels. Fortunately, second-order perturbation theory is a sufficiently good approximation to cope with this problem, and a least-squares fit between the experimental and theoretical values for Δ leads to $G^3 = 1580\ cm^{-1}$. The details of the calculations are represented graphically in Fig. 1, and the final comparisons of Δ are given in Table III. Although the agreement between experiment

Table III. Spacings between pairs of levels

Core level	Δ (cm^{-1}) Calculated	Observed
$^3H_4$	110.7	148.7
$^3H_5$	55.1	45.7
$^3F_4$	254.9	271.2
$^3H_6$	472.2	440.4

and theory is quite good, it is perhaps a little surprising that it is not even better, particularly in view of the close correspondence between the last two columns of Table II. Unless, by some remote chance, this correspondence is fortuitous, and the ratios between the integrals F_k show marked deviations from the hydrogenic values, the discrepancies must be ascribed to configuration interaction. The configuration f^2d has been observed[1] to overlap f^2s in CeII, and it seems likely that low-lying levels of $f^{12}d$ are responsible for the differences between the calculated and theoretical values of Δ.

IV. g VALUES

If the angular momenta $\underset{\sim}{J}_1$ and $\underset{\sim}{j}$ of the two parts of a Jj coupled system form a resultant $\underset{\sim}{J}_2$, then the Landé g value of a level labeled by J_2 is given by

$$g = g(J_1)\,\frac{J_2(J_2+1) + J_1(J_1+1) - j(j+1)}{2J_2(J_2+1)} + g(j)\,\frac{J_2(J_2+1) + j(j+1) - J_1(J_1+1)}{2J_2(J_2+1)},$$

where $g(J_1)$ and $g(j)$ denote the Landé g values of the levels of the two parts of the system corresponding to the quantum numbers J_1 and j. A simple derivation of this formula has been given by Van den Bosch.[13] For the levels of ErII $4f^{12}6s$, we set $j=1/2$, $g(j)=2$; the formula for g now reduces to

$$g = [(2J_2+3)g(J_1)-2]/(2J_2+2)$$

for $J_1 = J_2+1/2$, and to

$$g = [(2J_2-1)g(J_1)+2]/2J_2$$

for $J_1 = J_2-1/2$. Values of $g(J_1)$ can be found from the eigenfunctions of Table II, and it is a simple matter to calculate g for the cases of interest. The results are shown in Table IV. The column headed g_{ls} includes the g values calculated by McNally and Vander Sluis[6] on the basis of LS coupling. It can be seen that those corresponding to Jj coupling are in much closer accord with experiment.

The corrections to the g values resulting from deviations from perfect Jj coupling can be estimated by straightforward tensor-operator techniques. A few trial calculations reveal that they are of the order of 0.001, and the discrepancy of 0.033 in $g(^3H_4, s, 9/2)$, like the discrepancies of Table III, must be ascribed to configuration interaction. In common

with many atomic spectroscopists, McNally and Vander Sluis do not assign limits of error to their observations; we are therefore unable to decide whether discrepancies in Table IV of the order of 0.01 are significant or not.

Table IV. Landé g values

Principal component of core level	$g(J_1)$	J_2	g calculated	g observed	g_{1s}
$^3H_4$	0.9602	9/2	1.078	1.045	0.970
		7/2	0.847	0.837	0.667
$^3H_5$	1.0333	9/2	0.945	0.942	0.909
		11/2	1.121	1.110	1.133
$^3F_4$	1.1267	7/2	1.030	1.038	1.143
		9/2	1.224	1.234	1.333
$^3H_6$	1.1654	11/2	1.101	1.092	1.091
		13/2	1.230	1.225	1.231

5. CONCLUSION

In the analysis described above we have succeeded in accounting for the positions and g values of eight low levels of ErII $4f^{12}6s$. The whole treatment amounts to an exercise in coupling angular momenta, since all the radial integrals have been regarded as disposable parameters. It should be pointed out that the value for G^3, namely 1580 cm^{-1}, has been chosen to give the best over-all fit, and would not necessarily remain unaltered if configuration interaction were taken into account. The separation of the two levels that derive from the lowest core level $^3H_6$ leads to $G^3 = 1485$ cm^{-1}. Since these levels are probably the least affected by configuration interaction, this figure for G^3 may be the more accurate. Although we have been concerned exclusively with ErII $4f^{12}6s$, it is clear that similar analyses could be made of other configurations of the type $f^n s$. In view of the correspondence between the levels of f^{12} and f^2, an obvious choice for such an extension is CeII $4f^2 6s$.

REFERENCES

* Part of this work was done under the auspices of the U. S. Atomic Energy Commission.

1. G. R. Harrison, W. E. Albertson, and N. F. Hosford, J. Opt. Soc. Am. 31, 439 (1941).

2. N. Rosen, G. R. Harrison, and J. R. McNally, Jr., Phys. Rev. 60 722 (1941).

3. W. E. Albertson, G. R. Harrison, and J. R. McNally, Jr., Phys. Rev. 61, 167 (1942).

4. W. E. Albertson, Astrophys. 84, 26 (1936).

5. W. F. Meggers, J. Opt. Soc. Am. 31, 157 (1941).

6. J. R. McNally and K. L. Vander Sluis, J. Opt. Soc. Am. 49, 200 (1959).

7. B. G. Wybourne and W. A. Runciman, J. Chem. Phys. 30, 1154 (1959).

8. E. U. Condon and G. H. Shortley, Theory of Atomic Spectra (Cambridge University Press, 1935).

9. F. H. Spedding, Phys. Rev. 58, 255 (1940).

10. B. R. Judd and I. Lindgren, Phys. Rev. 122, 1802 (1961).

11. B. R. Judd, Low-Lying Levels in Certain Actinide Atoms, Lawrence Radiation Laboratory Report UCRL-9779, July 6, 1961.

12. J. C. Slater, Quantum Theory of Atomic Structure, Vol. II (McGraw-Hill Publishing Co., New York, 1960).

13. J. C. Van den Bosch, Handbuch der Physik, Vol. 28 (Springer-Verlag, Berlin, 1957) p. 305.

LEGEND

Fig. 1. Schematic representation of the low levels of ErII $4f^{12}6s$. On the far left are the core levels of $4f^{12}$. They are split into pairs by the Coulomb interaction between the 6s electron and the core; the numbers outside the pairs give the appropriate values of J_2; the numbers inside, the separations of the components in cm^{-1} as determined from first-order perturbation theory. The perturbing effects of levels with the same J_2 on one another have been calculated by second-order perturbation theory, and the elevations and depressions (in cm^{-1}) corresponding to pairs of interacting levels are indicated. Displacements shown are very much exaggerated. The final separations are given on the extreme right, and correspond to column 2 of Table III.

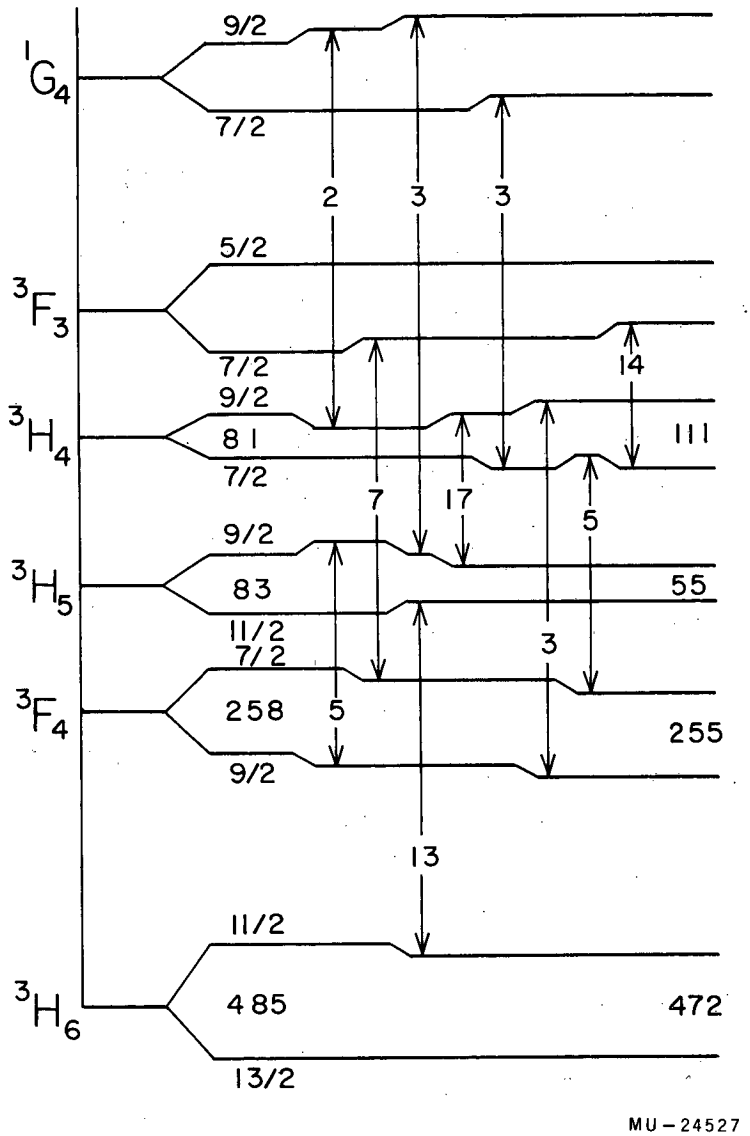
$^1G_4$
9/2
7/2
2
3
3
$^3F_3$
5/2
7/2
14
$^3H_4$
9/2
81
7/2
111
7
17
5
$^3H_5$
9/2
83
11/2
55
3
$^3F_4$
7/2
258
5
9/2
255
13
$^3H_6$
11/2
485
13/2
472
MU-24527

Fig. 1

This report was prepared as an account of Government sponsored work. Neither the United States, nor the Commission, nor any person acting on behalf of the Commission:

A. Makes any warranty or representation, expressed or implied, with respect to the accuracy, completeness, or usefulness of the information contained in this report, or that the use of any information, apparatus, method, or process disclosed in this report may not infringe privately owned rights; or

B. Assumes any liabilities with respect to the use of, or for damages resulting from the use of any information, apparatus, method, or process disclosed in this report.

As used in the above, "person acting on behalf of the Commission" includes any employee or contractor of the Commission, or employee of such contractor, to the extent that such employee or contractor of the Commission, or employee of such contractor prepares, disseminates, or provides access to, any information pursuant to his employment or contract with the Commission, or his employment with such contractor.