UCRL-9893

UNIVERSITY OF CALIFORNIA

Lawrence Radiation Laboratory
Berkeley, California

Contract No. W-7405-eng-48

CRYSTAL AND MOLECULAR STRUCTURE OF TRIETHYLSCARPHANE

T. N. Margulis and David H. Templeton

October, 1961

DISCLAIMER

This document was prepared as an account of work sponsored by the United States Government. While this document is believed to contain correct information, neither the United States Government nor any agency thereof, nor the Regents of the University of California, nor any of their employees, makes any warranty, express or implied, or assumes any legal responsibility for the accuracy, completeness, or usefulness of any information, apparatus, product, or process disclosed, or represents that its use would not infringe privately owned rights. Reference herein to any specific commercial product, process, or service by its trade name, trademark, manufacturer, or otherwise, does not necessarily constitute or imply its endorsement, recommendation, or favoring by the United States Government or any agency thereof, or the Regents of the University of California. The views and opinions of authors expressed herein do not necessarily state or reflect those of the United States Government or any agency thereof or the Regents of the University of California.

CRYSTAL AND MOLECULAR STRUCTURE OF TRIETHYLSCARPHANE[1]

T. N. Margulis and David H. Templeton
Department of Chemistry
and
Lawrence Radiation Laboratory
University of California
Berkeley, California

October, 1961

ABSTRACT

The crystal structure of triethylscarphane, the compound formed upon addition of CS_2 to $P(C_2H_5)_3$, has been determined from three-dimensional x-ray diffraction data. The structure is monoclinic, space group $P2_1/c$, with a = 7.50 ± 0.02, b = 11.97 ± 0.02, and c = 13.82 ± 0.05 Å; $\beta = 123.1^\circ \pm 0.2^\circ$, Z = 4. The compound is not a loose molecular complex but rather a zwitterion of a quaternary phosphonium derivative of dithioformate, $(CH_3CH_2)_3P^+\text{-}CSS^-$. The phosphorus atom is bound nearly tetrahedrally to four carbon atoms (three from the ethyl groups and one from the CS_2) with bond lengths averaging 1.80 Å. The carbon-sulphur bonds average 1.69 Å and the S-C-S bond angle is 128.0°. Uncertainties are about 0.03 Å for bond lengths and about 2° for bond angles.

INTRODUCTION

In a previous communication[2] we reported the structure of the compound formed by the addition of carbon disulfide to triethylphosphine. The structure which we reported corresponds to a zwitterion of a quaternary phosphonium derivative of dithioformate, $(CH_3CH_2)_3P^+\text{-}CSS^-$, as proposed by Jensen[3], rather than the loose molecular complex which Issleib and Branck[4] concluded it to be in a review of the conflicting proposals on its structure. We have given the compound the trivial name "triethylscarphane". In the present paper the details of the structure determination are presented as well as the further refinement of the structure.

EXPERIMENTAL

The crystal used for the structure determination was a small red plate, elongated parallel to the c axis with dimensions of approximately 0.8 mm. x 0.2 mm. x 0.04 mm. The crystal was considered to be small enough so that absorbtion could be neglected. Weissenberg data using CuKα x-rays with the crystal rotating around the c axis were taken for layers $\ell = 0$ through $\ell = 10$. Multiple films were used and the intensities of 663 reflections were measured by visual comparison with a calibrated film strip. In addition there were about 1170 unobserved reflections in the region photographed. Preliminary scale factors were obtained from the exposure times of the various layers, but these were later allowed to vary in the least squares refinement.

An hk0 Weissenberg film, calibrated with a thin quartz fiber (a = 4.913Å, b = 5.405Å) was taken for the measurement of a* and b*. The ratio of a*/c* was measured on a MoKα precession photograph with the crystal precessing around the b axis. The angle β was obtained from the precession film by direct measurement and also by solution of the triangle containing c*, a*, β*, and d^*_{102}. The value of β used is the average of these two measurements.

UNIT CELL AND SPACE GROUP

The cell constants of the monoclinic unit cell[5] at room temperature are:

$$a = 7.50 \pm 0.02 \text{ Å}$$

$$b = 11.97 \pm 0.02 \text{ Å}$$

$$c = 13.82 \pm 0.05 \text{ Å}$$

$$\beta = 123.1^{\circ} \pm 0.2^{\circ}$$

The probable space group was determined to be $P2_1/c$ from the systematic absences on the Weissenberg photographs. Solution of the structure confirms this choice. The density calculated on the assumption of 4 molecules per unit cell is 1.24 g/cm^2, which is reasonable for a compound of this type. The density was not measured.

DETERMINATION OF THE STRUCTURE

After the usual corrections for Lorentz and polarization factors a three-dimensional Patterson function was calculated. From this it was possible to assign coordinates to the three "heavy atoms", two sulphurs and one phosphorus, although it was not possible to distinguish sulphur from phosphorus. These three atoms were then used to calculate structure factors, and the resulting signs were used to calculate a three-dimensional Fourier synthesis. The Fourier synthesis showed 8 peaks which could be due to carbon atoms, instead of the 7 expected, and suggested two possible structures. After two cycles of least squares refinement of one structure the conventional R factor dropped to 0.211 and would not refine any further. The second structure however gave an R factor of 0.126 after one cycle of least squares and is therefore considered to be correct. All least squares and structure factor calculations were made on the I.B.M. 704 computer using the program of Busing and Levy.[6] The form factors of the "International Tabellen"[7] were used for sulphur and phosphorus, those of Hoerni and Ibers[8] for carbon, and the exact values[9] for hydrogen. Each atom other than hydrogen was assigned an individual isotropic temperature factor which was adjusted in the least squares refinement. Intensities which were too weak to be observed were omitted from the least squares and structure factor calculations. Identification of the phosphorus atom was made on the basis that it is bonded to the ethyl groups since phosphorus and sulphur cannot be distinguished by the heights of the peaks in the Fourier map.

REFINEMENT OF THE STRUCTURE

Refinement was accomplished by 4 more cycles of full-matrix least squares using equal weighting factors. After the first of these cycles structure factors of the unobserved reflections were calculated and a number of them were added after reexamination of the films. Also at this time 33 reflections were removed from the calculation because they were either extremely strong and therefore likely to suffer from extinction, or difficult to read, being close to the center or edges of the film. The number of reflections used for the final 3 cycles of least squares was 630.

The parameters of the 6 methylene-hydrogen atoms which could be uniquely determined by setting the H-C-P and H-C-C bond angles equal to $109^{\circ}\ 28'$, and the C-H bond length equal to 1.09 Å, were used in the last 3 cycles of least squares refinement. Their coordinates were recalculated after each cycle but were not varied during a cycle. Isotropic temperature factors of 7.5 $Å^2$ were arbitrarily assigned to them.

After a total of 5 cycles of full matrix least squares refinement using equal weighting factors the unreliability factors are:

$$R_1 = \Sigma \, ||F_o| - |F_c|| \, / \, \Sigma |F_o| = 0.093$$

$$R_2 = (\Sigma \, (|F_o| - |F_c|)^2 / \, \Sigma (F_o)^2 \,)^{1/2} = 0.104$$

The final values of the observed and calculated structure factors are listed in Table I. The final values of the atomic parameters are given in Table II. Table III gives the parameters of the 6 methylene hydrogens calculated from the final structure.

A three-dimensional F_o-F_c Fourier series shows indications of anisotropic temperature vibrations, however due to the scarcity of data no attempt at anisotropic refinement was made.

DESCRIPTION OF THE STRUCTURE

The structure consists of descrete molecules as shown in Figure 2. Bond lengths and bond angles are shown in Figure 1 and Table IV. The C-S bond lengths of 1.68 and 1.69 Å, and the S-C-S bond angle of 128°, are substantially different from the dimensions of CS_2(1.55Å and 180°) and leave no doubt that the compound is not a loose molecular complex. The length of the C-S bond is in fact intermediate between the lengths expected for a single and double C-S bond (1.55 and 1.81 Å). The bond angles around the thioformate carbon atom (128° for the S-C-S bond angle, 119° and 113° for the S-C-P bond angles) are similiar to those occurring in salts of carboxylic acids, e.g. the oxalate ion in which the angles are 124°, 121°, and 115° respectively. These facts are consistant with Jensen's proposal that the molecule is a zwitterion with a single negative charge spread out on the two sulphur atoms and a positive charge on the phosphorus.

The phosphorus atom is roughly tetrahedral with bond angles ranging from 108° to 112°. The C-P bonds average 1.80 Å which is shorter than the 1.87 Å bond length reported for $P(CH)_3$.[10]

The bond length calculations neglect the shortening of the observed bond lengths from their true values due to the large thermal motion. If the atoms are assumed to move isotropically and in phase the corrections range from 0.001 to 0.007 Å., while if the atoms are assumed to move isotropically but with random phase the corrections range from 0.02 Å. to 0.04 Å., and are certainly not negligible.

The uncertainties in bond lengths calculated from the standard deviations of atomic coordinates given by the least squares calculation are about 0.016 Å. for the C-S bonds, 0.019 Å. for P-C bonds, and 0.025 Å for C-C bonds. However the lack of agreement in the bond lengths of the

three chemically equivalent C-P bonds suggests the errors in the bond lengths are greater. A standard deviation of about 0.03 Å. for all bonds seems more reasonable. Similiarly the standard deviations of the bond angles are estimated to be about 2°.

ACKNOWLEDGEMENTS

We thank Professor George Wiley for providing the crystals, and Mrs. Helena Ruben, and Dr. Quintin Johnson for their help.

References

1. This work was done under the auspices of the U.S. Atomic Energy Commission.
2. T. N. Margulis and D. H. Templeton, J. Am. Chem. Soc. 83, 995 (1961).
3. K. A. Jensen, J. prakt. Chem. 148, 101 (1937).
4. K. Issleib and A. Brack, Z. anorg. u. allgem. Chem. 277, 271 (1954).
5. It was noticed after the structure determination was completed that another unit cell may be chosen with the same a and b axes but with $c = 13.77$ Å and $\beta = 122^{\circ}\ 46'$. The space group for the alternative cell is also $P2_1/c$. All coordinates of the structure are reported in terms of the original cell.
6. W. R. Busing and H. Levy, "A Crystallographic Least Squares Refinement Program for the IBM 704", Oak Ridge National Laboratory Report 59-4-37 (1959).
7. "Internationale Tabellen zur Bestimmung von Kristallstrukturen", Vol. II, Borntraeger, Berlin, 1935, p. 571.
8. J. A. Hoerni and J. A. Ibers, Acta Cryst. 7, 744 (1954).
9. M. H. Pirenne, "The Diffraction of X-rays and Electrons by Free Molecules", Cambridge, 1946, p. 12.
10. L. E. Sutton, "Tables of Interatomic Distances and Configuration in Molecules and Ions" (The Chemical Society, Burlington House, London, 1958).

Table I. Observed and calculated structure factors. Reflections marked by an asterisk (*) were not used in the least squares refinement either because they could not be observed accurately or they were likely to suffer from extinction. Unobserved reflections are omitted.

h	k	ℓ	F_o	F_c
0	0	0	*	380.0
0	2	0	*	-112.1
0	4	0	73.6	-66.3
0	6	0	20.9	-20.3
0	8	0	60.7	57.8
0	10	0	22.3	-22.5
0	14	0	8.6	-6.6
1	0	0	*	116.5
1	1	0	52.2	-58.3
1	2	0	70.3	-77.4
1	3	0	27.9	-28.0
1	4	0	27.6	29.2
1	5	0	13.7	-14.0
1	6	0	18.3	-15.5
1	7	0	51.5	45.8
1	8	0	19.8	17.1
1	9	0	16.2	-14.4
1	10	0	15.9	-14.9
1	11	0	8.1	-7.2
1	12	0	13.5	11.0
2	1	0	3.9	-4.0
2	2	0	13.5	-15.8
2	3	0	20.6	20.0
2	4	0	19.7	18.5
2	5	0	46.4	-47.2
2	7	0	34.7	37.0
3	0	0	35.9	-34.1
3	1	0	6.8	-5.7
3	2	0	17.4	17.4
3	3	0	5.9	6.1
3	4	0	12.0	-10.1
3	5	0	24.0	-23.6
3	6	0	19.4	18.2
3	7	0	25.1	24.3
3	8	0	10.7	-12.7
3	14	0	7.6	4.3
4	0	0	40.0	-43.3
4	1	0	8.4	7.2
4	2	0	25.4	25.0
4	4	0	12.8	-8.1
4	6	0	13.5	14.6
4	8	0	11.4	-14.1
4	10	0	7.5	7.3
4	11	0	6.8	-5.3
4	12	0	5.7	-6.1
5	0	0	37.5	-39.1
5	1	0	17.3	18.8
5	2	0	16.7	15.5
5	4	0	8.0	8.3
5	7	0	6.0	-7.7
5	8	0	12.2	-11.1
5	9	0	8.7	5.9
5	10	0	6.3	5.5
6	0	0	8.0	-6.8
6	1	0	12.9	12.6
6	7	0	10.8	-9.6
6	9	0	5.2	4.7
7	0	0	6.8	4.8
7	6	0	5.4	-5.6
8	0	0	4.7	4.4
8	1	0	4.9	-4.2
0	2	1	17.4	-15.6
0	3	1	29.3	27.0
0	4	1	8.9	-9.2
0	5	1	26.9	-24.7
0	7	1	9.1	-11.6
0	8	1	22.3	21.6
0	9	1	18.7	17.8
0	10	1	15.3	-15.0
-1	1	1	*	15.3
-1	4	1	23.2	-18.8
-1	5	1	14.7	-17.7
-1	7	1	12.9	-10.5
-1	8	1	24.6	24.7
-1	9	1	23.1	20.7
-1	10	1	16.2	-16.2
-2	1	1	44.2	46.4
-2	2	1	87.1	86.7
-2	3	1	40.9	-40.7
-2	4	1	19.3	-18.0
-2	5	1	12.7	-13.5
-2	6	1	30.7	-33.5
-2	8	1	18.2	16.7
-2	9	1	19.4	16.0
-3	1	1	8.2	7.9
-3	2	1	35.1	41.6
-3	3	1	22.1	-21.8
-3	5	1	17.2	16.2
-3	6	1	15.6	-14.9
-4	1	1	11.2	8.2
-4	2	1	13.2	14.4
-4	3	1	19.3	-19.5
-4	5	1	10.5	11.7
-5	5	1	14.1	13.1
1	1	1	14.1	-16.1
1	2	1	46.4	-46.7
1	3	1	27.5	28.9
1	4	1	4.9	-5.3
1	5	1	16.3	-14.6
1	6	1	17.1	16.2
1	8	1	16.3	14.2
1	10	1	11.6	-11.1
2	1	1	30.0	-31.7
2	2	1	28.9	-33.1
2	3	1	43.3	39.2
2	4	1	8.0	5.3
2	6	1	9.4	12.5
2	7	1	10.2	-7.4
3	1	1	36.8	-37.2
3	2	1	17.3	-16.1
3	3	1	38.2	36.3
3	4	1	9.5	11.6
3	5	1	14.1	15.3
3	7	1	13.6	-12.1
3	8	1	11.5	-10.7
4	4	1	13.3	13.4
4	8	1	14.2	-12.0
0	0	2	*	-27.2
0	1	2	*	12.9
0	2	2	42.9	40.2
0	3	2	44.9	-43.5
0	4	2	43.1	-45.5
0	5	2	52.8	50.2
0	6	2	29.8	27.6
0	7	2	21.3	-24.4
0	8	2	11.0	-11.7
0	9	2	14.6	14.2
-1	1	2	*	-38.7
-1	2	2	56.4	51.1
-1	3	2	40.3	-36.2
-1	4	2	25.9	-22.9
-1	5	2	36.3	34.6
-1	6	2	17.9	16.3
-1	8	2	19.0	-19.8
-1	10	2	17.6	18.0
-2	1	2	82.0	-87.4
-2	2	2	32.4	31.8
-2	4	2	41.4	-39.6
-2	5	2	14.8	16.4
-2	7	2	11.4	10.8
-2	9	2	17.1	-17.6
-2	10	2	20.0	17.1
-3	0	2	33.3	33.3
-3	1	2	48.1	-46.9
-3	3	2	34.4	40.7
-3	4	2	9.0	-12.0
-3	5	2	21.6	-22.5
-3	6	2	25.6	-27.5
-3	7	2	11.2	9.8
-3	8	2	19.0	20.9
-3	9	2	15.4	-14.2
-3	11	2	12.3	12.6
-4	1	2	9.5	10.5
-4	2	2	13.7	-13.9
-4	3	2	48.2	54.1
-4	4	2	35.7	37.5
-4	5	2	35.1	-41.2
-4	6	2	30.9	-33.0
-5	2	2	19.9	-19.6
-5	3	2	11.7	10.2
-5	4	2	36.1	38.4
-5	5	2	12.3	-12.4
-5	6	2	17.8	-19.2
-6	0	2	15.4	10.2
-6	1	2	15.5	13.5
-6	2	2	12.6	-11.4
-7	1	2	12.0	11.3
1	0	2	15.5	-13.9

h	k	ℓ	F_o	F_c
1	1	2	42.4	-39.8
1	3	2	82.9	-77.5
1	5	2	72.1	71.5
1	6	2	24.6	26.6
1	7	2	10.5	-10.7
1	8	2	11.4	-11.5
1	10	2	9.1	-9.9
1	11	2	12.6	-10.1
2	0	2	7.8	3.6
2	1	2	13.7	12.9
2	2	2	24.7	-24.5
2	4	2	23.7	21.1
2	5	2	7.2	9.6
2	6	2	17.0	16.8
2	7	2	14.1	-13.3
2	8	2	12.1	-8.2
2	10	2	21.9	-16.7
3	0	2	23.9	23.3
3	1	2	10.7	12.1
3	2	2	22.3	-21.8
3	3	2	23.3	24.7
3	5	2	22.7	-23.8
3	10	2	12.1	-11.9
4	0	2	14.3	14.0
4	3	2	26.6	29.5
4	5	2	28.0	-28.2
5	3	2	12.7	11.0
5	4	2	12.6	-10.3
5	5	2	12.4	-12.9
5	7	2	11.5	9.5
0	1	3	*	-37.7
0	2	3	57.8	48.2
0	3	3	19.7	17.4
0	4	3	35.4	-32.6
0	5	3	33.9	32.7
0	7	3	7.6	-5.8
0	8	3	18.6	17.8
0	9	3	16.7	-15.0
0	10	3	9.8	-4.7
-1	1	3	*	21.6
-1	2	3	58.4	-52.6
-1	3	3	35.1	-33.4
-1	4	3	27.7	-27.7
-1	5	3	8.4	8.2
-1	6	3	37.6	36.9
-1	7	3	16.7	15.3
-1	8	3	11.6	12.0
-1	9	3	8.9	-12.4
-1	10	3	13.1	-11.7
-1	12	3	9.0	-7.5
-1	14	3	9.5	6.5
-2	1	3	33.8	37.8
-2	2	3	18.4	-19.2
-2	3	3	36.5	-40.8
-2	4	3	11.2	-10.7
-2	5	3	8.9	-10.3
-2	6	3	17.1	16.4
-2	7	3	20.4	21.4
-2	9	3	9.0	-8.2
-3	1	3	26.2	29.1
-3	2	3	19.3	-18.9
-3	3	3	23.9	-26.8
-3	5	3	14.0	-15.2
-3	7	3	14.3	16.3
-4	1	3	16.6	22.9
-4	3	3	16.1	-20.4
-4	4	3	14.2	16.8
-4	5	3	15.0	-13.8
-4	6	3	10.4	-8.1
-4	7	3	12.6	14.0
-5	1	3	8.3	7.0
-5	4	3	16.3	17.8
-6	3	3	9.4	8.2
-6	4	3	11.5	11.4
1	1	3	20.1	-23.4
1	2	3	47.8	45.0
1	3	3	16.2	19.1
1	4	3	17.1	-20.2
1	5	3	9.7	11.2
1	6	3	14.0	-13.7
1	7	3	8.1	-6.8
1	8	3	12.4	14.4
2	1	3	21.8	-23.6
2	2	3	25.7	28.6
2	3	3	26.0	26.9
2	6	3	11.8	-12.3
3	2	3	12.6	15.1
3	3	3	14.2	13.4
3	5	3	8.8	-10.5
3	6	3	8.1	-7.6
4	7	3	8.8	-0.7
0	0	4	*	-106.3
0	1	4	*	-40.1
0	2	4	29.1	24.8
0	3	4	42.5	38.9
0	4	4	34.6	31.7
0	5	4	14.0	-14.0
0	6	4	6.5	6.2
0	8	4	22.7	-21.7
0	9	4	14.0	-14.2
0	11	4	16.3	16.7
-1	0	4	*	-94.1
-1	1	4	*	-66.6
-1	2	4	*	19.8
-1	4	4	50.0	48.4
-1	6	4	18.2	-19.1
-1	7	4	23.3	25.3
-1	8	4	10.4	-6.9
-1	9	4	19.3	-18.4
-2	0	4	46.7	-47.0
-2	3	4	23.2	-22.6
-2	4	4	44.1	45.0
-2	6	4	24.7	-29.6
-2	7	4	21.6	23.9
-2	8	4	10.5	8.2
-3	0	4	30.8	32.0
-3	1	4	48.0	47.0
-3	3	4	37.9	-35.0
-3	6	4	17.7	-21.6
-3	7	4	10.2	8.4
-3	8	4	15.5	19.1
-3	9	4	14.2	13.8
-3	11	4	16.1	-15.2
-4	1	4	49.0	52.6
-4	3	4	27.4	-28.6
-4	5	4	9.8	9.1
-4	7	4	11.0	-7.2
-4	9	4	16.5	15.3
-4	11	4	15.3	-13.7
-5	0	4	13.1	12.0
-5	1	4	19.6	23.3
-5	2	4	10.0	10.0
-5	3	4	19.3	-20.8
-5	4	4	26.0	-27.4
-5	5	4	11.0	11.4
-5	6	4	8.2	9.3
-6	1	4	15.9	16.1
-6	2	4	8.2	9.3
-6	3	4	8.3	9.1
-6	4	4	18.4	-23.5
-6	5	4	11.7	-7.9
-6	6	4	14.3	14.3
-7	3	4	14.1	13.0
-7	5	4	10.9	-9.3
-7	6	4	10.4	9.5
-8	1	4	14.3	-11.0
-8	3	4	9.3	6.8
1	0	4	30.5	-26.6
1	2	4	28.0	25.3
1	3	4	33.7	32.5
1	4	4	22.1	-22.4
1	6	4	16.1	14.8
1	7	4	19.8	-16.5
1	8	4	8.1	-9.5
1	10	4	8.4	8.6
1	11	4	15.9	14.2
2	2	4	12.7	13.1
2	4	4	20.8	-19.1
2	5	4	17.8	18.6
2	6	4	10.8	9.9
2	7	4	16.0	-20.6
3	0	4	18.0	21.5
3	1	4	8.8	8.7
3	3	4	18.8	-17.8
3	4	4	11.1	-10.1
3	5	4	21.4	23.7
3	7	4	16.5	-16.2
4	0	4	24.6	26.4

h	k	ℓ	F_o	F_c
4	1	4	12.7	9.9
4	2	4	14.4	-13.8
4	3	4	11.7	-12.3
4	5	4	11.6	10.7
5	0	4	*	22.4
5	2	4	13.5	-12.1
5	8	4	7.3	7.1
0	2	5	*	22.8
0	3	5	16.8	-13.0
0	5	5	17.1	17.1
0	10	5	9.1	8.2
0	8	5	10.4	-11.3
0	9	5	12.6	-13.8
-1	1	5	6.0	-3.3
-1	2	5	*	7.8
-1	3	5	8.1	-11.0
-1	4	5	10.9	9.3
-1	5	5	19.0	18.1
-1	7	5	6.4	8.8
-1	8	5	13.2	-11.5
-1	9	5	18.7	-18.0
-1	10	5	9.0	7.5
-2	1	5	11.7	-13.9
-2	2	5	*	-28.9
-2	4	5	16.8	13.9
-2	5	5	21.4	20.9
-2	6	5	6.9	6.7
-2	8	5	10.1	-8.3
-2	9	5	18.7	-17.6
-3	1	5	7.9	-7.8
-3	2	5	*	-49.5
-3	3	5	5.4	5.7
-3	4	5	15.5	15.6
-3	6	5	15.6	15.9
-3	8	5	8.6	-7.0
-4	1	5	9.6	-11.1
-4	2	5	46.7	-47.6
-4	3	5	13.2	16.4
-4	4	5	8.5	8.5
-4	6	5	18.0	20.4
-5	2	5	7.6	-8.3
-5	5	5	14.7	-15.2
-5	9	5	12.6	13.9
-6	2	5	10.6	10.0
-6	3	5	8.8	6.7
1	1	5	24.8	26.5
1	2	5	31.2	31.5
1	3	5	34.2	-31.4
1	4	5	7.0	-6.6
1	6	5	9.8	-8.9
1	7	5	8.5	8.5
1	10	5	8.9	5.9
2	1	5	14.9	16.2
2	2	5	19.4	19.8
2	3	5	17.5	-18.4
2	4	5	14.1	-11.8

h	k	ℓ	F_o	F_c
3	1	5	8.6	9.2
3	2	5	8.7	8.0
3	4	5	9.0	-8.2
3	8	5	8.6	8.0
3	9	5	7.9	7.8
0	0	6	18.6	16.4
0	1	6	19.5	17.8
0	2	6	26.8	-26.1
0	4	6	47.0	43.9
0	5	6	12.6	-10.0
0	6	6	42.3	-41.0
0	8	6	17.5	17.7
-1	0	6	*	51.3
-1	2	6	*	-28.6
-1	3	6	8.9	8.3
-1	4	6	15.3	14.0
-1	5	6	12.9	-12.8
-1	6	6	21.3	-20.5
-1	7	6	17.2	-14.4
-1	8	6	15.1	18.9
-1	9	6	13.8	12.5
-2	0	6	*	-12.8
-2	1	6	*	61.7
-2	2	6	*	-11.5
-2	4	6	22.0	18.1
-2	5	6	7.9	-8.2
-2	6	6	8.9	9.6
-2	7	6	13.8	-12.7
-2	8	6	10.6	-8.9
-2	9	6	13.7	15.5
-3	0	6	*	-44.5
-3	1	6	*	23.7
-3	2	6	10.3	9.9
-3	3	6	9.5	-8.2
-3	4	6	5.5	2.6
-3	6	6	28.6	27.9
-3	8	6	26.4	-25.3
-4	0	6	25.7	-22.5
-4	1	6	17.8	-17.4
-4	2	6	12.0	12.6
-4	3	6	12.8	-12.1
-4	4	6	17.4	-17.6
-4	6	6	30.1	31.7
-4	7	6	16.9	19.3
-4	8	6	17.7	-19.7
-5	0	6	20.0	21.5
-5	1	6	21.3	-24.2
-5	4	6	25.6	-28.9
-5	6	6	17.3	18.0
-5	7	6	13.9	14.2
-6	0	6	22.5	20.7
-6	1	6	15.0	-18.9
-7	0	6	14.0	14.6
1	0	6	10.2	13.6
1	2	6	12.2	-11.9
1	3	6	23.8	23.8

h	k	ℓ	F_o	F_c
1	4	6	26.0	22.2
1	5	6	20.1	-18.9
1	6	6	31.7	-33.7
1	8	6	16.0	16.8
2	0	6	9.0	10.9
2	1	6	29.3	-31.1
2	6	6	11.3	-11.3
2	7	6	8.2	11.1
2	8	6	10.0	10.3
0	1	7	27.2	27.1
0	2	7	19.7	-19.0
0	3	7	26.2	-23.5
0	4	7	15.3	16.7
0	5	7	15.6	-16.9
0	7	7	10.2	12.0
-1	4	7	26.7	25.8
-1	5	7	6.7	-6.0
-1	6	7	16.4	-15.7
-1	8	7	10.3	-9.4
-1	9	7	8.6	7.7
-1	10	7	8.8	4.6
-1	14	7	3.2	-5.6
-2	1	7	*	-13.6
-2	2	7	6.1	-7.5
-2	3	7	19.0	17.5
-2	4	7	20.9	19.7
-2	8	7	10.1	-9.8
-2	9	7	8.6	10.3
-2	10	7	7.4	3.2
-3	1	7	22.6	-25.3
-3	2	7	23.4	22.7
-3	3	7	28.1	26.8
-3	4	7	5.8	5.1
-3	5	7	11.4	11.0
-3	6	7	10.2	-13.1
-3	8	7	5.9	-5.0
-3	9	7	8.6	7.0
-4	1	7	22.2	-23.5
-4	3	7	21.2	23.1
-4	4	7	6.6	-7.5
-4	5	7	12.5	11.2
-4	7	7	11.6	-12.2
-5	1	7	10.8	-10.1
-5	3	7	10.3	11.3
-5	4	7	9.3	-11.2
-5	6	7	5.9	5.9
-6	4	7	10.4	-10.5
1	1	7	12.2	12.0
1	2	7	20.5	-20.7
1	3	7	13.0	-11.6
1	4	7	7.8	6.4
1	7	7	8.6	8.7
2	2	7	10.2	-10.6
0	1	8	12.2	10.3
0	2	8	19.3	18.9
0	3	8	29.7	-29.4

h	k	ℓ	F_o	F_c
0	4	8	28.2	-28.8
0	5	8	12.2	13.4
0	6	8	11.1	12.6
0	11	8	13.4	-11.3
-1	0	8	15.5	11.8
-1	1	8	20.7	17.3
-1	2	8	22.5	22.3
-1	4	8	53.1	-48.8
-1	5	8	12.4	-9.3
-1	6	8	18.9	21.2
-2	0	8	*	12.2
-2	1	8	5.0	5.9
-2	2	8	8.0	8.9
-2	3	8	33.1	33.0
-2	4	8	31.2	-30.7
-2	5	8	30.3	-27.7
-2	6	8	17.2	18.6
-3	0	8	12.0	19.9
-3	1	8	*	-26.8
-3	2	8	14.7	-14.9
-3	3	8	33.7	33.2
-3	5	8	16.5	-16.3
-3	9	8	11.6	-12.2
-3	11	8	10.6	10.8
-4	0	8	34.9	37.4
-4	1	8	30.2	-33.2
-4	2	8	28.0	-27.3
-4	3	8	23.1	20.0
-4	4	8	12.7	10.2
-4	8	8	9.4	10.6
-4	9	8	11.5	-10.5
-4	10	8	12.8	-12.1
-4	11	8	10.8	9.5
-4	12	8	7.1	5.1
-5	1	8	11.6	-9.5
-5	2	8	20.0	-22.0
-5	3	8	9.7	9.5
-5	4	8	27.7	32.1
-5	6	8	11.2	-11.2
-5	7	8	6.6	-8.3
-5	10	8	12.1	-9.0
-6	0	8	8.7	-9.2
-6	1	8	8.9	-8.0
-6	3	8	14.3	-14.5
-6	4	8	17.2	21.3
-6	5	8	14.8	15.7
-7	3	8	14.9	-13.6
-7	5	8	11.3	12.0
-8	0	8	8.9	-6.4
-8	2	8	8.8	8.3
-8	4	8	5.9	-6.8
1	0	8	15.7	-15.1
1	1	8	21.6	21.6
1	2	8	8.6	6.0
1	3	8	18.7	-19.6
1	9	8	8.6	8.6
1	11	8	11.2	-9.0
2	3	8	9.4	-7.8
2	4	8	9.4	8.6
2	11	8	13.2	-4.0
0	2	9	13.0	-11.3
0	3	9	5.5	6.0
0	6	9	6.1	5.9
0	9	9	5.8	6.3
-1	1	9	10.8	-10.3
-1	2	9	7.5	-5.4
-1	3	9	18.8	17.5
-1	4	9	6.3	-5.8
-1	5	9	3.9	-4.3
-1	6	9	7.2	7.0
-1	7	9	7.5	-8.5
-1	9	9	6.1	5.8
-2	1	9	6.9	8.7
-2	2	9	4.8	-2.8
-2	3	9	2.8	3.4
-2	4	9	9.8	-7.8
-2	5	9	19.8	-19.8
-2	6	9	7.9	8.6
-2	9	9	10.6	8.6
-3	1	9	5.2	6.0
-3	2	9	23.0	24.3
-3	3	9	3.9	3.1
-3	4	9	9.0	-7.2
-3	5	9	18.2	-16.8
-3	6	9	9.6	-7.8
-3	7	9	5.9	5.2
-4	1	9	3.6	-2.2
-4	2	9	*	31.4
-4	3	9	7.6	5.4
-4	4	9	6.9	-6.0
-4	5	9	5.6	-5.0
-4	6	9	14.0	-15.2
-4	8	9	6.2	6.3
-5	1	9	4.8	-5.3
-5	2	9	17.8	18.5
-5	5	9	5.8	7.2
-5	6	9	10.4	-10.9
-5	8	9	6.1	7.0
-5	9	9	8.4	-7.8
-6	3	9	7.2	-7.9
-6	5	9	6.1	7.0
-6	8	9	5.8	4.9
-6	9	9	5.4	-5.3
-7	2	9	6.2	-5.2
-7	3	9	*	-4.3
-7	5	9	7.4	7.2
-8	2	9	8.2	-7.4
1	1	9	5.9	-6.6
1	2	9	17.0	-19.7
1	3	9	4.3	5.3
1	4	9	7.5	5.5
1	6	9	7.5	8.7
0	1	10	15.3	-14.2
0	3	10	8.0	8.4
0	5	10	5.9	-9.1
0	6	10	11.8	10.4
0	7	10	10.0	10.3
0	9	10	7.1	-6.0
-1	2	10	13.3	-11.4
-1	5	10	8.1	-2.2
-1	6	10	5.8	4.6
-1	7	10	10.2	9.7
-1	9	10	7.8	-6.2
-1	10	10	7.1	-5.6
-2	0	10	18.1	21.1
-2	1	10	19.3	-17.3
-2	2	10	13.6	-12.8
-2	3	10	12.1	-9.7
-2	5	10	13.8	12.9
-2	8	10	8.3	6.3
-4	0	10	*	11.1
-4	1	10	19.3	23.5
-4	2	10	9.2	7.3
-4	2	10	12.8	7.3
-4	4	10	16.5	-14.5
-4	5	10	16.5	18.8
-4	6	10	7.9	-6.5
-4	7	10	19.4	-22.0
-4	8	10	8.3	8.7
-4	9	10	11.5	9.8
-5	0	10	*	-27.3
-5	1	10	20.2	22.1
-5	2	10	17.6	16.0
-5	5	10	7.9	8.4
-5	7	10	16.7	-17.2
-5	8	10	8.2	-6.3
-5	9	10	7.8	7.6
-6	0	10	*	-29.1
-6	2	10	16.5	15.8
-6	8	10	7.8	-7.6
-7	0	10	14.4	-15.6
-7	2	10	5.9	7.8
-7	3	10	8.3	8.4
-8	3	10	10.9	8.9
-8	5	10	11.1	-11.4
1	0	10	8.3	-9.5
1	5	10	8.2	-6.7
1	6	10	9.6	9.7
1	8	10	6.7	-7.6
2	1	10	11.2	8.4

Table II. Final parameters.

ATOM	x	y	z	σ(x)	σ(y)	σ(z)	B,Å^2
S_1	0.1258	0.1145	0.1414	0.0008	0.0004	0.0004	6.4
P_2	.1313	.2441	.3289	.0007	.0004	.0004	4.3
S_3	.0886	.8398	.4003	.0007	.0004	.0004	5.8
C_4	.0542	.2308	.1819	.0025	.0013	.0014	5.3
C_5	.1024	.7507	.1690	.0025	.0014	.0014	5.5
C_6	.2964	.1282	.4170	.0025	.0013	.0014	5.5
C_7	.2772	.3725	.3906	.0025	.0013	.0014	5.5
C_8	.3467	.3723	.0410	.0029	.0015	.0016	6.9
C_9	.4794	.3793	.3848	.0029	.0016	.0017	7.3
C_{10}	.2460	.6453	.2208	.0030	.0016	.0017	7.9

Table III. Hydrogen atom positions calculated from the final structure.

Atom	x	y	z
H_{11}	0.1937	0.8247	0.2158
H_{12}	.0592	.7630	.0806
H_{13}	.1737	.4435	.3450
H_{14}	.3244	.3789	.4803
H_{15}	.4446	.1283	.4199
H_{16}	.2204	.0497	.3746

Table IV. Bond angles.

Atoms	Angles °
S_1-C_4-S_3	128.0°
P_2-C_4-S_1	119.0°
P_2-C_4-S_3	113.0°
C_4-P_2-C_5	108.3°
C_4-P_2-C_6	111.9°
C_4-P_2-C_7	110.4°
C_5-P_2-C_6	110.0°
C_5-P_2-C_7	107.7°
C_6-P_2-C_7	108.5°
P_2-C_5-C_{10}	113.5°
P_2-C_6-C_8	114.4°
P_2-C_7-C	112.0°

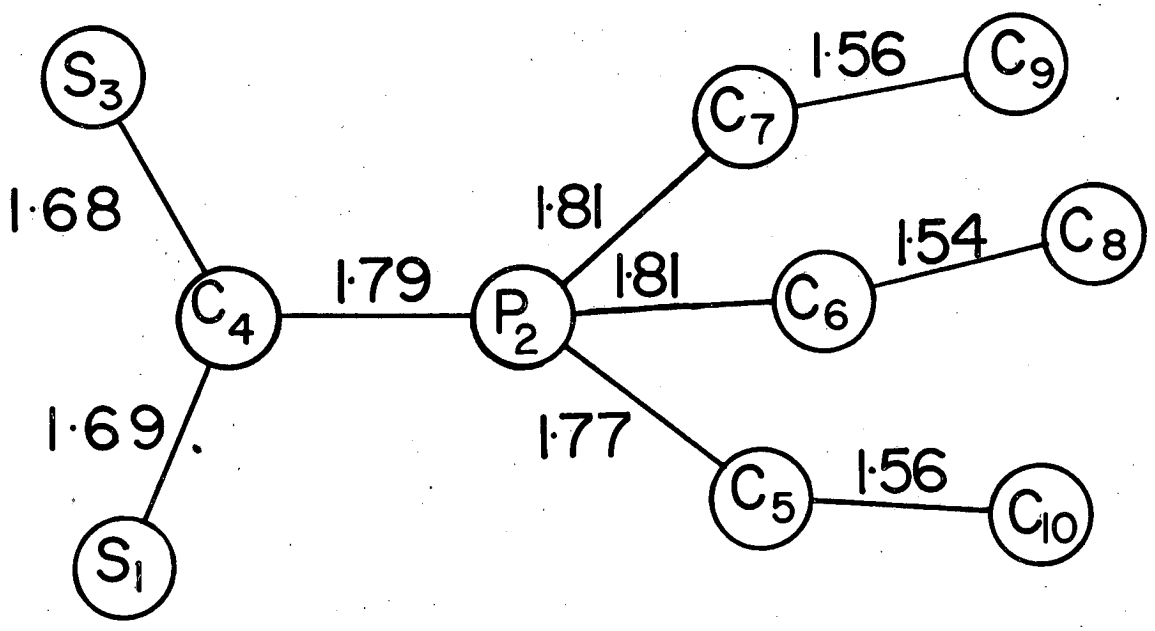

MU-24426

Fig. 1. Bond distances in Å (not to scale).

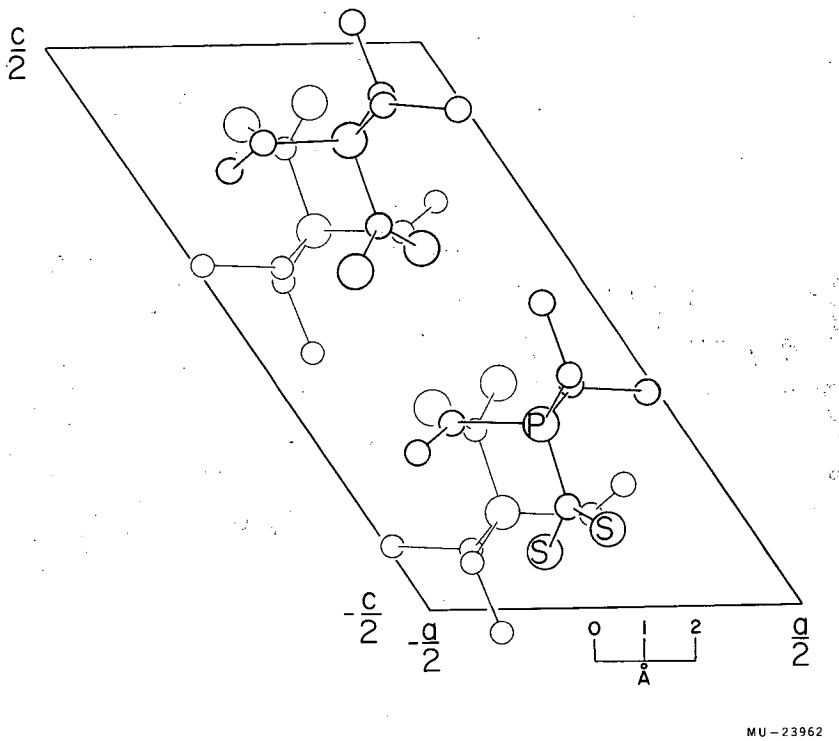

Fig. 2. Projection of four molecules down [010].

This report was prepared as an account of Government sponsored work. Neither the United States, nor the Commission, nor any person acting on behalf of the Commission:

A. Makes any warranty or representation, expressed or implied, with respect to the accuracy, completeness, or usefulness of the information contained in this report, or that the use of any information, apparatus, method, or process disclosed in this report may not infringe privately owned rights; or

B. Assumes any liabilities with respect to the use of, or for damages resulting from the use of any information, apparatus, method, or process disclosed in this report.

As used in the above, "person acting on behalf of the Commission" includes any employee or contractor of the Commission, or employee of such contractor, to the extent that such employee or contractor of the Commission, or employee of such contractor prepares, disseminates, or provides access to, any information pursuant to his employment or contract with the Commission, or his employment with such contractor.