1.1 FEL Design Studies at LBNL: Activities and Plans*

J. Corlett, W. Fawley, S. Lidia, H. Padmore, G. Penn, I. Pogorelov, J. Qiang, F. Sannibale, J. Staples, C. Steier, M. Venturini, W. Wan, R. Wilcox, A. Zholents
Mail to: jncorlett@lbl.gov, Lawrence Berkeley National Laboratory, 1 Cyclotron Road, Berkeley, CA 94720, USA

1.1.1 Introduction

LBNL staff are currently pursuing R&D for future x-ray FELs, and participate in two FEL construction projects. Our strategy is to address the most fundamental challenges, which are the cost-drivers and performance limitations of FEL facilities. An internally funded R&D program is aimed at investigating accelerator physics and technologies in three key areas:

- Theoretical study, modelling, and experimental development of low emittance, high quantum efficiency cathodes
- Design studies of electron beam delivery systems, including emittance manipulations, high-resolution modelling of 6-D phase space, and low-emittance beam transport
- Design studies of optical manipulations of electron beams for seeded and SASE FELs, providing short x-ray pulses of variable duration, synchronous with the seed and pump laser sources, and also long transform-limited pulses with a narrow bandwidth. Design studies of means for production of attosecond x-ray pulses at various wavelengths.

We are collaborators in the FERMI@Elettra seeded FEL facility under construction at Sincrotrone Trieste, Italy, participating in accelerator design and FEL physics studies, and mechanical and electrical engineering [1, 2].

We are participating in the LCLS project at SLAC [3, 4], implementing our design of stabilized timing and synchronization systems.

Here we outline our long-term objectives, and current activities.

1.1.2 A High Repetition Rate FEL Facility

The LBNL program in R&D toward advanced FELs addresses the scientific needs of the future, such as understanding the dynamics and "emergent" properties of complex systems arising from correlated interactions between charge carriers and constituent atoms. Direct quantitative measurements of the electronic and atomic structural dynamics on the ultrafast time scale of the underlying correlations will be indispensable in achieving new insight into the complex properties emerging from correlated phenomena in atoms, molecules, and solids (see for example references [5-8] for scientific conferences and workshops motivating these requirements). The fundamental time scales span:

- ~ picoseconds, characteristic of conformational relaxations in molecular systems and electron-lattice energy transfer times in crystalline solids.
- ~100 femtoseconds, characteristic of atomic vibrational periods in molecules and solids.
- ~10 femtoseconds, characteristic of electron-electron scattering times in solids.

*This work was supported by the U.S. Department of Energy under Contract No. DE-AC02-05CH11231.

- ~100 attoseconds, characteristic of electron-electron correlations and valence electron motion.

Answering questions in these areas will require new tools, complementing the existing and planned synchrotron radiation facilities. To address these needs, we suggest a new user facility equipped with an array of task-designated FELs, wherein each FEL may be configured to operate in a different mode, independently of the other FELs. Each FEL will have independent control of wavelength and polarization, and optical manipulations of the electron beam will be used to produce seeded x-ray pulses with control of pulse duration, offering flexibility and versatility to many experiments simultaneously [9-14]. High repetition rate and high average photon flux are essential to many experimental techniques. To meet these needs, we envision a facility comprised of a high bunch repetition rate (~MHz), low-emittance and low energy spread RF photocathode electron gun, and a low-energy (~2 GeV) superconducting linac, feeding an array of approximately ten FELs through an elaborate beam switchyard. Each FEL operates independently at a repetition rate of ~100 kHz. Photon energies would span approximately 10 eV to 1 keV, with the possibility to reach higher photon energy at the expense of reduced photon flux. A variety of seeded and SASE FELs provide the above described output radiation with a peak power from a few hundred megawatts to a few gigawatts. The temporal coherence available in the seeded FEL allows close to transform-limited x-ray pulses, resulting in a narrow bandwidth signal that could possibly be utilized in experiments without a monochromator. Techniques have also been developed to use optical manipulations of the electron bunch to produce x-ray pulses of a few hundred attosecond duration [12-14].

Figure 1 shows a schematic of a multi-user FEL facility concept. The major components are: (1) a low-emittance, low energy spread RF photocathode electron gun operating in CW mode at ~60 MHz, providing electron bunches at up to MHz repetition rate, (2) hardware for manipulating the electron-beam emittance in preparation for the FEL process, (3) a CW superconducting RF linac, (4) a beam-switching system, (5) multiple independent FELs and beamlines, and (6) lasers for the photocathode gun, FEL seeding, pump-probe experiments, and timing and synchronization. A low-energy linac is used to minimize costs. The electron beam is dumped at the end of each FEL as we do not currently believe the added cost and complexity of electron beam recirculation and energy recovery is worthwhile for a machine of modest electron beam power.

1.1.3 Current R&D Activities

Efficient radiation at wavelengths down to 1-nm, with an electron beam energy of approximately 2 GeV, requires a bright electron beam with low-emittance, low energy spread, and high peak current. This, together with the requirement of high-repetition rate, drives the need for a vigorous R&D program.

1.1.3.1 *VHF photo-gun*

We are developing a design for a high-brightness, high-repetition rate electron gun that uses a normal conducting RF structure in the VHF range, between 50 to 100 MHz. The gun cavity has quarter-wave coaxial geometry, which is a mature RF technology similar, for example, to that employed in the NSLS VUV ring accelerating cavities. The lower frequency results in a larger cavity compared to the more common designs operating at ~1 to ~3 GHz. A significant benefit of using a larger cavity is a dramatic

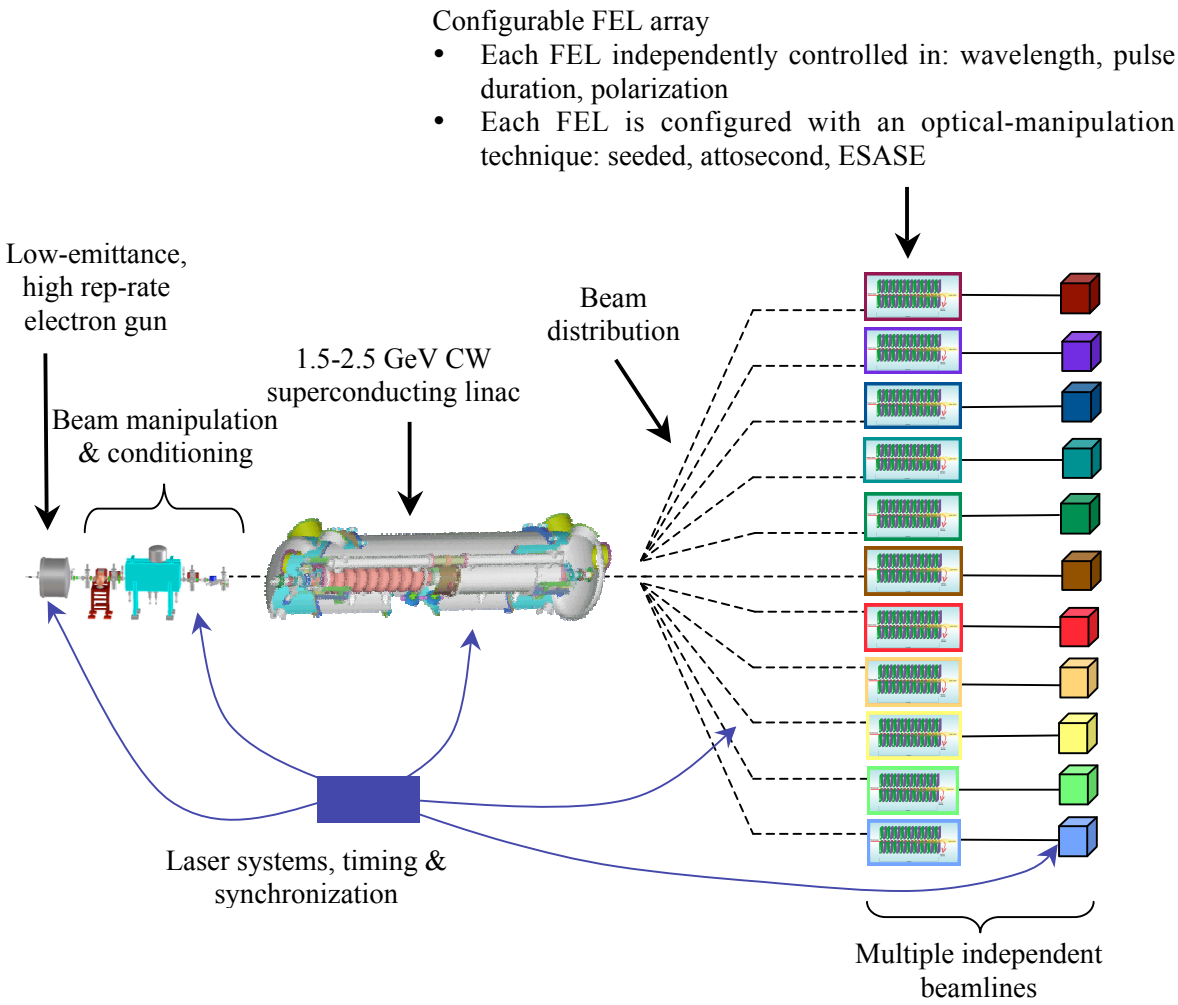

Figure 1. Schematic of a light source facility based on a high-pulse-repetition-rate, seeded FEL.

reduction of the power density on the cavity walls, which allows CW operation of the gun, and thus a bunch repetition rate of up to the RF frequency (dependent on photocathode-laser time structure). Calculations show that a VHF gun can achieve accelerating gradient at the cathode of approximately 20 MVm^{-1}. Table 1 shows example parameters for a VHF photocathode cavity.

1.1.3.2 *Photocathode design*

The aim of this program is to improve the beam quality through development of a cathode that produces a beam with very low thermal emittance. We also aim to increase the quantum efficiency up to the point at which conventional laser technology can be used to produced tailored electron pulses at MHz repetition rate. As a first step, we have investigated metallic photocathodes, and determined that photo-current at the very low photon energies typically used is dominated by surface states. This directly has led to a prediction of the minimum transverse momentum, and to a direction for producing lower emittance though use of other crystalline surfaces. These studies will be extended to metallic systems in which the surface electric field is manipulated using plasmonic interactions, and to semiconductor systems. The latter have the advantage that some

Table 1: Example parameters for a VHF coaxial cavity

Parameter	Unit	Value
Frequency	MHz	65
Gap Voltage	MV	0.5-1.0
Unloaded Q		3.5×10^4
Effective Gap Length	cm	4
Range of field in planar gap	MV/m	15-25
Cavity length	m	1
Cavity diameter	m	1.4
Inner conductor diameter	m	0.3
RF power for 0.75 MV on gap	kW	65
Peak wall power density	W/cm^2	7

degree of thermalization can take place, resulting in colder emission. This work is based on understanding the near Fermi surface electronic structure, through use of very low energy photoelectron spectroscopy, and through electronic structure modeling.

1.1.3.3 *Electron beam delivery systems*

Production of electron beams for x-ray FELs is a difficult and elaborate process consisting of the electron generation, acceleration, compression, and transport. A significant understanding of the underlying physics such as space charge effects, wake-fields, and coherent synchrotron radiation (CSR) has been gained over the past decade [15-19]. Radical improvements in the electron beam quality may be needed to be able to build a cost effective VUV-soft x-ray FEL facility. We are developing understanding of the beam phase space evolution, and means to control and manipulate emittances, using both theoretical approaches and high-resolution numerical modeling. We have developed a parallel code suite, IMPACT [20-21], for advanced supercomputer modeling of high intensity, high brightness beams in rf linacs and photoinjectors. An example is provided by 100 million macroparticle simulations of the microbunching instability, simulations that cannot be sensibly performed on today's single-processor computers. Figure 2 shows a multiprocessor simulation using IMPACT for the FERMI@Elettra linac. The figure shows the sensitivity to macroparticle number of the evolution of the microbunching instability. We are augmenting our present particle loading approach with "quiet-start" techniques, and in parallel we are also developing a direct Vlasov-Maxwell solution.

Following the accelerator, electron beams will be switched into each FEL in the array, in a time-sliced manner dependent on user needs. Techniques for switching the electron beam between FEL's are being studied, using pulsed ferrite magnets in a linear array, selectively switching the beam into FEL beamlines.

1.1.3.4 *FEL design*

Our goal is to develop design concepts for flexible photon beam performance, based on a number of FEL configurations, fed by a low-energy electron accelerator, that would provide experimentalists a variety of configurations, including high flux time-domain pulses of fs to 0.1 fs duration, and high resolution frequency-domain outputs with close to transform limited meV bandwidth.

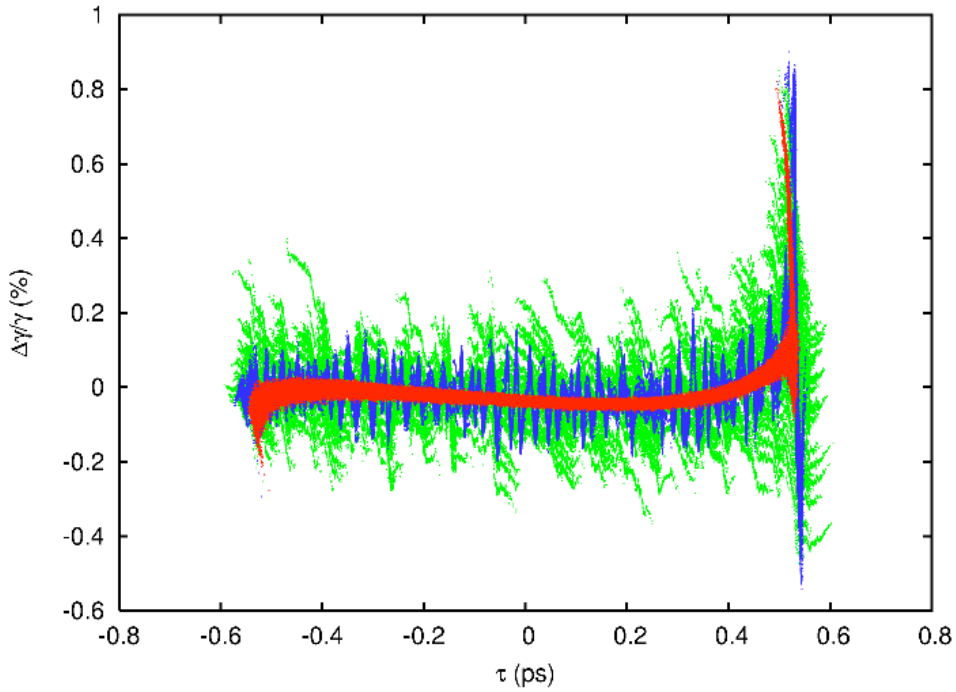

Figure 2. Longitudinal phase space distribution calculated at the end of the FERMI@Elettra linac using 2 million (green) and 100 million (blue) macroparticle IMPACT simulations. Red shows the model with no space-charge or CSR effects.

SASE, seeded, regenerative amplifier, and oscillator techniques are being simulated and developed, using GINGER and GENESIS simulation codes. Start-to end modeling of the electron beam is critical in determining realistic FEL performance capabilities. These studies are performed in conjunction with development of beam delivery systems.

1.1.3.5 *Timing and synchronization systems*

To produce an ultra-stable timing and synchronization system with jitter reduced to the few femtosecond level, we have developed a laser-based scheme with optical signals distributed over a stabilized optical fiber [22]. Transmitting precise frequency and timing signals over distances of hundreds of meters, stabilized to a few femtoseconds (a few parts in 10^8), is accomplished by measuring the phase delay in an optical fiber and actively compensating for differences with a piezoelectric modulator.

In our scheme, illustrated in Figure 3, phase differences at optical frequency are down-converted to 110 MHz. Because phase information is preserved during the heterodyning process, phase differences at optical frequency can be detected at radio frequencies, using conventional RF electronics. The radiofrequency reference signal need not be provided with femtosecond accuracy at the far end of the fiber, because one degree of error at 110 MHz is equivalent to only one degree at the optical frequency, or 0.014 fs. The system is linear, and signals modulated onto the CW laser carrier at the fiber entrance do not intermodulate with each other. Moreover, the optical power level is significantly below any nonlinear threshold in the fiber. The laser frequency itself must be stabilized, so the laser is locked to an absorption line in an acetylene cell.

At present, a 4 km fiber link has been stabilized to the femtosecond level. 2 km of fiber in this link passes under several roads and through several buildings at LBNL, demonstrating that the fiber stabilization system is robust under real-world conditions. This technique will soon be used as a backbone to demonstrate synchronization of mode-locked lasers. Further developments will include integration with controls and low-level RF systems, and high-resolution diagnostics of photon and electron beams, to provide enhanced feedback control of the integrated laser/accelerator systems. We are planning to develop and implement similar systems at the LCLS, and FERMI@Elettra.

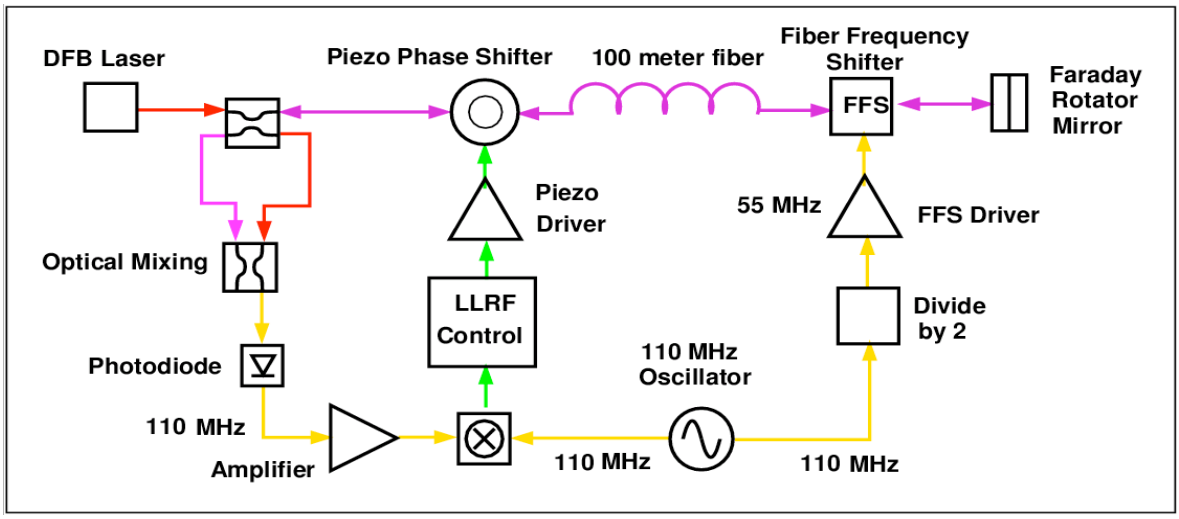

Figure 3. Schematic of the frequency-offset method for distribution of timing and synchronization signals with femtosecond-scale timing stability over long distances (100 m fiber in this example, extendable to km scale).

1.1.4 LBNL Support for the FERMI@Elettra Project

LBNL accelerator physicists and engineers participate in design and optimization studies for a seeded FEL facility, to be built at Sincrotrone Trieste, as described elsewhere in this newsletter. A novel feature will be the ability to provide both ultrafast (100 fs and shorter) photon pulses for time-domain exploration, and also longer pulses of 500-1000 fs duration with very high temporal coherence. The latter will result in photon beam bandwidths of a few meV, providing extremely high resolving power directly from the FEL.

The LBNL team participates in the design of the various systems from the high-brightness photocathode RF gun, through the main linac accelerating sections, bunch compressors, beam switch yard between two FELs, optical seeding and modulation of the electron beam, and photon production in the FELs. We also contribute to design of ultra-stable timing and synchronization systems, diagnostics and instrumentation, RF power systems, low-level RF systems, and start-to-end modeling.

1.1.5 References

1. The FERMI@Elettra FEL Project, http://www.Elettra.trieste.it/FERMI/
2. C. Bocchetta et al., "FERMI@Elettra: A seeded FEL Facility for EUV and soft x-rays," *Proceedings* of the 28th Int'l FEL Conf. (Berlin, Germany, Aug. 27-Sept. 1, 2006), http://www.bessy.de/fel2006/proceedings/PAPERS/MOPPH054.PDF.
3. The Linac Coherent Light Source, http://www-ssrl.slac.stanford.edu/lcls/
4. LCLS Conceptual Design Report, SLAC-R-593 (2002)
5. *Workshop on Ultrafast Time-resolved Soft X-ray Science* (Zeuthen, Germany, April 2005). For a workshop report, see: *Synchrotron Radiation News*, **18**, p.2-6, 2005, and the related document *Visions of Science* (and references therein) available at http://www.bessy.de/publicRelations/publications/files/sc.pdf
6. *Ultrafast X-rays 2004* (San Diego, CA, USA, April 2004); http://ultrafast2004.lbl.gov/
7. *Ultrafast Science with X-rays and Electrons* (Montreux, Switzerland, April 2003); http://sls.web.psi.ch/view.php/science/events/uscience03/index.html
8. *New Opportunities in Ultrafast Science using X-rays* (Napa, CA, USA, April 2002); http://www-esg.lbl.gov/Conferences%20&%20Meetings/ultrafast/
9. A.A. Zholents, "Method of an enhanced self-amplified spontaneous emission for x-ray free electron lasers," Phys. Rev. Special Topics: Accelerators and Beams **8**, 040701 (12 April 2005); http://dx.doi.org/doi:10.1103/PhysRevSTAB.8.040701
10. Saldin, E.L, Schneidmiller, E.A., and Yurkov, M.V., Optics Comm. **237**, 1-3 (2004), pp. 153-164; http://dx.doi.org/doi:10.1016/j.optcom.2004.03.070
11. Saldin, E.L, Schneidmiller, E.A., and Yurkov, M.V., "A new technique to generate 100 GW-level attosecond X-ray pulses from the X-ray SASE FELs," Optics Comm. **239** (2004), pp. 161-72; http://dx.doi.org/doi:10.1016/j.optcom.2004.05.0244
12. A.A. Zholents and G. Penn, "Obtaining attosecond x-ray pulses using a self-amplified spontaneous emission free electron laser," Phys. Rev. Special Topics: Accelerators and Beams **8**, 5 (May 2005), 050704; http://dx.doi.org/doi:10.1103/PhysRevSTAB.8.050704
13. A.A. Zholents and W.M. Fawley, "Proposal for intense attosecond radiation from an x-ray free-electron laser," Phys. Rev. Letters **92**, 22 (June 2004), 224801;
14. E.L. Saldin, E.A. Schneidmiller, and M.V. Yurkov, "Self-amplified spontaneous emission FEL with energy-chirped electron beam and its application for generation of attosecond x-ray pulses", PRSTAB 9, 050702 (2006)
15. M. Borland, Y.C. Chae, P. Emma, J.W. Lewellen, V.Bharadwaj, W.M. Fawley, P. Krejcik, S.V. Milton, H. Nuhn, R. Soliday and M. Woodley, "Start-to-end simulation of self-amplified spontaneous emission free electron lasers from the gun through the undulator", NIM A, Vol. 483, pp. 268-272 (2002).
16. E.L. Saldin, E.A. Schneidmiller and M.V. Yurkov, "Klystron instability of a relativistic electron beam in a bunch compressor", NIM A, Vol. 490, pp. 1-8 (2002).
17. S. Heifets, G. Stupakov and S. Krinsky, "Coherent synchrotron radiation instability in a bunch compressor", Phys. Rev. ST Accel. Beams, Vol. 5, 064401 (2002).
18. Z. Huang and K.-J. Kim, "Formulas for coherent synchrotron radiation microbunching in a bunch compressor chicane", Phys. Rev. ST Accel. Beams, Vol. 5, 074401 (2002).
19. K. Bane, "Wakefields of Sub-Picosecond Electron Bunches", SLAC-PUB-11829, 2006.
20. J. Qiang and R. Ryne, "Parallel 3D Poisson solver for a charged beam in a conducting pipe," Computer Physics Communications **138**, 18 (2001).
21. J. Qiang, R.D. Ryne, S. Habib, and V.K. Decyk, "An object-oriented parallel particle-in-cell code for beam dynamics simulation in linear accelerators," J. Computational Phys. **163**, 434 (2000).
22. J.M. Byrd, L. Doolittle, A. Ratti, J.W. Staples, and R. Wilcox, "Timing distribution in accelerators via stabilized optical fiber links," *Proceedings* of the 2006 Linac Conference (Knoxville, TN, USA, August 2006).