Design of HD2: a 15 Tesla Nb_3Sn Dipole with a 35 mm Bore

G. Sabbi, S.E. Bartlett, S. Caspi, D.R. Dietderich, P. Ferracin, S.A. Gourlay, A.R. Hafalia, C.R. Hannaford, A.F. Lietzke, S. Mattafirri, A.D. McInturff, R. Scanlan

***Abstract*— The Nb_3Sn dipole HD1, recently fabricated and tested at LBNL, pushes the limits of accelerator magnet technology into the 16 T field range, and opens the way to a new generation of HEP colliders. HD1 is based on a flat racetrack coil configuration and has a 10 mm bore. These features are consistent with the HD1 goals: exploring the Nb_3Sn conductor performance limits at the maximum fields and under high stress. However, in order to further develop the block-coil geometry for future high-field accelerators, the bore size has to be increased to 30-50 mm. With respect to HD1, the main R&D challenges are: (a) design of the coil ends, to allow a magnetically efficient cross-section without obstructing the beam path; (b) design of the bore, to support the coil against the pre-load force; (c) correction of the geometric field errors. HD2 represents a first step in addressing these issues, with a central dipole field above 15 T, a 35 mm bore, and nominal field harmonics within a fraction of one unit. This paper describes the HD2 magnet design concept and its main features, as well as further steps required to develop a cost-effective block-coil design for future high-field, accelerator-quality dipoles.**

***Index Terms*—High-field accelerator magnets, Nb_3Sn.**

I. Introduction

High-field superconducting magnets are a key technology to enable future progress in experimental particle physics. The Large Hadron Collider (LHC), which is presently under construction at CERN, will soon replace Fermilab's Tevatron as the world's most powerful accelerator. The LHC will collide proton beams with 14 TeV center-of-mass energy and 10^{34} $cm^{-2}s^{-1}$ luminosity [1]. The maximum dipole field is 8.3 T, obtained using Niobium-Titanium (NbTi) conductor at a 1.9 K operating temperature. After several years of LHC operation, performance upgrades will be required to maintain its potential for new discoveries. A possible scenario involves a luminosity upgrade within a decade, followed by an energy upgrade requiring dipoles operating at about 15 Tesla [2].

Among the conductors suitable for high-field applications, Niobium-Tin (Nb_3Sn) is the most advanced [3]. However, contrary to NbTi, Nb_3Sn is brittle and strain sensitive. In order to use this material effectively, new design concepts and fabrication methods are needed, to complement or replace the ones established for NbTi magnets. In the last 10 years, the LBNL superconducting magnet group has been developing this technology towards progressively higher fields, using different coil configurations: cosθ (D20, 13 T, 1996) [4]; dual-bore common coil (RD3b, 14.5 T, 2001) [5]; single-bore block-coil (HD1, 16 T, 2003) [6]. Since each configuration has specific advantages and drawbacks, the available design options should be evaluated in the context of a specific application, as part of an optimization process involving both the magnet and the accelerator. The HD1 test has shown that Nb_3Sn block-coils have the potential to achieve very high fields. The HD2 objective is to investigate the efficiency of this approach with respect to the ratio of the clear bore to the coil aperture, at the 15 T field level. A successful result will further advance the high-field magnet R&D effort to meet the requirements of future HEP colliders.

II. HD Series Concept and Objectives

The LBNL "HD" magnet series was conceived as a vehicle for developing Nb_3Sn technology at the maximum attainable fields and under high mechanical stresses [7]. A single-bore, block-type coil geometry was selected, marking a return to magnet designs explored at the start of the LBNL Nb_3Sn program [8]. Among the features under study for this configuration are: separation between high-field and high-stress areas in the coil; properties of flat cables in terms of critical current degradation and mechanical stability; potential for high conductor packing with small apertures; potential for efficient conductor grading; compatibility with force bypasses preventing stress build-up [9]. After the successful test of HD1, the next logical step is to attempt exploiting these features in accelerator-relevant dipole designs. The first technical challenge to be confronted is a loss of magnetic aperture to provide structural support against the pre-load forces in the magnet bore. In addition, conductor placement in the vicinity of the magnetic midplane is desirable for magnetic efficiency and field quality, but leads to deviations from a flat geometry in the coil ends, where the conductors have to clear the magnet bore.

HD2 represents a possible approach to these design issues. A stainless steel tube, inserted between the winding poles, provides the bore support. The coil ends are still of the racetrack type, but a ramp is included to avoid obstructing the beam path. The resulting design may represent a promising step toward an LHC energy doubler, in particular for upgrade scenarios involving a high field, single-turn injector with a limited dynamic range in the main collider ring.

Manuscript received October 5, 2004. Work supported by the Office of Energy Research, U.S Department of Energy under contract number DE-AC02-05CH11231.

G. Sabbi and all co-authors are with Lawrence Berkeley National Laboratory, Berkeley, CA. (phone: 510-495-2250; fax: 510-486-5310; e-mail: GLSabbi@lbl.gov)

III. HD2 Design

The HD2 magnet cross-section, shown in Fig. 1, combines two double-layer coil modules in a block configuration. The mechanical structure, similar to the one used for HD1 [10], is composed of horizontal and vertical load pads, bridges, yoke and aluminum shell. Interference keys located between pads and yokes tension the shell and compress the coil-pack in both the vertical and the horizontal direction. During the assembly, hydraulic bladders are used to provide clearance for inserting the keys [11]. Horizontal and vertical pushers transfer the load from the pads to the coils. Four aluminum rods provide axial pre-stress, to minimize displacements in the coil end regions.

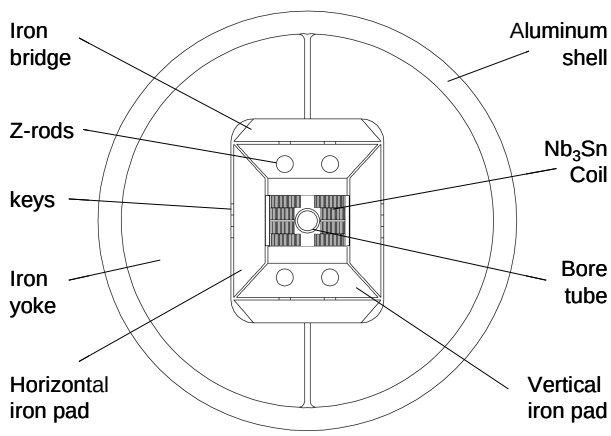

Fig. 1. HD2 magnet cross-section.

Fig. 2 shows a detail of the coil assembly. Each coil is a double-layer wound around an aluminum-bronze pole, with a minimum winding radius of 12.5 mm. There are 28 turns in the first layer (facing the magnetic mid-plane) and 33 turns in the second layer. The cable parameters are given in Table I. A 0.8 mm wire diameter is chosen due to practical considerations relating to strand availability. However, this design concept would be easily scalable to larger diameter wires, resulting in a better aspect ratio for the cable, lower cost of fabrication and lower inductance. The coil aperture is approximately square, 45 mm on each side. A mid-plane spacer separates the coils. The winding poles have a round cutout on the side facing the magnetic mid-plane. This cutout is used to assemble the coil modules around a 4 mm thick stainless steel tube, providing a 35 mm diameter clear bore.

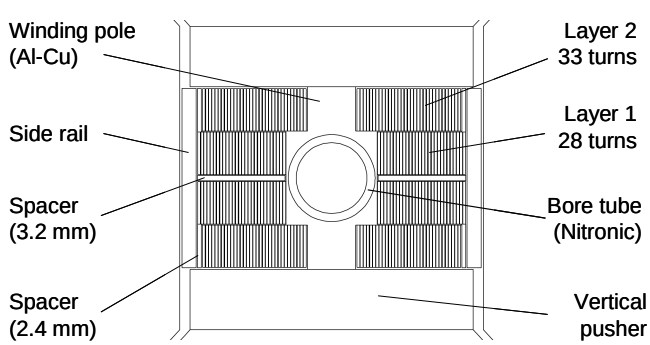

Fig 2. Coil module detail.

TABLE I
Conductor Parameters for HD2 and HD1*

Parameter	Unit	HD2	HD1
Strand diameter	mm	0.8	0.8
Average Ic (16 T, 4.2K)	A	322	322
Cu/Sc ratio		0.94	0.94
No. strands		48	36
Cable height	mm	21.0	15.75
Cable thickness	mm	1.36	1.36
Insulation thickness (h/v)	μm	93/130	93/130
No. turns/quadrant		61	69

(*) HD1: measured values; HD2: design values.

TABLE II
Field, Energy and Forces for HD2 and HD1

Parameter	Unit	HD2	HD1
Short sample current*	kA	15.2	11.4
Central dipole field	T	15.3	16.7
Coil peak field	T	16.1	16.1
Copper current density	kA/mm^2	1.3	1.3
Inductance	mH/m	7.7	10.2
Stored energy	MJ/m	0.89	0.66
Fx (quadrant)	MN/m	5.9	4.75
Fy (quadrant)	MN/m	-2.7	-1.55
Ave. Lorentz stress (x)	MPa	140	150

(*) Assuming same strand properties for HD2 as for HD1.

A. 2D Magnetic Analysis

The short sample parameters are shown in Table II. The coil peak field at short sample is about the same in HD2 as in HD1. The higher bore field in HD1 (by 1.4 T) is partly due to the contribution of the iron pole to the field in the (small) aperture. A non-magnetic pole is used in HD2, to avoid generating a saturation effect. The conductor volume and the stored energy increase in HD2 by 18% and 35%, respectively. These values are not large compared to the ratio between the coil apertures. In HD1, the size of the coil and bore were selected according to the high-field, high-stress objectives of the test; the HD2 design is comparatively more efficient. The Lorentz forces also show relatively modest increases. The inductance is lower in HD2, mainly due to the use of a higher current cable with fewer turns. As it was previously noted, the HD2 coil cross-section is suitable for a further increase of the wire (and cable) size. The resulting reduction of the inductance is beneficial for protection of long magnets in a large accelerator.

At full field (14-15 T) all design harmonics are below 0.2 units at 10 mm radius (R_{ref}). Despite the absence of inter-turn spacers in this coil, it is possible to optimize the geometric harmonics to low values by tuning the thickness of the mid-plane spacer, the number of turns in each layer, and the relative position of the two conductor blocks. In this design, the geometric harmonics b_3 and b_5 are very small and would be likely dominated by magnetization effects, iron saturation and random errors. The systematic b_7 and b_9 are larger, and reach the 1 "unit" threshold for R_{ref} >13 mm (74% of the clear bore, 58% of the coil aperture). An inter-turn spacer located in the pole area would be required to reduce these field errors. The yoke was not optimized for saturation effects. The saturation b_3 is within 1 unit in the range 7-15 kA, but reaches -14 units at 1 kA; the saturation b_5 is within 0.2 units at all currents.

B. 2D Mechanical Analysis

The mechanical design follows the approach developed for the LBNL "RD" series [11], and further advanced with HD1. A 40 mm thick aluminum shell surrounding the iron yoke halves provides horizontal support. Vertical support is mostly provided by the iron yoke, with additional contribution from the shell. During assembly, the shell is pre-tensioned to 55 MPa using hydraulic bladders. The required bladder pressures are 55 MPa in the horizontal direction and 50 MPa in the vertical direction. During cool-down to 4.2 K, the thermal contraction differentials between yoke and shell are exploited to generate a large increase of the pre-stress, preventing over-stress and possible conductor damage at room temperature. After cool-down, the stress in the shell reaches 165 MPa.

A critical new element in the HD2 design is represented by the bore structure supporting the coil against the pre-load. The main design objectives are: (a) limiting the stresses in the bore and the coils, while minimizing the thickness of the structure; (b) developing a process for the fabrication and assembly of the coil module; (c) minimizing the magnet cost. Fig. 3 shows the two main configurations that were analyzed. In case A, the main structural element is a stainless steel tube inserted in a round cavity provided by the AlCu winding poles. In case B, the internal support is provided by a stainless steel insert which extends to the interface with the coil layer 1. The insert in case B makes use of all the available space, resulting in a better stress distribution in the bore. However, the analysis showed that the most critical issue is not related to the peak stress in the bore, but rather to its deflections and their effect on the coil stress. In particular, as the preload increases during cool-down, the areas next to the square corners in case B will not deflect as much as the mid-plane area, generating a high stress point in the coil. Irreversible degradation of the conductor properties in this high-field location would compromise the capability of the magnet to reach its design field. In case A, the mid-plane deflections at cool-down are better matched across the inner layer, mainly due to the higher thermal contraction coefficient of the winding pole with respect to the tube. The results of the analysis (Fig. 4, left) still show a stress imbalance, but the peak is now at an acceptable level based on HD1 experience. During excitation, the stress in the coil region next to the pole decreases and a better balance is restored (Fig 4, right). The highest stress is now located in the low-field area of the coil, where margin is available and some degradation of the conductor properties can be tolerated without affecting the magnet performance. During excitation, the total displacement of layer 1 (first turn) is 90 μm, corresponding to $\Delta b_3 \sim 0.7$ units, $\Delta b_5 < 0.1$ units. The stress in the bore tube reaches 1000 MPa, requiring a stainless steel with a high yield point (Nitronic 40). The use of more advanced materials may also be explored in order to improve the performance.

On this basis, the design type A was selected for HD2. This approach also leads to a relatively simple procedure for coil fabrication. However, a successful implementation will require tight control of the dimensional tolerances, to achieve an accurate balance between the horizontal and vertical forces acting on the coil and the bore.

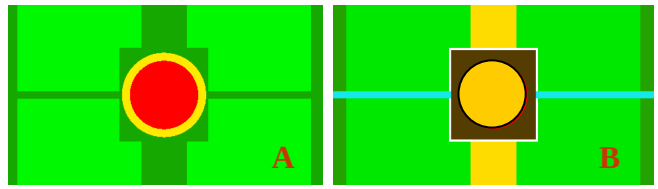

Fig. 3. Bore structure and assembly.

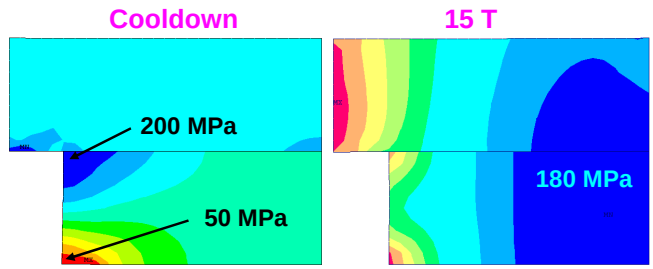

Fig. 4. Coil stress after cooldown and at full excitation (case A).

C. Coil End Design

Figure 5 illustrates the main features of the HD2 coil design. At the end of the straight section, a gentle hard-way bend is introduced to transition the blocks into a 10° flare. The radius of the hard-way bend is 100 mm on average (a factor of 5 with respect to the cable height) and its length is about 20 mm. After the hard-way bend, a flat racetrack end configuration is recovered for most of the turns, on a plane inclined by 10° with respect to the magnet axis. However, the turn located at the pole of layer 2 (transition side) does not follow the hard-way bend, but proceeds parallel to the magnet axis. In this way, as the main blocks are ramping away from the magnet axis, this turn will gradually transition from the elevation of layer 2 to the elevation of layer 1. Two 90° easy-way bends follow, the first using the layer 2 radius (12.5 mm), the second using the layer 1 radius (22.6 mm). A small hard-way bend component is also included, so that the inter-layer ramp can join the main path of the other turns in layer #1.

This technique was already used at LBNL to wind the coils of the D-10 block-dipole, which was the first Nb_3Sn magnet fabricated by this group. The D-10 coil winding was accomplished without significant difficulties, and the magnet reached a bore field of 8 Tesla [8].

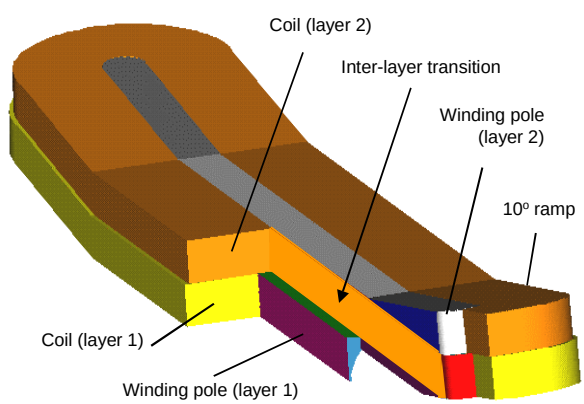

Fig. 5. HD2 coil end design features.

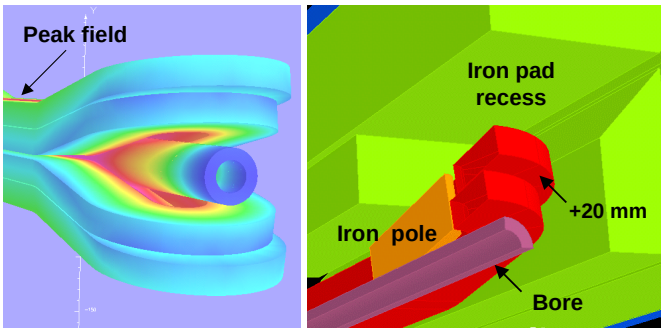

Fig 6. Left: coil end field. Right: field optimization features.

The magnetic field analysis of a preliminary HD2 coil (with no magnetic materials) showed a 5% field enhancement at the magnet ends with respect to the straight section. This effect is quite moderate compared to other designs, due to the end flare increasing the distance between coils. Several strategies were considered to reduce the end field, including: (a) relative shifts of the layer blocks (b) non-magnetic inserts in the iron pads; (c) iron inserts in the winding pole; (d) end spacers to spread the conductors apart. A combination of a vertical pad recess (as for HD1) and a 20 mm extension of the layer 2 ramp (with respect to the layer 1 ramp) results in a 6% field margin in the coil ends (Fig. 6). End spacers would be effective in further decreasing the field, but they are more difficult to implement than a relative shift of the blocks. A non-magnetic insert in the horizontal pad can also be effective, but is less favored mechanically since the Lorentz forces and stresses are larger in that direction. The use of an iron insert at the pole did not significantly improve the margin.

The mechanical structure design for the HD2 coil ends follows the approach used in HD1 [12]. In particular, thick end plates supported by four aluminum rods pre-stress the coil in the axial direction to minimize any conductor displacements due to the build-up of magnetic forces. Figure 7 shows the main structural components in the coil ends. The horizontal load is transferred to the coil by side rails that follow the end flare. In the vertical direction, a trapezoidal pusher is used to provide a flat pressure surface across the coil. The end shoes incorporate wedge-shaped fillers supporting the ramp. The analysis and optimization of this structure is still in progress.

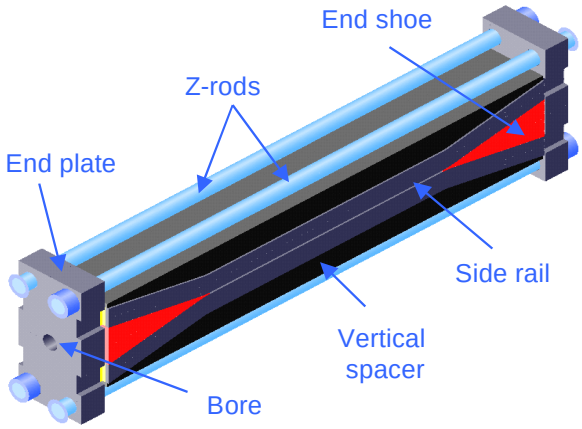

Fig. 7. Mechanical analysis model: coil module with end supports.

IV. Summary and Future Steps

The next step in the HD2 prototype development involves the fabrication of a model coil, to check and refine the winding procedures and the fabrication tooling. In parallel, a detailed optimization of the mechanical structure will take place. After these tasks are completed, the magnet design can be finalized and the prototype fabrication can start.

Assuming a successful test of HD2, several issues will need to be addressed to further advance the block-coil design as a possible candidate for future high-energy accelerators. In order to expand the options available to the accelerator designers, apertures in the range of 30-50 mm should be considered. Larger apertures will lead to increased magnetic forces and stored energy. Smaller apertures will be challenging from the field quality standpoint.

A further increase of the dipole field should also be pursued. Based on previous experience with large-scale production of accelerator magnets, in order to operate at a field of 15 T, the short sample limit should be 17-18 T (2-3 T higher than in HD2). This objective will require a combination of improved material properties, better design efficiency, and a complete understanding of the behavior of the coil and structure under large forces. The use of simplified models of the HD1 type may further contribute to the study of the technological issues involved. As a next step in this direction, an upgraded version of HD1 will be developed, aiming at a dipole field above 17 T. This goal may be achieved without major design changes, using the fabrication and testing experience from HD1 [13], improved conductor, and a lower operating temperature. However, a flared end of the HD2 type may also be included to bring the conductor closer to the magnetic mid-plane, leading to a further increase of the short sample field.

References

[1] P. Lefevre, T. Petterson (ed.), "The Large Hadron Collider - Conceptual Design", CERN/AC/95-05 (LHC), 1995.

[2] O. Brüning, et al., "LHC Luminosity and Energy Upgrade: A Feasibility Study", LHC Project Report 626, December 2002.

[3] R. Scanlan, D. Dietderich, "Progress and Plan for the U.S. Conductor Development Program", *IEEE Trans. Appl. Supercond.* Vol 13, June 2003, pp. 1536.

[4] A. McInturff, et al., "Test Results for a High Field (13 T) Nb_3Sn Dipole", PAC-97, Vancouver, May 1997.

[5] R. Benjegerdes, et al., "Fabrication and Test Results of a High Field, Nb_3Sn Superconducting Racetrack Dipole Magnet", PAC-2001.

[6] A. F. Lietzke, et al., "Test Results for HD1, a 16 T Nb_3Sn Dipole Magnet", *IEEE Trans. Appl. Supercond.* vol. 14, June 2004.

[7] S. Gourlay, G. Sabbi, "Future Expectations, Limits and Operational Issues for High Field Superconducting Accelerator Dipole Magnets", Proceedings of EPAC 2002, Paris, France.

[8] C. Taylor et al., "A Nb_3Sn dipole magnet reacted after winding", IEEE Trans. Magnetics Vol. MAG-21, No. 2, March 1985, pp. 967-970.

[9] T. Elliott, et al., "16 Tesla Dipole Development at the Texas A&M University", *IEEE Trans. Appl. Supercond.* Vol 7, No. 2, June 1997.

[10] R. Hafalia, et al., "HD1: Design and Fabrication of a 16 Tesla Nb_3Sn Dipole Magnet", *IEEE Trans. Appl. Supercond.* vol. 14, June 2004.

[11] S. Caspi, et al., "The use of Pressurized Bladders for Stress Control of Superconducting Magnets", *IEEE Trans. Appl. Supercond.* Vol.11, 2001.

[12] P. Ferracin, et al., "Mechanical Analysis of the Nb_3Sn Dipole Magnet HD1", these Proceedings.

[13] S. Mattafirri, "Performance Analysis of HD1: A 16 Tesla Nb_3Sn Dipole Magnet", these Proceedings.