The pan-genome of *Emiliania huxleyi*

Alan Kuo[1*], Betsy Read[2], and Igor Grigoriev[1]

[1]DOE Joint Genome Institute, Walnut Creek, CA, USA. [2]California State University, San Marcos, CA, USA
[*]Correspondence: akuo@lbl.gov

DOE JOINT GENOME INSTITUTE
US DEPARTMENT OF ENERGY
OFFICE OF SCIENCE

I. Abstract

Coccolithophores are a major group of phytoplankton and play a significant role in the carbon cycle, as their calcareous exoskeletons comprise half the carbonate in deep-sea sediments. The bloom species *Emiliania huxleyi* is globally distributed with multiple strains isolated from around the world. A model for coccolithophore biology, it has been the object of numerous morphological, physiological, and transcriptomic studies, and it is now the first coccolithophore to have its genome sequenced. The reference genome provides an opportunity for us to address an outstanding issue of *E. huxleyi* biology: its remarkable morphological, physiological, and genomic variation between isolates. Variability suggests that *E. huxleyi* may have a "pan-genome", where different strains of a single species possess a heterogeneous gene complement. We use the JGI Annotation Pipeline and the JGI EST Pipeline to exploit the reference genome in combination with transcriptomic data from two other strains and discover potentially strain-specific genes. Such genes provide evidence of inter-strain heterogeneity, though they do not fully characterize the *E. huxleyi* pan-genome.

II. Genome heterogeneity across strains, as measured by flow cytometry, and by Solexa resequencing of genomic DNA

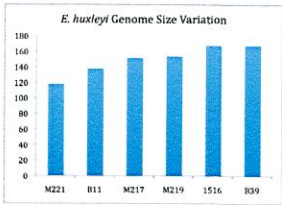

	Raw Reads	Filtered Reads	Alignments	% Coverage	Genes
Strain 1516	12,174,869	12,004,762	9,265,323	77.18	
Strain M219	7,384,973	3,654,804	2,036,000	55.70	28,684
Strain M217	12,011,216	7,321,212	5,435,165	74.23	32,911
Strain M221	12,822,275	6,861,847	1,333,136	19.43	25,784
Strain B39	8,154,341	5,381,208	4,001,719	74.36	32,244
Strain B11	9,819,349	9,477,524	6,020,321	63.52	32,388
			Totals	93.60	

III. Stategy to use the genomic assembly and ESTs from multiple strains to discover strain-specific genes

Reference strain
CCMP1516

2 other strains
CCMP371 and RCC1216/7

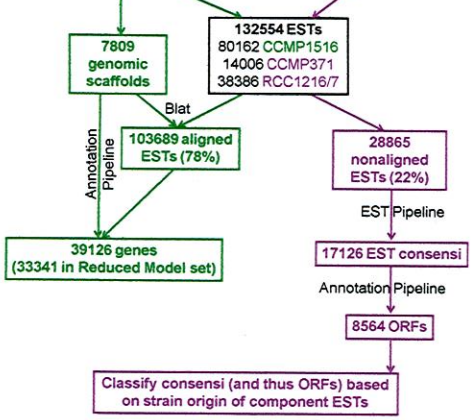

IV. ORFs binned by strain

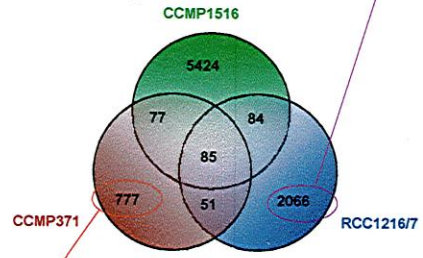

V. A candidate CMP371-specific hydrolase

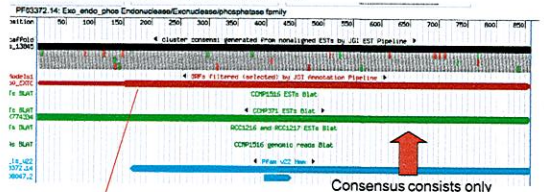

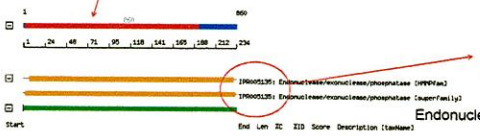

Endonuclease/Exonuclease/phosphatase family

VI. A candidate RCC1216/7-specific transcription factor

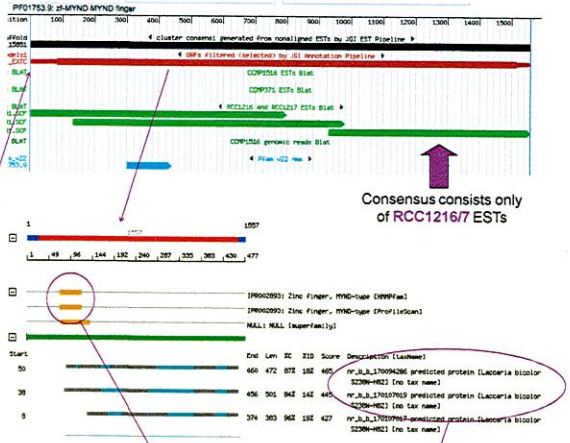

MYND finger

No similar CCMP1516 genes.
Most similar proteins are fungal.

VII. Conclusions

1. 22% ESTs do not align with scaffolds.
2. EST Pipeline assembles 17126 consensi from the nonaligned ESTs.
3. Annotation Pipeline predicts 8564 ORFs on the consensi.
4. Tracking ESTs provides evidence for a pan-genome by revealing 2894 potentially strain-specific ORFs.

VIII. Credits

CSUSM
Xiaoyu Zhang
Betsy Read

SB-Roscoff
Peter von Dassow
Hiroyuki Ogata
Colomban de Vargas

JGI EST Pipeline
Jasmyn Pangilinan
Jeff Froula
Erika Lindquist

JGI Annotation Pipeline
Bobby Otillar
Frank Korzeniewski
Asaf Salamov
Andrea Aerts

This work was performed under the auspices of the US Department of Energy's Office of Science, Biological and Environmental Research Program, and by the University of California, Lawrence Berkeley National Laboratory under contract No. DE-AC02-05CH11231, Lawrence Livermore National Laboratory under Contract No. DE-AC52-07NA27344, and Los Alamos National Laboratory under contract No. DE-AC02-06NA25396.