Lawrence Berkeley National Laboratory

Biosafety Manual

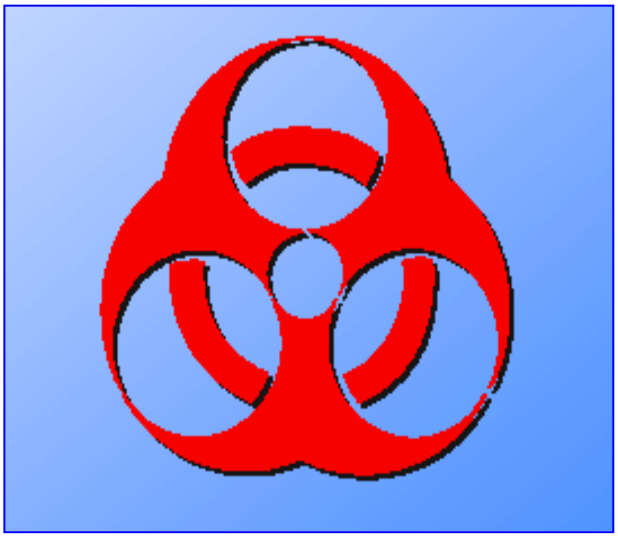

The Institutional Biosafety Committee and Industrial Hygiene Group Environment, Health, and Safety Division

May 18, 2010

This work was supported by the U.S. Department of Energy under Contract No. DE-AC02-05CH11231.

Printed copies are not official versions of this manual. Before using the printed copy, verify that it is the most current version.

Biosafety Manual

Contents

1.0 Introduction
- 1.1 Policy
- 1.2 Purpose
- 1.3 Scope
- 1.4 Manual Administration and Presentation
- 1.5 Terms, Acronyms, and Abbreviations
- 1.6 Roles, Responsibilities, and Whom to Call

2.0 Starting and Conducting Work Safely

3.0 Work and Risk Assessment
- 3.1 LBNL Assessment and Authorization Processes
- 3.2 Biosafety Risk Assessment Process
- 3.3 Material or Agent Hazards and Requirements
  - 3.1.1 Risk Group Classification
  - 3.3.2 Pathogenic Agents and Toxins
    - 3.3.2.1 Pathogen and Toxin Information and Guidance
    - 3.3.2.2 Human Pathogens
    - 3.3.2.3 Plant and Animal Pathogens
    - 3.3.2.4 Biological Toxins
    - 3.3.2.5 Select Agents and Toxins
    - 3.3.2.6 Prions
  - 3.3.3 USDA-Regulated Materials, Organisms, and Agents
  - 3.3.4 Bloodborne Pathogens and Human Materials
  - 3.3.5 Recombinant Materials, Organisms, and Agents
  - 3.3.6 Animals
- 3.4 Laboratory Procedure Hazards
- 3.5 Worker Competence and Health

4.0 Biosafety Principles and Levels
- 4.1 Laboratory Practices
- 4.2 Safety and Personal Protective Equipment
- 4.3 Facility Design and Construction
- 4.4 Biosafety Containment Levels and Criteria
  - 4.4.1 Laboratory Containment Levels
    - 4.4.1.1 Laboratory Biosafety Level 1
    - 4.4.1.2 Laboratory Biosafety Level 2
  - 4.4.2 Additional Containment Categories
    - 4.4.2.1 Recombinant Large-Scale Containment Levels
    - 4.4.2.2 Recombinant Plant Containment Levels
    - 4.4.2.3 Vertebrate Animal Containment Levels
    - 4.4.2.4 Arthropod Containment Levels

5.0 Specific Biosafety Controls
- 5.1 Work Authorizations
- 5.2 Training, Instruction, and Qualification
  - 5.2.1 Job Hazards Analysis
  - 5.2.2 Training Courses and Tracking
  - 5.2.3 Job-Specific Instruction, Information, and Practices
- 5.3 Occupational Health and Immunization
- 5.4 Personal Protective Clothing and Equipment
  - 5.4.1 Body Protection
  - 5.4.2 Eye and Face Protection
  - 5.4.3 Hand Protection
  - 5.4.4 Foot Protection
  - 5.4.5 Respiratory Protection, Respirators, and Face Masks
- 5.5 Labels and Signs
- 5.6 Facilities, Laboratory Equipment, and Related Practices
  - 5.6.1 Cleanable Surfaces and Furnishings
  - 5.6.2 Doors and Windows
  - 5.6.3 Plumbing Systems and Equipment
    - 5.6.3.1 Sinks and Handwashing
    - 5.6.3.2 Drains and Disposal
    - 5.6.3.3 Water Systems and Backflow Prevention
    - 5.6.3.4 Emergency Eyewashes and Showers
  - 5.6.4 Ventilation and Hoods
    - 5.6.4.1 Room Ventilation
    - 5.6.4.2 Hoods and Biosafety Cabinets
  - 5.6.5 Food Facilities and Eating
  - 5.6.6 Laboratory Tools and Equipment
    - 5.6.6.1 Sharps
    - 5.6.6.2 Centrifuges
    - 5.6.6.3 Waste Containers
    - 5.6.6.4 Equipment Connected to Building Vacuum Systems
- 5.7 Decontamination, Waste, and Decommissioning
  - 5.7.1 Decontamination Processes and Antimicrobials
  - 5.7.2 Surface and Equipment Decontamination
  - 5.7.3 Waste Decontamination and Disposal
  - 5.7.4 Laboratory and Equipment Decommissioning and Moves
- 5.8 Access and Security
- 5.9 Pest Management
- 5.10 Incident, Accident, and Emergency Response
  - 5.10.1 General Incident Response and Reporting
  - 5.10.2 Worker Exposure, Injury, or Illness
  - 5.10.3 Biological Spills and Cleanup
  - 5.10.4 Additional Biosafety Incident Reporting
- 5.11 Procurement, Transportation, and Transfer
  - 5.11.1 Procurement
  - 5.11.2 Transportation and Shipping
  - 5.11.3 Import, Export, and Transfer Restrictions

6.0 Assessment and Improvement

7.0 Standards, Policies, References, and Resources
7.1 Standards
7.2 Policies
7.2.1 *Health and Safety Manual* (PUB-3000) Chapters
7.2.2 Other Biosafety-related LBNL Publications
7.3 References
7.4 Resources

Appendices

Appendix A Glossary

Appendix B Pathogen and Toxin Lists
B.1 Introduction and Scope
B.2 *NIH Guidelines* Human Etiologic Agents
B.2.1 Risk Group 1 Agents
B.2.2 Risk Group 2 Agents
B.2.3 Risk Group 3 Agents
B.2.4 Risk Group 4 Agents
B.2.5 Animal Viral Etiologic Agents in Common Use
B.2.6 Murine Retroviral Vectors
B.3 Select Agents and Toxins
B.4 Plant Pathogens
B.4.1 Plant Pathogen Bacteria (by Scientific Name)
B.4.2 Plant Pathogen Fungi (by Scientific Name)
B.4.3 Plant Pathogen Viruses (Regulated by the State of California)

Appendix C Laboratory Biosafety Level 1 and 2 Criteria
C.1 Introduction and Scope
C.2 Laboratory Biosafety Level 1
C.2.1 BL1 Standard Microbiological Practices
C.2.2 BL1 Special Practices
C.2.3 BL1 Safety Equipment (Primary Barriers and Personal Protective Equipment)
C.2.4 BL1 Laboratory Facilities (Secondary Barriers)
C.3 Laboratory Biosafety Level 2
C.3.1 BL2 Standard Microbiological Practices
C.3.2 BL2 Special Practices
C.3.3 BL2 Safety Equipment (Primary Barriers and Personal Protective Equipment33)
C.3.4 BL2 Laboratory Facilities (Secondary Barriers)

Appendix D Good Microbiological Practice
D.1 Introduction and Scope
D.2 Good Microbiological Practice
D.2.1 Aseptic Technique
D.2.2 Personal Hygiene and Dress
D.2.3 Area Cleanliness and Organization

D.2.4 Biosafety Cabinets and Airborne Contamination
D.2.5 Manipulation Techniques for Minimizing Aerosols
D.2.6 Worker Qualifications
D.2.7 Microbial Contamination Checks
D.3 References

Appendix E Biosafety Cabinets
E.1 Introduction and Scope
E.2 Biosafety Cabinet Classifications
E.2.1 Class I Biosafety Cabinet
E.2.2 Class II Biosafety Cabinet
E.2.3 Class III Biosafety Cabinet
E.2.4 Clean Benches (Not BSCs)
E.3 Biosafety Cabinet Work Practices and Procedures
E.3.1 Preparing for BSC Work
E.3.2 Material Placement inside the BSC
E.3.3 Operations within a Class II BSC
E.4 Biosafety Cabinet Decontamination and Moves
E.4.1 Cabinet Surface Decontamination
E.4.2 Internal Cabinet Gaseous Decontamination
E.5 Biosafety Cabinet Installation and Engineering
E.6 Biosafety Cabinet Testing and Certification

Appendix F Decontamination and Antimicrobials
F.1 Introduction and Scope
F.2 Decontamination Principles and Terms
F.2.1 Decontamination Processes and Levels
F.2.1.1 Sterilization
F.2.1.2 Disinfection
F.2.1.3 Sanitization
F.2.1.4 Antisepsis
F.2.2 Antimicrobial Categories
F.2.3 Antimicrobial Selection and Registered Disinfectants
F.3 Chemical Antimicrobials
F.3.1 Surfactants (Soaps and Detergents)
F.3.1.1 Soaps
F.3.1.2 Detergents and Quaternary Ammonium Compounds
F.3.2 Halogens (Chlorine and Iodine)
F.3.2.1 Chlorine and Sodium Hypochlorite
F.3.2.2 Iodine and Iodophors
F.3.3 Alcohols
F.3.4 Phenol and Phenol Derivatives (Phenolics)
F.3.5 Oxidizing Agents (Hydrogen Peroxide)
F.3.6 Alkylating Agents (Formaldehyde, Glutaraldehyde, Ethylene Oxide)
F.3.6.1 Formaldehyde
F.3.6.2 Glutaraldehyde
F.3.6.3 Ethylene Oxide
F.4 Physical Antimicrobials

F.4.1 Heat
F.4.1.1 Dry Heat (Baking and Incineration)
F.4.1.2 Wet Heat (Boiling and Autoclaving)
F.4.2 Ultraviolet (UV) Radiation
F.4.2.1 UV Light Health Effects and Categories
F.4.2.2 Biosafety Cabinet UV Light
F.4.3 Ionizing Radiation
F.4.4 Visible Light
F.4.5 Filtration (HEPA Filters)
F.5 Autoclave Sterilization and Safety
F.5.1 Autoclaves and Sterilization
F.5.2 Autoclave Operation and Safety
F.5.2.1 Autoclave Instruction
F.5.2.2 Autoclave Operation Modes
F.5.2.3 Autoclave Container Selection
F.5.2.4 Autoclave Preparation and Loading
F.5.2.5 Autoclave Cycle and Time Selection
F.5.2.6 Removing Autoclave Loads
F.5.2.7 Autoclave Material Staging
F.5.2.8 Burn Emergencies
F.5.3 Autoclave Maintenance and Monitoring
F.6 References

Appendix G Biological Spills and Cleanup
G.1 Introduction and Scope
G.2 Precleanup Considerations
G.3 Biological Spill outside a Biosafety Cabinet
G.4 Biohazardous Spill inside a Biosafety Cabinet
G.5 Centrifuge Malfunction or Spill
G.6 Radioactive and Biohazardous Spill
G.7 Chemical and Biohazardous Spill
G.8 Cleanup of Small Dead Animals, Nests, or Droppings

Appendix H Transportation and Shipping
H.1 Introduction and Scope
H.2 How to Determine Transportation Mode and Requirements
H.3 Requirements and Processes for Receiving, Transporting, and Shipping
H.3.1 Employee Transportation of Materials
H.3.1.1 Hand-Carry Transport between Laboratories
H.3.1.2 Hand-Carry Transport between Buildings
H.3.1.3 Personal Transportation in a Motor Vehicle
H.3.1.4 Personal Transportation on an LBNL Bus
H.3.2 LBNL Receiving, Transportation, and Shipping
H.3.2.1 LBNL Receiving
H.3.2.2 LBNL Transportation
H.3.2.3 LBNL and Common Carrier Shipping
H.4 Unregulated and Regulated Materials
H.4.1 Unregulated Biological Materials
H.4.2 Regulated Biological Materials
H.5 References and Resources

Appendix I Import, Export, and Transfer Restrictions
I.1 Introduction and Scope
I.2 Importing or Transfer into the U.S. and California
I.2.1 CDC and APHIS Select Agent and Toxin Restrictions
I.2.2 APHIS Agricultural Permits
I.2.2.1 APHIS Plant Health Permits
I.2.2.2 APHIS Animal Health Permits
I.2.2.3 APHIS Genetically Engineered Organisms Permits
I.2.3 CDC Agents or Vectors of Human Disease Permits
I.2.4 Food and Drug Administration Import Program
I.2.5 Fish and Wildlife Service Permits
I.3 Exporting or Transfer from the U.S.
I.3.1 Commerce Control List
I.3.2 U.S. Munitions List
I.3.3 Biological Weapons Convention Lists
I.4 References

Tables

Table 1 Guidance for Starting and Conducting Work
Table 2 Risk Group Classification
Table 3 Pathogenic Agent and Toxin Categories
Table 4 Materials Regulated by USDA-APHIS
Table 5 Materials Covered by the OSHA Bloodborne Pathogens Standard
Table 6 Examples of Zoonotic and Other Diseases Related to Animals
Table 7 Equipment Hazard Examples
Table 8 Laboratory Biosafety Containment Levels
Table 9 Additional Containment Categories
Table 10 Biosafety-Related Training Courses
Table 11 Decontamination Processes, Levels, and Antimicrobial Examples
Table B-1 National Select Agent Registry Select Agents and Toxins
Table B-2 Additional Information for National Select Agent Registry Toxins
Table E-1 Protection Offered by Classes of Biosafety Cabinets
Table E-2 Characteristics of Biosafety Cabinet Classes
Table F-1 Levels of Chemical Disinfection
Table F-2 Activity Levels of Selected Liquid Germicides
Table F-3 Descending Order of Organism Resistance to Germicidal Chemicals
Table H-1 Transportation Modes and Biological Materials Not Allowed
Table I-1 Wildlife or Plant Specimens That May Require an FWS Permit
Table I-2 Commerce Control List of Biological Agents
Table I-3 BWC Agents Not On the Commerce Control List

1.0 Introduction

1.1 Policy

Work with or potential exposure to biological materials in the course of performing research or other work activities at **Lawrence Berkeley National Laboratory (LBNL)** must be conducted in a safe, ethical, environmentally sound, and compliant manner. Work must be conducted in accordance with established biosafety standards, the principles and functions of **Integrated Safety Management (ISM)**, this *Biosafety Manual*, Chapter 26 (*Biosafety*) of the ***Health and Safety Manual*** **(PUB-3000)**, and applicable standards and LBNL policies.

1.2 Purpose

The purpose of the Biosafety Program is to protect workers, the public, agriculture, and the environment from exposure to biological agents or materials that may cause disease or other detrimental effects in humans, animals, or plants. This manual provides workers; line management; **Environment, Health, and Safety (EH&S)** Division staff; **Institutional Biosafety Committee (IBC)** members; and others with a comprehensive overview of biosafety principles, requirements from biosafety standards, and measures needed to control biological risks in work activities and facilities at LBNL.

1.3 Scope

This *Biosafety Manual* and the Biosafety Program apply to biosafety issues related to worker safety, public health, agricultural protection, and environmental protection for work activities at locations where LBNL has **Environment, Safety, and Health (ES&H)** management responsibilities. The work must also include:

- Biological materials, agents, and other materials of biological origin (e.g., organisms, cells, viruses, and toxins) that pose different levels of risk to humans, animals, or plants when stored or used; or
- Workers who may be exposed to disease-causing biological agents related to designated job duties (e.g., bloodborne pathogens in health care).

The *Biosafety Manual* addresses:

- Biosafety risk assessment and containment controls.
- Principles, programmatic elements, and controls required by ISM and the biosafety standards outlined in PUB-3000, Section 26.5.

1.4 Manual Administration and Presentation

The *Biosafety Manual* was written by the EH&S Division, and approved by the IBC and the EH&S Division Biosafety Officer. The EH&S Division Director provides management approval.

The *Biosafety Manual* is presented in a manner that:

- Further describes requirements outlined in PUB-3000, Chapter 26 (*Biosafety*).
- Integrates similar requirements by topic from different biosafety standards and LBNL policies, and explains when certain requirements are applicable to specific work.

- Is similar to the structure of ***Biosafety in Microbiological and Biomedical Laboratories*** (**BMBL**, fifth edition).
- Links to LBNL policies and biosafety regulations, standards, and guidelines available online.

1.5 Terms, Acronyms, and Abbreviations

Terms, acronyms, and abbreviations used in this manual are defined in the Glossary (Appendix A).

Statements used in this manual that describe needed conditions commonly use the terms "**must"** and "**should**." In addition, sections of the manual sometimes begin by stating that the conditions presented in the section are "**guidelines**." These terms are defined below:

- **Must** means the condition is required. Requirements are derived from LBNL ES&H standards or LBNL policies.
- **Should** means there is an expectation that the condition will be met unless there is an equally forceful reason for not meeting the condition, and an alternative approach that does not conflict with other requirements and accomplishes the same safety objective. When the term "should" is used in guidelines, the condition is a best-management practice, and the condition or safe alternatives will be implemented when needed to control apparent risk.
- **Guidelines** are a set of nonmandatory but desirable criteria, conditions, or best-management practices that should typically be considered when determining controls needed to mitigate risk.

When determining if a needed condition must or should be implemented, or is recommended, the reader of this manual should read all parts of the statement or section and use term definitions (see Appendix A, Glossary) as needed to determine the applicability of the condition to the work to be conducted.

1.6 Roles, Responsibilities, and Whom to Call

Biosafety-related roles and responsibilities are covered in Section 26.4 and Appendix B of PUB-3000, Chapter 26 (*Biosafety*).

The Biosafety Officer in the EH&S Industrial Hygiene Group has primary oversight responsibility for this manual, but other groups and individuals also provide specific subject matter expertise, program management, or direction. The following groups or individuals may be contacted for additional information:

- The Industrial Hygiene Group of the EH&S Division and the Biosafety Officer at (510) 495-2768 or (510) 486-7837
- The Waste Management Group of the EH&S Division and the Medical/Biohazardous Waste Coordinator at (510) 486-7579
- The Health Services Group of the EH&S Division at (510) 486-6266
- The Training Group of the EH&S Division at (510) 495-2228
- The EH&S Division Web site at (510) 486-5514
- The Security and Emergency Operations Group of the EH&S Division at (510) 486-6234
- Division Safety Coordinators

2.0 Starting and Conducting Work Safely

This section and Table 1 provide a simplified list to assist supervisors, work leads, and principal investigators in getting work with biological materials planned, assessed, authorized, and conducted. Specific sections of this manual and PUB-3000, Chapter 26 (*Biosafety*) should be consulted for additional information and requirements:

Table 1
Guidance for Starting and Conducting Work

Guidance	LBNL Policy Section
Work Operation Planning, Risk Assessment, Authorization, and Control Complete and maintain a Biosafety Work Authorization (i.e., **Biological Use Authorization (BUA), Biological Use Registration (BUR), Biological Use Notification (BUN),** or **Exposure Control Plan (ECP)**) and any other required authorization. The Biosafety Work Authorization documents the work, risks, and controls. Implement the controls listed in the authorization.	*Biosafety Manual*, Section 5.1
• Complete the Biological Use Application Form for research with biological materials.	PUB-3000, Section 26.8.2
o Submit the application form to the Environment, Health, and Safety (EH&S) Biosafety Office (BWKing@lbl.gov and VMXian@lbl.gov) for review by the Institutional Biosafety Committee (IBC) and/or Biosafety Officer.	PUB-3000, Section 26.8.2
o Resolve any review comments.	
o Work with the Biosafety Office to get the completed Biosafety Work Authorization signed and authorized. The Biosafety Office will load the authorization into the **Biosafety Authorization System (BAS)**.	PUB-3000, Table 26-6
o Ensure workers are familiar with the authorization document, understand the required controls, and are trained.	*Biosafety Manual*, Section 5.2
o Ensure the containment controls noted in the authorization document are implemented. Also implement applicable controls noted in PUB-3000, Chapter 26 (*Biosafety*) and the *Biosafety Manual*. Standard **Laboratory Biosafety Level (BL)** 1 and BL2 criteria are summarized in Appendix C.	*Biosafety Manual*, Sections 4.0 and 5.0
o Update personnel, biosafety training, and work locations as needed in the BAS.	
o Update and submit for review the authorization document to the Biosafety Office prior to the target renewal date. Ensure authorization document is re-authorized as needed.	PUB-3000, Table 26-6

Guidance	LBNL Policy Section
• Complete and submit an Exposure Control Plan for nonresearch work that involves exposure to bloodborne pathogen materials.	PUB-3000, Section 26.8.3
• Complete and get approval on any required protocols for research involving vertebrate animals or human subjects (including human-derived data or human-derived tissues) via the **Animal Welfare and Research Committee (AWRC)** or **Human Subjects Committee (HSC)**, respectively.	PUB-3000, Chapter 22
Worker Authorization and Control Identify the work, hazards, and controls for each worker or subcontractor and ensure the controls are implemented. Ensure each worker completes:	
• A **Job Hazards Analysis (JHA)** or **Subcontractor Job Hazards Analysis and Work Authorization (SJHAWA)**.	*Biosafety Manual*, Section 5.2.1
• Required controls on their JHA or SJHAWA, including required training courses.	*Biosafety Manual*, Section 5.2.2
• Applicable job and operation-specific instruction related to biosafety.	*Biosafety Manual*, Section 5.2.3
• Any required medical surveillance noted on their JHA, SJHAWA, or work authorization document.	*Biosafety Manual*, Section 5.3
Assessment and Improvement • Assess and continuously improve the biosafety of the work.	PUB-3000, Section 26.9
• Conduct periodic biosafety assessments of the operation as specified in the Division Self-Assessment Program, including assessment of the safety of tasks being performed, safety of the work area and equipment, training, and compliance with the Biosafety Work Authorization and standards.	PUB-3000, Section 26.9
• Participate in periodic Biosafety or other Environment, Safety, and Health (ES&H) **Technical Assurance Program (TAP)** assessments of the operation, when scheduled.	PUB-3000, Section 26.9
• Continuously improve the biosafety of the work, including tracking and correcting deficiencies when required in the **Corrective Action Tracking System (CATS)**.	PUB-3000, Section 26.9
Whom to Call Refer to the Whom to Call list in Section 1.6.	*Biosafety Manual*, Section 1.6

Work with biological materials, like all work at LBNL, must be conducted using the guiding principles and five core functions of Integrated Safety Management (ISM) (e.g., define scope of work, analyze hazards, develop and implement controls, perform work within controls, feedback and continuous improvement) as discussed in PUB-3000, Section 1.4. These core functions are integrated into the work authorization and control functions summarized above in Table 1.

3.0 Work and Risk Assessment

The work scope must be defined and the hazards and risks must be assessed before work begins. These work-planning processes are the first two core ISM functions and required by biosafety standards. Biological work and risks at LBNL are defined using established institutional assessment and authorization processes, a structured approach as required by the **Department of Energy (DOE)**, and the standard biosafety risk assessment process defined by the **Centers for Disease Control and Prevention (CDC)** and the **National Institutes of Health (NIH)**. It is a primary responsibility of workers, work leads, and supervisors to ensure these processes are implemented before work begins.

3.1 LBNL Assessment and Authorization Processes

LBNL uses the following institutional assessment and authorization processes and documents to define work, identify biological hazards and potential exposures, assess biological risks, and establish biosafety controls:

- A Job Hazards Analysis (JHA) is prepared for each worker (see PUB-3000, Chapter 32).
- A Subcontractor Job Hazards Analysis and Work Authorization (SJHAWA) is prepared for each subcontractor, vendor, or guest (see Chapter 31).
- Biosafety Work Authorizations are prepared for work with biological materials in specific operations or projects. In the case of research involving biological materials, the Institutional Biosafety Committee **(**IBC) reviews and approves the definition of work, risk assessment, and controls as part of the authorization process. See Section 5.1 below and PUB-3000, Section 26.8, for details.

3.2 Biosafety Risk Assessment Process

The institutional assessment and authorization processes and documents noted in Section 3.1 above incorporate the standard biosafety risk assessment process defined and required by CDC, NIH, and DOE in the *Biosafety in Microbiological and Biomedical Laboratories* (BMBL), the ***NIH Guidelines for Research Involving Recombinant DNA Molecules*** **(*NIH Guidelines*)**, and the **Worker Health and Safety Program (WSHP)**.

The standard biosafety risk assessment process starts with considering three primary factors: 1) the inherent work hazard posed by the biological material or agent, 2) the susceptible hosts (i.e., receptors) that may be affected by the material or agent, and 3) the exposure pathways between the threat hazard and the susceptible host.

In addition, BMBL outlines the following five-step approach for laboratory supervisors and work leads to assess biological risk and to select controls for laboratory work:

1. Identify material or agent hazards, and perform an initial risk assessment.
2. Identify laboratory procedure hazards.
3. Make a final determination of the appropriate biosafety containment level, and select additional controls indicated by the risk assessment.
4. Evaluate a worker's proficiency in safe work practices, and ensure the integrity of safety equipment.
5. Review the risk assessment with the biosafety professional, subject matter expert, and the IBC.

The remaining sections of Section 3.0 below present in greater detail the key factors underlined above that must be considered when conducting risk assessments and selecting controls. Primary factors include material or agent hazards (perceived or real) and procedure hazards. Secondary factors include staff proficiencies and other personal factors.

See Section II of BMBL for more information on biological risk assessment.

3.3 Material or Agent Hazards and Requirements

The material or agent hazard(s) and associated requirements must be considered at the start of the risk assessment. Terms used to describe biological materials must also be defined and understood before a risk assessment takes place. This is because these terms often have specific meanings, associated requirements, and associated lists (see below):

The term **biological materials** is used in this manual, PUB-3000 (Chapter 26), and the risk assessment process to describe a broad range of organisms, cells, viruses, and other materials of biological origin that pose differing levels of risks to plants, animals, or humans.

The term **biological agent** or **agent** is used to describe a specific biological organism or material that is often directly responsible for producing an effect (e.g., disease). Examples of biological agents include a microorganism (e.g., bacterium, fungus, or parasite), virus, prion, or biological toxin. For example, humans are composed of tissues that contain blood; the blood contains fluids and cells; and the blood may contain the viral pathogen hepatitis B. Although the human body, tissues, blood, cells, fluids, and pathogens are all biological materials, only the hepatitis B virus is a biological agent.

In addition, the risk assessment should consider the state or treatment of the biological material that may change or eliminate the hazardous characteristics of the material, and this information should be included in the Biosafety Work Authorization when the information significantly describes the safety aspects of the work. For example, biohazardous characteristics of a biological material may not be present if the material is in a nonviable, fixed, inactive, or decontaminated state. These terms are listed below along with simplified definitions and examples:

- **Nonviable** means the material or agent is not capable of living or developing under favorable conditions. Examples include sections of plant or animal tissue that are often not capable of propagating, and extracts of biological samples such as DNA or RNA that cannot replicate without cells. These materials may not pose risks as long as there is no potential for the presence of pathogens.
- **Fixed** means the material has been treated so that it has been stabilized and preserved in place. For example, properly fixing cells with paraformaldehyde or glutaraldehyde typically kills the cells and most potential pathogens.

- **Inactive** means the material is not capable of acting or reacting normally. For example, infectious proteins (i.e., prions) may be inactivated by chemical destruction.
- **Decontaminated** means the material has been treated (e.g., sterilized or disinfected) so that biological contaminants or components have been reduced or inactivated to an acceptable level to reduce or eliminate the possibility of transmission of pathogens to undesired hosts. For example, fresh human bones may be decontaminated internally by radiation.

Biological material and agent hazards are further covered in Section 3.3 as follows:

- The **risk group (RG)** classification system used to categorize agents and materials based on the risk of disease in humans (see Section 3.3.1 below)
- Biological risks and concerns related to the following categories of biological materials and agents:
  - Pathogenic agents and toxins (see Section 3.3.2 below)
  - **U.S. Department of Agriculture (USDA)**-regulated materials, organisms, and agents (see Section 3.3.3 below)
  - Bloodborne pathogens and human materials (see Section 3.3.4 below)
  - Recombinant materials, organisms, and agents (see Section 3.3.5 below)
  - Animals (see Section 3.3.6 below)

3.3.1 Risk Group Classification

The principal hazardous characteristics of the agents that are present, or may be present in the biological material, must be considered while completing the initial risk assessment. This consideration includes an assessment of the agent's capability to infect and cause disease in a susceptible human or other host, the severity of disease, and the availability of preventive measures and effective treatments. To facilitate this assessment process, the **World Health Organization (WHO)** and NIH established an agent risk group (RG) classification for laboratories. This RG classification system, which was also adopted by the CDC, describes four general RGs based on the hazardous characteristics of agents, and the transmission route of natural disease in humans.

LBNL uses the four RG levels and definitions provided in Appendix B of the U.S.-based *NIH Guidelines* (see Table 2 below). As shown in Table 2, a higher RG level indicates a higher risk for disease in humans. Assignments of RGs to specific agents may be found in various sources, including:

- Appendix B, Section B.2, of this manual: Provides a list of human pathogens and their RG designations as excerpted from Appendix B of the *NIH Guidelines* (Classification of Human Etiologic Agents on the Basis of Hazard)
- The **American Biological Safety Association (ABSA)** Risk Group Database

Table 2
Risk Group Classification

Risk Group (RG) Level	Risk Group Definition
1	Agents that are not associated with disease in healthy adult humans
2	Agents that are associated with human disease that is rarely serious, and for which preventive or therapeutic interventions are *often* available
3	Agents that are associated with serious or lethal human disease for which preventive or therapeutic interventions *may be* available (high individual risk but low community risk)
4	Agents that are likely to cause serious or lethal human disease for which preventive or therapeutic interventions are *not usually* available (high individual risk and high community risk)

Source: Adapted from the NIH Guidelines, Appendix B, Table 1.

As required by LBNL policy, each biological material or agent used for research must be categorized by RG in the Biosafety Work Authorization, and the RG must be based on the agent's or material's potential for causing disease in humans. This categorization should be based on the following principles:

- Agents must be assigned the RG designated by NIH, unless a risk assessment in the Biosafety Work Authorization indicates an alternate RG is warranted for the specific agent to be used.
- Agents not classified as RG2, 3, or 4 by NIH are not automatically or implicitly classified as RG1. A risk assessment must be conducted for unclassified agents based on their known properties and relationship to agents listed in NIH RGs.
- Some information sources for biological agents (e.g., see Section 3.3.2.1) only state the recommended **biosafety level (BL)** to be used for the agent. An agent's recommended BL is typically the same as its RG (i.e., RG2 agents are handled at BL2). If an agent has not been assigned an RG by NIH, the risk assessment process must be used to determine its BL. See Section 4.4 for information on BLs.
- Bloodborne pathogen materials should be designated RG2. This is because BMBL specifies BL2 containment practices for bloodborne pathogen materials and compliance with the OSHA Bloodborne Pathogens Standard (see Section 3.3.4).

3.3.2 Pathogenic Agents and Toxins

The risk assessment includes identification and assessment of the pathogenic agents or toxins that are involved with the work, or may be present in the biological material. A **pathogen** is an infectious microbe (e.g., bacteria, protozoa, fungi, viruses, etc.) or other agent (e.g., prion) that causes disease in a healthy host organism such as a human, animal, or plant. A **toxin** is a poisonous substance produced by a living organism.

Depending on potential hosts and impacts (e.g., humans or livestock), pathogens and toxins may be regulated by a variety of agencies. Table 3 below and the remainder of this section identify categories of pathogens and toxins used in biosafety standards and by regulatory agencies to identify agents, toxins, and associated requirements. Appendix B of this manual also provides lists of many pathogens and toxins.

Table 3
Pathogenic Agent and Toxin Categories

Agent or Toxin Category	Agent or Toxin Subcategory	General Example or Source
Human Pathogens	Human Etiologic Agents (*NIH Guidelines*)	Risk Group 2, 3, or 4 agents such as the bacterial, fungal, parasitic, viral, and rickettsial agents listed in Appendix B of the *NIH Guidelines*
	Human Pathogens (BMBL)	Bacterial, fungal, parasitic, rickettsial, viral, and arbovirus agents that are included in BMBL agent summary statements and require BL2 or greater containment
	Biological Etiologic Agents (DOE WSHP)	Human pathogens such as those listed in Appendix B of the *NIH Guidelines*
	Bloodborne Pathogens **(Occupational Safety and Health Administration, OSHA)**	Pathogens such as the **human immunodeficiency virus (HIV)**, **hepatitis B and C viruses (HBV and HCV)**.
	Select Agents (CDC)	Pathogens categorized by CDC as select agents because of their severe threat to humans (e.g., biological weapons)
Plant and Animal Pathogens		Materials, organisms, or agents regulated by USDA-APHIS that may harm domestic or native animals or plants, or natural resources.
Toxins		Bacterial, fungal, algal, and animal toxins.
Select Agents and Toxins		Human, animal, and plant pathogens and toxins categorized by CDC and **Animal and Plant Health Inspection Service (APHIS)** as select agents and toxins because of their potential severe threat to humans (e.g., biological weapons)
Prions		Misfolded proteins and materials potentially containing other misfolded proteins that cause diseases known as **transmissible spongiform encephalopathies (TSEs)**

3.3.2.1 Pathogen and Toxin Information and Guidance

Documentation of the hazardous characteristics and controls for well-known pathogens and toxins is usually readily available and should be considered in the risk assessment. Listed in this

section are agencies and organizations that provide such information, along with links to the information sources.

Because it may be difficult to find information on lesser-known pathogens or toxins, variants of pathogens, or opportunistic pathogens, their use may require additional risk assessments. For example, special technical information might be needed for avirulent or attenuated agents that have been physiologically modified or genetically altered and therefore several orders of magnitudes less likely to produce disease in a healthy host organism. In addition, "opportunistic pathogens" may not be listed as pathogens because they may only infect immunocompromised hosts.

- **BMBL Agent Summary Statements**
  Section III of BMBL provides summary statements for many agents associated with laboratory-acquired infections or increased public health concern. Risk assessments must consider any information from these agent summary statements that apply to specific LBNL work activities. Categories included in the agent summary statements are listed below:
    - bacterial agents
    - fungal agents
    - parasitic agents
    - rickettsial agents
    - viral agents
    - arboviruses and related zoonotic viruses
    - alphabetic listing of 597 arboviruses and hemorrhagic fever viruses
    - toxin agents
    - prion diseases

- **Canadian Material Safety Data Sheets for Infectious Substances**
  The Public Health Agency of Canada produces and provides material safety data sheets for infectious substances as a safety resource for Canadian laboratory workers who may be exposed to these agents in research, public health, teaching, and other laboratories.

- **CDC Health Information**
  The CDC A-Z Index provides information on topics with relevance to a broad cross-section of CDC audiences. The items are representative of popular topics and frequent inquiries, or have critical importance to CDC's public health mission. Topics such as diseases and vaccinations are covered.

- **CDC Travelers' Health**
  CDC Travelers' Health offers information to assist travelers and their health care providers in deciding the vaccines, medications, and other measures necessary to prevent illness and injury during international travel.

3.3.2.2 Human Pathogens

Human pathogens are infectious microbes (e.g., bacteria, protozoa, fungi, viruses, etc.) or other agents (e.g., prions) that cause disease in healthy humans. Pathogens are also often referred to as etiologic agents or infectious agents. **Etiologic** is an adjective that means disease-causing. The terms **infectious agent** and **infectious material** are also used in biosafety standards and in this manual. The term **infectious agent** means human pathogen. The term **infectious material** means a biological material that potentially contains human

pathogens or infectious agents. Listed and linked below are biosafety standards that cover human pathogens.

- **Human Etiologic Agents (NIH Guidelines)**
  The *NIH Guidelines* provide a list of human pathogens and their RG2, RG3, and RG4 designations in Appendix B (Classification of Human Etiologic Agents on the Basis of Hazard) of the *NIH Guidelines* (also see Appendix B of this manual). Work with human pathogens at LBNL will be conducted in accordance with the agent-specific RG designations in Appendix B of the *NIH Guidelines* and this manual.

- **BMBL Human Pathogens**
  BMBL agent summary statements contain BL-specific containment guidance for specific human pathogens (see Section 3.3.2.1). Work with human pathogens at LBNL will be conducted in accordance with the IBC. The IBC will determine the proper containment level for pathogenic work, and use the recommended BL guidance presented in BMBL agent summary statements when available and applicable to the work activity. See Section 4.4 of this manual for additional information on BLs.

- **DOE WSHP Biological Etiologic Agents**
  The DOE WSHP regulation (10 CFR 851, Appendix A, Section 7) has specific requirements for "biological etiologic agents." LBNL's program to comply with 10 CFR 851 defines a **biological etiologic agent** as an agent of biological origin (e.g., bacterium, fungus, parasite, virus, etc.) that causes disease in humans (i.e., pathogenic to humans). See Appendix B of this manual for the NIH list of human etiologic agents. See PUB-3000, Chapter 26, Appendix D, for specific LBNL requirements related to biological etiologic agents under 10 CFR 851.

- **OSHA Bloodborne Pathogens**
  See Section 3.3.3 and Appendix C of this manual for requirements related to human pathogens that are considered **bloodborne pathogens (BBPs)** under the OSHA Bloodborne Pathogens Standard.

- **CDC Select Agents**
  The **Health and Human Services (HHS)** CDC regulation on select agents and toxins lists agents that are both select agents and human pathogens. See Section 3.3.2.5 of this manual for more information.

3.3.2.3 Plant and Animal Pathogens

See Section 3.3.3 (USDA-Regulated Materials, Organisms, and Agents) for information on plant and animal pathogens and Section 3.3.2.5 for more information on plant and animal pathogens that are also select agents.

3.3.2.4 Biological Toxins

Biological toxin, **biotoxin,** or **toxin** is a poisonous substance produced by a living organism. The poisonous nature of toxins means that they may cause death or severe incapacitation at

relatively low exposure levels. Toxins include, for example, bacterial toxins, fungal toxins, algal toxins, and animal toxins. Examples include microcystins produced by freshwater cyanobacteria, or venoms produced by snakes or spiders. The word "toxin" without other descriptors such as "bio" is used in this manual and is a proper technical term to specifically describe toxins of biological origin. Toxic substances that are not of biological origin are properly termed "poisons."

Typical laboratory work with very small quantities of most toxins can be performed with minimal risk to the worker. Toxins do not replicate, are not infectious, and are difficult to transmit mechanically or manually from person to person. Other characteristics that further limit the spread of toxins include the fact that many commonly employed toxins are relatively unstable in the environment (especially in the case of protein toxins) and have very low volatility.

Toxins must be handled using the general and "particularly hazardous substance" sections of the LBNL ***Chemical Hygiene and Safety Plan*** **(CHSP)**. In addition, safety and security controls (presented below) based on a risk assessment must be used for each specific laboratory operation. The main laboratory risks are accidental exposure by direct contamination of the mouth, eyes, or other mucous membranes; inadvertent aerosol generation; and needlestick or other accidents that may compromise the normal barrier of the skin.

Requirements and guidelines for storage and work with toxins in the laboratory are covered and summarized below. See Section 3.3.2.5 for additional information on toxins listed in the National Select Agent Registry.

- **BMBL Guidelines for Work with Toxins**
  According to Appendix I of BMBL, toxins of biological origin must be reviewed and should be incorporated into work with toxins based on a risk assessment approved by the IBC. Key criteria in the guidelines and LBNL policies:
  - A risk assessment should be conducted to develop safe operating procedures and a specific chemical plan. It is LBNL policy that this toxin assessment and plan should be documented in the Biosafety Work Authorization and should cover applicable topics and guidelines presented in Appendix I of BMBL. General topics should include: description of work; safety and security risks, hazards, or concerns; and safety and security controls.
  - Each worker must be trained in the theory and practice of toxins, with emphasis on practical hazards associated with laboratory operations. This training includes how to handle transfers of toxins or liquids containing toxin, where to place waste solutions and contaminated materials or equipment, and how to decontaminate work areas after routine operations as well as after accidental spills.
  - An inventory control system should be in place to account for toxin use and disposition. At LBNL, original primary containers of toxin must have LBNL chemical barcodes and be entered into the LBNL Chemical Management System.
  - Access to work areas should be controlled.
  - Routine operations with dilute toxin solutions should be conducted under BL2 containment with the aid of personal protective equipment, laboratory hoods, biosafety cabinets, or comparable engineering controls.
  - Work with dry toxins should be minimized or eliminated.

- **BMBL Toxin Agent Summary Statements**

Section VIII-G of BMBL contains information and guidance on specific toxins. When applicable, this guidance must be reviewed and should be incorporated into the work in accordance with the IBC-approved risk assessment.

3.3.2.5 Select Agents and Toxins

Select agents and toxins are specific pathogenic agents and toxins regulated by the HHS-CDC and The USDA-APHIS due to their potential threat (e.g., as biological weapons) to human, animal, and plant health. Specific genetic elements, recombinant nucleic acids, and recombinant organisms that may pose a similar threat are also regulated. Appendix B, Section B.2, of this manual provides the list of select agents and toxins and additional toxin information.

Possession, use, storage, or transfer of select agents and toxins must be conducted in compliance with the HHS-CDC and USDA-APHIS regulations related to human, plant, and animal select agents and toxins. Specific controls for select agents are detailed in LBNL's *Biosafety, Security, and Incident Response Plan for Select Agents*, a controlled document. Controls for select agents have also been integrated into the overall biosafety program described in this manual.

See the **National Select Agent Registry (NSAR)** Program Web site for additional information on select agents provided by HHS-CDC and USDA-APHIS. The NSAR Program oversees possession of select agents and toxins for the HHS-CDC Division of Select Agents and Toxins and the USDA-APHIS Agricultural Select Agent Program.

3.3.2.6 Prions

A **prion** is an infectious agent composed of protein. All such agents discovered to date propagate by transmitting a misfolded protein; the protein does not itself self-replicate and the process is dependent on the presence of the polypeptide in the host organism. The misfolded form of the prion protein has been implicated in prion diseases known as transmissible spongiform encephalopathies (TSEs). TSEs are neurodegenerative diseases that affect humans and a variety of domestic and wild animal species. Examples are **Creutzfeldt-Jakob disease (CJD)** in humans and **bovine spongiform encephalopathy (BSE)**, also known as mad cow disease in cattle. All known prion diseases affect the structure of the brain or other neural tissue, are currently untreatable, and are always fatal.

Normal and diseased (misfolded) prions.
Source: ScienceBlogs, Basic Concepts: Prions, by Shelley Batts (February 11, 2007).

Prion diseases are transmissible by inoculation or ingestion of infected tissue or homogenates. Prion infections usually occur in brain or other central nervous system tissues, and to a lesser extent in lymphoid tissues including spleen, lymph nodes, gut, bone marrow, and blood.

Section VIII, Appendix H, of BMBL provides an agent summary statement that includes guidelines for prion diseases. When applicable, this guidance must be used to incorporate controls based on a risk assessment into the Biosafety Work Authorization.

3.3.3 USDA-Regulated Materials, Organisms, and Agents

The USDA-APHIS defends America's animal and plant resources from agricultural pests and diseases by regulating materials, organisms, or agents that may harm domestic or native animals or plants, or natural resources. These materials, organisms, or agents may cause harm directly (e.g., predator or pathogen) or indirectly (e.g., vector). General examples include specific animals, plants, genetically engineered organisms, animal pathogens, plant pathogens, soil that may contain such pathogens, and agents that pose a severe threat.

The transfer, storage, use, and disposal of APHIS-regulated materials at LBNL must be conducted in accordance with APHIS regulations. Generally, APHIS requires a permit or other document to import, export, or store regulated materials from or to locations outside the continental United States (U.S.) or between U.S. states. APHIS permits are issued to individuals and are not transferrable to others. The APHIS permit and sometimes an accompanying "compliance agreement" dictate specific controls and limitations when working with regulated materials. Individuals responsible for the transfer, storage, use, or disposal of such materials will obtain permits when required, ensure that the materials and permits are covered in the LBNL Biosafety Work Authorization, and ensure that specific requirements in the permit and compliance agreement are implemented.

Materials, organisms, and agents that threaten animal and plant health are regulated by branches of the USDA-APHIS and examples are listed below in Table 4. Additional agency requirements and Web links for more information are detailed in Appendix I, Section I.2.2, of this manual. See Section 3.3.2.5 above for more information on select agents and toxins.

Table 4
Materials Regulated by USDA-APHIS

APHIS Branch	Examples of USDA-APHIS-Regulated Materials, Organisms, and Agents
Plant Protection and Quarantine (PPQ)	Plant pests such as soil, plant pathogens, plants, plant products, weeds, insects, mollusks, and nematodes
Veterinary Services (VS)	Material, organisms, vectors, animal pathogens, animal products, cell cultures and their products, live animals, semen, embryos, and veterinary biologics (e.g., vaccines, antibodies, and diagnostic kits) that may harm animal health
Biotechnology Regulatory Services (BRS)	Certain genetically engineered organisms that may pose a plant pest risk, including organisms that are plants, insects, or microbes
Agricultural Select Agent Program	Animal and plant pathogens that are select agents

3.3.4 Bloodborne Pathogens and Human Materials

The federal OSHA Bloodborne Pathogens Standard has comprehensive requirements for workers who are or may be exposed to BBPs or designated materials assumed to contain BBPs. LBNL uses the term "**BBP materials**" to describe the pathogens and materials covered by the OSHA standard. These BBP materials are summarized in Table 5 and discussed in the next paragraph. BMBL guidelines for working with human and mammalian cells and tissues are also discussed below.

Table 5
Materials Covered by the OSHA Bloodborne Pathogens Standard*

- **Bloodborne pathogens** such as human immunodeficiency virus (HIV), hepatitis B virus (HBV), and hepatitis C virus (HCV)
- **Human blood:** includes blood, blood components, and products made from human blood
- **Other potentially infectious materials (OPIM)**:
  - **Unfixed human tissue or organ** (other than intact skin) from a living or dead human
  - **Primary human tissue cultures**. These cultures are explants of living human tissue placed in a medium for tissue culture.
  - **Primary human cell strains**.** These cell strains are propagated in vitro from primary explants of human tissue or body fluids that have a finite lifetime (i.e., nontransformed) in tissue culture for 20 to 70 passages.
  - **Established human cell lines**.** These cell lines are immortalized cells that have been transformed by spontaneous mutation or natural or laboratory infection with an immortalizing agent, and then propagated or passed many times (e.g., in vitro or in animals such as mice).
  - **Human body fluids**. Fluids that are assumed to be potentially infectious include semen, vaginal secretions, cerebrospinal fluid, synovial fluid, pleural fluid, pericardial fluid, peritoneal fluid, amniotic fluid, saliva in dental procedures, any body fluid that is visibly contaminated with blood, and all body fluids in situations where it is difficult or impossible to differentiate between body fluids. Some human secretions that do not contain visible blood are not considered OPIM (e.g., urine, feces, vomit, tears, sweat, sputum, nasal secretions, and saliva).
  - **HIV or HBV infected materials**. HIV-containing cell or tissue cultures, organ cultures, and HIV- or HBV-containing culture medium or other solutions; and blood, organs, or other tissues from humans or experimental animals infected with HIV or HBV

Table Footnotes:

* Text taken from OSHA Bloodborne Pathogen Standard 29 CFR 1910.1030 and the OSHA Standard Interpretation on Applicability of 1910.1030 to Establish Human Cell Lines.

** Most primary human cell strains and established human cell lines at LBNL (e.g., American Type Culture Collection cell lines) are OPIM as required by the OSHA Standard Interpretation on such cells. If the researcher does not want to consider the cells OPIM, the cells must be "characterized." Characterization must include documented screening of the cell lines or strains for viruses specified as BBPs in the OSHA standard, including human immunodeficiency viruses, hepatitis viruses, and herpes viruses (e.g., Epstein-Barr virus) if the cells are capable of propagating such viruses. Documentation that the cell line in culture is free of BBPs must be reviewed and approved by the Biosafety Officer and the Institutional Biosafety Committee.

BBPs are infectious agents capable of causing human disease, and are transmitted through human blood and tissues. Examples include HBV and HIV. According to the OSHA Bloodborne Pathogens Standard, materials that are regulated based on their potential to contain BBPs include human blood, human blood components, products made from human blood, and OPIM listed in Table 5. LBNL uses the term **BBP materials** to describe all of these materials covered by the OSHA standard. Dried blood and some human secretions (e.g., urine, feces, vomit, tears, sweat, sputum, nasal secretions, and saliva) that do not contain visible blood are not considered OPIM even though they may contain other types of infectious agents or present health concerns.

Blood Collection. Source: HHS CDC Office of Health and Safety, Biosafety in the Laboratory presentation (Web accessed May 2010)

Appendix H of BMBL states that a risk assessment should be conducted for human and primate cells based on the origin and source of cells or tissues, and such cells should be handled using BL2 practices and containment (see Section 4.4 for further discussion of BLs). While many requirements in the BMBL and OSHA Bloodborne Pathogen Standard are similar to each other, the OSHA standard additionally requires initial and annual BBP training, availability of hepatitis B vaccination at no cost to employees, and a written Exposure Control Plan (ECP). Researchers satisfy documentation requirements for a risk assessment, BL2 containment, and an ECP once they have an approved Biological Use Authorization (BUA). BL2 containment must be used unless the BUA risk assessment indicates that alternative controls are sufficient. BUAs are further discussed in Section 5.1 of this manual and PUB-3000.

LBNL work that involves BBP materials will be performed in compliance with the Fed/OSHA Bloodborne Pathogens Standard and BMBL. LBNL's program for compliance with these standards is integrated into the larger LBNL biosafety program that is described in this manual.

3.3.5 Recombinant Materials, Organisms, and Agents

This section defines basic biological terms and processes that are key to understanding recombinant risks and concerns. **Genetic material** plays a fundamental role in determining the structure and nature of cell substances. It exists in the nucleus, mitochondria, and cytoplasm of a cell or organism, and is capable of self-propagation and genetic variation. The genetic material of a cell can be a gene, a part of a gene, a group of genes, a **deoxyribonucleic acid (DNA)** molecule, a fragment of DNA, a group of DNA molecules, or the entire genome of an organism. A **nucleic acid** is a macromolecule composed of chains of monomeric nucleotides. In biochemistry, nucleic acids carry genetic information or form structures within cells. The most common nucleic acids are DNA and **ribonucleic acid (RNA)**. Nucleic acids are universal in living things, as they are found in all cells and viruses. The term **genetic recombination** is used to describe the process by which the strand of genetic material (usually DNA, but can also be RNA) is broken and then joined to a different DNA molecule to create **recombinant genetic material**. The *NIH Guidelines* defines **recombinant DNA molecules** as molecules constructed outside living cells by joining natural or synthetic nucleic acid segments to nucleic acid molecules that can replicate in a living cell or molecules that result from the replication of such molecules.

Vectors are commonly used in genetic engineering to create recombinant materials, organisms, agents, or cells. In molecular biology, a **vector** is a DNA molecule used as a vehicle to transfer foreign genetic material into another cell. Such a vector usually does not cause disease itself, but may change the properties and risks associated with the host cell. The four major types of vectors are plasmids, bacteriophages and other viruses, cosmids, and artificial chromosomes. Two common vectors are plasmids and viral vectors.

- **Plasmid vectors** are commonly used to multiply or express particular genes. Many plasmids are commercially available for such uses. Plasmids are DNA segments that are separate from chromosomal DNA and are capable of replicating independently of the chromosomal DNA. In many cases, a plasmid is circular and double-stranded. Plasmids usually occur naturally in bacteria, but are sometimes found in eukaryotic organisms. Plasmids are considered transferable genetic elements, capable of autonomous replication within a suitable host. Plasmid host-to-host transfer requires direct, mechanical transfer by "conjugation" or changes in host gene expression allowing the intentional uptake of the genetic element by "transformation." Plasmids provide a mechanism for horizontal gene transfer within a population of microbes and typically provide a selective advantage under a given environmental state. For example, plasmids may carry genes that provide resistance to naturally occurring antibiotics in a competitive environmental niche, or alternatively the proteins produced may act as toxins under similar circumstances. If these plasmids are inserted into a different host bacterium, the new host may acquire antibiotic resistance or produce toxic protein.
- **Viral vectors** are a viral tool commonly used to deliver genetic material into cells. This process can be performed inside a living organism (in vivo) or in cell culture (in vitro). Viruses have evolved specialized molecular mechanisms to efficiently transport their genomes inside the cells they infect. Delivery of genes by a virus is termed transduction, and the infected cells are described as transduced. Although viral vectors are occasionally created from pathogenic viruses, they are modified in such a way as to minimize the risk of handling them. This usually involves the deletion of a part of the viral genome critical for viral replication. Such a virus can efficiently infect cells, but once the infection has taken place, it requires a helper virus to produce new virions. Examples of recombinant viral vectors include:
    - retroviral vectors from retroviruses such as the Moloney murine leukemia virus,
    - lentiviral vectors from lentiviruses (a subclass of retroviruses) such as HIV,
    - adenoviral vectors from adenoviruses, and
    - the **adeno-associated virus (AAV)**.

Genetic engineering may also use or create a transgenic organism. A **transgenic organism** is an organism whose genome has been altered by the transfer of a gene or genes from another species or breed. Examples of transgenic organisms include vertebrates such as mice, plants, and microbes.

Work with or the creation of recombinant organisms or specific recombinant genomic materials and nucleic acids may create new risks to humans, animals, plants, or the environment. These potential recombinant risks must be identified and evaluated during the risk assessment process. Examples of genetic modifications that may increase risk include modifications that increase an agent’s pathogenicity or susceptibility to effective treatments (e.g., antibiotics), or increase an organism’s ability to compete in the natural environment.

Requirements and specific practices for constructing and handling recombinant DNA molecules, and organisms and viruses containing recombinant DNA molecules, are specified in the *NIH Guidelines*. APHIS permits may also be required for the importation, interstate movement, or environmental release of certain genetically engineered organisms that may be plant pests (see Appendix I of this manual). Recombinant research requires a risk assessment, establishment of containment levels and controls, and a Biosafety Work Authorization (for more information, see Sections 2.0 to 5.0 of this manual and PUB-3000, Section 26.8).

3.3.6 Animals

Working with animals in research, caring for animals in animal care facilities, or coming in contact with animals or vectors in the field may cause zoonotic or other diseases. A **zoonosis** or **zoonose** is an infectious disease that can be transmitted (in some instances, by a vector) from nonhuman animals, both wild and domestic, to humans, or from humans to nonhuman animals (the latter is sometimes called reverse zoonosis). Human diseases caused by a noninfectious, etiological agent derived from animals or their vectors are not considered a zoonosis (e.g., allergic reactions to animal products such as dander or urine). Work involving animals may expose workers to etiologic agents in a variety of ways such as wound infections, inhalation of aerosols (e.g., dust from animal bedding), and animal bites or scratches. See Table 6 for examples of zoonotic diseases and other diseases related to animals.

Worker safety, agricultural, and recombinant risks related to working with animals must be evaluated during the risk assessment, and proper containment measures must be employed. See the following sections and standards for additional information:

- Sections 3.3.3 and 3.3.5 of this manual discuss agricultural and recombinant risks, respectively;
- Section 4.4 of this manual provides an overview of laboratory and animal biosafety level containment categories and criteria; and
- Section VIII of BMBL provides agent summary statements for zoonotic agents. It also recommends containment levels for laboratory use of a zoonotic agent and containment levels for handling animals infected with an agent.

Table 6
Examples of Zoonotic and Other Diseases Related to Animals

Disease	Reservoir Vectors	Causative Agent	Exposure Routes		
			Inhalation	Ingestion	Skin Contact
allergies	vertebrate animals	animal allergens	dander, urine, or saliva in dust or bedding	—	—
anthrax	animals	*Bacillus anthracis*	contaminated dust with spores	contaminated with spores	contaminated materials with spores
hantavirus pulmonary syndrome	rodents/deer mice	sin nombre virus	contaminated dust from dried urine, saliva, droppings	—	—
herpes B virus infection	nonhuman primates, particularly endemic in rhesus and cynomolgus members of the macaque genus	*Herpesvirus simiae* or B virus	aerosolized macaque saliva	mucosal splashes (e.g., monkey fluids contact the worker's eyes or mouth)	monkey bites, monkey scratches, or cage scratches; direct contamination of a preexisting wound with macaque saliva; needle-stick injuries following needle use in macaques
lyme disease	rodents/deer	*Borrelia burgdorferi*	—	—	ixodid tick bite
plague	rodents/fleas	*Yersinia pestis*	—	—	flea (*Xenopsylla cheopis, Pulex irritans*) bite
Q fever	sheep, goats, cattle	*Coxiella buretii*	barnyard dust contaminated by birth material and excreta	milk ingestion, regurgitation, and perspiration	—
rabies	rabid animals	rabies virus	—	—	bites and saliva from an infected animal
Rocky Mountain spotted fever	ticks	*Rickettsia rickettsii*	—	—	tick bites or skin contact with contaminated materials

Disease	Reservoir Vectors	Causative Agent	Exposure Routes		
			Inhalation	Ingestion	Skin Contact
tetanus	animals	*Clostridium tetani*	—	—	wounds contaminated with dirt or objects containing animal or human feces or saliva
various diseases such as skin infections or gastro-enteritis	fish aquarium water	*Mycobacterium marinum, M. fortuitum*, *Aeromonas hydrophila*, other bacteria, and *Cryptosporidium* spp. protozoa	—	—	skin contact with aquarium water, especially if skin has cuts or abrasions

3.4 Laboratory Procedure Hazards

The BMBL five-step approach to assessing biological risk and selecting controls for laboratory work was initially presented in Section 3.2 of this manual. Step 2 (identifying laboratory procedure hazards) of this approach is discussed in this section.

Historical data on **laboratory acquired infections (LAIs)** are an indicator of laboratory procedure hazards that have resulted in disease. Historical data show that past LAIs have occurred from:

- parenteral inoculation by a contaminated sharp or syringe needle,
- spills or splashes of contaminated materials directly onto the skin and mucous membranes,
- ingestion through mouth pipetting,
- animal bites and scratches, and
- inhalation of infectious aerosol.

See Section II of BMBL for more information regarding LAIs. Prevention of LAIs depends on the conscientious and proficient use of standard microbiological practices and special practices (see Section 4.1 of this manual) and the correct use of laboratory equipment. Table 7 below lists examples of hazards that may be found in laboratories using biological materials.

Table 7
Equipment Hazard Examples

Equipment Type	Hazards	Examples
aerosol generating	The diameter of aerosols generated from certain types of equipment will vary from 0.1 to 100 microns. • Bacterial cells and spores are 0.3 to 10 microns in diameter. • Viruses are 0.02 to 0.3 micron in diameter. • Biological particles generated from liquid or powder form particles that are 0.5 micron diameter.	• blender: 2 micron diameter particles • sonicator: 4.8 micron diameter particles • dropping bacterial flask: 3.5 micron diameter particles • dropping lyophilized culture: 10 micron diameter particles • pipette blow out: 4.9 micron diameter particles • vortex culture: 4.8 micron diameter particles • centrifuge: 4 micron diameter particles
cryogenic temperatures	Cryogenic temperatures of –80°C are used to remove moisture from materials and contain low-temperature refrigerants. If protective equipment is not used, exposure to low temperature may cause cryogenic burns and frostbite.	• freezers • lyophilizers (freeze dryers) • use of dry ice in shipping and receiving
high temperatures	The use of heat to decontaminate or sterilize materials is widely used in the biological research laboratory. Physical injury from burns may occur from sudden accidental releases of heat sources or from the handling of hot items.	• dry heat temperatures used for sterilization range from 80°C to 200°C • wet heat is utilized by autoclaves to sterilize materials and can range between 80°C to 500°C • saturated steam operates at 121°C
high pressure	Compressed gas cylinders and pressurized equipment are commonly used in the laboratory. Injury may occur from rupture high-pressure lines.	• autoclaves operate at high pressures of 1,000 kilo Pascal (145 psig)
oxygen deficiencies	Low-temperature freezers may include a backup system involving the use of a cryogenic liquid. Backup systems may consist of 50–200 liters of liquid nitrogen or liquid carbon dioxide under pressure. Liquid helium is also used in nuclear magnetic resonance (NMR) laboratories.	Oxygen deficiency environment may result from: • the displacement of oxygen by expanding gases (i.e., 700 parts of air to 1 part liquid nitrogen), • the linear displacement of oxygen from carbon dioxide (gas) generated from the use of dry ice, and • compressed gas cylinders or tanks.
rotational energies	Sudden release of such rotational energies can cause serious physical injury from unbalanced equipment or flying shrapnel.	Tabletop and floor-mounted low, high, and ultracentrifuges rotate at speeds ranging from less than 5,000 to more than 100,000 rpm with rotor masses up to several kilograms.

Equipment Type	Hazards	Examples
sharps	Any device having corners, edges, or projections capable of cutting or piercing the skin. LBNL's definition of sharps includes regulated sharps (medical waste), unregulated biohazardous sharps, and unregulated uncontaminated sharps that pose a safety hazard to custodians and other personnel.	• needles with or without syringes • needles with vacutainers • needles with attached tubing • blades (razors, scalpels, X-ACTO knives) • broken glass • glassware with sharp edges or points • pasteur pipettes and glass slides
ultraviolet (UV) C radiation	UVC radiation is used for inactivating microorganisms. Its usefulness, however, is limited by a variety of factors (e.g., low penetrating power). The eyes and skin can be damaged by exposure to direct or strongly reflected UV radiation.	UV lights must be evaluated to determine if the benefits outweigh the potential hazards. UV radiation is sometimes used in conjunction with: • unoccupied tissue culture rooms • biological safety cabinets • UV light boxes

3.5 Worker Competence and Health

The BMBL five-step approach to assessing biological risk and selecting controls for laboratory work was initially presented in Section 3.2 of this manual. Step 4 of this approach (i.e., the evaluation of a worker's proficiencies or competence) and the evaluation of a worker's health are discussed in this section. Step 4 is an ongoing process where the supervisor or work lead evaluates a worker's training, instructions, qualifications, behavior, and health. Worker training and health requirements are also a component of the Biosafety Work Authorization.

Workers are the first line of defense for protecting themselves, others in the laboratory, and the public from exposure to biohazardous agents. Laboratory staff must therefore be properly trained, instructed, and qualified before conducting work. Supervisors and work leads should train and evaluate staff to the point where knowledge of the agent and procedure hazards, aseptic techniques, safety practices, use of safety equipment, caution, and attentiveness become second nature. Knowledge and experience prior to job assignment may also be necessary qualifications. See Section 5.2 for more information on training, instruction, and qualification.

In addition, a worker's health status may affect his or her susceptibility to an infection or ability to receive immunizations or prophylactic intervention. Workers who know they have an illness or medical condition that affects their immune system or their ability to receive vaccines or medications should seek an evaluation by Health Services in Building 26. See Section 5.4 for additional information regarding worker health and immunization.

4.0 Biosafety Principles and Levels

To determine which controls are required to mitigate hazards and perform work safely, supervisors and work leads must understand and apply the processes and requirements for defining work, identifying hazards, and assessing risks, as discussed in Section 3.0 of this manual. Controls are safeguards employed to contain biological agents or materials and therefore prevent the exposure of workers, other people, or the environment to agents that may harm them.

In biosafety, the term "**containment"** describes the set of controls, including safe methods, equipment, and facilities needed to protect workers and the environment from biohazardous materials or agents. Controls used for containment in laboratories are described in *Biosafety in Microbiological and Biomedical Laboratories* (BMBL), Section III, as the "Principles of Biosafety." These containment controls are listed below and summarized in the next sections:

- laboratory practices and techniques,
- safety and personal protective equipment, and
- facility design and construction.

The LBNL Biosafety Work Authorization is used to define work, identify hazards, assess risks, and implement any of the containment controls listed above. See Sections 2.0 and 5.1 of this manual and PUB-3000, Section 26.8, for additional information on work authorization documents.

4.1 Laboratory Practices

The first and most important element of control for laboratory containment and research product protection is strict adherence to laboratory biosafety containment practices and **good microbiological practice (GMP)**. Biosafety containment practices include standard microbiological practices and special practices specified by the Centers for Disease Control and Prevention (CDC) and the National Institutes of Health (NIH). GMP is based on widely accepted aseptic practices.

Standard microbiological practices and special practices are administrative controls listed as biosafety level (BL) containment criteria in BMBL and the *NIH Guidelines* to protect workers and the environment. (See Section 4.4 of this manual for additional information on BL containment categories and criteria.) These practices, along with requirements from other biosafety standards, are used for the safe performance of work documented in the LBNL Biosafety Work Authorization. Standard microbiological practices or special practices for laboratories apply to most LBNL work with biological materials. Standard practices for BL1 and BL2 laboratories address the following topics (see Appendix C and Section 5.0 for more information):

- access control
- hand hygiene
- food and eating
- pipetting
- sharps control
- spill, splash, and aerosol control
- decontamination of work surfaces, equipment, materials, and spills
- signage and hazard communication
- pest management
- worker training and proficiency
- occupational health, immunization, and personal health
- incident reporting, evaluation, and worker treatment
- biosafety manuals or documents

Good Microbiological Practice (GMP) is also typically needed for containment and good research. GMP is based on aseptic techniques and other good microbiological practices

necessary to prevent contamination of the laboratory with the agents being handled and contamination of the work with agents from the environment. See Appendix D for common GMP. Supervisors and work leads are responsible for selecting and instructing workers on the specific GMP needed to conduct the work, or additional safety practices needed for specific agents or procedures.

4.2 Safety and Personal Protective Equipment

Worker exposure to infectious agents may be prevented by the use of standard and activity-specific safety and **personal protective equipment (PPE)** as primary barriers or controls. The need for additional activity-specific safety equipment or PPE must be determined during risk assessment, and any equipment needed for safety should be included in the Biosafety Work Authorization.

Standard safety equipment and PPE are equipment controls listed as BL containment criteria in BMBL and the *NIH Guidelines.* They provide primary barriers that prevent worker exposure to infectious agents. See Section 4.4 of this manual for additional information on BL containment categories and criteria. These standard equipment requirements, along with requirements from other biosafety standards, are used and customized for the work to be conducted. They are also summarized in the LBNL Biosafety Work Authorization. Standard safety equipment and PPE are applicable to most work with biological materials at LBNL. The following types of standard equipment and PPE are further discussed in Appendix C and Section 5.0 of this manual:

- biosafety cabinets
- PPE
- other physical containment devices such as centrifuge safety cups

4.3 Facility Design and Construction

Facility design and equipment provide secondary barriers that protect laboratory workers, persons outside the laboratory, the public, and the environment from potentially hazardous materials or agents that may be accidentally released from the laboratory.

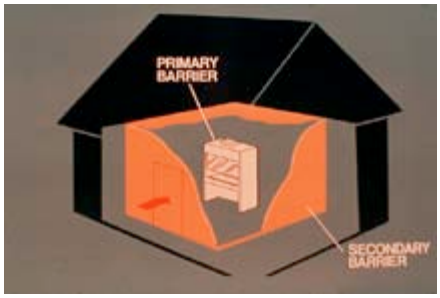

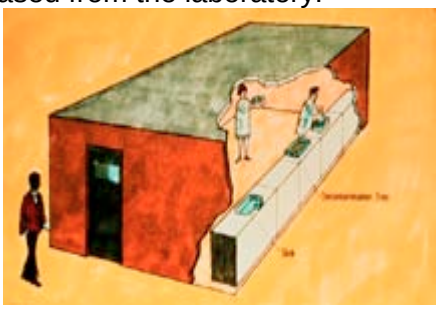

Standard facilites provide secondary barriers.
Source: HHS CDC Office of Health and Safety.

LBNL designs and operates its facilities where work with biological materials is conducted in accordance with applicable standard facilities criteria. **Standard facilities** are design features, materials, and equipment incorporated into the laboratory or facility in accordance with BL containment criteria stated in BMBL and the *NIH Guidelines* (see Section 4.4 for more information).

Standard BL1 and BL2 laboratory facility barriers are sufficient to control most work at LBNL. This is because risks related to most work are associated with direct contact with materials or agents in standard laboratories. Examples of standard facility barriers and equipment are listed below. See Appendix C for standard laboratory facilities criteria that summarize how these barriers must be employed. See Section 5.0 for additional information on each of these topics.

- doors
- sinks
- cleanable surfaces and furnishings
- window screens
- ventilation and biosafety cabinets
- vacuum line filters and traps
- eyewashes
- autoclaves

If the risk assessment indicates that there is a risk of exposure to an infectious aerosol, then higher levels of safety equipment and PPE (primary barriers) or multiple secondary facilities barriers are necessary. Multiple secondary facilities barriers are not typically needed at LBNL.

Some standard facility barriers are summarized in the Biosafety Work Authorization. Any additional special facility barriers that are required should also be included in the authorization.

4.4 Biosafety Containment Levels and Criteria

LBNL requires researchers who work with biological materials to implement containment controls in accordance with an established biosafety level (BL). BL is a standard combination of practices and techniques, safety equipment, and facilities to safely contain biohazardous materials or agents to be used in the work, as specified by BMBL or the *NIH Guidelines*.

Work at LBNL requires routine application of BLs developed for biological laboratories, and occasional application of BLs developed for other types of work such as large-scale recombinant operations. BLs for laboratories are presented in the next section. BLs for large-scale, plant, and animal uses are presented in Section 4.4.2 this manual.

The appropriate BL must be selected once the risk assessment has been completed. The final BL determination should consider all aspects of the work, hazards, and controls. The **principal investigator (PI)** or supervisor should propose the appropriate BL(s) when submitting the authorization for review. The final BL(s) are determined by the Institutional Biosafety Committee (IBC).

4.4.1 Laboratory Containment Levels

Containment controls for laboratory biosafety are categorized into four BLs. Definitions of each **laboratory biosafety level (BL)** are provided in Table 8. Work at LBNL is commonly conducted at BL1 or BL2, while work at BL3 or BL4 is not currently conducted. Laboratory work at LBNL must be conducted in accordance with the standard and special work practices, safety equipment, and facility requirements noted in the laboratory BL1 and BL2 criteria listed in Appendix C.

Table 8
Laboratory Biosafety Containment Levels

Present at LBNL	Biosafety Level (BL)	Biosafety Level Definition
yes	**1**	BL1 is suitable for work involving agents of unknown or minimal potential hazard to laboratory personnel and the environment,[1] or work with defined and characterized strains of viable microorganisms not known to consistently cause disease in healthy adult humans.[2]
	2	BL2 is suitable for laboratory work involving agents of moderate potential hazard to personnel and the environment.[1] Primary hazards to personnel working with these agents relate to accidental percutaneous or mucous membrane exposures, or ingestion of infectious materials.[2]
no	**3**	BL3 is applicable to facilities in which work is conducted with indigenous or exotic agents that may cause serious or potentially lethal disease as a result of exposure by the inhalation route.[3]
	4	BL4 is required for work with dangerous and exotic agents that pose a high individual risk of life-threatening disease, aerosol transmission, or related agents having an unknown transmission risk.[3]

Footnotes:
1 *NIH Guidelines*
2 BMBL, fifth edition, Section III
3 BMBL, fifth edition, Section IV

When developing the Biosafety Work Authorization, the appropriate laboratory BL must be selected after conducting the risk assessment. Typical BLs used for various materials and agents are listed in Sections 4.4.1.1 and 4.4.1.2 of this manual. The final BL(s) are determined by the IBC.

4.4.1.1 Laboratory Biosafety Level 1

BL1 laboratories are not necessarily separated from the general traffic patterns in the building. Work is typically conducted on open benchtops using standard microbiological practices. Special containment equipment or facility design is not required, but may be used as determined by a risk assessment. Laboratory personnel must have specific training in the procedures conducted in the laboratory and must be supervised by a scientist trained in microbiology or a related science.

Laboratory Biosafety Level 1 work with open benchtops and standard microbiological practices. Source: LBNL EH&S.

The BL will be determined as part of the risk assessment. BL1 containment is typically required for laboratory work involving:

- biological agents that meet the definition of Risk Group (RG) 1 (i.e., agents not associated with disease in healthy adult humans);
- biological materials not suspected of containing RG2 or higher agents in a quantity or form that may cause human disease (e.g., many soils and nonprimate animal cells);
- biological agents or materials not characterized by the supplier as RG2 or higher;
- transgenic or wild-type laboratory animals that have size or growth requirements allowing the use of containment for laboratory animals (e.g., rodents) and are
  - free of zoonotic diseases, and
  - not infected with, implanted with, or containing RG2 or higher agents or materials;
- laboratory growth of nongreenhouse transgenic plants (see Section 4.4.3 of this manual);
- biological agents, materials, or animals not typically categorized as RG2 or BL2 (or higher) as detailed Section 4.4.1.2 of this manual.

4.4.1.2 Laboratory Biosafety Level 2

BL2 laboratories follow BL1 requirements and additional BL2 requirements such as:

- Laboratory personnel have specific training in handling any pathogenic agents and are supervised by scientists competent in handling infectious agents and associated procedures.
- Access to the laboratory is restricted when work is being conducted.
- All procedures in which infectious aerosols or splashes may be created are conducted in **biological safety cabinets (BSCs)** or other physical containment equipment.

The BL will be determined as part of the risk assessment. Laboratory BL2 containment is typically required for laboratory work involving:

- biological agents categorized as RG2 in the *NIH Guidelines* or by the supplier;
- uses of biological agents described as BL2 in BMBL agent summary statements or other BMBL;
- biological materials that may contain RG2 agents (e.g., sewage);

- Bloodborne pathogen (BBP) materials (e.g., human blood, human tissues, or human cells);
- nonhuman primate tissues or cells;
- viral vectors that are replication defective but still infectious to human cells;
- laboratory animals (e.g., rodents) infected with, implanted with, or containing RG2 agents or materials (e.g., infected with a human pathogen or containing a xenotransplant of human cells); and
- tissues or cells potentially containing an RG2 agent (e.g., cells transformed with a RG2 virus).

4.4.2 Additional Containment Categories

Additional types of containment specified in the *NIH Guidelines* or BMBL may also be applicable to work with biological materials at LBNL. Table 9 below lists these additional containment categories and relevant *NIH Guidelines* or BMBL section. When selecting a containment level for a type of work listed in Table 9, the supervisor, work lead, and IBC should carefully review this table to determine if the containment category and criteria apply to the planned LBNL work.

Laboratory- or operation-specific authorizations, biosafety manuals, or other documents may be used to document the containment requirements related to the work. If the containment categories or criteria presented in Table 9 are not applicable to the work, the laboratory BLs presented in Section 4.4.1 of this manual are applied.

4.4.2.1 Recombinant Large-Scale Containment Levels

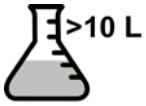

Physical containment guidelines from Appendix K of the *NIH Guidelines* must be used for large-scale research or production activities involving viable organisms containing recombinant DNA molecules. **Large scale (BL–Large Scale)** is a term used in the *NIH Guidelines* and the LBNL biosafety policy to describe uses of and containment levels for organisms containing recombinant DNA molecules involving a quantity of culture greater than 10 liters. Note that this quantity category typically means the quantity of a material in a single batch of liquid culture; however, this batch quantity is not defined by NIH and should be used as a guideline to determine the applicability of large-scale containment criteria. Criteria for large-scale containment address the biological hazard associated with organisms containing recombinant DNA only. Large-scale containment criteria must be selected based on the findings of the risk assessment, and then documented in the Biosafety Work Authorization.

4.4.2.2 Recombinant Plant Containment Levels

Biosafety containment levels and criteria for recombinant research with plants must be selected based on the findings of the risk assessment, and then documented in the Biosafety Work Authorization. Laboratory or plant biosafety containment levels must be applied to the work as follows:

- Laboratory BLs and criteria discussed in Section 4.4.1 of this manual and Appendix G of the *NIH Guidelines* should be used when the research plants are of a size, number, or have growth requirements that allow good containment when using laboratory BLs.
- **Plant BLs (BL-P)** must be used when the research plants are of a size, number, or have growth requirements that preclude the use of laboratory BLs. For plant BLs and criteria, see Appendix P (Physical and Biological Containment for Recombinant DNA Research Involving Plants) of the *NIH Guidelines.*

Table 9
Additional Containment Categories

Containment Category	Standard and Section	Focused Scope of Containment Criteria
large-scale uses of organisms containing recombinant DNA molecules	*NIH Guidelines*, Appendix K	Physical containment guidelines for large-scale (greater than 10 liters of culture) research or production activities involving viable organisms containing recombinant DNA molecules
recombinant DNA research involving **plants**	*NIH Guidelines*, Appendix P	Physical and biological containment conditions and practices suitable to greenhouse operations that conduct experiments involving plants, plant-associated microorganisms, and small animals (e.g., arthropods or nematodes)
recombinant DNA research involving **animals**	*NIH Guidelines*, Appendix Q	Containment and confinement practices for research involving whole animals when the animals are of a size or have growth requirements that preclude the use of containment for laboratory animals (i.e., including but not limited to nonhuman primates, cattle, swine, sheep, goats, horses, and poultry) and: • The animals' genomes have been altered by the introduction of recombinant DNA or DNA derived therefrom into the germ line (transgenic animals), or • Experiments involving viable recombinant DNA-modified microorganisms have been tested on whole animals.
vertebrate animal BL criteria for indoor research facilities (e.g., vivariums)	BMBL, Section V	Use of experimentally infected animals housed in indoor research facilities (e.g., vivariums), and the maintenance of laboratory animals that may naturally harbor zoonotic infectious agents
arthropod containment guidelines	BMBL, Appendix E	Risk assessment and containment for arthropods of public health importance including those that transmit pathogens. Arthropods that only bite, sting, or cause myiasis and infestation are not included. Myiasis is an infestation of tissue by fly larvae, or a disease resulting from such infestation.

The plant BLs listed in Appendix P of the *NIH Guidelines* specify physical and biological containment conditions and practices suitable for conducting greenhouse experiments involving recombinant DNA-containing plants, plant-associated microorganisms, and small animals. Acronyms for plant BLs are BL1-P through BL4-P. The following bullets further clarify terms and applicability of the plant biosafety levels:

- The term **greenhouse** refers to a structure with walls, a roof, and a floor designed and used principally for growing plants in a controlled and protected environment. The walls and roof are usually constructed of transparent or translucent material to allow the passage of sunlight for plant growth. The term **greenhouse facility** includes the actual greenhouse rooms or compartments for growing plants, including all immediately contiguous hallways and head-house areas, and is considered part of the confinement area.
- The plants covered in Appendix P of the *NIH Guidelines* include but are not limited to mosses, liverworts, macroscopic algae, and vascular plants including terrestrial crops, forest, and ornamental species.
- Plant-associated microorganisms include viroids, virusoids, viruses, bacteria, fungi, protozoans, certain small algae, and microorganisms that have a benign or beneficial association with plants, such as certain *Rhizobium* species and microorganisms known to cause plant diseases. Microorganisms being modified to foster an association with plants are also included.
- Plant-associated small animals include those arthropods that have an obligate association with plants, are plant pests or plant pollinators, or transmit plant disease agents. They also include other small animals such as nematodes that require the use of plants to test their biological properties. Microorganisms associated with such small animals (e.g., pathogens or symbionts) are also included.

A Practical Guide to Containment developed by Virginia Polytechnic and State University is a good example of how to apply plant BLs in research with greenhouse transgenic plants and microbes.

4.4.2.3 Vertebrate Animal Containment Levels

Biosafety containment levels and criteria for the use or care of vertebrate animals must be selected or developed following the risk assessment and covered in the Biosafety Work Authorization. Laboratory or animal biosafety containment levels must be applied to the work as follows:

- Laboratory biosafety level criteria should be used for laboratory animals such as rodents whose size or growth requirements allow the use of laboratory containment levels specified by the *NIH Guidelines*. Laboratory BLs and criteria are discussed in Section 4.4.1 of this manual.

- Animal biosafety levels must be applied when 1) recombinant research involves larger animals (e.g., nonhuman primates), 2) animals are infected with human pathogens, or 3) animals may harbor zoonotic agents (see Table 9 for more information). Acronyms for **animal biosafety levels** are **BL1-N** through **BL4-N**. In some cases, animal use, animal care, and hazards at LBNL may not be directly applicable to these established animal biosafety levels and criteria. In these cases, specific criteria that may be applicable may be selected, customized, and incorporated into the Biosafety Work Authorization.

Agent summary statements for zoonotic agents in Section VIII of BMBL also recommend containment levels for laboratory use of zoonotic agents, and for handling animals infected with the agent.

4.4.2.4 Arthropod Containment Levels

Biosafety containment levels and criteria for the use of arthropods must be selected or developed after the risk assessment. Laboratory or arthropod biosafety containment levels must be applied to the work as follows:

- Laboratory biosafety level criteria should be used for arthropods that do not present risks to humans, plants, or animals (e.g., most research uses of *Drosophila* spp.).
- Arthropod containment guidelines discussed in Appendix E of BMBL must be used for arthropods of public health importance including those that transmit pathogens. Arthropods that only bite, sting, or cause myiasis and infestation are not included. Most uses of *Drosophila* spp. are also excluded from these arthropod containment guidelines. The Appendix E of BMBL references the *Arthropod Containment Guidelines* published by the American Society of Tropical Medicine and Hygiene.

5.0 Specific Biosafety Controls

This section further describes biosafety controls, including safe methods, equipment, and facilities that were generally introduced in Section 4.0 of this manual.

5.1 Work Authorizations

LBNL Job Hazards Analyses (JHAs), Subcontractor Job Hazards Analysis and Work Authorizations (SJHAWAs), and Biosafety Work Authorizations document the definition of work, identification of hazards, risk assessments, and controls. Biosafety Work Authorizations include:

- Biological Use Authorizations (BUAs),
- Biological Use Registrations (BURs),
- Biological Use Notifications (BUNs), and
- Exposure Control Plans (ECPs).

PIs, work leads, workers, Division Safety Coordinators, and Environment, Health, and Safety (EH&S) Division Biosafety Program personnel have access to their BUAs, BURs, and BUNs through the Biosafety Authorization System (BAS) so that controls may be implemented and authorizations updated. Documentation, review, and authorization of new work should be initiated by filling out the Biological Use Application Form. See Section 2.0 of this manual and PUB-3000, Section 26.8, for additional information on these work authorizations.

These work authorizations consolidate and document a wide variety of biosafety requirements and controls to meet various biosafety standards (see standards in PUB-3000, Sections 26.4 and 26.10). For example the BUA is also regarded as:

- the registration document that must be submitted to the LBNL Institutional Biosafety Committee (IBC) as required by the *NIH Guidelines* for recombinant work (BURs also document such recombinant work),
- the laboratory-specific biosafety manual required by *Biosafety in Microbiological and Biomedical Laboratories* (BMBL) when Biosafety Level (BL) 2 work is performed with Risk Group (RG) 2 agents or materials, and
- the ECP required by the Occupational Safety and Health Administration (OSHA) Bloodborne Pathogens (BBP) Standard when BBP agents or materials are used.

5.2 Training, Instruction, and Qualification

This section describes the requirements and administrative systems for institutional and operation-specific training, information, and instruction based on the biosafety-related standards and LBNL policies summarized in PUB-3000, Section 26.7.8.1.

Work leads, supervisors, and principal investigators are responsible for ensuring their workers have sufficient skills, knowledge, and ability to perform their work safely. This includes understanding of the work, hazards, and controls through technical competence, training, instruction, and a commitment to safety in Integrated Safety Management (ISM) terms. Each worker's competence must be commensurate with his or her responsibilities. This competence is a major component of biosafety containment and includes both required LBNL courses and sufficient operation-specific information and instruction. These courses, information, and instruction provide workers with awareness of the potential hazards, required training, and proficiency in the practices and techniques required for handling biological materials safely and in accordance with laboratory standard microbiological practices and special practices discussed in Section 4.1.

Work leads must provide or arrange for appropriate training and instruction for each person, including but not limited to the:

- completion of required LBNL courses specified on all work authorization documents, and
- job- and operation-specific instruction and information.

5.2.1 Job Hazards Analysis

Supervisors, work leads, and staff must use the JHA or **Subcontractor Job Hazards Analysis (SJHA)** to define work with biological materials, determine the potential for exposure to biological hazards, and establish biosafety controls for each worker or subcontractor (for more information, see PUB-3000, Chapter 32 and Chapter 31, respectively). The Laboratory-wide JHA identifies workers who work with or have potential exposure to biological materials (e.g., BBP materials). The JHA process is based on each individual's work and activities. It also lists general controls including any required EH&S courses and Biosafety Work Authorizations for work or activities in which the worker participates.

5.2.2 Training Courses and Tracking

Specific biosafety, biohazardous waste, and occupational health courses are developed and maintained by the EH&S Division to meet requirements that can be fulfilled at an institutional level. LBNL course requirements are presented below and summarized in Table 10. See the EH&S Training Web site for additional course information, to register for a course, or to take an online course.

- Anyone who works with biological material of any risk level (e.g., microorganisms, cells, cell lines, tissue cultures, recombinant nucleic acids, blood, body fluids or tissues, or animals) must complete EHS0739 (General Biosafety Training) online or in a classroom. In addition, the online course EHS0730 (Medical/Biohazardous Waste Training) is recommended for anyone who works with biological material, and required for anyone who works with medical or biohazardous waste.
- Anyone who works with or may be exposed to human blood or blood products or to human materials (e.g., cells, tissues, or fluids) defined by the OSHA Bloodborne

Pathogens Standard as other potentially infectious materials (OPIM) (see Section 3.3.4 of this manual for more information) must also complete EHS0735 (Bloodborne Pathogen Training) and EHS0745 (Hepatitis B Medical Surveillance). EHS0735 must be renewed annually through EHS0738. Courses EHS0739 and EHS0738 are also available as Web-based challenge exams.

Table 10
Biosafety-Related Training Courses

Work or Exposure	**EHS0739** General Biosafety Training	**EHS0730** Medical/ Biohazardous Waste	**EHS0735** Bloodborne Pathogen Training (Initial)	**EHS0738** Bloodborne Pathogen Retraining (Annual)	**EHS0745** Hepatitis B Medical Surveillance
Use of biological materials of any risk level, or generation of medical/biohazardous waste	X	X			
Use or exposure to bloodborne pathogen materials	X	X	X	X	X

Biosafety training course requirements for each worker are identified through each worker's JHA, and inclusion in the Personnel and Training sections of the Biosafety Work Authorization in the BAS. Each worker's course requirements and training status are then displayed in the worker's Training Profile, JHA Profile, and the Biosafety Work Authorization.

5.2.3 Job-Specific Instruction, Information, and Practices

As discussed above in Section 5.2, supervisors and work leads are responsible for ensuring that workers receive job- and operation-specific instructions. These instructions should include:

- Individual JHA job duties and controls
- Hazards and controls in authorization documents including BUAs, BURs, BUNs, and ECPs. Controls in these documents include, for example, standard microbiological practices and special practices customized as needed for the work (see Appendix C of this manual). These authorizations must be available and accessible to each worker so that they can understand the work, hazards, and required controls. Each worker has access to their authorization, registration, and notification through the BAS.
- Good microbiological practices as needed to perform the work safely (see Section 4.1 and Appendix D of this manual)
- Incident, accident, and emergency response procedures (e.g., LBNL *Emergency Response Guide*)
- Any operation-specific safety procedure

Additional instruction or demonstration of proficiency may be needed for work that involves higher hazards. For example, workers must demonstrate their proficiency in standard microbiological practices and special practices before working with RG2 agents (for more information, see Section 4.1 of this manual).

Labels and signs must also be used to advise workers of hazards and controls (see Section 5.5 of this manual).

5.3 Occupational Health and Immunization

LBNL occupational health and immunization policies, programs, and services are provided by the Health Services Group of the EH&S Division under the direction of the Site Occupational Medical Director. These policies, programs, and services are described in the Health Services Web site, policies (e.g., immunization and serum banking), and Chapter 3 of PUB-3000. The occupational health program related to biosafety is designed to proactively identify and prepare workers who may be exposed to certain biological materials or agents, and provide procedures for the treatment and management of workers who have been injured or may have been exposed. Employees who are aware of personal illnesses that may affect their ability to combat infection or receive medications or vaccines should visit Health Services for an evaluation of how this may affect their individual risk for work with biological agents.

Potential exposures to biological agents or materials that generate health concerns or may cause disease are assessed as part of the work review and authorization process discussed above in Sections 3.0 and 5.1. This assessment includes an evaluation and determination of the need for employee medical evaluations, immunizations, serum banking, or other occupational health controls. For research projects, this assessment is conducted by IBC members including the Biosafety Officer and the SOMD. The IBC review includes SOMD recommendations and is the basis of required or recommended occupational health controls for potentially exposed employees. These controls are then documented in the Biosafety Work Authorization.

Employee consultation with LBNL Health Services. Source: LBNL EH&S.

Requirements or recommendations for occupational health controls (e.g., vaccinations) for specific agents or materials are discussed in BMBL, Section VIII (Agent Summary Statements). Requirements for BBP materials are provided by the OSHA Bloodborne Pathogens Standard. OSHA requirements and LBNL programmatic policies and systems for implementing these requirements are summarized below:

- Hepatitis B Vaccination: The OSHA Bloodborne Pathogens Standard requires that the hepatitis B vaccination series must be made available and offered to all LBNL employees who have occupational exposure to BBPs or materials that are regulated based on their potential to contain BBPs (e.g., human blood, tissues, and cells). This

requirement is managed at LBNL by ensuring that workers who are potentially exposed to BBP materials are identified in their BUA or ECP and are required to complete EHS0745 (Hepatitis B Medical Surveillance). Workers fulfill hepatitis B surveillance requirements by 1) completing the online EHS0745 course and 2) indicating on the integral surveillance form that they wish to be vaccinated or wish to decline the vaccination.

- Post-Exposure Evaluation and Follow-up: The OSHA Bloodborne Pathogens Standard requires that postexposure evaluations and follow-ups must be made available to all employees who have had an exposure incident. Employees who have had an exposure incident must report their exposure to their supervisor and Health Services in accordance with LBNL's policies on "Incident Review and Reporting" (see PUB-3000, Sections 5.1 and 26.7.12).
- Sharps Injury Log: The OSHA Reporting and Recording Occupational Injuries and Illnesses Standard requires a Sharps Injury Log for the recording of percutaneous injuries from sharps contaminated with BBP material (see 29 CFR1904.8). The information in the Sharps Injury Log must be recorded and maintained in such a manner as to protect the confidentiality of the injured employee. The Sharps Injury Log must contain the type and brand of device involved in the incident, the department or work area where the exposure incident occurred, and an explanation of how the incident occurred. This log may be maintained on the OSHA 300 Form, provided that the type and brand of the device causing the sharps injury is recorded, and sharps injury records may be easily separated from other types of work-related injuries and illnesses. LBNL maintains sharps injury information on the OSHA 300 Form in accordance with OSHA regulations. In addition, the LBNL Health Services Group maintains a separate, confidential log containing sharps injury information required by OSHA.

Consult the LBNL Health Services Group ((510) 486-6266), Health Services Web site, and PUB-3000 (i.e., Chapter 3 (*Health Services*)) for additional information. See Section 5.10.2 of this manual for additional information on worker exposure, injury, and illness reporting.

5.4 Personal Protective Clothing and Equipment

Use of safety equipment including personal protective equipment (PPE) is another element of BL1 and BL2 containment. PPE is clothing or equipment worn by workers to protect the body from injury by hazardous agents or materials. PPE may include foot, hand, eye, face, body, and respiratory protection.

PPE must be used, maintained, and disposed of in accordance with federal regulations, biosafety standards, and LBNL-specific PPE policies to prevent the spread of contamination and accidental infection. LBNL policies related to PPE when working with biological materials are described in this section and the following policy documents:

- PUB-3000, Chapter 19 (Personal Protective Equipment)
- PUB-3000, Chapter 4, Section 4.13, and the LBNL Respiratory Protection Program
- *Medical and Biohazardous Waste Generator's Guide* (PUB-3095)

The PPE section of the *Chemical Safety Hygiene Plan* (CHSP) should also be consulted regarding PPE requirements and guidelines related to work with chemicals.

The following PPE requirements are related to biosafety:

- Area-specific PPE requirements must be established for all Technical Areas (e.g., laboratories) and must be posted on the LBNL entrance placard. Minimum PPE for laboratories where biological materials are stored or handled includes safety protective eyewear, long pants, and closed-toe shoes. Area PPE requirements apply to the entire Technical Area unless an exception is granted in accordance with the procedure described in PUB-3000, Chapter 19, Appendix A.
- Activity- or operation-specific PPE requirements are assessed and defined in the Biosafety Work Authorization, which covers what PPE must be used (e.g., gloves, laboratory coats, and safety glasses) and any maintenance (e.g., laundering) or disposal requirements.

General requirements and conditions for use of PPE related to biosafety include:

- The supervisor or work lead is responsible for:
  - Determining what PPE is required to prevent occupational exposure
  - Providing at no cost to an employee the PPE required by this section or specified in the Biosafety Work Authorization. This PPE must be readily available in appropriate sizes.
  - Ensuring that employees and visitors properly use and store required PPE
- The EH&S Division is available to assist supervisors or work leads in evaluating work activities and selecting appropriate PPE.
- Employees and visitors are responsible for using PPE when required and whenever the work poses a reasonable probability of eye injury or exposure.
- In general, removed PPE must be:
  - Decontaminated when needed, or
  - Disposed of in accordance with LBNL medical/biohazardous, hazardous, and radiological waste management requirements.
- PPE that protects against exposure to BBP materials is considered appropriate if it does not permit BBP material (e.g., human blood or cell culture solution) to pass through the employee's work clothes, street clothes or undergarments, skin, eyes, or other mucous membranes under normal conditions of use and for the duration of time in which the PPE will be worn.

5.4.1 Body Protection

Protective laboratory clothing is a garment such as a lab coat, gown, smock, or uniform designed to keep personal clothing, forearms, or other exposed bodily surfaces protected from contamination by biological materials or exposure to other hazards. The term "protective laboratory clothing" typically applies to garments worn in the laboratory, but may also apply to garments worn in nonlaboratory work (e.g., health care).

The following biosafety criteria are applicable to wearing protective laboratory clothing:

- Protective laboratory clothing should be worn to prevent contamination of personal clothing when working at BL1.
- Protective laboratory clothing must be worn when working at BL2 or when working with RG2 or other hazardous materials. This clothing must be removed and left in the laboratory before leaving for nonlaboratory areas (e.g., cafeteria, library, administrative offices).

Protective laboratory clothing removed after use at BL2 or with biohazardous materials must be handled in one of the following ways:

- Placed in a laundry bag or container for cleaning by a qualified laundry service
- Disposed of in accordance with LBNL medical/biohazardous, hazardous, and radiological waste management requirements
- Stored for reuse if not contaminated. Such clothing stored for reuse should be stored in a manner that would not contaminate other items in case the protective clothing has unknown contamination (e.g., separate coat hook).

Protective laboratory clothing and other laundry contaminated with RG2 materials should be handled as noted below, and laundry contaminated with BBP materials must be handled as follows:

- Handled as little as possible with a minimum of agitation
- Bagged or containerized at the location where it was used but not sorted or rinsed in the location of use
- Placed in bags or containers that have biohazard labels, are red in color, or are identified by an alternative laundry labeling or color-coding system that uses universal precautions
- Placed and transported in bags or containers that prevent soak-through or leakage of fluids to the exterior if the laundry is sufficiently wet

Place protective clothing in properly identified laundry bags.

5.4.2 Eye and Face Protection

Eye protection is a safety device such as safety glasses with side shields or goggles worn over the eyes to prevent injury to the eye or exposure to biological agents. **Face protection** is a safety device such as a face mask, face shield, or other splatter guard worn over all or part of the face to protect the face from injury or exposure to biological agents. Face masks or respirators that are occasionally used for face protection are discussed in Section 5.4.5 of this manual.

Eye and face protection is used by laboratory and other workers to protect the eyes and face from splashes, splatters, or flying debris and hand-eye contact with biological materials. Contact by these means may result in injuries to the eyes and face or accidental inoculation via the eyes, nose, or mouth and subsequent infection and disease.

The risks noted above are prevented by using eye and face protection in accordance with the following requirements:

- As a minimum requirement, safety glasses with side shields must be worn at all times when in a Technical Area such as a laboratory. Area PPE requirements apply to the entire Technical Area unless an exception is granted in accordance with the procedure described in PUB-3000, Chapter 19, Appendix A. Additional eye or face protection may be necessary when handling chemicals or biological materials (e.g., goggles, face shield).

- Eye protection must be worn when conducting procedures that have the potential to create splashes of biological agents, biohazardous materials, or other hazardous materials.
- Eye and face protection (e.g., goggles, face mask, face shield, or other splatter guard) must be used when it is anticipated that splashes, sprays, splatters, or droplets of infectious or other hazardous materials may be generated and could contaminate the eyes, nose, or mouth (e.g., when RG2 microorganisms must be handled outside the biosafety cabinet or containment device). This eye and face protection must be included in the Biosafety Work Authorization risk assessment and disposed of with other contaminated laboratory waste or decontaminated before reuse.

Eye protection using safety glasses. Source: LBNL EH&S.

LBNL provides prescription safety glasses when needed via the EH&S Health Services Group and a staff optometrist. Personnel who need consultation or require prescription safety glasses should schedule an appointment with the optometrist by calling the Health Services Group at (510) 486-6266.

5.4.3 Hand Protection

Hand protection is a glove or other safety device used on the hand to prevent injury to the hand or direct skin contact with biological materials. Hand protection is used by laboratory and other workers to protect the hands from harmful physical, chemical, biological, radiological, or other agents or hazards. These agents or hazards may cut, lacerate, abrade, or burn the skin; absorb through the skin; pass through breaks in the skin; or be spread as contamination. Although there are relatively few microbes that can penetrate unbroken skin, there are many circumstances that may cause a break in the skin, such as a cut or puncture from a sharp (see sharps in Section 5.6.6.1). In the case of biological materials, gloves prevent the worker's hands, fingers, and nails from being contaminated. Spread of biological contamination from the worker's exposed hands or contaminated gloves to the worker's mucous membranes or other surfaces may also cause infection and disease in the worker or other people.

Glove selection may need to consider protection of the worker from different hazards or serve multiple purposes. For example, gloves used for handling chemical and biological materials may need to be resistant to the chemicals being handled, liquid permeation, and physical damage (see the PPE section of the CHSP). But the remainder of this section is focused only on glove

criteria that are important for biosafety and gloves that provide protection from biological materials or liquids.

The following criteria are applicable to glove selection, use, and disposal:

- In general, gloves should be worn to protect the hands from exposure to biological materials or organisms that may present a biological risk. Gloves must be worn to protect hands from exposure to hazardous materials, including: organisms containing recombinant DNA, recombinant experimental animals, RG2 materials, BBP materials or surfaces and items contaminated with BBP materials, when touching mucous membranes and nonintact skin of patients, and when performing vascular access procedures such as phlebotomies.
- Glove selection should be based on an appropriate risk assessment. Use of standard nitrile or latex examination gloves is considered adequate for handling most biological materials, and is assumed in the Biosafety Work Authorization. The need for gloves with any additional safety features to handle biological materials should be documented in the Biosafety Work Authorization. The JHA process should be used to assess other hand hazards and glove requirements.
- Alternatives to latex gloves should be available because some workers are known to develop allergic reactions to latex. Exposures to latex may result in skin rashes; hives; flushing; itching; nasal, eye, or sinus symptoms; asthma; and (rarely) shock.
- When working at BL1 and BL2, workers should remember the following:
  - Change gloves when contaminated, when their integrity has been compromised, or when otherwise necessary. When working at BL2, wear two pairs of gloves when appropriate.
  - Remove gloves and wash hands when work with hazardous materials has been completed and before leaving the laboratory. Gloves that were used in BL1 or BL2 work must not be worn outside the laboratory.
  - Do not wash or reuse disposable gloves. Dispose of used gloves with other contaminated laboratory waste. Hand washing protocols must be rigorously followed.

5.4.4 Foot Protection

Footwear appropriate to the worker's work activities and conditions must be worn at all times. In a Technical Area such as a laboratory, or areas where chemical or biological materials are stored or handled, closed-toe shoes must be worn at all times, and open-toe shoes and sandals are not permitted. In some cases, LBNL requires workers to wear safety shoes for other hazards such as falling heavy objects. See PUB-3000, Section 19.3 (*Foot Protection*), for additional information.

5.4.5 Respiratory Protection, Respirators, and Face Masks

Workers who conduct procedures that may generate aerosols containing harmful levels of infectious agents must use controls such as biosafety cabinets (BSCs), enclosed containment systems, or respirators to avoid inhaling the agents. In general, a BSC should be used as the principal device in laboratories to contain infectious splashes or aerosols generated by numerous microbiological procedures (see Section 5.6.4.2 and Appendix E of this manual for additional BSC information). Other engineered containment devices such as safety centrifuge cups should also be used. When engineering controls are not feasible

or appropriate for the work, respirators may be needed to provide **respiratory protection** (e.g., potential exposure to airborne transmissible disease agents during patient care).

Respirators or face masks are occasionally worn by workers while conducting work with biological materials. There are important differences in design, purpose, and requirements between types of respirators and face masks that may be used for biological materials:

- A **respirator** is a device designed and certified to protect the wearer from the inhalation of harmful atmospheres. A respirator may be a required respiratory control or worn voluntarily by the worker. A respirator might also provide face or product protection. Types and examples of some respirators:
  - A **negative-pressure, air-purifying respirator** is a tight-fitting respirator in which the air pressure inside the facepiece is negative during inhalation with respect to the ambient air pressure outside the respirator, and an air-purifying filter or cartridge removes specific air contaminants. Examples include the following types of cartridge and filtering facepiece respirators:
    - A **negative-pressure, air-purifying, cartridge respirator** is a respirator that uses a filter, sorbent, or catalyst housed inside a cartridge to remove contaminants from the air. Examples are respirators using an N95 or P100 cartridge particulate filter that is 95% and 100% efficient, respectively.
    - A **filtering facepiece respirator** is a negative pressure, air-purifying respirator with a particulate filter as an integral part of the facepiece or with the entire facepiece composed of the filtering medium. A filtering facepiece respirator is sometimes incorrectly referred to as a **dust mask** or an **N95 respirator.** The term “dust mask” is an inaccurate term because a filtering facepiece respirator is a respirator, not a face mask. In addition, filtering facepiece respirators are not to be confused with N95 respirators, because only cartridge-type respirators use N95 filters.
  - A **positive-pressure respirator** is a respirator designed to maintain positive pressure inside the facepiece during exhalation and inhalation. Examples include a powered air-purifying respirator or a supplied-air respirator, which are not normally used at LBNL for biosafety purposes.
- A **face mask** is a loose-fitting, disposable device that covers the worker’s nose and mouth and is not a respirator. Examples of face masks include products labeled as surgical, medical, dental, or isolation masks. A face mask might be worn in combination with eye protection to protect the nose and mouth from splatters or sprays, or the face mask might prevent the wearer from contaminating a product, patient, lab animal, or surface from particles (e.g., droplets) expelled from the nose or mouth. Face masks are not intended to protect the wearer from inhalation of airborne agents and must not be used for respiratory protection.

Filtering facepiece respirator.
Source: CDC courtesy of Moldex Metric Inc. (April 2009).

Face mask
Source: CDC (April 2009)

The following requirements are applicable to respirator uses, regardless of why the respirator is worn:

- The respirator must be issued and worn in accordance with PUB-3000, Section 4.13, which includes the LBNL Respiratory Protection Program document. See these polices for additional information and consult your EH&S Industrial Hygienist. Voluntary use of a filtering facepiece that is not a required respiratory control requires a hazard evaluation and training before use, but unlike other required respirator uses, does not require a medical evaluation or fit-testing.
- A risk assessment for the respirator must be documented in the Biosafety Work Authorization if the respirator use is related to the handling of biological materials.

5.5 Labels and Signs

Biological materials, agents, waste, potentially contaminated items, and laboratory rooms must be properly identified with labels, signs, or colors. Identification is needed so that responsibilities, material identities, hazards, or controls are communicated to workers, visitors, and others. These labels, signs, and colors must be displayed in accordance with LBNL policies and applicable requirements in the biosafety standards as summarized in this section.

A biohazard label or red color is typically required to provide warning when a biohazardous condition may be present. A **biohazard label** is a sign that is predominantly fluorescent orange or orange-red. It also contains a biohazard symbol and the word “Biohazard” in a contrasting color. The label shown below displays the required biohazard legend:

Biohazard label. Source: 29 CFR 1910.1030(g)(1)

The following are biosafety criteria for labels, signs, and colors:

- Information or labels should be visible on containers of biological materials or agents so that their content can be identified.
- A biohazard label should be posted as a best management practice on primary equipment that uses, stores, or may be contaminated with RG2 agents or materials.
- Work with BBP materials requires:
  - Biohazard labels, red containers, or red bags for waste containers, refrigerators, freezers, or other containers used to store, transport, or ship BBP materials
  - Biohazard labels, red containers, or red bags for containers or bags used for laundry that may be contaminated with BBP materials
  - Biohazard labels used to indicate which equipment parts remain contaminated with BBP materials

- Caution placards and other information must be posted at laboratory entrances, including a biohazard label for BL2 work areas. See additional details in the next paragraph.
- Consult the *Medical and Biohazardous Waste Generator's Guide* (PUB-3095) for details on labels and colors for sharps containers, waste containers, and waste bags in designated red-bag or clear-bag areas. A determination must be made in the Biosafety Work Authorization as to whether the work will generate either regulated medical waste (i.e., red-bag waste that is regulated by the California Department of Health Services) or nonregulated biohazardous waste not (i.e., clear-bag waste).

The following criteria must be implemented when posting an entrance to BL1 or BL2 laboratory area:

- A Caution placard must be posted at the entrance to a Technical Area as specified in the LBNL CHSP.
- Area PPE requirements must be included on the Caution Placard as specified Chapter 19 of PUB-3000 (*PPE*).
- A biohazard label must be posted (typically on a placard) at the entrance to each BL2 work area to advise entering personnel of potential biological hazards.
- When infectious agents (i.e., human pathogens) are present or there are organisms that require special provisions for entry (e.g., vaccination), additional biological hazard warning signage is required at the entrance to the laboratory. This signage must incorporate the universal biohazard symbol and include: the laboratory's biosafety level; the identity of the agent(s) or the words "Infectious Agent(s)"; the name and telephone number of the supervisor, work lead, prinicipal investigator (PI), or other responsible personnel; and any special requirements or procedures for entering and exiting the laboratory. The CHSP Caution Placard will be used to accomplish these additional signage requirements. Any requirements for posting identities of agents or posting special entry and exit procedures will be specified in the BUA.
- Other LBNL requirements for signage (e.g., radiological) may also apply to the entrance to be posted.

5.6 Facilities, Laboratory Equipment, and Related Practices

This section describes in a topical manner biosafety engineering and work practice controls related to standard facility design and laboratory equipment. Properly designed and used facilities, facility equipment, laboratory equipment, and lab tools provide protection for laboratory workers, persons outside the laboratory, the public, and the environment.

See Sections 4.1, 4.2, and 4.3 of this manual for a general discussion of the principles of standard laboratory practices, equipment, and facilities. See Appendix C of this manual for a summary of standard laboratory practices, equipment, and facilities categorized as BL1 and BL2. See PUB-3000, Section 26.7.6, for a discussion of the facility design process at LBNL related to biosafety.

5.6.1 Cleanable Surfaces and Furnishings

In general, laboratory facilities and furnishings should be designed and maintained so that they are durable, will not trap contamination, and can be easily cleaned. The following BL1 and BL2 laboratory criteria specified by BMBL and apply to this objective:

- The laboratory should be designed so that it can be easily cleaned or decontaminated.

- Carpets and rugs in laboratories are not permitted.
- Laboratory furniture must be capable of supporting anticipated loads and uses.
- Spaces between benches, cabinets, and equipment should be accessible for cleaning.
- Benchtops must be impervious to water and resistant to heat, organic solvents, acids, alkalis, and other chemicals.
- Chairs used in laboratory work must be covered with a nonporous material that can be easily cleaned and decontaminated with an appropriate disinfectant.

BMBL, fifth edition, added the new requirement noted above for chairs used in BL1 laboratory work. This new requirement for BL1 work involves significant costs to replace or modify chairs covered with porous material (e.g., cloth or mesh cushions). LBNL divisions may develop and document a corrective action that specifies a phase-in period to replace chairs with porous cushions used in BL1 laboratory work. During any phase-in period, new chairs used in BL1 laboratory work must meet the requirement to be covered with a nonporous material.

5.6.2 Doors and Windows

Laboratory doors and windows provide a means to control personnel access to the laboratory, control vectors such as insects and rodents, and maintain laboratory air-flow balance. These controls are elements of standard BL1 or BL2 laboratory practices or facilities.

The following biosafety criteria from BMBL and Appendix C are applicable to laboratory doors and windows:

- BL1 and BL2 laboratories should have doors for access control. BL2 laboratory doors should be self-closing and have locks in accordance with LBNL standards. When the laboratory is unoccupied during nonbusiness hours, access to the laboratory should be controlled (e.g., by locking doors to the laboratory areas and/or doors to the building entrance).
- BL1 laboratory windows that open to the exterior should be fitted with screens. BL2 laboratory windows that open to the exterior are not recommended. However, if a BL2 laboratory has windows that open to the exterior, they must be fitted with screens.

5.6.3 Plumbing Systems and Equipment

Plumbing-related systems and equipment that have requirements related to biosafety include handwashing sinks, sanitary sewer drains, water systems and backflow protection, emergency eyewash and shower units, and pipes. These systems provide needed utilities and containment when used properly. When used incorrectly, these systems may provide a route of exposure to personnel or the environment.

5.6.3.1 Sinks and Handwashing

BL1 and BL2 laboratories must have a sink with running water for handwashing. In BL2 laboratories, the sink should be located near the exit door and may be manually, hands-free, or automatically operated. **Handwashing sinks** should be provided with a soap dispenser and paper towel dispenser as a best management practice. When working with BBP materials, the sink facility is called a **handwashing facility**. A handwashing facility must have an adequate supply of potable running water, soap, and single-use towels or hot-air drying machines.

Personnel working at BL1 or BL2 laboratories must wash their hands a) after working with potentially hazardous materials, recombinant materials, and animals; b) after removing gloves; and c) before leaving the laboratory.

Handwashing with soap and water. Source: LBNL EH&S.

When work involves potential exposure to BBP materials outside of the laboratory (e.g., health care) and handwashing facilities (e.g., potable water and a sink) are not feasible, an appropriate antiseptic hand cleanser in conjunction with clean cloth/paper towels or antiseptic towelettes may be provided. When antiseptic hand cleansers or towelettes are used, hands must be washed with soap and running water as soon as possible.

5.6.3.2 Drains and Disposal

Laboratory sinks must typically be drained into the sanitary sewer system. In general and as a best management practice, liquids that contain biological material that is potentially viable or biologically active and not contaminated with other hazardous or radioactive material should be properly decontaminated with a disinfectant before disposal into the sanitary sewer system (see Section 5.7 (Decontamination, Waste, and Decommissioning) below. All biological liquid material considered medical/biohazardous waste must be decontaminated before disposal (see the *Medical and Biohazardous Waste Generator's Guide* (PUB-3095)).

5.6.3.3 Water Systems and Backflow Prevention

Backflow-prevention devices are required in building water systems or connection points to prevent contaminated liquid or water from being inadvertently sucked into the potable water system of the building. For example, a backflow-prevention device called a vacuum breaker is often integrated into the gooseneck of the laboratory sink faucet. This device prevents liquids from being drawn up into the faucet's water system in case a laboratory worker connects tubing to the faucet's serrated hose end.

Laboratory faucet with backflow prevention device. Source: Grainger (May 2010).

Potable water is typically supplied to each laboratory building. This water supply is separated through backflow-prevention devices in the building's plumbing system into potable and industrial water systems or sources. Plumbing fixtures that must be supplied with potable water include emergency eyewashes and showers and fixtures used in restrooms, in kitchens, or as drinking sources (e.g., toilets, sinks, or drinking faucets). Water connected to other fixtures or equipment in the laboratory or building must be separated from the fixtures that require potable water by proper backflow-prevention devices. When the water system is correctly designed and

labeled, water pipes labeled as industrial water are separated from the potable water system by a backflow-prevention device(s) in the building's water system. Connection of laboratory sinks, laboratory equipment, or industrial equipment to pipes that also provide water to potable fixtures requires proper installation of a backflow-prevention device. Contact your building's facilities service provider (e.g., LBNL Facilities) for proper plumbing advice and hardware.

5.6.3.4 Emergency Eyewashes and Showers

Emergency eyewash is a plumbing unit designed to properly flush chemical, biological, or other hazardous agents off the face and out of mucous membranes such as the eyes. Use of an eyewash prevents injury to the eye or exposed body surfaces. It also prevents an agent from penetrating into the body. An emergency eyewash must be readily available to BL2 work areas.

Ready access to a sink and emergency eyewash without strict distance-to-use requirements is normally sufficient for washing biological contamination from the body, because:

- Intact skin is considered a good barrier to most biological agents;
- Biological agents do not cause immediate tissue damage to skin or eyes; and
- An eyewash unit works well to flush the face (e.g., eyes, nose, and mouth areas).

However, in areas where there is also a splash hazard to certain chemicals (e.g., corrosives, eye irritants, chemicals that are toxic via skin or eye contact), the CHSP specifies that a combination **emergency eyewash and shower** unit must be reachable within 10 seconds via an unobstructed path. When combination eyewash and shower units are provided for potential chemical exposures, the number and placement of units is often sufficient to also meet the biosafety requirement for an emergency eyewash being readily available in BL2 work areas. Installation, maintenance, and use of all emergency eyewash and shower units must comply with the eyewash and shower requirements in the CHSP.

5.6.4 Ventilation and Hoods

Room ventilation and hoods provide for control of potential biological aerosols, other harmful atmospheres, odors, and smoke caused by fires by providing general room air dilution, directional air flow, and enclosure to contain and exhaust airborne agents. Room ventilation and hoods must be designed and maintained to established standards, guidelines, and LBNL policies.

5.6.4.1 Room Ventilation

The volume and balance of laboratory room ventilation are important safety controls. There may be specific ventilation requirements for specific laboratory uses, but the following design requirements generally apply to laboratory rooms that use biological and hazardous materials:

- Laboratory rooms must be negative in pressure relative to any fire exit corridor.
- Laboratory rooms should be negative in pressure relative to nonlaboratory rooms (e.g., offices).
- BL2 rooms should be negative in pressure relative to other areas. If researchers indicate that a BL2 area should be positive in pressure for research purposes (e.g., contamination control), a negative-pressure anteroom leading to the BL2 area may be required, or the risk assessment process may indicate that it is acceptable for air to flow from the BL2 area into another laboratory area.

- Air exhausted from laboratories should not be recirculated to rooms outside the laboratory.
- Laboratory exhaust ventilation flow rates must meet minimum requirements (e.g., 1 cubic foot per minute of exhaust air per square foot of laboratory space).

5.6.4.2 Hoods and Biosafety Cabinets

Hoods are enclosures or shaped inlets designed to conduct contaminated air into an exhaust duct system, or a filter that safely captures the contaminant. This section discusses hoods designed to provide for the safety of the worker or the environment such as biosafety cabinets, laboratory fume hoods, exhausted equipment enclosures, gloveboxes, and other local exhaust points. This section does not cover ventilated enclosures such as laminar flow clean benches that are not designed to protect the worker or the environment from contaminated air.

Hoods used for safety must be designed, installed, tested, and surveyed in accordance with LBNL Environment, Safety, and Health (ES&H) standards and policies for all hoods and **high-efficiency particulate air (HEPA) filters** (see PUB-3000, Section 4.6). The EH&S Industrial Hygiene Group manages the ventilation safety program and records hood locations, surveys, and testing in the Ventilation Database. Supervisors or work leads should ensure that hood safety survey stickers or labels indicate the hood has been surveyed or tested and determined to be safe for use.

Laboratory hood.
Source: LBNL EH&S

Hood survey label and monitor.
Source: LBNL EH&S

BSC certification label.
Source: LBNL EH&S

5.6.4.2 (a) Biological Safety Cabinets and Other HEPA-filtered Containment

Biological safety cabinets or **biosafety cabinets (BSCs)** are hoods with HEPA filters that provide personnel, environmental, and product protection when appropriate practices and procedures are followed. Appendix E of this manual summarizes BSC types and provides additional BSC information. Various types of BSCs and similar hoods are used at LBNL. Listed below are more common types:

- Typical BSCs used at LBNL are Class II, Type A2 BSCs built by BSC manufacturers. These BSCs discharge exhaust directly though a HEPA filter and into the laboratory.

- Class II, Type B1 BSCs are used less commonly than Class II, Type A2 BSCs. These BSCs discharge exhaust air through a HEPA filter, but exhaust air is then ducted to the roof so that toxic chemicals that cannot be filtered by the BSC's HEPA filter are not exhausted back into the laboratory.
- Researchers sometimes acquire or build equipment such as cell sorters or robotic enclosures that cannot be categorized as a BSC. These specialized pieces of equipment should be tested and managed using many of the same BSC ventilation, testing, and management principles.

BSCs or other safety equipment, PPE, or other physical containment devices (e.g., safety centrifuge cups) must be used whenever procedures with a potential to create infectious aerosols or splashes are conducted, or whenever high concentrations or large volumes of infectious agents are used. Examples of such procedures include pipetting, centrifuging, grinding, blending, shaking, mixing, vortexing, sonicating, opening containers with pressure differentials, or harvesting infected tissues. The BSC is the principal BL2 device used to provide containment of infectious splashes or aerosols generated by many microbiological procedures.

Biosafety cabinet. Source: LBNL EH&S

Aerosols and aerosol generation. Source: unidentified.

BSCs must be:

- Designed, installed, tested, and surveyed in accordance with LBNL ES&H standards and policies for all hoods and HEPA filters (i.e., PUB-3000, Section 4.6).
- Designed, constructed, installed, operated, used, decontaminated, and tested in accordance with BSC guidelines in Appendix A of BMBL and summarized in Appendix E of this manual.
- Managed in accordance with the following list of BSC policies:
  - The Biosafety Work Authorization must include specific BSC uses and information, and an assessment of procedures for RG2 materials that have the potential to produce aerosols or splashes.
  - The EH&S Industrial Hygiene Group is responsible for maintaining records of BSC locations, surveys, and testing in the Ventilation Database, and managing surveys, tests, and gaseous decontaminations of BSCs. BSC testing, certification, and gaseous decontaminations are performed by a subcontractor. The EH&S Division normally pays for each BSC's annual safety test and certification when the BSC is used for safety.

- Line management owners of BSCs have primary responsibility for paying costs and ensuring the proper purchase, use, maintenance, testing, and decontamination of BSCs.
- BSCs used for BL1, BL2, or other safety levels must be tested and certified before initial use, after being moved, and on a nominal one-year cycle.
- BSCs and their filters must be decontaminated with a gaseous decontaminant before being moved or repaired internally, unless an alternative procedure is approved by the Biosafety Officer.
- BSCs must be installed and operated according to the manufacturer's recommendations.

When a new BSC is needed or a BSC needs to be moved, contact the EH&S Industrial Hygiene Group or Biosafety Office for assistance with selecting, testing, and decontaminating BSCs.

5.6.4.2 (b) Laboratory and Other Hoods

Other hoods that are not exhausted through HEPA filters are typically used for most nonbiological laboratory airborne hazards or concerns. These hoods are generally used for control of chemical hazards, gas hazards, process emissions, odors, and heat. Examples of such hoods include laboratory-type ("fume") hoods, gas chromatograph local exhaust points, and autoclave canopy hoods. These hoods can be used for chemicals including biological toxins, but are not adequate for control of potential infectious biological aerosols or toxic particulate.

5.6.5 Food Facilities and Eating

Eating, drinking, smoking, handling contact lenses, applying cosmetics, and storing food for human consumption are not permitted in BL1 and BL2 laboratory areas. Food must be stored outside the laboratory area in cabinets or refrigerators designated and used for this purpose.

5.6.6 Laboratory Tools and Equipment

5.6.6.1 Sharps

This section describes types and hazards of sharps, states requirements from biosafety standards, and outlines LBNL's policies on sharps related to biosafety. A **sharp** is an object that can penetrate the skin. A sharp is often a tool, device, or material that typically has a sharp edge or point such as a needle, scalpel, razor, blade, broken glass piece, broken capillary tube, or an exposed wire end.

Sharps examples. Source: unidentified.

Sharps may cause cut or puncture wounds. In addition, sharps contaminated with a biological material may result in the parenteral inoculation of a worker with an infectious or recombinant agent that may cause a laboratory-acquired infection or another disease. **Parenteral** is an adjective that refers to a route of administration that involves piercing the mucous membranes or skin barrier through events such as punctures, lacerations, abrasions, and bites.

Sharp tools are often designed with a built-in safety feature or mechanism that effectively reduces the risk of accidental skin penetration and a biological exposure incident. These tools are called **safety-engineered sharps** or **safety-engineered needles**. Examples include devices that blunt, sheath, or withdraw the sharp when the sharp edge or point has been used or is not in use. The OSHA Bloodborne Pathogens Standard has specific definitions and requirements for the use of safety-engineered sharps that are discussed in the next section.

5.6.6.1 (a) Sharps Risk Assessment and Documentation

Use of sharps should be assessed as part of the risk assessment for work with biological materials. The following general process should be followed:

- The use of sharps is assessed and controls are defined in each:
  - Worker's JHA for use of sharp tools
  - BUA and ECP for all sharps involved with RG2 and BBP materials
- The sharps risk assessment that is conducted when developing the BUA or ECP should:
  - Evaluate what sharps may be needed or might be present
  - Evaluate if a safer alternative to the sharp can be used to accomplish the work. For example: Plasticware should be substituted for glassware whenever possible at BL2.
  - Evaluate available sharp tools and pick the safest device that will accomplish the work. For example:
    - Safety-engineered needles rather than needles that cannot be sheathed after use
    - Scalpels with longer handles that are often more controllable than razor blades
    - Razor blade holders rather than unprotected blades

- Evaluate the machine's point-of-operation guarding if there is an exposed sharp edge or point on a machine. For example:
  - A cutting blade on a microtome
  - Needles on a colony picking robotic machine

Use of sharps with RG2 materials should be documented in the BUA. In addition, use of sharps with BBP materials must be documented in the BUA or ECP, and the annual review and update of these plans must reflect changes in technology that eliminate or reduce exposure to BBPs (e.g., newly available devices designed to reduce exposure).

In addition, when the BUA or ECP covers medical procedures or devices that involve exposure to BBP material:

- **Sharps with engineered sharps injury protection (ESIP)** must be specified and used with a few exceptions. OSHA defines sharps with ESIP as a non-needle sharp or a needle device used for withdrawing body fluids, accessing a vein or artery, or administering medications or other fluids, with a built-in safety feature or mechanism that effectively reduces the risk of an exposure incident. See the OSHA fact sheet on safety needles and needleless systems for additional information. When a needle must be used as described above, a needle device with ESIP must be used unless one of the following four OSHA exceptions is documented in the BUA or ECP:
  - No needleless systems or sharps devices with ESIP are available in the marketplace for the procedure.
  - A licensed health care professional directly involved with a patient's care determines that available needleless systems or sharps devices with ESIP would compromise the patient's care or safety.
  - Available needleless systems and sharps devices with ESIP are not more effective in preventing exposure to BBPs than the alternative being used.
  - Sufficient information is not available on the safety performance of needleless systems or sharps devices with ESIP available in the marketplace, and the supervisor or work lead is actively evaluating such devices.
- The BUA or ECP's annual review and update must:
  - Reflect changes in technology that eliminate or reduce exposure to BBPs (e.g., newly available medical devices designed to reduce needlesticks).
  - Document consideration and implementation of appropriate, commercially available, effective, and safer medical devices.
  - Document how input was solicited from nonmanagerial employees responsible for direct patient care who are potentially exposed to injuries from contaminated sharps in the identification, evaluation, and selection of effective engineering and work practice controls.

5.6.6.1 (b) Sharps Use and Disposal

Sharps must be used and disposed of in accordance with:

- Laboratory BL1 and BL2 criteria in Appendix C of this manual
- The *Medical and Biohazardous Waste Generator's Guide* (PUB-3095)

When applying force to a handheld sharps tool, the sharp end of the tool should be pointed away from the worker's body.

Syringe with capped needle, needle disposal without recapping in sharps container, and glass sharps container. Sources: unidentified.

5.6.6.1 (c) Sharps Injury Reporting and Log

See Section 5.10 of this manual for requirements and procedures related to injury and accident reporting, and Section 5.3 for requirements and responsibilities related to logging sharps injuries.

5.6.6.2 Centrifuges

Rotational energies involved with most centrifuges can generate two serious hazards: mechanical failure, and dispersion of aerosols or droplets. This section describes general classes of centrifuges, and general operation and maintenance guidelines to minimize centrifuge hazards. Elements of these guidelines may or may not be applicable to specific centrifuge operations. Information in this section was adapted from the University of Minnesota's "Bio Basics Fact Sheet: Centrifuge Safety."

There are three general classes of centrifuges:

- Low-speed centrifuges that do not exceed 5,000 rpm are commonly made for benchtop use.
- High-speed centrifuges that do not exceed 25,000 rpm may include benchtop or floor models.
- Ultracentrifuges that may exceed 100,000 rpm are often found in core equipment areas. These centrifuges are the most expensive and potentially the most dangerous.

5.6.6.2 (a) Centrifugation Operation Guidelines

Before centrifugation:

- Each operator should review or be instructed on proper operating procedures and necessary information from the user manual.
- Use only rotors compatible with the centrifuge. Check the expiration date for ultracentrifuge rotors.
- Check tubes, bottles, and rotors for cracks and deformities before each use.
- Make sure that the rotor, tubes, and spindle are dry and clean.

- Examine O-rings. Replace if worn, cracked, or missing.
- Never overfill centrifuge tubes (do not exceed three-fourths full).
- Cap tubes before centrifugation.
- Balance buckets, tubes, and rotors properly.
- Check that the rotor is seated on the drive correctly, put lid on rotor, close the lid on the centrifuge, and secure it.
- When using swinging bucket rotors, make sure that all buckets are hooked correctly and move freely.

<u>During centrifugation:</u>

- Keep the lid closed at all times during operation. Never open a centrifuge until the rotor has stopped.
- Do not exceed safe rotor speed.
- The operator should not leave the centrifuge until full operating speed is attained and the machine appears to be running safely without vibration.
- Stop the centrifuge immediately if an unusual condition (e.g., noise or vibration) begins, and rebalance the load if needed. If a loud noise indicates significant mechanical failure such as rotor or container breakage, follow guidelines in Appendix G, Section G.5 (Centrifuge Malfunction or Spills) of this manual. Report other unusual conditions to the work lead. Evaluation by a manufacturer's representative may be needed.

<u>After centrifugation:</u>

- Allow the centrifuge to come to a complete stop before opening.
- Wear gloves to remove rotor and samples.
- Check inside of centrifuge for possible spills and leaks. Disinfect centrifuge and rotor thoroughly if necessary.
- Wash hands after removing gloves.

<u>Centrifuging RG2 materials:</u>

Follow the safety procedures noted above plus:

- Place a biohazard label on the centrifuge.
- Wear gloves when handling tubes or rotors.
- Avoid the use of celluloid tubes with biohazards. If celluloid tubes must be used, an appropriate chemical disinfectant must be used to decontaminate them.
- Use sealed safety cups, safety buckets, or sealed rotors with O-ring as secondary containment.
- Fill centrifuge tubes, load into rotors, remove from rotors, and open tubes within a biological safety cabinet.
- Wipe exterior of tubes or bottles with disinfectant prior to loading into rotor or bucket. Seal rotor or bucket, remove outer gloves, and transport to the centrifuge.
- Wait at least 10 minutes after the run to allow aerosols to settle before opening the centrifuge. Check for possible spills or leaks.
- Decontaminate centrifuge interior, safety cups or buckets, and rotors if spills or tube breakage occurs. Follow guidelines in Appendix G, Section G.5 (Centrifuge Malfunction or Spills).

5.6.6.2 (b) Centrifuge Maintenance Guidelines

Moisture, chemicals, strong cleaning agents, and other substances can promote corrosion of centrifuge parts and cause centrifuge failure. Long-term centrifuge use may also cause centrifuge failure. The following are general maintenance recommendations:

- Follow manufacturer instructions for maintenance and cleaning.
- Keep the centrifuge clean and dry.
- Clean up all nonhazardous spills immediately. Follow guidelines in Appendix G, Section G.5 (Centrifuge Malfunction or Spills), for biohazardous spills.
- Decontaminate rotors used with biological or radioactive materials (e.g., use 10% bleach for 30 minutes followed by 70% ethanol; let air dry to clean rotors and cups).
- Never clean rotors and associated parts with abrasive wire brushes.
- Store the rotor upside down in a dry place, with lids or plugs removed, to prevent condensation.
- Remove adapters after use. Inspect them for corrosion.
- Inspect rotors regularly. Remove rotors from use if they show any signs of defects. Report the defective rotors to a manufacturer's representative for inspection.
- To avoid rotor failure, record the length of time and speed for each high-speed rotor in a log book. Track and discard rotors according to the manufacturer's recommended schedule.

5.6.6.3 Waste Containers

Containers used to hold medical/biohazardous waste, sharps waste, or pathological waste must be placed in biohazardous waste containers and bags in accordance with the *Medical and Biohazardous Waste Generator's Guide* (PUB-3095).

5.6.6.4 Equipment Connected to Building Vacuum Systems

House vacuum systems used to evacuate air from containers, enclosures, or lines that contain biological materials should be equipped with a HEPA filter (or equivalent filter) to prevent biological materials or aerosols from being sucked inadvertently into the vacuum line. This is a general guideline for all biological materials, but the BMBL criteria for BL2 laboratory facilities specifically states that vacuum lines should be protected with a HEPA filter or equivalent, the filter must be replaced as needed, and liquid disinfectant traps may be required. Liquid disinfectant traps typically used in conjunction with tissue culture work inside a BSC are further detailed in Appendix E, Section E.3.3, of this manual.

5.7 Decontamination, Waste, and Decommissioning

Work surfaces, work areas, furniture, equipment, materials, and wastes involved in most work with biological materials must be routinely decontaminated during the work, and prior to transfer or disposal. This section 1) discusses principles of decontamination, 2) provides examples of antimicrobials used to decontaminate, and 3) summarizes or references requirements from the standards related to antimicrobials and decontamination of surfaces, equipment, and wastes. See the following policy sections and standards for additional information:

- Appendix F of this manual for more detailed information on decontamination processes and antimicrobials.

- PUB-3000, Section 26.5.7, for a summary of decontamination and waste standards and LBNL policies.
- BMBL, Appendix B, for BMBL guidance on strategies for decontaminating laboratory surfaces, items, and areas.

5.7.1 Decontamination Processes and Antimicrobials

Decontamination is a process that uses an antimicrobial to reduce or inactivate biological contaminants or components to an acceptable level so as to reduce or eliminate the possibility of transmitting pathogens to undesired hosts. An **antimicrobial** is a chemical or physical agent that is used in a decontamination process to prevent microbial growth. Prevention of microbial growth and pathogen transmission is needed to control contamination of the work, and to prevent disease in hosts such as laboratory workers, the general public, and other organisms in the environment. The decontamination process, level, antimicrobial, frequency, and specific method should be based on the work activity, agents that need inactivation, and decontamination objectives or requirements. Definitions of decontamination processes and levels, along with common examples of antimicrobials and processes, are listed in Table 11 below. Refer to Appendix F of this manual for additional information on decontamination and antimicrobials.

When using a chemical or physical antimicrobial to ensure decontamination is accomplished for biosafety purposes (i.e., protection of workers, public, agriculture, or environment):

- There should be information indicating that the selected antimicrobial will be effective when used in a certain manner for the biological materials or agents and equipment or surfaces that need to be decontaminated; and
- The antimicrobial should be used in accordance with its antimicrobial activity capabilities and conditions of use.

Antimicrobial information in Appendix F of this manual, information provided by manufacturers (e.g., labels or technical specifications), and other information may be used for selecting and using the appropriate antimicrobial. Effective decontamination can also be ensured by using an **Environmental Protection Agency (EPA)**–registered or **Food and Drug Administration (FDA)**–cleared antimicrobial product within its manufacturer-specified limits. See Appendix F, Section F.2.3, of this manual for additional information on commercial disinfectants and sterilants registered or cleared by the EPA and FDA.

Table 11
Decontamination Processes, Levels, and Antimicrobial Examples*

General Decontamination Process and Level	Antimicrobial Example	Example Decontamination Process
Sterilization is the process of completely destroying all living microorganisms and viruses.	Wet heat-steam	Autoclave at 121°C (250°F) for 15 minutes or more.
	Dry heat	Bake at 171°C for at least 1 hour, or Incinerate.
	Wet or dry heat	Place solid waste in a biohazardous waste container for autoclaving or incineration by a licensed LBNL subcontractor.
Disinfection is the process of generally eliminating nearly all recognized pathogenic microorganisms but not necessarily all microbial forms (e.g., bacterial spores) on inanimate objects.	Chlorine in sodium hypochlorite	Wipe clean hard work surfaces and equipment with a 1% solution of fresh household bleach, and allow to air dry for intermediate-level disinfection.
		Add household bleach to liquid biohazardous spills or liquid waste until a 10% concentration of household bleach is achieved for 20 minutes for high-level disinfection.
	Ethyl or isopropyl alcohol	Wipe clean hard work surfaces with a 70% solution of alcohol for low-level disinfection.
		Submerge precleaned items in 70% alcohol for 10 minutes for intermediate-level disinfection.
	Iodine	Wipe clean hard work surfaces with an idophor such as Wescodyne® for intermediate-level disinfection.
	Formaldehyde	Use formaldehyde in water (i.e., formalin) or in alcohol at 1% to 8% for low- to high-level disinfection, respectively.
	Ultraviolet (UV) light	UV light inside biosafety cabinet. Not recommended as a biosafety control because disinfection is limited, and light damages human tissue.
Sanitization is the process of generally reducing microbes by the use of general cleaning agents.	Soap and water, quaternary ammonium compounds, or disinfectants	Launder clothing or generally clean laboratory, restroom, room, and equipment surfaces.
Antisepsis is the application of a liquid antimicrobial chemical to human or animal living tissue.	Iodine	Wash hands with Betadine® skin cleanser containing **povidone-iodine (PVP-I)**, or apply 10% PVP-I solution in water to the injection site on a research animal.

* See Appendix F of this manual for additional information and specific conditions.

The OSHA Bloodborne Pathogens Standard requires that work surfaces contaminated with BBP material (as defined in Section 3.3.4 of this manual) must be cleaned with an "appropriate disinfectant." Appropriate disinfectants include household bleach diluted to concentrations ranging from 1% (i.e., 1:100) to 10% (i.e., 1:10) in water and certain disinfectants registered by the EPA or FDA. Household bleach at these concentrations is one of the most common and effective disinfectants used in the laboratory. **Household bleach** is a water-based solution of sodium hypochlorite (NaOCl) with a typical concentration of 5.25% by weight of the active sodium hypochlorite ingredient. In the U.S., Clorox® bleach is the best-known brand. See Appendix F, Section F.3.2.1, of this manual for additional details on the properties and use of bleach.

Steam heat used in autoclaves is also a common laboratory antimicrobial. An **autoclave** is a piece of equipment with a chamber used to sterilize items by applying wet heat (i.e., high-pressure steam) at temperatures above the normal boiling point of water and pressures above normal atmospheric pressure. Autoclaves are used to sterilize laboratory equipment or materials such as glassware, media, reagents, or waste. See Appendix F, Section F.5, of this manual for general information and guidelines on autoclave principles, operation, and maintenance typically needed to sterilize equipment and ensure operator safety.

5.7.2 Surface and Equipment Decontamination

In general, surface and equipment decontamination guidelines for BL1 and BL2 areas include:

- The work area should be cleaned and maintained in a sanitary condition.
- Surfaces or equipment where work with biological materials is conducted should be routinely decontaminated.
- Surfaces, furniture, or equipment contaminated with biohazardous materials should be decontaminated after spills and before repair, maintenance, or removal from the laboratory.

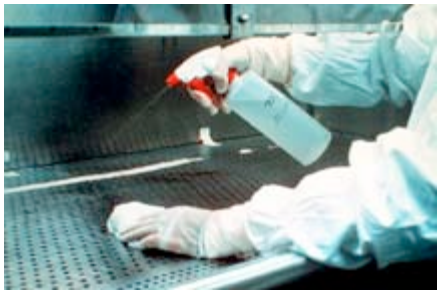

Biosafety cabinet surface decontamination. Source: unidentified.

Laboratory standard microbiological practices from BMBL and *NIH Guidelines* (see Appendix C of this manual) specifically require the following surface and equipment decontamination practices:

- At BL1 and BL2, work surfaces must be decontaminated with an appropriate disinfectant after completion of work and after any spill or splash of a potentially infectious or viable recombinant material.
- At BL2, laboratory equipment should be decontaminated on a routine basis and after spills, splashes, or other potential contamination.
  - Spills involving infectious materials must be contained, decontaminated, and cleaned by staff properly trained and equipped to work with infectious material.
  - Equipment must be decontaminated before repair, maintenance, or removal from the laboratory.

5.7.3 Waste Decontamination and Disposal

Laboratory standard microbiological practices and special practices from BMBL and *NIH Guidelines* (see Appendix C of this manual) for BL1 and BL2 specifically require that all cultures, stocks, and other potentially infectious or viable recombinant materials must be decontaminated before disposal using an effective method. Effective decontamination methods are covered in Section 5.7.1 and Appendix F of this manual. Responsibility for decontamination starts with the waste generator. In some cases, the waste generator performs the actual decontamination. In other cases, the generator selects the decontamination system and then prepares the waste materials for treatment by others.

LBNL uses the term **medical/biohazardous waste** to describe wastes that are biological materials, or that may be contaminated with biological materials and require inactivation (i.e., decontamination) in an approved manner prior to final disposal. See the *Medical and Biohazardous Waste Generator's Guide* (PUB-3095) for LBNL definitions and requirements for disposal of medical/biohazardous waste. Decontamination, collection, and disposal of medical/biohazardous waste will be conducted in accordance with PUB-3095, methods approved or known to inactivate the materials, and any requirements specified in regulatory permits (e.g., U.S. Department of Agriculture (USDA)) issued to individuals.

Contaminated items considered medical/biohazardous waste. Source: Michigan State University, Office of Radiation, Chemical, and Biological Safety (May 2010).

Labeled biohazardous container lined with a red biohazard bag. Transfer of closed biohazard bag to waste pickup container. Source: LBNL EH&S.

The EH&S Division Waste Management Group manages the disposal of LBNL medical/biohazardous waste. It also manages the contract with a licensed subcontractor that transports, treats, and disposes of LBNL's solid waste as regulated medical waste. Examples of such solid waste include materials that are placed in lined and labeled biohazardous waste containers, biologically contaminated sharps in sharps containers, and pathological materials such as carcasses.

Although Waste Management Group manages the waste component of the Biosafety Program, it is the responsibility of the waste generator to ensure that medical/biohazardous waste is properly:

- Inactivated before disposal (e.g., treatment of liquid culture with bleach prior to sanitary sewer disposal), or
- Contained in durable leakproof containers, labeled, and documented in the work area before further handling by the EH&S Division or the licensed LBNL subcontractor.

The Joint Genome Institute (JGI) is the only LBNL site that does not use a licensed subcontractor to dispose of solid biological waste as regulated medical waste. Instead, JGI uses autoclaves to sterilize solid, recombinant, biohazardous waste prior to disposal as detailed in PUB-3095.

5.7.4 Laboratory and Equipment Decommissioning and Moves

All surfaces and equipment should be cleaned and put into a safe condition prior to vacating laboratory spaces or relocating equipment. The Laboratory's Space Management Policy in the Regulations and Procedure Manual (§1.20) requires that laboratory and shop spaces be cleared of debris and contamination prior to transfer of ownership. The decommissioning section of the CHSP provides a good general description of requirements and resources for decommissioning laboratories and equipment.

Decommissioning should include decontamination and waste disposal methods appropriate for the biological materials that may be present and the materials or equipment to be decontaminated. Decommissioning may include:

- Laboratory surfaces and equipment should be decontaminated. Household bleach is commonly used in the concentrations and manners discussed in Appendix F, Section F.3.2.1, of this manual. Appendix F also provides other decontamination methods.
- Biohazard labels should be posted on any equipment or containers that still contain or may be contaminated with RG2 agents or materials as discussed in Section 5.5.
- Dispose of medical/biohazardous waste as described in Section 5.7.4.
- BSCs and their filters must be decontaminated with a gaseous decontaminant prior to being moved, unless approved by the Biosafety Officer (see Section 5.6.4.2 (a)).
- Custodians of equipment that will be moved by the LBNL Transportation Department must verify that the equipment is free of biological, chemical, and radiological hazards. This verification is accomplished when the equipment custodian places a completed LBNL Transportation Authorization Form on each piece of equipment to be transported (see PUB-3000, Section 5.8.13.1). Transportation Authorization Forms are issued to equipment custodians when they request an equipment move through the Work Request Center.

5.8 Access and Security

Laboratory supervisors and work leads conducting work at BL1 or BL2 must enforce LBNL Institutional policies that control access to the site and to laboratory facilities as described in the LBNL Site Security Plan. Policies and practices include, for example, the hosting of visitors and the issuance of gate passes, badges, and/or keys to control access to the site, building, and/or room based on each individual's business needs. In addition, laboratory areas should have doors for access control. Consult the Safeguards and Security Web site for security policies and additional information.

In addition to the above access requirements, the following additional controls are applicable when working at BL2:

- Laboratory doors should be self-closing and have locks designed in accordance with LBNL standards. When the laboratory is unoccupied during nonbusiness hours, access to the laboratory should be controlled (e.g., by locking doors to the laboratory areas and/or doors to the building entrance).
- All persons entering the laboratory must be advised of the potential hazards and meet any specific entry/exit requirements as communicated through laboratory door postings specified in Section 5.5 of this manual. Minimum biosafety hazard advisories include a required biohazard symbol posted at the entrance to the BL2 laboratory. Any additional biosafety requirements necessary for advising and protecting personnel entering and exiting the area will be specified in the BUA based on a risk assessment.

Additional security assessments and security measures should be considered when select agents, other agents of high public health or agricultural concern, or agents of high commercial value are introduced into the laboratory. In this case, advisory recommendations of Section VI (Principles of Laboratory Biosecurity) of BMBL should be considered. In addition, when a security risk assessment has determined that additional physical security measures are needed to mitigate specific vulnerabilities, the laboratory or facility may be designated a property protection area**.** Lastly, when the agents are select agents or toxins (see Section 3.3.2.5), then the security requirements of the select agent regulations must be implemented as outlined in a specific security plan for the laboratory or building. The term **biosecurity** is often used to describe the administrative and physical security measures used to protect higher-consequence microbial agents or toxins from loss, theft, diversion, or intentional misuse.

5.9 Pest Management

Biosafety level (e.g., BL1 and BL2) criteria in BMBL and the *NIH Guidelines* require a program to control pests such as insects and rodents. Pests such as flies, cockroaches, ants, or mice can mechanically transmit biological materials and pathogens.

Appendix G of BMBL provides guidance and requirements for **Integrated Pest Management (IPM)**. IPM is a comprehensive program approach that integrates housekeeping, maintenance, and pest control services. The primary goal of IPM is to prevent pest problems by managing the facility environment to make it less conducive to pest infestation. Along with limited applications of pesticides, pest control is achieved through proactive operational and administrative intervention strategies to correct conditions that foster pest problems. Research supervisors, work leads, and LBNL Facilities are each responsible for elements of IPM for each operation.

The LBNL Facilities Division is responsible for the general construction and maintenance of facilities including the design of laboratory buildings, periodic floor cleaning, disposal of general trash, and pest management. Pest management includes maintenance of a contract with a licensed California State/County applicator to provide insect and rodent control services. The licensed applicator conducts preventative services (e.g., periodically spraying the foundation of a building) and controls reported infestations. The Facilities Division also maintains the Facilities Work Request Center (510-486-6274) to track and respond to requests to repair and clean facilities and control infestations.

Research supervisors and work leads must ensure implementation of the following IPM elements:

- Program area surfaces and equipment can be easily cleaned (see Section 5.6.1) and are routinely cleaned and decontaminated (see Section 5.7.3).
- Medical/biohazardous wastes are routinely placed in designated waste collection barrels (see Section 5.7.4).
- The Facilities Work Request Center is contacted if additional services are needed from the Facilities Division to repair or clean the facility, or to control a pest infestation.

The following general guidelines may be used to prevent or control rodent infestations:

- Use rodent-proof containers with tight-fitting lids for storing food, washed utensils, and garbage so that rodents are not attracted to the building. Dispose of trash as soon as possible.
- Seal, screen, and cover all building openings greater than a quarter of an inch.
- Place sheds, wood piles, or other structures and debris away (e.g., 100 feet) from buildings. Cut grass, brush, and dense shrubbery.
- If a building has been abandoned or closed for long periods, open doors and windows to help ventilate the building, and then wait for at least 30 minutes before entering. Use mechanical ventilation if needed.
- Use spring-loaded traps or appropriate EPA-approved rodenticides to control the rodent population.

Note Appendix G of this manual for guidelines on the cleanup of small dead animals, nests, or droppings.

5.10 Incident, Accident, and Emergency Response

This section outlines policy-related incident response and reporting. Biosafety-related incidents may include worker exposure to biological material, injuries or illnesses involving or resulting from exposure to biological material, spillage of biological material, or release of biological material outside of biosafety secondary containment. Such incidents may require reporting, medical evaluation and treatment, emergency response, incident review and documentation, and/or corrective actions.

Response to biosafety-related incidents will be managed in accordance with this section and the following guidelines, policies, and authorizations:

- LBNL *Emergency Response Guide*
- PUB-3000, Section 5.1 (*Incident Reviewing and Reporting*)
- PUB-3000, Chapter 9 (*Emergency Management*)
- PUB-533, *Master Emergency Program Plan for LBNL*

- PUB-3000, Chapter 14 *(Lessons Learned*)
- PUB-2488, *Occurrence Reporting and Processing System* (ORPS)
- *Safeguards and Security Program Planning and Management*, DOE Manual 470.4-1, Section N (Incidents of Security Concern)
- applicable Biosafety Work Authorizations (see Section 5.1 of this manual)

5.10.1 General Incident Response and Reporting

Worker instructions for reporting incidents and general emergency response are covered in the LBNL ***Emergency Response Guide***. This guide provides response guidelines for a variety of common emergencies including biological spills and personal injury. It also provides both emergency and nonemergency telephone numbers. The guide is available on the EH&S Emergency Services Web site and as a wall-mountable flip chart. The *Emergency Response Guide* must be posted in areas wherever work with biological materials is conducted, and emergency response guidelines should be employed when responding to incidents.

Chapter 5, Section 5.1, of PUB-3000 also provides general requirements for incident reviewing and reporting such, as responding to emergencies, and reporting and reviewing incidents and occupational injuries or illnesses.

Division Directors and their designees are also responsible for reporting certain adverse or abnormal occurrences in accordance with the ***Occurrence Reporting and Processing System*** **(ORPS)** polices and system. In addition to ORPS reporting, incidents of security concern must be reported to LBNL Security.

5.10.2 Worker Exposure, Injury, or Illness

Workers are responsible for immediately reporting all occupational injuries, illnesses, and exposures to biological materials of concern to their supervisor and Health Services. The Biosafety Officer must also be notified of exposures to biological materials of concern or any related illness. Health Services will manage the occupational health case and initiate a **Supervisor Accident Analysis Report (SAAR)**. In addition, an incident review team will be assigned to review the case and determine the causes and any needed actions. See PUB-3000, Chapter 5, Section 5.1, for additional information.

Biological materials of concern related to exposures include materials or animals that may contain agents or properties that have known, potential, or unknown health risks. Examples of materials include all recombinant genomic materials, viable biological microbes in research, or Risk Group 2 or higher agents or materials. Examples of worker exposures to such biological materials of concern include:

- Biological materials in contact with mucous membranes such as eyes, nose, or mouth.
- Biological materials in contact with an open area of skin (e.g., cut or abrasion).
- Cuts or punctures with sharp objects that may be contaminated with biological materials.
- Exposures to humans or animals in research in a manner that is known to transmit disease.
- Exposure to the blood of other people.

Additional information on biosafety-related accidents, response, and reporting is contained in the applicable BUA or ECP (see Section 5.1).

5.10.3 Biological Spills and Cleanup

Supervisors, work leads, and PIs are responsible for ensuring that spill response procedures and materials needed to safely respond to potential biological spills are maintained in operations where biological materials are used.

The *Emergency Response Guide*, which must be posted in work areas, provides guidance and materials needed to safely respond to and clean up most biological spills at LBNL. Additional guidance regarding a variety of biohazardous spills inside and outside of biosafety cabinets is provided in Appendix G. Any additional guidance or materials needed to safely respond to or clean up biological spills must be included in the operation's Biosafety Work Authorization (see Section 5.1).

Response to biological spills should be conducted in accordance with applicable guidelines or requirements contained in the "Biological Spill" section of the *Emergency Response Guide*, Appendix G of this manual, and the operation's Biosafety Work Authorization.

5.10.4 Additional Biosafety Incident Reporting

Line management, the Biosafety Officer, the Responsible Official, Waste Management, the IBC, and other LBNL employees have various internal and regulatory responsibilities for reporting biosafety-related incidents. The following incidents must be reported to the Biosafety Officer in the EH&S Division:

- Worker exposure to biological materials of concern (see Section 5.10.2).
- Injuries or illnesses involving or resulting from exposure to biological materials (see Section 5.10.2).
- Release occurring outside of secondary biosafety containment of medical/biohazardous waste, biohazardous materials, recombinant genomic materials, or other regulated biological materials that have not been inactivated.
- Incidents related to select agents or toxins (see definitions in Section 3.3.2.5).
- Biosafety-related regulatory inspections or findings.

Release outside of secondary containment includes, for example:

- Spill of a material outside of its laboratory facility and outside of its primary and secondary containers.
- Medical/biohazardous waste that has not been decontaminated but is disposed of in a sanitary sewer or in trash outside the laboratory where the work is conducted.
- Environmental release of a viable agent, animal, plant, or pest material that is regulated against release or may cause damage to humans, plants, animals, or the environment.

5.11 Procurement, Transportation, and Transfer

5.11.1 Procurement

Procurement of biological agents, biological toxins, and other selected laboratory equipment or supplies are controlled at LBNL using a graded approach through the procurement process. These controls are designed to screen for biosafety and other hazards. They also provide a means for EH&S to assist requestors in implementing biosafety controls or complying with regulations. The following LBNL procurement controls are related to biosafety:

- Expenditures for goods and services must be performed in accordance with LBNL procurement policies and through the Procurement and Property Management Department.
- Only personnel authorized by the Chief Financial Officer or the Procurement and Property Manager may commit the Laboratory to goods or services. These authorized personnel categorize items to be procured so that assigned EH&S personnel will be notified of the procurement.
- EH&S personnel notification or pre-approval for EH&S-related items that are on the restricted items list. EH&S personnel are notified of items such as, but not limited to, biological agents, biosafety cabinets, hoods, HEPA filters, chemicals, gases, eyewashes, safety showers, respirators, dust masks, and laboratory refrigerators. Items specific to biosafety that are on the restricted items list include:
  - Biological agents – The LBNL Biosafety Officer is sent a notification e-mail that procurement of a biological agent has been initiated, and the Biosafety Officer contacts the requestor if needed.
  - Select agents and toxins – Only individuals in LBNL Procurement may purchase select agents or toxins (see Section 3.3.2.5 and Appendix B, Section B.2, of this manual) with approval from the Biosafety Officer.
  - Biosafety cabinets – Selected EH&S Industrial Hygienists are e-mailed a notification that procurement of a BSC has been initiated, and the hygienist contacts the requestor as needed.

5.11.2 Transportation and Shipping

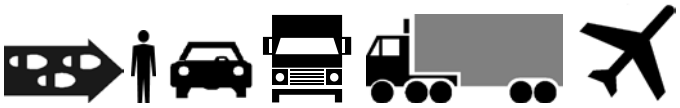

Employees who wish to transport or ship a biological material must ensure the material is moved safely and in accordance with LBNL biosafety transportation and shipping policy detailed in Appendix H of this manual. Appendix H should be used to assess if the material is a regulated biological material and how it should be moved. LBNL's policy for workers handling materials at LBNL is based on biosafety requirements and U.S. and international transportation and shipping regulations. A number of biological materials may be transported directly by LBNL researchers in accordance with LBNL requirements, but all biological materials shipped by a contracted shipping company (e.g., a common carrier such as FedEx or UPS must be moved through LBNL Receiving, Transportation, and Shipping. See Appendix H for additional information.

5.11.3 Import, Export, and Transfer Restrictions Borders

Materials being transferred (i.e., imported, exported, or transferred) from one location or person to another may be subject to regulatory restrictions or permit requirements. U.S., state, and foreign government agencies restrict and permit the movement of certain biological materials across borders to prevent threats to public health, agriculture, environment, and national security.

The supervisor, work lead, person transferring the biological material, person requesting transfer of the biological material, and permit holder all have LBNL or legal responsibilities for complying with transfer requirements, obtaining any required permits, and following the conditions of the permit. Regulatory requirements, permits, and permit conditions related to the transfer of biological materials should also be included in the Biosafety Work Authorization. The LBNL Biosafety Office and IBC will review the researcher's assessment and documentation of transfer requirements during the work authorization review process.

Appendix I of this manual provides an outline of U.S.-based regulatory restrictions, permits, and lists related to the transfer (i.e., import, export, or transfer) of biological and related materials. Appendix I may be used by LBNL personnel as a starting point for determining whether biological materials are potentially regulated by U.S. agencies. It may also be used to determine whether there are restrictions or permits applicable to transfer of the material. Contact the LBNL Biosafety Office for additional advice.

General controls for exporting from LBNL are outlined in the *Berkeley Lab Export Control Manual*. Export controls are based on government rules and regulations that govern the transfer of the following items to non-U.S. entities or individuals, regardless of where or how the transfer takes place:

- Goods (systems, components, equipment, or materials)
- Technologies (technical data, information, or assistance)
- Software/codes (commercial or custom)

6.0 Assessment and Improvement

The fifth core function of Integrated Safety Management (ISM) requires that feedback and continuous improvement are incorporated into the work cycle for activities that involve work with biological materials or exposure to biological materials. This function is accomplished when supervisors, work leads, principal investigators (PIs), line management, Environment, Health, and Safety (EH&S), and others assess and continuously improve the biosafety of work conducted at LBNL.

See PUB-3000, Chapter 26, Section 26.9, for a description of how LBNL assessment and improvement processes are incorporated into work with biological materials and the Biosafety Program. The bulleted paragraphs below provide an overview of assessment and improvement processes and resources for supervisors, work leads, and PIs.

Supervisors, work leads, and PIs must:

- Conduct periodic Environment, Safety, and Health (ES&H) assessments of their operation as specified in the Division Self-Assessment Program, including assessment of the safety of tasks being performed, safety of the work area and equipment, training, and compliance with the Biosafety Work Authorization and standards.
- Participate in periodic biosafety assessments or other ES&H Technical Assurance Program (TAP) assessments of their operation when scheduled by EH&S.
- Continuously improve the biosafety of their work, including correcting deficiencies and tracking actions in the Corrective Action Tracking System (CATS) when required.
- Update their Biosafety Work Authorization with changes in personnel, training requirements, locations, and significant changes in the work.

Supervisors, work leads, and PIs may use the following key resources to assess the biosafety and compliance of their operations:

- The Biosafety Work Authorization for the operation.
- The training requirements and tracking feature for personnel listed on the work authorization in the Biosafety Authorization System (BAS).
- Laboratory Biosafety Level (BL) 1 and BL2 criteria listed in Appendix C of this manual.

7.0 Standards, Policies, References, and Resources

7.1 Standards

- 7 CFR 331 and 9 CFR 121, *Possession, Use, and Transfer of Biological Agents and Toxins*, U.S. Department of Agriculture (USDA), Animal and Plant Health Inspection Service (APHIS)
- 7 CFR 330, *Plant Pest Regulations; General; Plant Pests; Soil, Stone, and Quarry Products; Garbage*. Importation of Plant Pests, USDA/APHIS
- 9 CFR Parts 92, 94, 95 96, 122 and 130 (note especially Part 122, *Organisms and Vectors*). Importation of Etiologic Agents of Livestock, Poultry, and Other Animal Diseases; USDA/APHIS
- 10 CFR 851, *Worker Safety and Health Program*, Department of Energy (DOE)
- 29 CFR 1904.8**,** Recording criteria for needle stick and sharps injuries, Occupational Safety and Health Administration (OSHA)
- 29 CFR 1910.1030, *Bloodborne Pathogens*, OSHA
- 42 CFR 71, Foreign Quarantine, Part 71.54 Etiologic agents, hosts, and vectors; Importation of Etiological Agents of Human Disease and Other Materials That May Contain These Agents; United States **Public Health Service (PHS)**
- 42 CFR 73, *Select Agents and Toxins*, Department of Health and Human Services (HHS)
- 49 CFR 171.8 (Definitions), 173.134 (Infectious Substances), and 173.6 (Materials of Trade), ***Hazardous Material Regulations* (HMR)**, U.S. **Department of Transportation (DOT)**
- *Biosafety in Microbiological and Biomedical Laboratories*, fifth edition, Centers for Disease Control (CDC) and National Institutes of Health (NIH)
- California Health and Safety Code, Sections 117600 - 118360, California Medical Waste Management Act
- *Guidelines for Research Involving Recombinant DNA Molecules*, National Institutes of Health (NIH), Federal Register (current version)

- *Laboratory Biosafety Manual*, 2nd ed. (revised), Interim Guidelines, World Health Organization (WHO), Geneva 2003, as applicable to biological etiologic agents
- OSHA Standard Interpretation on Applicability of 1910.1030 to Establish Human Cell Lines

7.2 Policies

7.2.1 *Health and Safety Manual* (PUB-3000) Chapters

- *General Policy and Responsibilities* (Chapter 1)
- *Health Services* (Chapter 3)
- *Industrial Hygiene* (Chapter 4)
- *Transportation (Chapter 5)*
- *Safe Work Authorizations* (Chapter 6)
- *Emergency Management* (Chapter 9)
- *Personal Protective Equipment* (Chapter 19)
- *Hazardous Waste Disposal* (Chapter 20)
- *Research with Human and Animal Subjects* (Chapter 22)
- *Environment, Health, and Safety (EH&S) Training* (Chapter 24)
- *Biosafety* (Chapter 26)

7.2.2 Other Biosafety-related LBNL Publications

- *Berkeley Lab Export Control Manual*
- *Biosafety, Security, and Incident Response Plan for Select Agents*, LBNL, latest version.
- PUB-5341, *Chemical Hygiene and Safety Plan*, LBNL, latest version
- PUB-533, *Master Emergency Program Plan for Lawrence Berkeley National Laboratory*, LBNL, latest version
- PUB-3140, *Integrated Environment, Health & Safety Management Plan,* LBNL, latest version
- PUB-3095, *Medical and Biohazardous Waste Generator Guidelines*, LBNL, latest revision
- *Site Safeguards and Security Plan*, LBNL, latest version (a controlled document)
- Site Security Plan for the Lawrence Berkeley National Laboratory

7.3 References

- *Emergency Response Guide* (wall posting) and EH&S Emergency Preparedness Web page, LBNL
- Facility Safety Plan Requirements, United States Army Medical Research and Materiel Command (USAMRMC) Web site
- *How to Import Foreign Soil and How to Move Soil within the United States*, Circular Q-330.300-1 Soil (10/2006), USDA/APHIS, Plant Protection and Quarantine (PPQ)
- National Sanitation Foundation (NSF)/ American National Standard (ANSI) *Standard 49: Class II (laminar flow) biosafety cabinetry*, March 19, 2002

7.4 Resources

- LBNL EH&S groups, contact information, and Web links that may assist with biosafety-related matters are listed in Section 1.6 of this manual.
- American Biological Safety Association (ABSA)
- Canadian Fact Sheets: The Health Protection Branch of the Laboratory Centre for Disease Control in Ottawa, Canada, has developed fact sheets for many microorganisms that are similar to a chemical material safety data sheet.

Appendix A

Glossary

Terms, acronyms, and abbreviations used in this manual are defined in this appendix.

Adeno-associated virus (AAV) is a virus that infects humans and some other primate species. AAV is a very attractive candidate for creating viral vectors because it is not known to cause disease in humans, can infect both dividing and nondividing cells, and may incorporate its genome into that of the host cell.

American Biological Safety Association (ABSA) is a professional association that promotes biosafety as a scientific discipline and serves the growing needs of biosafety professionals throughout the world.

Animal and Plant Health Inspection Service (APHIS) is an agency of the U.S. Department of Agriculture (USDA) that is responsible for protecting and promoting U.S. agricultural health, administering the Animal Welfare Act, and carrying out wildlife damage management activities.

Animal Biosafety Level (BL-N) is standard containment and confinement practice for research involving whole animals when 1) recombinant research involves larger animals (e.g., nonhuman primates), 2) animals are infected with human pathogens, or 3) animals may harbor zoonotic agents (see this manual for details).

Animal Welfare and Research Committee (AWRC) is an LBNL committee that reviews and approves proposed LBNL research for animal welfare concerns. Federal law uses the term Institutional Animal Care and Use Committee (IACUC).

Antimicrobial is a chemical or physical agent that is used in the decontamination process to prevent microbial growth.

Antisepsis is the application of a liquid antimicrobial chemical to human or animal living tissue to prevent sepsis.

Antiseptic is a disinfecting chemical agent that is applied to living tissue and used to prevent sepsis.

Australia Group (AG) is an informal forum of countries that, through the harmonization of export controls, seeks to ensure that exports do not contribute to the development of chemical or biological weapons.

Autoclave is a piece of equipment with a chamber that is used to sterilize items by applying wet heat (i.e., high-pressure steam) at temperatures above the normal boiling point of water and pressures above normal atmospheric pressure.

Biohazard is a biological material or condition that presents potential detrimental risk to the health of humans or other organisms, either directly through infection or indirectly through damage to the environment.

Biohazard label is a sign that is predominately fluorescent orange or orange-red and contains a biohazard symbol and the word “Biohazard” in a contrasting color.

Biohazardous is an adjective used to describe biological materials that present potential detrimental risk to the health of humans or other organisms, either directly through infection or indirectly through damage to the environment.

Biohazardous waste is waste that requires inactivation (i.e., decontamination) in an approved manner prior to disposal, but is not regulated by the California Department of Health Services as regulated medical waste. See PUB-3095, *Medical and Biohazardous Waste Generator Guidelines,* for additional information.

Biological agent or **agent** is a very specific biological organism or material that is often directly responsible for producing an effect (e.g., disease). Agent examples include a microorganism (e.g., bacterium, fungus, or parasite), virus, prion, or biological toxin.

Biological etiologic agent is an agent of biological origin (e.g., bacterium, fungus, parasite, virus, etc.) that causes disease in humans (i.e., pathogenic to humans).

Biological materials are a broad range of organisms, cells, viruses, and other materials of biological origin that pose differing levels of risks to plants, animals, or humans.

Biological products are materials that are regulated by Department of Transportation (DOT) and International Air Transport Association (IATA) for shipping that are derived from living organisms and manufactured for use in the prevention, diagnosis, treatment, or cure of disease in humans or animals and are certified by the USDA, Food and Drug Administration (FDA), or other national authority. Examples of biological products include certain viruses, therapeutic serums, toxins, antitoxins, vaccines, blood, and blood products.

Biological toxin, **biotoxin**, or **toxin**. See toxin.

Biological Use Application is the form completed by a prinicipal investigator (PI) or supervisor and submitted to the Environment, Health, and Safety (EH&S) biosafety office for review, approval, and authorization by a Biosafety Officer, the Institutional Biosafety Committee (IBC), or line management. Authorized applications result in a Biological Use Authorization (BUA), Biological Use Registration (BUR), or Biological Use Notification (BUN).

Biological Use Authorization (BUA) is a type of LBNL formal biosafety authorization for work involving Risk Group (RG) 2 or higher biological materials, Biosafety Level (BL) 2 used for safety, or a regulatory permit or registration.

Biological Use Notification (BUN) is a type of LBNL biosafety authorization for work involving RG1 biological materials, including work with National Institutes of Health (NIH)-exempt recombinant DNA molecules.

Biological Use Registration (BUR) is a type of LBNL biosafety authorization for work involving RG1 work with recombinant DNA molecules and organisms or viruses containing recombinant DNA molecules.

Biological Weapons Convention (BWC) is a multilateral disarmament treaty that prohibits the development, production, acquisition, transfer, retention, stockpiling, and use of biological and toxin weapons and is a key element in the international community's efforts to address the proliferation of weapons of mass destruction.

Biosafety or **biological safety** is the general administrative and physical safety measures and efforts employed in a certain environment (e.g., LBNL) to protect workers, the public, agriculture, and the environment from exposure to biological agents or materials that may cause disease or other detrimental effects in humans, plants, or animals.

Biosafety Authorization System (BAS) is the LBNL online system used to manage and provide BUNs, BURs, BUAs, and related information.

Biosafety cabinet or **biological safety cabinet (BSC)** is a hood with high-efficiency particulate air (HEPA) filters that provides personnel, environmental, and/or product protection when appropriate practices and procedures are followed.

Biosafety in Microbiological and Biomedical Laboratories (BMBL) is the title of an NIH-Centers for Disease Control and Prevention (CDC) national code of practice and LBNL standard for biosafety that outlines and defines biosafety risk assessment and control.

Biosafety Level (BL) is a standard combination of practices and techniques, safety equipment, and facilities to safely contain biohazardous materials or agents to be used in work, as specified by BMBL and the *NIH Guidelines*. The *NIH Guidelines* uses the acronym BL, and BMBL uses the acronym BSL. The term biosafety level and acronym BL may be used generally to apply to any work with biological materials, but the acronym BL when used without additional letters or words technically applies only to laboratory BLs. When other letters or words are added to the BL acronym, other containment categories are indicated (e.g., BL-Large Scale, BL-P for plants, and BL-N for animals).

Biosafety Manual is a comprehensive LBNL policy and tool developed that covers fundamental principles of biosafety, integrates requirements from the biosafety standards, and provides direction on identifying biological risks and required controls.

Biosafety Officer is a person in the EH&S Division that oversees the development and maintenance of the primary structure and function of the Biosafety Program in accordance with the biosafety standards.

Biosafety Work Authorization is a BUA, BUR, BUN, or Exposure Control Plan (ECP).

Biosecurity is the administrative and physical security measures used to protect higher-consequence microbial agents or toxins and related information from loss, theft, diversion, or intentional misuse.

Biotechnology Regulatory Services (BRS) is a branch of APHIS that regulates the introduction (importation, interstate movement, or environmental release) of certain genetically engineered organisms that may pose a plant pest risk, including organisms that are plants, insects, or microbes.

Blood as used in the Occupational Safety and Health Administration (OSHA) Bloodborne Pathogens Standard means human blood, human blood components, and products made from human blood.

Bloodborne pathogen (BBP) material is a term used at LBNL to describe biological agents or materials that are covered by the OSHA Bloodborne Pathogens Standard including, for example, bloodborne pathogens, human blood, human blood components, products made from human blood, and other potentially infectious materials (OPIM).

Bloodborne pathogens (BBPs) are infectious agents such as the human immunodeficiency virus (HIV) and the hepatitis B virus (HBV) that are capable of causing human disease and are transmitted through human blood.

Bovine spongiform encephalopathy (BSE) is a fatal neurodegenerative disease in cattle caused by a prion infection. BSE causes the animal's brain and spinal cord to degenerate, and is characterized by the spongy appearance of infected brain tissue. BSE—also known as mad cow disease—is a type of transmissible spongiform encephalopathy. Humans who ingest brain or spinal cord tissue from infected cattle carcasses may develop a TSE known as new variant or variant Creutzfeldt-Jakob disease (nvCJD or vCJD).

Bureau of Industry and Security (**BIS**) is an agency of the U.S. Department of Commerce that deals with issues involving national security and high technology. The BIS is responsible for implementing and enforcing the Export Administration Regulations (EAR) and has a principal goal of stopping proliferation of weapons of mass destruction, while furthering the growth of U.S. exports.

California Department of Food and Agriculture (CDFA) is an agency in the California state government that is responsible for ensuring the state's food safety, the protection of the state's agriculture from invasive species, and promoting the state's agricultural industry.

Category A Infectious Substances see Infectious Substances, Category A.

Category B Infectious Substances see Infectious Substances, Category B.

Center for Veterinary Biologics (CVB) is a group within APHIS Veterinary Services (VS) that regulates veterinary biologics including vaccines, antibodies, diagnostic kits, and certain immunomodulators, including those developed using genetically engineered organisms.

Centers for Disease Control and Prevention (CDC) is one of the 13 major operating components of the U.S. Department of Health and Human Services.

Chemical Safety Hygiene Plan (CHSP) is a comprehensive LBNL policy and tool that provides requirements and guidance to employees on the safe handling, use, and storage of hazardous materials such as chemicals and engineered nanomaterials in laboratory, shop, and office settings.

Commerce Control List (CCL) is a section of the EAR that lists specific goods, technologies, and software and the countries to which those items may or may not be exported, along with any special restrictions or exceptions that may apply.

Common carrier is a person or company that transports goods or people for any person or company and that is responsible for any possible loss of the goods during transport (e.g., FedEx or UPS).

Containment is a set of controls including the safe methods, equipment, and facilities needed to protect workers and the environment from biohazardous materials or agents.

Contaminated means the potential presence of biohazardous material on an item or surface. The OSHA Bloodborne Pathogens Standard defines contaminated as the presence or the reasonably anticipated presence of blood or other potentially infectious materials on an item or surface.

Corrective Action Tracking System (CATS) is an online LBNL database tool used to identify, track, and resolve issues and their associated corrective actions as well as determine the effectiveness of those corrective actions.

Creutzfeldt-Jakob disease (CJD) is an incurable neurodegenerative and fatal human disease caused by a prion infection. CJD causes brain nerve cells to degenerate and is characterized by the spongy appearance of infected brain tissue. Although CJD is rare, it is the most common type of transmissible spongiform encephalopathy in humans. Three major categories of CJD are sporadic CJD, hereditary CJD, and acquired CJD.

Customs and Border Protection (CBP) or United States Customs and Border Protection is a federal law enforcement agency of the U.S. Department of Homeland Security charged with regulating and facilitating international trade, collecting import duties, and enforcing U.S. regulations including trade (e.g., import and export), drug, and immigration.

Dangerous Goods Regulations (DGR) is a manual published by IATA to provide procedures for shippers and operators by which articles and substances with hazardous properties can be safely and efficiently transported by air on all commercial air transport. The manual provides lists and classifications of articles and substances (e.g., infectious substances) and requirements for training, packing, labeling, documentation, handling, and reporting.

Decontamination is the process of reducing or inactivating biological contaminants or components to an acceptable level to reduce or eliminate the possibility of transmission of pathogens to undesired hosts such as laboratory workers, the general public, and other organisms in the environment.

Deoxyribonucleic acid (**DNA**) is a nucleic acid that contains the genetic instructions used in the development and functioning of all known living organisms and some viruses.

Department of Energy (DOE) is a Cabinet-level department of the U.S. government concerned with the U.S. policies regarding energy and safety in handling nuclear material. DOE also sponsors basic and applied scientific research mostly through its system of U.S. DOE national laboratories such as LBNL.

Department of Transportation (DOT) is a federal Cabinet-level department of the U.S. government that is concerned with interstate transportation to keep the traveling public safe and secure, increase their mobility, and have a transportation system that contributes to the nation's economic growth.

Detergent is a synthetic surfactant.

Disease is any deviation from or interruption of the normal structure or function of any body part, organ, or system that is manifested by a characteristic set of symptoms and signs and whose etiology, pathology, and prognosis may be known or unknown.

Disinfectant is a chemical germicide or physical agent that is applied to inanimate objects to kill microbes, but is not capable of killing endospores, some viruses, or mycobacterium. Disinfectants are typically chemical germicides.

Disinfection is the process of generally eliminating nearly all recognized pathogenic microorganisms but not necessarily all microbial forms (e.g., bacterial spores) from inanimate objects (e.g., work surfaces, equipment). Common disinfectants include diluted household bleach or 70% isopropanol.

Dust mask is a common, but inaccurate name for a filtering facepiece respirator.

Emergency eyewash is a plumbing unit designed to properly flush chemical, biological, or other hazardous agents off the face, and out of mucous membranes such as the eyes, so as to prevent injury to the eye and exposed body surfaces or penetration of an agent into the body.

Emergency eyewash and shower is a combined plumbing unit(s) designed to properly flush chemical, biological, or other hazardous agents off of the skin or the face, and out of mucous membranes such as the eyes, so as to prevent injury to the exposed body surfaces or penetration of an agent into the body.

Emergency Response Guide is an online LBNL guide and wall-mountable flip chart that covers worker instructions and telephone numbers for reporting incidents and general emergency response for a variety of common emergencies including biological spills and personal injury.

Environment, Health, and Safety (EH&S) Division at LBNL manages environment, safety, and health programs to ensure LBNL fulfills their requirements.

Environment, Safety, and Health (ES&H) is a term used to describe subjects (e.g., policies, responsibilities, and functions) related to protecting the safety and health of workers, the public, and the environment.

Environmental Protection Agency (EPA) is an agency of the U.S. government charged to protect human health and the environment and has primary responsibility for setting and enforcing national standards under a variety of environmental laws. The EPA also conducts environmental assessment, research, and education and works with industry and government in voluntary pollution prevention and energy conservation efforts.

ES&H Technical Assurance Program (TAP) is one component of the LBNL Self-Assessment Program that is managed by the EH&S Division. The ES&H Biosafety Program TAP reviews biosafety programs and processes Laboratory-wide to ensure they are compliant with guiding regulations, effective, and properly implemented by Laboratory divisions.

Etiologic is an adjective that means disease-causing.

Export Administration Regulations (EAR) are regulations that contain the CCL, are issued by the U.S. Department of Commerce BIS under laws relating to the control of certain exports, reexports, and activities, and contain the CCL.

Exposure Control Plan (ECP) is an LBNL authorization document that defines work, hazards, and controls in accordance with the requirements of the OSHA Bloodborne Pathogens Standard for work with or potential exposure to BBP materials. The BUA is the ECP for work that pertains to research.

Eye protection is a safety device such as safety glasses or goggles worn over the eyes to prevent injury to the eye or exposure to biological agents.

Face mask is a loose-fitting, disposable device that covers the worker's nose and mouth and is not a respirator (e.g., products labeled as surgical, medical, dental, or isolation masks).

Face protection is a safety device such as a face mask, face shield, or other splatter guard worn over all or part of the face to protect the face from injury or exposure to biological agents.

Filtering facepiece respirator is a negative-pressure, air-purifying respirator with a particulate filter as an integral part of the facepiece or with the entire facepiece composed of the filtering medium. A filtering facepiece respirator is sometimes poorly referred to as a "dust mask" or improperly called a "N95 respirator."

Fixed means the biological material has been treated so that it has been stabilized and preserved in place. Fixing cells with some fixatives (e.g., paraformaldehyde or glutaraldehyde) kills the cells and most potential pathogens.

Food and Drug Administration (FDA) is an agency of the U.S. Health and Human Services Department responsible for protecting and promoting public health through the regulation of food safety, tobacco products, dietary supplements, medications, vaccines, biopharmaceuticals, blood transfusions, medical devices, electromagnetic radiation emitting devices, veterinary products, cosmetics, and other concerns.

Foot protection is an enclosed shoe or safety shoe worn on the foot to protect the foot from injury or exposure to biological agents.

Genetic material is material found in the nucleus, mitochondria, and cytoplasm of a cell or organism. It plays a fundamental role in determining the structure and nature of cell substances and is capable of self-propagating and variation. The genetic material of a cell can be a gene, a part of a gene, a group of genes, a DNA molecule, a fragment of DNA, a group of DNA molecules, or the entire genome of an organism.

Genetic recombination is the process by which the strand of genetic material (usually DNA, but can also be RNA) is broken and then joined to a different DNA molecule to create recombinant genetic material.

Genetically Modified Organisms (GMO) or microorganisms (GMMO) are organisms and microorganisms that are regulated by DOT and IATA for shipping in which genetic material has been purposely altered through genetic engineering in a way that does not occur naturally.

Germicide is an antimicrobial substance or physical agent that kills microbes.

Good Microbiological Practice (GMP) refers to aseptic techniques and other good microbiological practices that are necessary to prevent contamination of the laboratory with the agents being handled and contamination of the work with agents from the environment.

Greenhouse is a structure with walls, a roof, and a floor designed and used principally for growing plants in a controlled and protected environment.

Greenhouse facility includes the actual greenhouse rooms or compartments for growing plants and all immediately contiguous hallways and head-house (i.e., work) areas, and is considered part of the confinement area.

Guidelines are a set nonmandatory but desirable criteria, conditions, or best management practices that should typically be considered when determining controls needed to mitigate risk.

Hand protection is a glove or other safety device used on the hand to prevent injury to the hand or direct skin contact with biological materials.

Handwashing facility is a facility that is required when work with BBP materials is conducted. It has an adequate supply of running potable water, soap, and single-use towels or hot-air-drying machines.

Handwashing sink is basin with running water and a drain that is designed for washing of hands and that should be provided with a soap dispenser and paper towel dispenser as a best management practice.

Hazardous Material Regulations (HMR) are DOT regulations that govern the movement of hazardous materials (e.g., infectious substances) in vehicles, airplanes, railcars, or vessels via public right-of-ways such as roadways, airways, railways, and sea lanes that are accessible to the public.

Health and Human Services (HHS) is a Cabinet department of the U.S. government that contains the U.S. Public Health Service and has the goal of protecting the health of all Americans and providing essential human services.

Hepatitis B virus (HBV) is a pathogen that causes contagious liver disease (i.e., hepatitis B) in humans. HBV is a common BBP.

Hepatitis C virus (HCV) is a pathogen that causes contagiouis liver disease (i.e., hepatitis C) in humans. HCV is a common BBP.

High-efficiency particulate air (HEPA) filter is a device composed of fibrous materials capable of trapping and retaining at least 99.97% of airborne monodispersed particles 0.3 micrometers (µm) in diameter.

Hood is an enclosure or shaped inlet designed to conduct contaminated air into an exhaust duct system or a filter that safely captures the contaminant.

Household bleach is a water-based solution of sodium hypochlorite with a typical concentration of 5.25% by weight of the active sodium hypochlorite ingredient.

Human immunodeficiency virus (HIV) is a lentivirus (a member of the retrovirus family) that causes acquired immunodeficiency syndrome (AIDS), a condition in humans in which the immune system begins to fail, leading to life-threatening opportunistic infections. HIV is a common BBP.

Human pathogen or infectious agent is an infectious microbe (e.g., bacteria, protozoa, fungi, viruses, etc.) or other agent (e.g., prions) that causes disease in healthy humans.

Human Subjects Committee (HSC) is an LBNL committee that reviews proposed research projects involving human subjects, human-derived data, or human-derived tissues, for ethical concerns in accordance with HHS regulations and DOE Orders.

Inactive means the biological material is not capable of acting or reacting normally.

Infectious agent or human pathogen is an infectious microbial (e.g., bacteria, protozoa, fungi, viruses, etc.) or other agent (e.g., prions) that causes disease in healthy humans.

Infectious substances are materials regulated by DOT and IATA for shipping that are known to be, or are reasonably suspected to contain, an animal or human pathogen. A pathogen is a virus, microorganism (including bacteria, plasmids, or other genetic elements), proteinaceous infectious particle (prion), or recombinant microorganism (hybrid or mutant) that is known or reasonably expected to cause disease in humans or animals.

Infectious substances, Category A, are materials regulated for shipping by DOT and IATA that are capable of causing permanent disability, or life threatening or fatal disease in humans or animals when exposure to them occurs.

Infectious substances, Category B are materials regulated for shipping by DOT and IATA that are infectious, but do not meet the standard for inclusion in Category A.

Institutional Biosafety Committee (IBC) is an LBNL committee that provides oversight, administration, and review of LBNL policies and projects involving research with biological materials that may pose safety, health, or environmental risks.

Institutional Review Board (IRB) is an HHS-mandated committee that requires the use of established principles and requirements during the ethical review of proposed research projects involving human subjects, human-derived data, or human-derived tissues. The IRB for LBNL is the HSC.

Integrated Pest Management (IPM) is a term used in the BMBL and LBNL biosafety policy to describe a comprehensive program approach that integrates housekeeping, maintenance, and pest control services to prevent pest problems by managing the facility environment to make it less conducive to pest infestation.

Integrated Safety Management (ISM) is the safety management system used by LBNL and the U.S. Department of Energy to systematically integrate safety into management and work practices at all levels so that missions are accomplished while protecting the public, the worker, and the environment.

International Air Transport Association (IATA) is an international industry trade group of airlines that represents, leads, and serves the airline industry and publishes the DGR used for airlines' shipping of articles and substances with hazardous properties including infectious substances.

International Traffic in Arms Regulations (ITAR) is a set of U.S. Department of State regulations that control the export and import of defense-related articles and services on the United States Munitions List (USML).

Iodophor is a preparation containing iodine complexed with a solubilizing agent, such as a surfactant or povidone (a type of water soluble polyvinyl polymer).

Ionizing radiation is radiation of sufficiently high energy to cause ionization in the medium through which it passes.

Job Hazards Analysis (JHA) is the LBNL process that results in a worker hazard and control description (Hazards Profile) and Work Authorization prepared for a specific worker according to the requirements of PUB-3000, Chapter 32.

Laboratory acquired infections (LAIs) are all infections acquired through laboratory or laboratory-related activities regardless of whether they are symptomatic or asymptomatic in nature.

Laboratory Biosafety Level (BL) is a standard combination of practices and techniques, safety equipment, and facilities to safely contain biohazardous materials or agents used in laboratory work.

Large Scale (BL–Large Scale) is a term used in the *NIH Guidelines* and LBNL biosafety policy to describe uses of and containment levels for organisms containing recombinant DNA molecules involving a quantity of culture greater than 10 liters.

Lawrence Berkeley National Laboratory (LBNL), which is also called Berkeley Lab, is a DOE national laboratory that conducts unclassified, interdisciplinary scientific research.

Medical waste is waste generated or produced as a result of the following: diagnosis, treatment, or immunization of human beings or animals; research pertaining to the diagnosis, treatment, or immunization of human beings or animals; or the production or testing of biologicals. See PUB-3095, *Medical and Biohazardous Waste Generator Guidelines,* for additional information.

Medical/biohazardous waste is a term used to describe wastes that are biological materials or contaminated with biological materials and require inactivation (i.e., decontamination) in an approved manner prior to final disposal.

Must means the condition is required.

N95 respirator is a term sometimes improperly used to describe a filtering facepiece respirator that has a 95% efficient filter built into the facepiece.

National Center for Import Export (NCIE) is a group within APHIS VS that regulates the import, export, and interstate movement of all animals and animal products (e.g., tissues, blood, and semen), including those that are genetically engineered.

National Institutes of Health (NIH) is one of eight health agencies that are components of the Public Health Service (PHS).

National Select Agent Registry (NSAR) is a cooperative program between the USDA-APHIS Agricultural Select Agent Program and the CDC Division of Select Agents and Toxins to oversee activities involving the possession of biological agents and toxins that have the potential to pose a severe threat to public health, animal or plant health, or to animal or plant products.

Negative-pressure, air-purifying, cartridge respirator is a respirator that uses a filter, sorbent, or catalyst housed inside a cartridge to remove contaminants from the air (e.g., respirators using a N95 or P100 cartridge particulate filter that is 95% or 100% efficient, respectively).

Negative-pressure, air-purifying respirator is a tight-fitting respirator in which the air pressure inside the facepiece is negative during inhalation with respect to the ambient air pressure outside the respirator and an air-purifying filter or cartridge removes specific air contaminants (e.g., filtering facepiece and some cartridge respirators).

NIH Guidelines is an abbreviated title used by NIH for the document titled *NIH Guidelines for Research Involving Recombinant DNA Molecules*.

Nonviable means the biological material or agent is not capable of living or developing under favorable conditions.

Nucleic acid is a macromolecule composed of chains of monomeric nucleotides. In biochemistry, nucleic acids carry genetic information or form structures within cells. The most common nucleic acids are DNA and RNA.

Occupational Safety and Health Administration (OSHA) is an agency of the U.S. government that ensures the safety and health of U.S. workers (e.g., by setting and enforcing standards).

Occurrence Reporting and Processing System (ORPS) is an LBNL system that is used to notify and keep Laboratory management and applicable elements of the U.S. Department of Energy (DOE) informed of abnormal occurrences that could adversely affect 1) the health and safety of employees, guests, visitors, and the general public; 2) the environment; 3) the intended purpose of LBNL facilities; or 4) the credibility of DOE and/or LBNL.

Office of Laboratory Animal Welfare (OLAW) is an office of NIH that oversees compliance with the PHS Policy on Humane Care and Use of Laboratory Animals.

Organism is any living system (such as animal, plant, fungus, or microorganism). In at least some form, all organisms are capable of response to stimuli, reproduction, growth and development, and maintenance of homeostasis as a stable whole. An organism may either be unicellular (single-celled) or composed of, as in humans, many billions of cells grouped into specialized tissues and organs. The term **multicellular** (many-celled) describes any organism made up of more than one cell.

Other Potentially Infectious Materials (OPIM) are materials other than blood and bloodborne pathogens that are regulated by the OSHA Bloodborne Pathogens Standard based on their potential to contain BBPs. See Table 5 of this manual and definitions for **blood** and **bloodborne pathogens**.

Parenteral is an adjective that refers to a route of administration that involves piercing the mucous membranes or skin barrier through events such as punctures, lacerations, abrasions, and bites.

Pathogen is an infectious microbe (e.g., bacteria, protozoa, fungi, viruses, etc.) or other agent that causes disease in healthy host organisms such as humans, animals, or plants.

Patient specimens or **diagnostic specimens** are any human or animal materials including but not limited to excreta, secreta, blood, blood components, tissue, and tissue fluids being shipped for the purpose of diagnosis and regulated by DOT and IATA.

Personal Protective Equipment (PPE) is clothing or equipment worn by workers to protect the body from injury by hazardous agents or materials. Examples of PPE include foot, hand, eye, face, body, and respiratory protection. PPE is one element of biosafety containment.

Plant Biosafety Level (BL-P) is standard physical and biological containment conditions and practices suitable to greenhouse operations that conduct experiments involving plants, plant-associated microorganisms, and small animals (e.g., arthropods or nematodes).

Plant Protection and Quarantine (PPQ) is a branch of APHIS that safeguards agriculture and natural resources from the risks associated with the entry, establishment, or spread of animal and plant pests and noxious weeds to ensure an abundant, high-quality, and varied food supply.

Plasmids are DNA segments that are separate from chromosomal DNA and are capable of replicating independently of the chromosomal DNA. In many cases, a plasmid is circular and double-stranded. Plasmids usually occur naturally in bacteria, but are sometimes found in eukaryotic organisms

Positive pressure respirator is a respirator that is designed to maintain positive pressure inside the facepiece during exhalation and inhalation (e.g., a powered air-purifying respirator or PAPR).

Potable water or **drinking water** is water which is satisfactory for drinking, culinary, and domestic purposes and meets the requirements of the regulatory health authority having jurisdiction. In laboratory and other industrial water uses, the building's water supply is separated through backflow prevention devices in the building's plumbing system into potable and industrial water systems or sources.

Povidone-iodine (PVP-I) is an iodophor antimicrobial composed of a stable chemical complex of polyvinylpyrrolidone (povidone or PVP) and elemental iodine (ranging from 9.0% to 12.0% available iodine, calculated on a dry basis).

Principal Investigator (PI) is the individual assigned authority and responsibility to direct a research experiment, project, or program that is typically funded by a grant.

Prion is an infectious agent that is composed of protein that typically propagates by transmitting a misfolded protein state.

Protective laboratory clothing is a garment such as a lab coat, gown, smock, or uniform designed to keep personal clothing, forearms, or other exposed bodily surfaces protected from contamination by biological materials or exposure to other hazards.

PUB-3000 is the LBNL *Health and Safety Manual*.

Public Health Service (PHS) is an umbrella organization **in** the U.S. federal government consisting of eight HHS health agencies, the Office of Public Health and Science, and the Commissioned Corps (a uniformed service of health professionals). NIH and CDC are agencies within the PHS.

Quaternary ammonium compound or **quat** is a cationic detergent compound derived from ammonia by replacing the hydrogen atoms with organic radicals, and the compound is especially important as surface-active agents, disinfectants, or in drugs.

Recombinant DNA molecules are defined by the *NIH Guidelines* as molecules that are constructed outside living cells by joining natural or synthetic nucleic acid segments to nucleic acid molecules that can replicate in a living cell or molecules that result from the replication of such molecules.

Recombinant genetic (or genomic) materials are genetic materials that have undergone genetic recombination. See definitions for genetic materials and genetic recombination.

Respirator is a device such as a filtering facepiece or negative-pressure cartridge respirator that is designed and certified to protect the wearer from the inhalation of harmful atmospheres.

Respiratory protection is a control such as a biosafety cabinet, enclosed containment system, or respirator that prevents worker inhalation of an agent to harmful levels.

Responsible Official (RO) is an LBNL person that has the authority and responsibility to ensure compliance with CDC and USDA regulations for possession, use, or transfer of select agents and toxins, as specified in the regulations and on behalf of LBNL.

Ribonucleic acid (**RNA**) is a biologically important type of molecule that consists of a long chain of nucleotide units. Each nucleotide consists of a nitrogenous base, a ribose sugar, and a phosphate. RNA is very similar to DNA, but differs in a few important structural details. For example, in the cell, RNA is usually single-stranded, while DNA is usually double-stranded.

Risk Group (RG) is a system adopted by the CDC and NIH for classifying biological agents by the degree of human hazard. There are four risk groups, and a higher RG number indicates a higher level of hazard.

Safety-engineered sharps or **safety-engineered needles** are sharp tools with a built-in safety feature or mechanism that effectively reduces the risk of accidental skin penetration and a biological exposure incident. Examples include devices that blunt, sheath, or withdraw the sharp when the sharp edge or point has been used or is not in use. Also see below **Sharps with ESIP**.

Sanitization is the process of generally reducing the number of microorganisms by the use of general cleaning agents.

Select agents and toxins are (a) specific pathogenic agents and toxins listed and strictly regulated by the CDC and USDA (i.e., under 7 CFR 331, 9 CFR 121, and 42 CFR 73) because they may be used as agents of mass destruction or pose a severe threat to human, animal, and plant health, and (b) specific genetic elements, recombinant nucleic acids, and recombinant organisms that are related to the list of select agents and toxins as described in the regulations.

Sepsis is the presence of infectious organisms in the blood or other tissue of the body.

Sharp is an object that can penetrate the skin. A sharp is often a tool, device, or material that typically has a sharp edge or point such as a needle, scalpel, razor, blade, broken glass piece, broken capillary tube, or an exposed wire end.

Sharps with engineered sharps injury protection (ESIP) are defined in the OSHA Bloodborne Pathogen Standard as a nonneedle sharp or a needle device used for withdrawing body fluids, accessing a vein or artery, or administering medications or other fluids, with a built-in safety feature or mechanism that effectively reduces the risk of an exposure incident.

Should means there is an expectation that the condition will be met unless there is a compelling and countervailing reason for not meeting the condition and the alternative provides a sufficient level of safety that does not conflict with other requirements. When the term *should* is used in a section identified as guidelines, the condition is desirable or is a best management practice, and the condition or other alternatives should be implemented when needed to control apparent risk.

Soap is sodium or potassium salt of fatty acids.

Soil is defined by the USDA PPQ as a mixture of inorganic and organic materials, when the organic materials are unidentifiable plant and/or animal parts. The PPQ Soil Circular defines what is and is not soil.

Standard facilities are design features, materials, and equipment incorporated into the laboratory or facility in accordance with BL containment criteria stated in BMBL and the *NIH Guidelines.*

Standard microbiological practices and **special practices** are administrative controls listed as BL containment criteria in BMBL and the *NIH Guidelines* to protect workers and the environment.

Standard safety equipment and PPE are equipment controls listed as BL containment criteria in BMBL and the *NIH Guidelines* that provide primary barriers to prevent worker exposure to infectious agents.

Standards are the external rules established by government, contract, and funding regulations and nonregulatory standards that form the requirements of the LBNL Biosafety Program.

Sterilant is an antimicrobial chemical or physical agent that is capable of killing all microbes including their spores. It fulfills the **sterility assurance level**.

Sterile is an adjective that means completely free of all living microorganisms and viruses.

Sterility assurance level is the degree of killing efficacy in a sterilization process equal to the probability of a microorganism or virus surviving on the item of less than one in one million.

Sterilization is the process of completely destroying all living microorganisms and viruses on an object. Common sterilization methods include autoclaving and incineration.

Sterilization procedure is a treatment process to which an item is subjected after which the probability of a microorganism or virus (including a high number of bacterial endospores) surviving on the item is less than one in one million. This level of killing efficacy is referred to as the **sterility assurance level**.

Subcontractor Job Hazards Analysis and Work Authorization (SJHAWA) is the LBNL work authorization document that identifies work hazards and controls for subcontractors, vendors, and guests.

Supervisor Accident Analysis Report (SAAR) is the LBNL report that the supervisor must complete to document the nature, cause, and necessary actions related to an employee injury.

Surfactant is a ***surf***ace ***act***ive ***a***gen***t*** that is usually an organic compound that possesses both hydrophilic (water-loving) and lipophilic (fat-liking) properties that make the compound soluble in water and lipids.

Technical Assurance Program (TAP). See ES&H Technical Assurance Program above.

Toxin, biological toxin, or **biotoxin** is a poisonous substance produced by a living organism. The term “toxin” is used in this manual.

Transgenic organism is an organism whose genome has been altered by the transfer of a gene or genes from another species or breed.

Transmissible spongiform encephalopathies (TSEs) are neurodegenerative diseases such as Creutzfeldt-Jakob disease (CJD) in humans and bovine spongiform encephalopathy (BSE or "mad cow disease") that affect humans and a variety of domestic and wild animal species.

Transportation Authorization Form (TAF) is an LBNL form that is 1) generated when LBNL Transportation is asked via the Facilities Division Work Request Center to move an item, and then 2) completed by the requester and affixed to the item prior to movement to indicate that the item is safe and ready for movement.

Ultraviolet (**UV**) **radiation** or **UV light** is electromagnetic radiation with a wavelength shorter than that of visible light, but longer than X-rays, in the range of 10 nanometers (nm) to 400 nm, and energies from 3 electron volts (eV) to 124 eV.

United States Department of Agriculture (USDA) is an agency of the U.S. government with the following types of mission areas: farm and foreign agriculture, food, food safety, nutrition, natural resources, environment, research, education, economics, and rural development.

United States Munitions List (USML) is a list of articles, services, and related technology designated as defense-related that are defined in ITAR and fall under the export and temporary import jurisdiction of the Department of State.

Veterinary Services (VS) is a branch of APHIS that protects and improves the health, quality, and marketability of our nation's animals, animal products, and veterinary biologics by preventing, controlling and/or eliminating animal diseases, and monitoring and promoting animal health and productivity.

Viral vector is a viral tool commonly used to deliver genetic material into cells.

Virus is a small infectious agent that can only replicate inside the cells of another organism.

Worker Safety and Health Program (WSHP) is a DOE rule (10 CFR 851) that establishes the framework for DOE's nonradiological worker safety and health programs just as the Occupational Safety and Health Administration (OSHA) does for the private industry.

World Health Organization (WHO) is an agency of the United Nations that specializes in the attainment by all peoples of the highest possible level of health.

Zoonosis or **zoonose** is an infectious disease that can be transmitted (in some instances, by a vector) from nonhuman animals, both wild and domestic, to humans or from humans to nonhuman animals (the latter is sometimes called reverse zoonosis). Zoonotic is an adjective that pertains to zoonosis.

Appendix B

Pathogen and Toxin Lists

B.1 Introduction and Scope

Pathogens and toxins are discussed in detail in Section 3.3.2 of this manual. This appendix provides the following lists of biological agents and toxins presented in Section 3.3.2:

- Human etiologic agents (pathogens) from Appendix B of the *NIH Guidelines*
- Select agents and toxins from the National Select Agent Registry (NSAR)
- Plant pathogens previously identified by U.S. Department of Agriculture (USDA)

These lists are provided for convenience in this manual, but may not reflect the actual regulatory list or applicable agents or materials at any given time. Regulatory sources, standards, and Web links noted in this appendix and Section 3.3.2 should be consulted to confirm applicable agents or toxins.

B.2 *NIH Guidelines* Human Etiologic Agents

This section provides a list of human pathogens and their Risk Group (RG) 2, RG3, and RG4 designations as excerpted from Appendix B (Classification of Human Etiologic Agents on the Basis of Hazard) of the *NIH Guidelines*, Amendment Effective September 22, 2009.

B.2.1 Risk Group 1 Agents

RG1 agents are not associated with disease in healthy adult humans. Examples of RG1 agents include asporogenic *Bacillus subtilis* or *Bacillus licheniformis* (see Appendix C-IV-A, *Bacillus subtilis* or *Bacillus licheniformis* Host-Vector Systems, Exceptions); adeno-associated virus (AAV) Types 1 through 4; and recombinant AAV constructs, in which the transgene does not encode either a potentially tumorigenic gene product or a toxin molecule and which are produced in the absence of a helper virus. A strain of *Escherichia coli* (see Appendix C-II-A, *Escherichia coli* K-12 Host Vector Systems, Exceptions) is an RG1 agent if it 1) does not possess a complete lipopolysaccharide (i.e., lacks the O antigen); and 2) does not carry any active virulence factor (e.g., toxins) or colonization factors and does not carry any genes encoding these factors.

Those agents not listed in RGs 2, 3, and 4 are not automatically or implicitly classified in RG1; a risk assessment must be conducted based on the known and potential properties of the agents and their relationship to agents that are listed.

B.2.2 Risk Group 2 Agents

RG2 agents are associated with human disease that is rarely serious and for which preventive or therapeutic interventions are *often* available.

Risk Group 2 Bacterial Agents Including Chlamydia

- *Acinetobacter baumannii* (formerly *Acinetobacter calcoaceticus*)
- *Actinobacillus*
- *Actinomyces pyogenes* (formerly *Corynebacterium pyogenes*)
- *Aeromonas hydrophila*
- *Amycolata autotrophica*
- *Archanobacterium haemolyticum* (formerly *Corynebacterium haemolyticum*)
- *Arizona hinshawii* - all serotypes
- *Bacillus anthracis*
- *Bartonella henselae, B. quintana, B. vinsonii*
- *Bordetella* including *B. pertussis*
- *Borrelia recurrentis, B. burgdorferi*
- *Burkholderia* (formerly *Pseudomonas* species) (except those listed in Appendix B-III-A (RG3))
- *Campylobacter coli, C. fetus, C. jejuni*
- *Chlamydia psittaci*, *C. trachomatis*, *C. pneumoniae*
- *Clostridium botulinum*, *Cl. chauvoei, Cl. haemolyticum, Cl. histolyticum, Cl. novyi, Cl. septicum, Cl. tetani*
- *Corynebacterium diphtheriae, C. pseudotuberculosis, C. renale*
- *Dermatophilus congolensis*
- *Edwardsiella tarda*
- *Erysipelothrix rhusiopathiae*
- *Escherichia coli* - all enteropathogenic, enterotoxigenic, enteroinvasive and strains bearing K1
- antigen, including *E. coli* O157:H7
- *Haemophilus ducreyi, H. influenzae*
- *Helicobacter pylori*
- *Klebsiella*: All species except *K. oxytoca* (RG1)
- *Legionella* including *L. pneumophila*
- *Leptospira interrogans*: All serotypes
- *Listeria*
- *Moraxella*
- *Mycobacterium* (except those listed in Appendix B-III-A (RG3)) including *M. avium* complex, *M. asiaticum, M.bovis* BCG vaccine strain, *M. chelonei, M. fortuitum, M. kansasii, M. leprae, M. malmoense, M. marinum, M.paratuberculosis, M. scrofulaceum, M. simiae, M. szulgai, M. ulcerans, M. xenopi*
- *Mycoplasma*, except *M. mycoides* and *M. agalactiae*, which are restricted animal pathogens
- *Neisseria gonorrhoeae*, *N. meningitidis*
- *Nocardia asteroides, N. brasiliensis, N. otitidiscaviarum, N. transvalensis*
- *Rhodococcus equi*
- *Salmonella* including *S. arizonae, S. cholerasuis, S. enteritidis, S. gallinarum-pullorum, S. meleagridis, S.paratyphi,* A, B, C, *S. typhi*, *S. typhimurium*
- *Shigella* including *S. boydii, S. dysenteriae,* type 1, *S. flexneri, S. sonnei*
- *Sphaerophorus necrophorus*
- *Staphylococcus aureus*
- *Streptobacillus moniliformis*
- *Streptococcus* including *S. pneumoniae, S. pyogenes*
- *Treponema pallidum, T. carateum*
- *Vibrio cholerae, V. parahemolyticus, V. vulnificus*

- *Yersinia enterocolitica*

Risk Group 2 Fungal Agents

- *Blastomyces dermatitidis*
- *Cladosporium bantianum, C. (Xylohypha) trichoides*
- *Cryptococcus neoformans*
- *Dactylaria galopava (Ochroconis gallopavum)*
- *Epidermophyton*
- *Exophiala (Wangiella) dermatitidis*
- *Fonsecaea pedrosoi*
- *Microsporum*
- *Paracoccidioides braziliensis*
- *Penicillium marneffei*
- *Sporothrix schenckii*
- *Trichophyton*

Risk Group 2 Parasitic Agents

- *Ancylostoma* human hookworms including *A. duodenale, A. ceylanicum*
- *Ascaris* including *Ascaris lumbricoides suum*
- *Babesia* including *B. divergens, B. microti*
- *Brugia* filaria worms including *B. malayi, B. timori*
- *Coccidia*
- *Cryptosporidium* including *C. parvum*
- *Cysticercus cellulosae* (hydatid cyst, larva of *T. solium*)
- *Echinococcus* including *E. granulosis, E. multilocularis, E. vogeli*
- *Entamoeba histolytica*
- *Enterobius*
- *Fasciola* including *F. gigantica, F. hepatica*
- *Giardia* including *G. lamblia*
- *Heterophyes*
- *Hymenolepis* including *H. diminuta, H. nana*
- *Isospora*
- *Leishmania* including *L. braziliensis, L. donovani, L. ethiopia, L. major, L. mexicana, L. peruvania, L. tropica*
- *Loa loa* filaria worms
- *Microsporidium*
- *Naegleria fowleri*
- *Necator* human hookworms including *N. americanus*
- *Onchocerca* filaria worms including, *O. volvulus*
- *Plasmodium* including simian species, *P. cynomologi, P. falciparum, P. malariae, P. ovale, P. vivax*
- *Sarcocystis* including *S. sui hominis*
- *Schistosoma* including *S. haematobium, S. intercalatum, S. japonicum, S. mansoni, S. mekongi*
- *Strongyloides* including *S. stercoralis*
- *Taenia solium*
- *Toxocara* including *T. canis*
- *Toxoplasma* including *T. gondii*
- *Trichinella spiralis*
- *Trypanosoma* including *T. brucei brucei, T. brucei gambiense, T. brucei rhodesiense, T. cruzi*

- *Wuchereria bancrofti* filaria worms

Risk Group 2 Viruses

Adenoviruses, human: All types

Alphaviruses (togaviruses), group A arboviruses:
- Eastern equine encephalomyelitis virus
- Venezuelan equine encephalomyelitis vaccine strain TC-83
- Western equine encephalomyelitis virus

Arenaviruses:
- Lymphocytic choriomeningitis virus (nonneurotropic strains)
- Tacaribe virus complex
- Other viruses as listed in BMBL

Bunyaviruses:
- Bunyamwera virus
- Rift Valley fever virus vaccine strain MP-12
- Other viruses as listed in BMBL

Calciviruses

Coronaviruses

Flaviviruses (togaviruses), group B arboviruses:
- Dengue virus, serotypes 1, 2, 3, and 4
- Yellow fever virus vaccine strain 17D
- Other viruses as listed in BMBL

Hepatitis A, B, C, D, and E viruses

Herpesviruses, except *Herpesvirus simiae* (monkey B virus) (see Appendix B-IV-D, *Risk Group 4 (RG4) – Viral Agents*):
- Cytomegalovirus
- Epstein Barr virus
- *Herpes simplex,* types 1 and 2
- *Herpes zoster*
- Human herpesvirus, types 6 and 7

Orthomyxoviruses:
- Influenza viruses, types A, B, and C
- Tick-borne orthomyxoviruses

Papovaviruses: All human papilloma viruses

Paramyxoviruses:
- Newcastle disease virus
- Measles virus
- Mumps virus
- Parainfluenza viruses, types 1, 2, 3, and 4
- Respiratory syncytial virus

Parvoviruses: Human parvovirus (B19)

Picornaviruses:
- Coxsackie viruses, types A and B
- Echoviruses, all types
- Polioviruses, all types, wild and attenuated
- Rhinoviruses, all types

Poxviruses: All types except monkeypox virus (see Appendix B-III-D, *Risk Group 3 (RG3)—Viruses and Prions*) and restricted poxviruses including alastrim, smallpox, and whitepox (see BMBL Section V-L)

Reoviruses: All types including coltivirus, human rotavirus, and orbivirus (Colorado tick fever virus)

Rhabdoviruses:
- Rabies virus, all strains
- Vesicular stomatitis virus (Laboratory-adapted strains including VSV-Indiana, San Juan, and Glasgow)

Togaviruses (see alphaviruses and flaviviruses): Rubivirus (rubella)

B.2.3 Risk Group 3 Agents

RG3 agents are associated with serious or lethal human disease for which preventive or therapeutic interventions *may be* available.

Risk Group 3 Bacterial Agents Including Rickettsia

- *Bartonella*
- *Brucella* including *B. abortus, B. canis*, *B. suis*
- *Burkholderia (Pseudomonas) mallei, B. pseudomallei*
- *Coxiella burnetii*
- *Francisella tularensis*
- *Mycobacterium bovis* (except BCG strain, see Appendix B-II-A, *Risk Group 2 (RG2) - Bacterial Agents Including Chlamydia*), *M. tuberculosis*
- *Pasteurella multocida* type B: "Buffalo" and other virulent strains
- *Rickettsia akari, R. australis, R. canada, R. conorii, R. prowazekii, R. rickettsii, R, siberica, R. tsutsugamushi, R. typhi (R. mooseri)*
- *Yersinia pestis*

Risk Group 3 Fungal Agents

- *Coccidioides immitis* (sporulating cultures; contaminated soil)
- *Histoplasma capsulatum, H. capsulatum var. duboisii*

Risk Group 3 Parasitic Agents
None

Risk Group 3 Viruses and Prions

Alphaviruses (Togaviruses), group A arboviruses:
- Semliki Forest virus
- St. Louis encephalitis virus

- Venezuelan equine encephalomyelitis virus (except the vaccine strain TC-83, see Appendix B-II-D (RG2))
- Other viruses as listed in BMBL

Arenaviruses:
- Flexal
- Lymphocytic choriomeningitis virus (LCM) (neurotropic strains)

Bunyaviruses:
- Hantaviruses including Hantaan virus
- Rift Valley fever virus

Flaviviruses (togaviruses), group B arboviruses:
- Japanese encephalitis virus
- Yellow fever virus
- Other viruses as listed in BMBL

Orthomyxoviruses: Influenza viruses 1918–1919 H1N1 (1918 H1N1), human H2N2 (1957–1968), and highly pathogenic avian influenza H5N1 strains within the Goose/Guangdong/96-like H5 lineage (HPAI H5N1)

Poxviruses: Monkeypox virus

Prions: Transmissible spongioform encephalopathy (TME) agents (Creutzfeldt-Jacob disease and kuru agents) (see BMBL, for containment instruction)

Retroviruses
- Human immunodeficiency virus (HIV) types 1 and 2
- Human T cell lymphotropic virus (HTLV) types 1 and 2
- Simian immunodeficiency virus (SIV)

Rhabdoviruses: Vesicular stomatitis virus

B.2.4 Risk Group 4 Agents

RG4 agents are likely to cause serious or lethal human disease for which preventive or therapeutic interventions are *not usually* available.

Risk Group 4 Bacterial Agents
None

Risk Group 4 Fungal Agents
None

Risk Group 4 Parasitic Agents
None

Risk Group 4 Viral Agents

Arenaviruses
- Guanarito virus
- Lassa virus

- Junin virus
- Machupo virus
- Sabia

Bunyaviruses (Nairovirus): Crimean-Congo hemorrhagic fever virus

Filoviruses
- Ebola virus
- Marburg virus

- Flaviruses (Togaviruses), group B arboviruses: Tick-borne encephalitis virus complex including Absetterov, Central European encephalitis, Hanzalova, Hypr, Kumlinge, Kyasanur Forest disease, Omsk hemorrhagic fever, and Russian spring-summer encephalitis viruses

Herpesviruses (alpha): Herpesvirus simiae (herpes B or monkey B virus)

Paramyxoviruses: Equine morbillivirus

Hemorrhagic fever agents and viruses as yet undefined

B.2.5 Animal Viral Etiologic Agents in Common Use

The following list of animal etiologic agents is appended to the list of human etiologic agents. None of these agents are associated with disease in healthy adult humans; they are commonly used in laboratory experimental work. A containment level appropriate for RG1 human agents is recommended for their use. For agents that are infectious to human cells, e.g., amphotropic and xenotropic strains of murine leukemia virus, a containment level appropriate for RG2 human agents is recommended.

Baculoviruses:
- Herpesviruses
- Herpesvirus ateles
- Herpesvirus saimiri
- Marek's disease virus
- Murine cytomegalovirus

Papovaviruses:
- Bovine papilloma virus
- Polyoma virus
- Shope papilloma virus
- Simian virus 40 (SV40)

Retroviruses:
- Avian leukosis virus
- Avian sarcoma virus
- Bovine leukemia virus
- Feline leukemia virus
- Feline sarcoma virus
- Gibbon leukemia virus
- Mason-Pfizer monkey virus
- Mouse mammary tumor virus

- Murine leukemia virus
- Murine sarcoma virus
- Rat leukemia virus

B.2.6 Murine Retroviral Vectors

Murine retroviral vectors to be used for human transfer experiments (less than 10 liters) that contain less than 50% of their respective parental viral genome and that have been demonstrated to be free of detectable replication competent retrovirus can be maintained, handled, and administered under Biosafety Level (BL) 1 containment.

B.3 Select Agents and Toxins

Table B-1 provides the list of select agents and toxins on the **National Select Agent Registry (NSAR)** established by the Department of Health and Human Services (HHS) Centers for Disease Control and Prevention (CDC) and United States Department of Agriculture (USDA). The most-recent online list may be found at http://www.selectagents.gov/index.html. Listed select agents and toxins are categorized as follows:

- Agents and toxins that cause disease in humans are listed by HHS CDC as:
  - HHS select agents and toxins that affect humans
  - OVERLAP select agents and toxins that affect both (or OVERLAP with) humans and animals
- Agents and toxins that cause disease in agricultural animals or plants are listed by USDA as:
  - OVERLAP select agents and toxins that affect humans and animals
  - USDA select agents and toxins that affect animals
  - USDA Plant Protection and Quarantine (PPQ) select agents and toxins that affect plants

Table B-1
National Select Agent Registry Select Agents and Toxins

HHS and USDA Select Agents and Toxins 7 CFR Part 331, 9 CFR Part 121, and 42 CFR Part 73	
HHS Select Agents and Toxins	**OVERLAP Select Agents and Toxins**
Abrin	*Bacillus anthracis*
Botulinum neurotoxins	*Brucella abortus*
Botulinum neurotoxin producing species of *Clostridium*	*Brucella melitensis*
Cercopithecine herpesvirus 1 (Herpes B virus)	*Brucella suis*
Clostridium perfringens epsilon toxin	*Burkholderia mallei (formerly Pseudomonas mallei)*
Coccidioides posadasii/Coccidioides immitis	*Burkholderia pseudomallei (formerly Pseudomonas pseudomallei)*
Conotoxins	Hendra virus
Coxiella burnetii	Nipah virus
Crimean-Congo hemorrhagic fever virus	Rift Valley fever virus
Diacetoxyscirpenol	Venezuelan equine encephalitis virus
Eastern Equine Encephalitis virus	**USDA Select Agents and Toxins**
Ebola virus	African horse sickness virus
Francisella tularensis	African swine fever virus
Lassa fever virus	Akabane virus
Marburg virus	Avian influenza virus (highly pathogenic)
Monkeypox virus	Bluetongue virus (exotic)
Reconstructed replication competent forms of the 1918 pandemic influenza virus containing any portion of the coding regions of all eight gene segments (Reconstructed1918 Influenza virus)	Bovine spongiform encephalopathy agent
Ricin	Camel pox virus
Rickettsia prowazekii	Classical swine fever virus
Rickettsia rickettsii	*Ehrlichia ruminantium (Heartwater)*
Saxitoxin	Foot-and-mouth disease virus
Shiga-like ribosome inactivating proteins	Goat pox virus
Shigatoxin	Japanese encephalitis virus
South American hemorrhagic fever viruses (Flexal, Guanarito, Junin, Machupo, Sabia)	Lumpy skin disease virus
Staphylococcal enterotoxins	Malignant catarrhal fever virus (Alcelaphine herpesvirus, Type 1)
T-2 toxin	Menangle virus
Tetrodotoxin	*Mycoplasma capricolum* subspecies *capripneumoniae* (contagious caprine pleuropneumonia)
Tick-borne encephalitis complex (flavi)	*Mycoplasma mycoides* subspecies *mycoides* small colony (*Mmm* SC) (contagious bovine pleuropneumonia)

HHS and USDA Select Agents and Toxins 7 CFR Part 331, 9 CFR Part 121, and 42 CFR Part 73	
viruses (Central European tick-borne encephalitis, Far Eastern tick-borne encephalitis, Kyasanur Forest disease, Omsk hemorrhagic fever, Russian Spring and Summer encephalitis) Variola major virus (Smallpox virus) Variola minor virus (Alastrim) *Yersinia pestis*	Peste des petits ruminants virus Rinderpest virus Sheep pox virus Swine vesicular disease virus Vesicular stomatitis virus (exotic): Indiana subtypes VSV-IN2 and VSV-IN3 Virulent Newcastle disease virus[1] **USDA Plant Protection and Quarantine (PPQ) Select Agents and Toxins** *Peronosclerospora philippinensis (Peronosclerospora sacchari)* *Phoma glycinicola* (formerly *Pyrenochaeta glycines*) *Ralstonia solanacearum* race 3, biovar 2 *Rathayibacter toxicus* *Sclerophthora rayssiae var zeae* *Synchytrium endobioticum* *Xanthomonas oryzae* *Xylella fastidiosa* (citrus variegated chlorosis strain)

Source: NSAR list updated 11/17/2008

[1]A virulent Newcastle disease virus (avian paramyxovirus serotype 1) has an intracerebral pathogenicity index in day-old chicks (Gallus gallus) of 0.7 or greater or has an amino acid sequence at the fusion (F) protein cleavage site that is consistent with virulent strains of Newcastle disease virus. A failure to detect a cleavage site that is consistent with virulent strains does not confirm the absence of a virulent virus.

Table B-2 provides additional information, permissible toxin amounts, and synonyms for biological toxins that are listed on the NSAR of select agents and toxins. A permissible toxin amount is the maximum quantity of biological toxin that can be under the control of a principal investigator at any time without regulation under the CDC and USDA select agent and toxin regulations.

Table B-2
Additional Information for National Select Agent Registry Toxins

Name (Permissible Toxin Amount)	Synonyms/Types (Strains)/ Key Words	CAS Numbers	Description
Abrin (100 mg)	Abrina, Abrin B, Abrin C, Abrin D, Abrin reconstituted (A+B mix), Abrin agglutinin, Toxalbumin	**1393-62-0** (Abrin) **53597-23-2** (Abrin A) **53597-24-3** (Abrin C)	A powerful phytotoxin present in the seeds of *Abrus precatorius* (common names include precatory bean, rosemary pea, and jequirity).
Botulinum neurotoxin (0.5 mg)	Botulinum neurotoxin, Types A, B, C, C1, C2, D, E, F, and G (7 serotypes with a few subtypes). *Clostridium botulinum* toxin, botulinum toxin, botulinus toxin, botulin toxin	**93384-43-1** (Type A)	Produced by the soil bacterium *Clostridium botulinum* under anaerobic conditions. The most potent toxin known but heat labile and neutralized by specific antibodies.
Clostridium perfringens epsilon toxin (100 mg)	*Clostridium perfringens* Type B epsilon toxin; *Clostridium perfringens,* Type D epsilon toxin	None found	One of 12 protein toxins produced by the bacterium *Clostridium perfringens*. Of the 5 types of *Clostridium. perfringens*, only 2 (Types B and D) make the epsilon neurotoxin.
Conotoxins (100 mg)	Conotoxins GI, GIA, GII, GIV, GIIIA, GIIIB, GIIIC, GIVA, GVIB, GVIC, Im1, MI,MVIIA,MVIIB, MVIIC,MVIIIv, MVIIDSIA, SVIB (plus more). *Conus geographus* venom, *Conus magus* venom, *Conus straiatus* venom	**81133-24-6** (IV) **76862-65-2** (GI) **156467-85-5** (Im 1) **106375-28-4** (GVIA) **107452-89-1** (MVIIA) **147794-23-8** (MVIIC) **150433-82-2** (SVIB)	Small peptide venoms produced by cone shells (Conidia) and marine snails (carnivorous gastropod “cone” mollusks). Venoms vary between species. Act on neuronal communications but each (alpha-mu-, and omega-conotoxins) target a different aspect of the process.
Diacetoxy-scirpenol (1,000 mg)	Diacetoxyscirpenol; Anguidin; Auguidine; Insariotoxin; DAS; 4,15-Diacetoxyscirpen-3-OL; Scirpenetriol 4,15-diacetate; 4 beta, 15-diacetoxy-3-alpha-hydroxy-12, 13-epoxytrichotech-9-ene	**2270-40-8** **4297-61-4** (3-A-acetyldiacetoxyscir-penol).	Trichothecene compound toxins (mycotoxins) produced by various fungus *Fusarium*, which grow on barley, corn, rye, wheat, etc.
Ricin (100 mg)	Ricinotoxin, Ricinus toxin, Ricin A, Ricin B, Ricin C, Ricin D, Ricin Toxin-Con A, Concanvalin A, Ricin nitrogen, Ricine, Ricin total	**9009-86-3** (Ricin), **63099-95-6** **9040-12-4** (Ricin D) **72514-84-2** (Ricin D	A powerful phytotoxin present in the seeds of the castor bean oil plant (*Ricinus communis*).

Name (Permissible Toxin Amount)	Synonyms/Types (Strains)/ Key Words	CAS Numbers	Description
	hydrolysate, Ricinus lectin, *Ricnus* agglutinin	ananine chain) **66419-04-03** (Ricin D iso-leucine chain reduced)	
Saxitoxin (100 mg)	Mytilotoxin; Saxitoxin hydrate; Saxitoxin hydrochloride; Saxitoxin dihydrochloride; STX dihydrochloride; neo-Saxitoxin (neo-STX); Saxitoxin p-bromo benzenesulfonate; *Mytilus californianus* poison/toxin; *Saxidomas giganteus* poison/ toxin; *Gonyaulas catenella* poison/ toxin; Saxitonin diacetate salt	**35523-89-8** **35554-08-6** **80450-05-01** **64296-20-4** (neo-STX from dinoflagellates) **220355-66-8** (Saxitoxin doacetate salt)	Toxin produced by bacterium that grow in other organisms; e.g., poisonous mussels *(Mytilus*), clams (*Saxidomas*, and Plankton (*Gonyaulax*).
Shigatoxin (100 mg)	*Shigella dysenteria* neurotoxin; shigella diysenteriae exotoxin Type I; Verocytotoxin; Verotoxin	**7575-64-1**	Protein exotoxin produced by the bacterium *Shigella dysenteriae* that affects both the gut and the central nervous system.
Shiga-like-ribosome inactivating proteins (100 mg)	A-chain portion of *Shigella dysenteria* Shigatoxin; Enterohemorrhagic *Escherichia coli* toxin SLT-1 and SLT-2; *Escherichia coli* 0157; H7 toxin	None found	Group of structurally-related toxins similar to shigatoxin that block cell protein synthesis.
Staphylococcal enterotoxin (5.0 mg)	Staphylococcus enterotoxins types A,B,F. Enterotoxin F is the Toxic Shock Syndrome “Toxin-1.”	**11100-45-1** (Enterotoxin B)	Toxin produced by a strain of *Staphylococcus aureus.* Acts on receptors in gut.
Tetrotoxin (100 mg)	Fugu poison; fugtoxin; Anhydroepiterodotoxin; Deoxytetrodotoxin; 4-Deoxytetrodotoxin; Deoxyterttoxin;Diateylanhydrotetrd otoxin; Diacetate 4,9-anhydrotetrodotoxin; Ethoxytetrodotoxin; Maculotoxin; Ethyl tetrodotoxin; 4-Deoxy tetrodotoxin; Spheroidine; Tarichatoxin; 4-amino-4-deoxy, 4,9-Anhydrotetrodotoxin; 8,8-Diacetate 4,9-anhydrotetrodotoxin; tetrodotoxin citrate; TTX; (4-alpha)-4-amino-4-deoxy-tetrodotoxin	**4368-28-9** (tetrodotoxin) **13072-89-4** (4,9-anhydrotetrodotoxin) **13285-84-2** (8,8-diacetate 4,9-anhydro tetrodotoxin) **7724-38-1** [(4 alpha)-4-amino-4-deoxy-tetrodotoxin] **7724-41-6** (4-deoxy-tetrodotoxin) **18660-81-6** (Tetrodotoxin citrate salt) **7724-39-2** [O(sup 4)- methyl tetrodotoxin] **7724-40-5** [O(sup 5)-ethyl tetrodotoxin]	Highly lethal neurotoxin present in numerous species of puffer fish (*Tetraodontoidea*) and newts (*Tarik*a).
T-2 Toxin (1000 mg)	Toxin T-2; T-2 mycotoxin; T-2 hemisuccinate; T-2 tetraol; T-2 Toxin d3; T-2 Triol; 2,4,5-T-2 ethylhexyl ester; 2,4,5-T-2 methylpropyl ester; Insariotoxin; 12,13-tricothecene; Fusariotoxine T-2; Scirpenol	**21259-20-1** (T-2 Toxin) **34114-99-3** (T-2 tetraol) **120467-83-6** (T-2 Toxind3) **34114-98-2** (T-2 triol) **1928-47-8** (2,4,5-T2 ethylhexyl ester) **4938-72-1** (2,4,5-T-2-methylproply ester)	Trichothecene compound toxins (mycotoxins) produced by various species of fungus *Fusarium*, which grows on barley, corn, rye, wheat.

Source: LBNL EH&S Group (July 2003).

B.4 Plant Pathogens

This appendix of the *Biosafety Manual* provides lists of bacterial, fungal, and viral plant pathogens that may be used to identify agents that might be considered plant pathogens. Current USDA Web sites and the USDA permit process may be needed to determine if the USDA considers agents in specific locations (e.g., California) to be plant pathogens.

B.4.1 Plant Pathogen Bacteria (by Scientific Name)

Agrobacterium radiobacter, Agrobacterium rubi, Agrobacterium tumefaciens, Agrobacterium vitis, Burkholderia andropogonis, Burkholderia caryophylli, Burkholderia cepacia, Burkholderia cichorii, Burkholderia corrugata, Burkholderia gladioli pv. gladioli, Clavibacter michiganensis subsp. insidiosus, Clavibacter michiganensis subsp. michiganensis, Clavibacter michiganensis subsp. sepedonicus, Curtobacterium flaccumfaciens pv. flaccumfaciens, Erwinia amylovora, Erwinia carotovora subsp. atroseptica, Erwinia carotovora subsp. carotovora, Erwinia chrysanthemi, Erwinia chrysanthemi pv. chrysanthemi, Erwinia chrysanthemi pv. dieffenbachiae, Erwinia chrysanthemi pv. zeae, Erwinia tracheiphila, Pantoea stewartii subsp. stewartii, Pseudomonas syringae pv. apii, Pseudomonas syringae pv. atrofaciens, Pseudomonas syringae pv. coronafaciens, Pseudomonas syringae pv. glycinea, Pseudomonas syringae pv. lachrymans, Pseudomonas syringae pv. mori, Pseudomonas syringae pv. papulans, Pseudomonas syringae pv. phaseolicola, Pseudomonas syringae pv. pisi, Pseudomonas syringae pv. syringae, Pseudomonas syringae pv. tabaci, Pseudomonas syringae pv. tomato1, Ralstonia solanacearum2, Rhodococcus fascians, Spiroplasma citri, Streptomyces scabies, Xanthomonas campestris pv. armoraciae, Xanthomonas campestris pv. campestris, Xanthomonas campestris pv. carotae, Xanthomonas campestris pv. cucurbitae, Xanthomonas campestris pv. hederae, Xanthomonas campestris pv. juglandis, Xanthomonas campestris pv. papavericola, Xanthomonas campestris pv. pelargonii, Xanthomonas campestris pv. pruni, Xanthomonas campestris pv. raphani, Xanthomonas campestris pv. vitians, Xanthomonas campestris pv. zinniae, Xanthomonas fragariae, Xanthomonas phaseoli pv. alfalfae, Xanthomonas phaseoli pv. begoniae, Xanthomonas phaseoli pv. glycines, Xanthomonas phaseoli pv. phaseoli, Xanthomonas translucens pv. translucens, Xanthomonas vesicatoria.

B.4.2 Plant Pathogen Fungi (by Scientific Name)

CHYTRIDIOMYCETES

Physoderma maydis

OOMYCETES

Albugo candida, Peronospora sojae, Peronospora trifoliorum, Peronospora viticola, Phytophthora cactorum, Phytophthora capsici, Phytophthora cinnamomi, Phytophthora citricola, Phytophthora fragariae, Phytophthora infestans, Phytophthora megasperma, Phytophthora megasperma f.sp. *medicaginis, Phytophthora rubi* s.sp. *fragariae, Phytophthora sojae, Plasmodiophora brassicae, Pythium aphanidermatum, Pythium arrhenomanes, Pythium graminicola, Pythium irregulare, Pythium ultimum, Sclerophthora macrospora.*

ASCOMYCETES

Apiosporina morbosa (black knot)*, Botryosphaeria obtusa, Botryosphaeria ribis (B. dothidea, B. berengeriana), Claviceps purpurea, Cymadothea trifolii* (sooty blotch)*, Diaporthe phaseolorum, Gaeumannomyces graminis, Gibberella zeae, Glomerella cingulata, Leptosphaerulina trifolii, Monilinia fructicola (Sclerotinia fructicola), Nectria cinnabarina, Ophiostoma ulmi (Ceratocystis ulmi), Pseudopeziza medicaginis, Pseudopeziza trifolii, Sclerotinia sclerotiorum (Whetzelinia sclerotiorum), Sclerotinia trifoliorum, Valsa ambiens, Venturia inaequalis* (apple scab)*, Xylaria polymorpha.*

Powdery Mildews

Erysiphe graminis, Microsphaera vaccinii (on *Ericaceae*)*, Podosphaera clandestina* (on *Rosaceae*), *Sphaerotheca Asteraceae, Cucurbitaceae, Scrophulariaceae), Sphaerotheca macularis* (on hops and strawberry), *Unicinula viticola.*

Coelomycetes

Colletotrichum acutatum, Colletotrichum coccodes, Colletotrichum destructivum, Colletotrichum fragariae, Colletotrichum gloeosporioides, Colletotrichum graminicola, Colletotrichum trifolii, Macrophomina phaseolina (Macrophoma phaseolina, M. phaseoli, Botryodiplodia phaseoli), Phoma medicaginis, Phomopsis juniperovora, Phomopsis sojae, Phomopsis viticola, Septoria rubi, Septoria tritici, Sphaeropsis sapinea (Diplodia pinea), Stagonospora nodorum (Septoria nodorum), Stenocarpelia maydis (Diplodia zeae, D. zeae-maydis).

Hyphomycetes

Alternaria alternata, Alternaria solani, Bipolaris maydis (Heminthosporium maydis, Drechslera maydis), Bipolaris sorokiniana (Helminthosporium sorokiniana, Drechslera sorokiniana), Bipolaris victoriae (Helminthosporium victoriae, Drechslera victoriae), Botrytis cinerea. Cercospora medicaginis, Cercospora zeae-maydis, Cladosporium herbarum, Drechslera avenae (on oats, other grasses), *Drechslera graminea* (on barley, other grasses), *Drechslera poae* (on grasses), *Drechslera teres* (on barley, other grasses), *Drechslera tritici-repentis* (on cereals, other grasses), *Exserohilum turcicum (Helminthosporium turcicum, Bipolaris turcicum), Fusarium acuminatum, Fusarium avenaceum, Fusarium culmorum, Fusarium equiseti, Fusarium graminearum, Fusarium moniliforme, Fusarium oxysporum, Fusarium oxysporum, Fusarium roseum, Fusarium solani, Penicillium expansum, Rhynchosporium secalis, Thielaviopsis basicola, Verticillium albo-atrum, Verticillium dahliae.*

HEMIASCOMYCETES

Taphrina caerulescens (leaf blister on oak, *Ostrya, Rhus), Taphrina communis* (plum pocket on Prunus), *Taphrina deformans* (peach leaf curl).

BASIDIOMYCETES

Wood Rotters and Root-Collar Rotters

Armillaria mellea, Ceratobasidium cerealea, Daedaleopsis confragosa (Daedalea confragosa), Ganoderma applanatum (Fomes applanatus), Ganoderma lucidum, Hirschioporus pargamenus

(Trichaptum biformis, Polyporus pargamenus), Laetiporus sulphureus (Polyporus sulphureus), Phellinus gilius, Phellinus robiniae, Schizophyllum commune, Stereum ostrea, Trametes versicolor (Polyporus versicolor, Coriolus versicolor).

Rusts

Gymnosporangium clavipes (cedar-quince rust), *Gymnosporangium globosum* (cedar-hawthorn rust), *Gymnosporangium juniperi-virginianae* (cedar-apple rust), *Puccinia coronata* (on Rhamnaceae, Eleganaceae/Poaceae), *Puccinia graminis* (on Berberis/Poaceae), *Puccinia recondita* (on Ranunculaceae/Poaceae), *Pucciniastrum americanum* (late leaf rust on raspberry).

Smuts

Tilletia caries (Tilletia tritici), Tilletia laevis (Tilletia foetida), Ustilago avenae, Ustilago hordei, Ustilago tritici, Ustilago zeae.

Other Basidiomycetes

Rhizoctonia solani (Thanatephorus cucumeris), Sclerotium rolfsii.

B.4.3 Plant Pathogen Viruses (Regulated by the State of California)

Alfalfa mosaic, barley yellow dwarf, bean common mosaic, bean yellow mosaic, beet curly top, beet mosaic, cactus virus X, camellia yellow mottle, carnation mottle, cauliflower mosaic, chrysanthemum mosaic, chrysanthemum virus B, cucumber mosaic, cymbidium mosaic, dasheen mosaic, fig mosaic, impatiens necrotic spot, lettuce big vein, lettuce mosaic, lily symptomless, maize dwarf mosaic, odontoglossum ringspot, papaya ringspot, pepper mottle, plum line pattern, potato leafroll, potato virus S, potato virus X, potato virus Y, prune dwarf, prunus necrotic ringspot, squash mosaic, sugarcane mosaic, tobacco etch, tomato mosaic, tomato spotted wilt, turnip mosaic, watermelon mosaic virus 2, zucchini yellow mosaic.

Appendix C

Laboratory Biosafety Level 1 and 2 Criteria

C.1 Introduction and Scope

This appendix describes criteria for laboratory Biosafety Level 1 (BL1) and BL2 in the same manner and level of detail presented in *Biosafety in Microbiological and Biomedical Laboratories* (BMBL), fifth edition. Requirements from the *NIH Guidelines* and Occupational Safety and Health Administration (OSHA) Bloodborne Pathogens (BBP) Standard were also added by LBNL to each BMBL criteria statement as needed to integrate requirements from all of these standards. LBNL requirements were also succinctly added when needed to clarify important requirements or implementation policy specifically related to BMBL criteria statements.

See Section 4.0 of this manual for additional information on biosafety principles and levels, and Section 4.4.1 for additional information on laboratory biosafety levels. See Section 5.0 of this manual for additional information and requirements on controls described in specific criteria statements.

C.2 Laboratory Biosafety Level 1

Biosafety Level 1 is suitable for work involving well-characterized agents not known to consistently cause disease in immunocompetent adult humans, and present minimal potential hazard to laboratory personnel and the environment. BL1 laboratories are not necessarily separated from the general traffic patterns in the building. Work is typically conducted on open benchtops using standard microbiological practices. Special containment equipment or facility design is not required but may be used as determined by appropriate risk assessment. Laboratory personnel must have specific training in the procedures conducted in the laboratory and must be supervised by a scientist with training in microbiology or a related science.

The following standard practices, safety equipment, and facility requirements apply to BL1:

C.2.1 BL1 Standard Microbiological Practices

1. The laboratory supervisor and work lead must enforce LBNL institutional policies that control access to the site and laboratory facilities as described in the LBNL Site Security Plan. Policies and practices include, for example, the hosting of visitors and the issuance of gate passes, badges, and/or keys to control access to the site, building, and/or room based on each individual's business need and experiments in progress. In addition, laboratory areas should have doors for access control.

2. Persons must wash their hands: (a) after working with potentially hazardous materials, recombinant materials, and animals; (b) after removing gloves; and (c) before leaving the laboratory.

3. Eating, drinking, smoking, handling contact lenses, applying cosmetics, and storing food for human consumption are not permitted in laboratory areas. Food must be stored outside the laboratory area in cabinets or refrigerators designated and used for this purpose.

4. Mouth pipetting is prohibited; mechanical pipetting devices must be used.

5. Policies for the safe handling of sharps, such as needles, scalpels, pipettes, and broken glassware, must be developed and implemented. Whenever practical, laboratory supervisors should adopt improved engineering and work practice controls that reduce the risk of sharps injuries.

   Precautions, including those listed below, must always be taken with sharp items. These include:

   a. Careful management of needles and other sharps are of primary importance. Needles must not be bent, sheared, broken, recapped, removed from disposable syringes, or otherwise manipulated by hand before disposal.

   b. Used disposable sharps must be carefully placed in conveniently located puncture-resistant containers used for sharps disposal.

   c. Nondisposable sharps must be placed in a hard-walled container for transport to a processing area for decontamination, preferably by autoclaving.

   d. Broken glassware must not be handled directly. Instead, it must be removed using a brush and dustpan, tongs, or forceps. Plasticware should be substituted for glassware whenever possible.

6. Perform all procedures to minimize splashes and/or aerosols.

7. Decontaminate work surfaces after completion of work and after any spill or splash of potentially infectious or viable recombinant material with appropriate disinfectant.

8. Decontaminate all cultures, stocks, and other potentially infectious or recombinant materials before disposal using an effective method. Depending on where the decontamination will be performed, the following methods should be used prior to transport:

   a. Materials to be decontaminated outside of the immediate laboratory must be placed in a durable leak-proof container and secured for transport.

   b. Materials to be removed from the facility for decontamination must be packed in accordance with applicable local, state, and federal regulations.

9. An effective integrated pest management program is required.

10. The laboratory supervisor must ensure that laboratory personnel receive appropriate training regarding their duties, the necessary precautions to prevent exposures, and exposure evaluation procedures. Personnel must receive annual updates or additional training when procedural or policy changes occur. Personal health status may impact an individual's susceptibility to infection or ability to receive immunizations or prophylactic interventions.

Therefore, all laboratory personnel and particularly women of childbearing age should be provided with information regarding immune competence and conditions that may predispose them to infection. Individuals who have these conditions should be encouraged to identify themselves to the institution's health care provider for appropriate counseling and guidance.

C.2.2 BL1 Special Practices

None required.

C.2.3 BL1 Safety Equipment (Primary Barriers and Personal Protective Equipment)

1. Special containment devices or equipment, such as biosafety cabinets (BSCs), are not generally required.

2. Protective laboratory clothing (e.g., coats, gowns, or uniforms) should be worn to prevent contamination of personal clothing.

3. Eye protection must be worn in the laboratory and when conducting procedures that have the potential to create splashes of biological materials or other hazardous materials.

4. Gloves must be worn to protect hands from exposure to hazardous materials. Glove selection should be based on an appropriate risk assessment. Alternatives to latex gloves should be available. Wash hands prior to leaving the laboratory. In addition, BL1 workers should:

    a. Change gloves when contaminated, when their integrity has been compromised, or when otherwise necessary.

    b. Remove gloves and wash hands when work with hazardous materials has been completed and before leaving the laboratory.

    c. Do not wash or reuse disposable gloves. Dispose of used gloves with other contaminated laboratory waste. Hand washing protocols must be rigorously followed.

C.2.4 BL1 Laboratory Facilities (Secondary Barriers)

1. Laboratories should have doors for access control.

2. Laboratories must have a sink for hand washing.

3. The laboratory should be designed so that it can be easily cleaned. Carpets and rugs in laboratories are not appropriate.

4. Laboratory furniture must be capable of supporting anticipated loads and uses. Spaces between benches, cabinets, and equipment should be accessible for cleaning.

    a. Benchtops must be impervious to water and resistant to heat, organic solvents, acids, alkalis, and other chemicals.

b. Chairs used in laboratory work must be covered with a nonporous material that can be easily cleaned and decontaminated with appropriate disinfectant.

5. Laboratory windows that open to the exterior should be fitted with screens.

C.3 Laboratory Biosafety Level 2

Biosafety Level 2 builds upon BL1. BL2 is suitable for work involving agents that pose moderate hazards to personnel and the environment. It differs from BL1 in that 1) laboratory personnel have specific training in handling pathogenic agents and are supervised by scientists competent in handling infectious agents and associated procedures; 2) access to the laboratory is restricted when work is being conducted; and 3) all procedures in which infectious aerosols or splashes may be created are conducted in BSCs or other physical containment equipment.

The following standard and special practices, safety equipment, and facility requirements apply to BL2:

C.3.1 BL2 Standard Microbiological Practices

1. The laboratory supervisor and work lead must enforce the institutional policies that control access to the site and laboratory facilities as described in the LBNL Site Security Plan. Policies and practices include, for example, the hosting of visitors and the issuance of gate passes, badges, and/or keys to control access to the site, building, and/or room based on each individual's business need and experiments in progress. Access to the laboratory should be controlled when the laboratory is unoccupied during nonbusiness hours, (e.g., by locking doors to the laboratory areas and/or doors to the building entrance).

2. Persons must wash their hands (a) after working with potentially hazardous materials, recombinant materials, and animals; (b) after removing gloves; and (c) before leaving the laboratory.

3. Eating, drinking, smoking, handling contact lenses, applying cosmetics, and storing food for human consumption are not permitted in laboratory areas. Food must be stored outside the laboratory area in cabinets or refrigerators designated and used for this purpose.

4. Mouth pipetting is prohibited; mechanical pipetting devices must be used.

5. Policies for the safe handling of sharps, such as needles, scalpels, pipettes, and broken glassware, must be developed and implemented. Whenever practical, the laboratory supervisor and work lead should adopt improved engineering and work practice controls that reduce risk of sharps injuries. Use of sharps with Risk Group (RG) 2 materials should be restricted and included in the Biological Use Authorization (BUA) as part of the risk assessment.

   Precautions, including those listed below, must always be taken with sharp items:

   a. Careful management of needles and other sharps are of primary importance. Needles must not be bent, sheared, broken, recapped, removed from disposable syringes, or otherwise manipulated by hand before disposal.

b. Used disposable sharps must be carefully placed in conveniently located, properly labeled, leakproof, puncture-resistant, and closable containers used for sharps disposal. Contaminated disposable sharps are disposed of immediately after use in containers that are not overfilled. These containers are closed immediately when full.

c. Nondisposable sharps must be placed in a properly labeled, leakproof, puncture-resistant, hard-walled container for transport to a processing area for decontamination, preferably by autoclaving. In addition, these sharps must not be stored or processed in a manner that requires workers to reach by hand into the containers where these sharps have been placed.

d. Broken glassware must not be handled directly. Instead, it must be removed using a brush and dustpan, tongs, or forceps. Plasticware should be substituted for glassware whenever possible.

6. Perform all procedures to minimize the creation of splashes and/or aerosols.

7. Decontaminate work surfaces after completion of work and after any spill or splash of potentially infectious or viable recombinant material with appropriate disinfectant.

8. Decontaminate all cultures, stocks, and other potentially infectious or recombinant materials before disposal, using an effective method. Depending on where the decontamination will be performed, the following methods should be used prior to transport:

   a. Materials to be decontaminated outside of the immediate laboratory must be placed in a durable, leak-proof container and secured for transport.

   b. Materials to be removed from the facility for decontamination must be packed in accordance with applicable local, state, and federal regulations.

9. When infectious agents (i.e., human pathogens) are present or there are organisms that require special provisions for entry (e.g., vaccination), additional biological hazard warning signage is required at the laboratory entrance. This signage must incorporate the universal biohazard symbol and include the laboratory's biosafety level; the identity of the agent(s) or the words Infectious Agent(s); the name and telephone number of the supervisor, work lead, PI, or other responsible personnel; and any special requirements or procedures for entering and exiting the laboratory. The Chemical Safety Hygiene Plan (CHSP) Caution Placard will be used to accomplish these additional signage requirements. Any requirements for posting identities of agents or posting special entry and exit procedures will be specified in the BUA.

10. An effective integrated pest management program is required.

11. The laboratory supervisor must ensure that laboratory personnel receive appropriate training regarding their duties, the necessary precautions to prevent exposures, and exposure evaluation procedures. Personnel must receive annual updates or additional training when procedural or policy changes occur. Personal health status may impact an individual's susceptibility to infection, or ability to receive immunizations or prophylactic interventions. Therefore, all laboratory personnel and particularly women of childbearing age should be provided with information regarding immune competence and conditions that may

predispose them to infection. Individuals who have these conditions should be encouraged to identify themselves to the institution's health care provider for appropriate counseling and guidance.

C.3.2 BL2 Special Practices

1. All persons entering the laboratory must be advised of the potential hazards and meet any specific entry/exit requirements as communicated through laboratory door postings or other means. Minimum biosafety hazard advisories include a required biohazard symbol posted at the entrance to the BL2 laboratory. Any additional biosafety requirements necessary for advising and protecting personnel entering and exiting the area will be specified in the BUA based on a risk assessment.

2. Laboratory personnel must be provided with medical surveillance and offered appropriate immunizations for agents handled or potentially present in the laboratory.

3. When appropriate, a baseline serum sample should be stored.

4. A laboratory-specific biosafety manual must be prepared and adopted as policy, and must be available and accessible.

5. The laboratory supervisor must ensure that laboratory personnel demonstrate proficiency in standard and special microbiological practices before working with BL2 agents.

6. Potentially infectious materials must be placed in a durable, leak-proof container during collection, handling, processing, storage, or transport within a facility.

7. Laboratory equipment should be decontaminated on a routine basis and after spills, splashes, or other potential contamination.

    a. Spills involving infectious materials must be contained, decontaminated, and cleaned by staff properly trained and equipped to work with infectious material.

    b. Equipment must be decontaminated before repair, maintenance, or removal from the laboratory.

8. Incidents that may result in exposure to infectious materials must be immediately evaluated and treated according to procedures described in the laboratory biosafety safety manual. All such incidents must be reported to the laboratory supervisor. Medical evaluation, surveillance, and treatment should be provided. Appropriate records should be maintained.

9. Animals and plants not associated with the work being performed must not be permitted in the laboratory.

10. All procedures involving the manipulation of infectious materials that may generate an aerosol should be conducted within a BSC or other physical containment device.

C.3.3 BL2 Safety Equipment (Primary Barriers and Personal Protective Equipment)

1. Properly maintained BSCs (preferably Class II), other appropriate personal protective equipment, or other physical containment devices must be used whenever:

    a. Procedures with a potential for creating infectious aerosols or splashes are conducted. These may include pipetting, centrifuging, grinding, blending, shaking, mixing, sonicating, opening containers of infectious materials, inoculating animals intranasally, and harvesting infected tissues from animals or eggs.

    b. High concentrations or large volumes of infectious agents or organisms containing recombinant DNA are used. Such materials may be centrifuged in the open laboratory using sealed rotor heads or centrifuge safety cups. In this case, the rotor heads and centrifuge cups must be opened inside a BSC.

2. Protective laboratory clothing (e.g., coats, gowns, smocks, or uniforms) designated for laboratory use should be worn to prevent contamination of personal clothing and must be worn when working at BL2 or when working with RG2 or other hazardous materials. Remove protective clothing before leaving for nonlaboratory areas (e.g., cafeteria, library, administrative offices). Dispose of protective clothing appropriately, or deposit it for laundering services provided by an LBNL subcontractor. Laboratory clothing must not be taken home.

3. Eye protection must be worn in the laboratory. Eye and face protection (goggles, mask, face shield, or other splatter guard) must be used when it is anticipated that splashes, sprays, splatters, or droplets of infectious or other hazardous materials may be generated and could contaminate the eyes, nose, or mouth (e.g., when RG2 microorganisms must be handled outside the BSC or containment device). This eye and face protection must be disposed of with other contaminated laboratory waste or decontaminated before reuse.

4. Gloves must be worn to protect hands from exposure to hazardous materials. Glove selection should be based on an appropriate risk assessment. Alternatives to latex gloves should be available. Gloves that were used in BL1 and BL2 work must not be worn outside the laboratory. In addition, BL2 laboratory workers should:

    a. Change gloves when contaminated, when their integrity has been compromised, or when otherwise necessary. Wear two pairs of gloves when appropriate.

    b. Remove gloves and wash hands when work with hazardous materials has been completed and before leaving the laboratory.

    c. Do not wash or reuse disposable gloves. Dispose of used gloves with other contaminated laboratory waste. Hand washing protocols must be rigorously followed.

5. Eye, face, and respiratory protection should be used in rooms containing infected animals, as determined by the risk assessment.

C.3.4 BL2 Laboratory Facilities (Secondary Barriers)

1. Laboratory areas should have doors for access and ventilation control, and the doors should be self-closing and have locks designed in accordance with LBNL standards.

2. Laboratories must have a sink for hand washing. The sink may be manually, hands-free, or automatically operated. The sink should be located near the exit door.

3. The laboratory should be designed so that it can be easily cleaned and decontaminated. Carpets and rugs in laboratories are not permitted.

4. Laboratory furniture must be capable of supporting anticipated loads and uses. Spaces between benches, cabinets, and equipment should be accessible for cleaning.

    a. Benchtops must be impervious to water and resistant to heat, organic solvents, acids, alkalis, and other chemicals.

    b. Chairs used in laboratory work must be covered with a nonporous material that can be easily cleaned and decontaminated with appropriate disinfectant.

5. Laboratory windows that open to the exterior are not recommended. However, if a laboratory does have windows that open to the exterior, they must be fitted with screens.

6. BSCs must be installed so that fluctuations of the room air supply and exhaust do not interfere with proper operations. BSCs should be located away from doors, windows that can be opened, heavily traveled laboratory areas, and other possible airflow disruptions.

7. Vacuum lines should be protected with high-efficiency particulate air (HEPA) filters or their equivalent. Filters must be replaced as needed. Liquid disinfectant traps may be required.

8. An eyewash station must be readily available.

9. There are no specific requirements on ventilation systems. However, planning of new facilities should consider mechanical ventilation systems that provide an inward flow of air without recirculation to spaces outside of the laboratory.

10. HEPA filtered exhaust air from a Class II BSC can be safely recirculated back into the laboratory environment if the cabinet is tested and certified at least annually and operated according to manufacturer's recommendations. BSCs can also be connected to the laboratory exhaust system by either a thimble (canopy) connection or a direct (hard) connection. Provisions to ensure proper safety cabinet performance and air system operation must be verified.

11. A method for decontaminating all laboratory wastes should be available in the facility (e.g., autoclave, chemical disinfection, incineration, or other validated decontamination method).

Appendix D

Good Microbiological Practice

D.1 Introduction and Scope

This appendix describes 1) customary principles of good microbiological practice (GMP), and 2) explains the differences between GMP and laboratory biosafety practices defined by the Centers for Disease Control and Prevention (CDC) and the National Institutes of Health (NIH) and provided in Appendix C (Laboratory Biosafety Level 1 and 2 Criteria) of this manual. These GMP principles are guidelines that may be used to control the biosafety and research quality aspects of laboratory work. These guidelines are not biosafety requirements unless other sections of this manual describe them as biosafety requirements.

The first and most important element of control for research product protection and laboratory containment is strict adherence to 1) GMP, and 2) standard microbiological practices and special practices. These sets of practices have different main objectives, but include many overlapping practices and secondary objectives. Both sets of practices should be used when conducting work.

- **Good Microbiological Practice (GMP)** is aseptic techniques and other good microbiological practices that are not uniformly defined but are necessary to prevent contamination of the laboratory with the agents being handled and contamination of the work with agents from the environment. GMP is used to keep the agents being handled inside their primary containers without any other organisms getting in and contaminating the research materials. The main objective of GMP is to ensure that contamination does not affect the research results.

- **Standard microbiological practices** and **special practices** are defined by the CDC and NIH, discussed in Section 4.1, and listed in detail in Appendix C of this manual. Standard microbiological practices and special practices are used much like GMP to keep agents inside their primary containers. However, the main objective of these practices is to provide safety controls needed to protect workers and the environment from contamination in the event that the agents are accidentally released from their primary container.

D.2 Good Microbiological Practice

GMP involves the use of aseptic techniques and other good microbiological practices. These practices and techniques achieve two objectives:

- Prevent handled organisms from contaminating the laboratory, and
- Prevent organisms in a laboratory environment from contaminating the work.

Both objectives are important, but the first objective is primarily important for the safety of the worker, while the second objective is mostly important for the quality of the research.

The principles of GMP should generally be applied to all types of work involving microorganisms and tissue cultures, regardless of containment level.

D.2.1 Aseptic Technique

An aseptic technique is a procedure used to grow a microorganism or culture of interest in a clean micro-environment isolated from the outside world. This micro-environment is usually some sort of culture or holding container such as a flask, bottle, or petri dish. The organisms or cells can either be on a solid agar medium or be suspended in a broth, diluent, or other fluid medium.

Examples of aseptic techniques include ensuring all components of the system are sterile prior to use (e.g., container interior, growth medium, and any items used in manipulation) and using special care and techniques to avoid cross-contamination during the inoculation, incubation, and processing steps. They also include:

- Keeping the container closed except for the minimum time required to introduce or remove materials.
- Holding open containers at an angle whenever possible to prevent contaminants from entering the container.
- Protecting sterile containers from contamination, and working with these containers inside a biosafety cabinet (BSC). When working outside a BSC, a Bunsen burner may be used to flame the opening of the container whenever tops are removed (i.e., passing the opening quickly through the Bunsen flame). The upwards current of hot air created by the Bunsen burner prevents contaminated air or particles from dropping into the culture container when the lid is open.
- Using manipulation techniques that minimize the possibility of cross-contamination (e.g., opening lids with the little finger so that tops are not put down on the work surface).
- Ensuring that all tools (e.g., pipette tips or loops) or other items that may come in contact with the culture are sterile and not contaminated by casual contact with the bench, fingers, or outside of the bottle. Also ensuring that these tools are disposed of or decontaminated immediately after use.

In addition to aseptic technique, GMP includes a wide range of other working methods that minimize the cross-contamination of the work and workplace. Examples of these methods are provided in the remaining sections of this appendix.

D.2.2 Personal Hygiene and Dress

- Wash hands prior to and following manipulations of organisms or cultures and whenever contamination is suspected.
- Wear personal protective equipment (PPE) to protect the worker and to prevent research materials from contamination. Change gloves when contaminated. Routinely clean lab coats or throw away disposable coats.
- Tie back or confine loose or long hair.
- Do not touch the skin, face, or unclean or nonsterile surfaces.
- Keep fingernail tips at a length of one-quarter inch or shorter.

D.2.3 Area Cleanliness and Organization

Keep the laboratory and work area clean and organized, such as in the following examples:

- Keep only items necessary for the task in progress on the bench or in the BSC. This practice avoids unnecessary clutter that may collect contaminants, prevent surface disinfection and spill cleanup, and increase the possibility of things getting knocked over.
- Plan and lay out work so that everything needed for a procedure is ready to be handled in a logical order. This practice should allow the worker to sit at the BSC or bench and handle the items efficiently using aseptic techniques.
- Use appropriate chemical antimicrobials (e.g., disinfectants) and decontamination procedures. See Appendix F of this manual.
- Wash hands and disinfect work surfaces before and after work.
- Immediately clean spills, and then disinfect the work surface and wash hands.
- Organize the work area when work is complete.
- Avoid putting items on the floor. This practice allows the cleanliness of the floor to be viewed, allows all parts of the floor to be cleaned routinely, eases spill cleanup, and prevents tripping hazards.
- Routinely clean water baths to minimize microbial contamination of the water.
- Routinely clean laboratory surfaces such as open shelving, benchtops, windowsills, and items on them to prevent accumulation of dust and debris. Store infrequently used items in cabinets and drawers.
- Routinely clean floors and difficult-to-access areas to prevent buildup of dust and debris.
- Routinely clean sink faucets and basins.
- Identify areas and systems in the laboratory and support areas (e.g., wash and autoclave area) for storage and staging of dirty, contaminated, clean, and sterilized items that are being stored, used, or processed for eventual reuse. Ensure everyone understands and follows the system.
- Periodically review items stored in refrigerators and freezers and on shelves and benches. Dispose of items that are no longer needed.

D.2.4 Biosafety Cabinets and Airborne Contamination

- Use a BSC when needed to protect biological research materials and when procedures may generate biohazardous aerosols. See Appendix E, Section E.3 (Biosafety Cabinet Work Practices and Procedures) for additional GMP and containment work practices related to work in a BSC.
- Minimize personnel traffic and unnecessary movements around the work area or BSC. Such movements cause area air turbulence that may transport contaminants into the work area and onto the biological materials that need protection. Such movements also disturb clean laminar airflows inside BSCs responsible for containing aerosols and protecting biological materials.

D.2.5 Manipulation Techniques for Minimizing Aerosols

Manipulation techniques should be used that minimize the possibility of producing aerosols. Examples include:

- Mixing by gentle rolling and swirling rather than vigorous shaking (to avoid frothing).
- Pipetting by putting the tip into a liquid or onto a surface prior to gently ejecting the pipette contents (to avoid bubbling and splashing).
- Placing containers in very close proximity to each other when transferring liquids between them (to avoid drops that fall and splash).

- Allowing loops to cool down after incineration or flaming before using the loop (to avoid sizzling).
- Not overfilling centrifuge tubes (to avoid leakage into centrifuge).
- Slowly removing tube caps or stoppers.
- Not popping caps off of tubes.
- Carrying and storing cultures (e.g., bottles and plates) in racks and spill-proof containers (to prevent dropping and breakage).

D.2.6 Worker Qualifications

Workers who handle microorganisms and cultures should have sufficient technical competence, training, and experience in GMP and containment practices. In addition, workers should use GMP and biosafety containment in anticipation of unexpected hazards when handling microorganisms and cultures (including Risk Group 1). Workers should conservatively approach their safety by assuming, for example, that an unexpected pathogen may be present or contaminate the culture; a pathogen may be unintentionally cultured; the disease potential of the agent may be altered under laboratory conditions; or exposure to an RG1 agent may cause an opportunistic infection.

D.2.7 Microbial Contamination Checks

Routine microbial contamination checks should be incorporated into protocols and undertaken at various stages of experiments. Examples of contamination checks include:

- Taking a loopful of fluid from the vessel and plating (or streaking) it out onto a nonselective solid nutrient medium to look for single colonies.
- Incubating culture samples at a suitable temperature (usually 30°C) to allow growth of contaminants originating from the general environment and human sources.
- After incubation, examining plates for evidence of any contamination as indicated by colony types.

The purity of a liquid culture can also be obtained by microscopic examination. This is done by placing a loopful of the culture on a microscope slide. The slide is then examined wet either by phase contrast microscopy, or by fixed or Gram staining. Contaminant organisms should be instantly and clearly visible.

Contamination checks are particularly useful in evaluating GMP competence. Workers with poor aseptic techniques will have frequent contamination problems, while workers skilled in GMP will have problems only occasionally. It is important to recognize that poor practices not only result in contaminated cultures, but may also result in spreading biological materials and contamination to work surfaces and workers in the laboratory.

D.3 References

University of Edinburgh, Health and Safety, "Good Microbiological Practice and Containment," Web page information from the Health and Safety Department, August 2003.

Appendix E

Biosafety Cabinets

E.1 Introduction and Scope

Biological safety cabinets or **biosafety cabinets (BSCs)** are hoods with high-efficiency particulate air (HEPA) filters that provide personnel, environmental, and product protection when appropriate practices and procedures are followed. Key BSC information and requirements are summarized in Section 5.6.4.2. This appendix provides the following information and requirements on BSCs:

- Classifications
- Work practices and procedures
- Decontamination
- Installation and engineering
- Testing and certification

Information in this appendix primarily contains information that was excerpted and adapted from Appendix A (Primary Containment for Biohazards: Selection, Installation, and Use of Biological Safety Cabinets) of *Biosafety in Microbiological and Biomedical Laboratories* (BMBL), fifth edition, and minimally reiterates LBNL policies presented in Section 5.6.4.2 (Hoods and Biosafety Cabinets) of this manual.

E.2 Biosafety Cabinet Classifications

Three primary types of BSCs have been developed to meet varying research and clinical needs. These primary BSC types are designated as Class I, II, and III. Class II BSCs are also further subdivided into different Class II types. Tables E-1 and E-2 summarize the similarities and differences in the types of protection and physical characteristics of different classes of BSCs. The sections following these tables summarize and illustrate the characteristics of BSC classes used at LBNL. This information should be used in BSC selection and risk assessment.

Table E-1
Protection Offered by Classes of Biosafety Cabinets

Biological Risk Assessed	Protection Provided			
	Personnel	Product	Environmental	BSC Class
Biosafety Level (BL) 1 to 3	Yes	No	Yes	I
BL1 to 3	Yes	Yes	Yes	II (A1, A2, B1, B2)
BL4	Yes	Yes	Yes	III II - when used in room with suit

Source: adapted from BMBL, fifth edition, Appendix A, Table 1.

Table E-2
Characteristics of Biosafety Cabinet Classes

BSC Class, Type	Face Velocity (fpm)	Airflow Pattern	Applications	
			Nonvolatile Toxic Chemicals and Radionuclides	Volatile Toxic Chemicals and Radionuclides
I	75	In at front through HEPA to the outside or into the room through HEPA (Figure 1)	Yes	When exhausted outdoors [1,2]
II, A1	75	70% recirculated to the cabinet work area through HEPA; 30% balance can be exhausted through HEPA back into the room or to outside through a canopy unit	Yes (minute amounts)	No
II, A2	100	Similar to II, A1, but has 100 linear fpm intake air velocity and plenums are under negative pressure to room (Figure 2); exhaust air can be ducted to outside through a canopy unit (Figure 3)	Yes	When exhausted outdoors (formerly "B3") (minute amounts) [1,2]
II, B1	100	30% recirculated, 70% exhausted. Exhaust cabinet air must pass through a dedicated duct to the outside through a HEPA filter (Figure 4)	Yes	Yes (minute amounts)[1,2]
II, B2	100	No recirculation; total exhaust to the outside through a HEPA filter	Yes	Yes. (small amounts) [1,2]
III	N/A	Supply air is HEPA filtered. Exhaust air passes through two HEPA filters in series and is exhausted to the outside via a hard connection (Figure 5)	Yes	Yes (small amounts) [1,2]

Footnotes:
1. Installation may require a special duct to the outside, an in-line charcoal filter, and a spark-proof (explosion-proof) motor and other electrical components in the cabinet. Discharge of a Class I or Class II Type A2 cabinet into a room should not occur if volatile chemicals are used.
2. In no instance should the chemical concentration approach the lower explosion limits of the compounds.

Source: adapted from BMBL, fifth edition, Appendix A, Table 2.

E.2.1 Class I Biosafety Cabinet

The Class I BSC provides personnel and environmental protection, but no product protection. It is similar in air movement to a chemical fume hood, but has a HEPA filter in the exhaust system to protect the environment. Figure 1 shows a diagram of a Class I BSC.

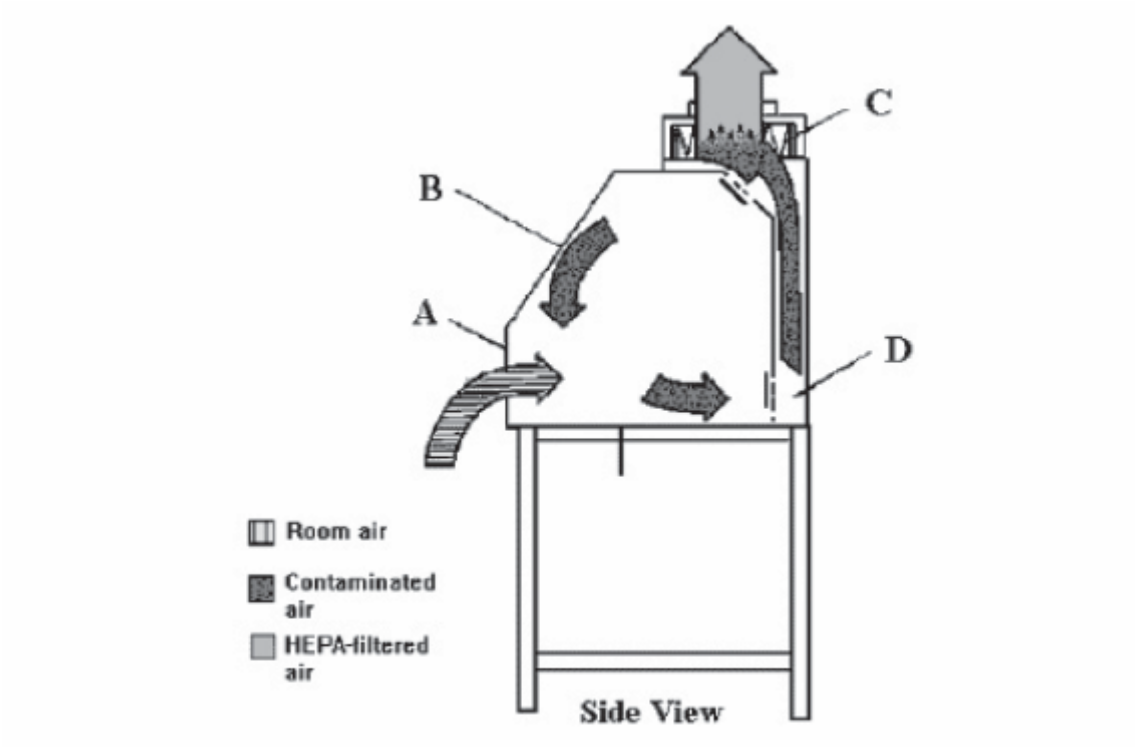

Figure 1. Class I BSC. (A) front opening, (B) sash, (C) exhaust HEPA filter, and (D) exhaust plenum. Note: The cabinet needs to be hard connected to the building exhaust system if toxic vapors are to be used. *Source: BMBL, fifth edition, Appendix A.*

E.2.2 Class II Biosafety Cabinet

Class II BSCs (Types A1, A2, B1 and B2) provide personnel, environmental, and product protection. Airflow is drawn into the front grille of the cabinet, providing personnel protection. In addition, the downward laminar flow of HEPA-filtered air provides product protection by minimizing the chance of cross-contamination across the work surface of the cabinet. Because cabinet exhaust air is passed through a certified HEPA filter, the exhaust air is particulate-free (environmental protection), and may be recirculated to the laboratory (i.e., Type A1 and A2 BSCs only) or discharged from the building via the exhaust duct system and a canopy connection. Exhaust air from Types B1 and B2 BSCs must be discharged to the outdoors via a hard duct connection. Figure 2 shows a diagram of a Class II Type A2 BSC, which is the most common type of BSC at LBNL. Figure 3 shows a diagram of a canopy (or thimble) unit that is normally required when connecting a Class II Type A1 or A2 BSC to an exhaust duct system. Figure 4 shows a Class II, Type B1 BSC, which is also used at LBNL. Installation of a Class II, Type B1 BSC typically requires a hard duct connection to the exhaust system without a canopy or thimble unit connection.

HEPA filters are effective at trapping particulates and thus infectious agents but do not capture volatile chemicals or gases. Only Type A2 exhausted or Types B1and B2 BSCs exhausting to the outside should be used when working with volatile toxic chemicals, but amounts must be limited. See Table 2 for additional information.

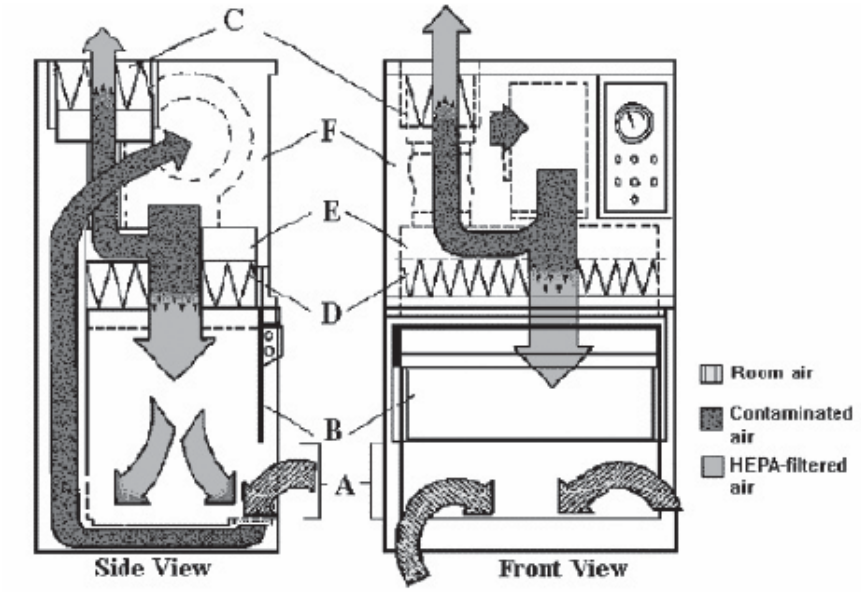

Figure 2. Class II, Type A2 BSC. Tabletop model. (A) front opening, (B) sash, (C) exhaust HEPA filter, (D) supply HEPA filter, (E) positive-pressure common plenum, (F) negative-pressure plenum. Unless it is connected to the building exhaust system, the Class II, Type A2 BSC is not equivalent to what was formerly called a Class II, Type B3 BSC. Note: The Class II, Type A2 BSC should be canopy connected to the exhaust system. *Source: adapted from BMBL, fifth edition, Appendix A.*

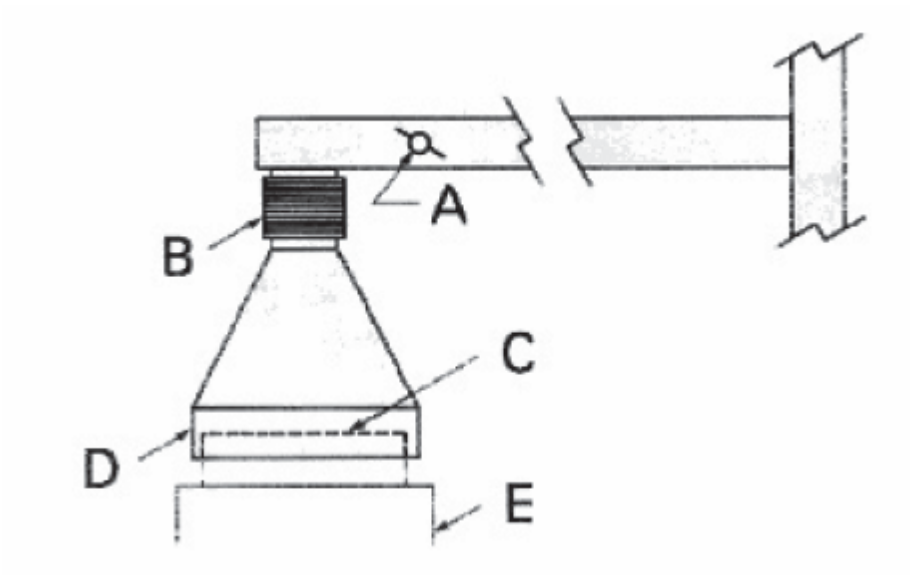

Figure 3. Canopy (Thimble) Unit. Canopy (thimble) units for connecting a Class II, Type A1 or A2 BSC to the exhaust duct system. (A) balancing damper, (B) flexible connector to exhaust system, (C) cabinet exhaust HEPA filter housing, (D) canopy unit, (E) BSC. Note: There is a one-inch gap between (D) the canopy unit and (E) the exhaust filter housing through which room air is exhausted. *Source: adapted from BMBL, fifth edition, Appendix A.*

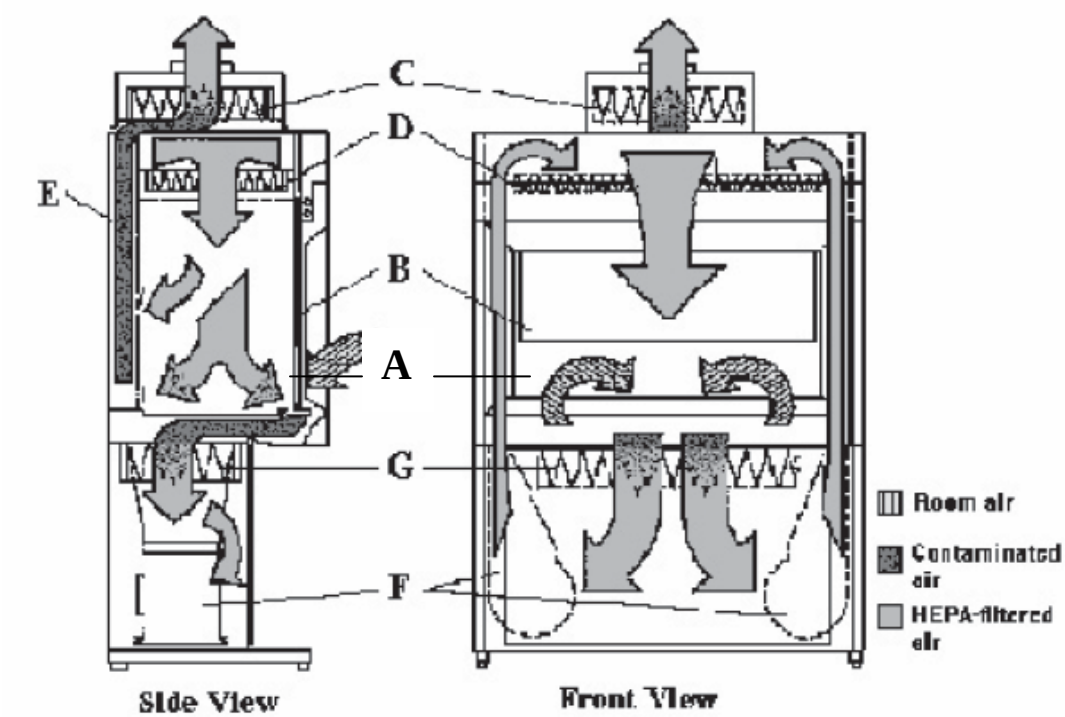

Figure 4. Class II, Type B1 BSC (classic design). (A) Front opening, (B) sash, (C) exhaust HEPA filter, (D) supply HEPA filter, (E) negative-pressure dedicated exhaust plenum, (F) blower, (G) additional HEPA filter for supply air. Note: The cabinet exhaust needs to be hard connected to the building exhaust system. *Source: BMBL, fifth edition, Appendix A.*

E.2.3 Class III Biosafety Cabinet

A standard Class III BSC (Figure 5) is designed for working with highly infectious microbiological agents and conducting hazardous operations. It is a gas-tight enclosure with a nonopening view window that provides maximum protection for the environment and the worker. Access for passage of materials into the cabinet is through a chemical dunk tank accessible through the cabinet floor, or a double-door pass-through box (e.g., an autoclave) that can be decontaminated between uses. Reversing that process allows materials to be removed from the Class III BSC safely. Both supply and exhaust air pass through a HEPA filter on a Class III cabinet. Exhaust air must pass through two HEPA filters, or a HEPA filter and an air incinerator, before discharge to the outdoors. Airflow is maintained by a dedicated, independent exhaust system exterior to the cabinet, which keeps the cabinet under negative pressure (minimum pressure of 0.5 inches of water gauge). Some Class III BSCs may not have all of these controls, based on the risk assessment conducted (e.g., types of materials and manner of work).

Long, heavy-duty rubber gloves are attached in a gas-tight manner to ports in the cabinet and allow direct manipulation of the materials isolated inside and prevent the user's direct contact with the hazardous materials. Depending on the design of the cabinet, the supply HEPA filter provides particulate-free, albeit somewhat turbulent, airflow within the work environment. Laminar airflow is not a characteristic of a Class III cabinet.

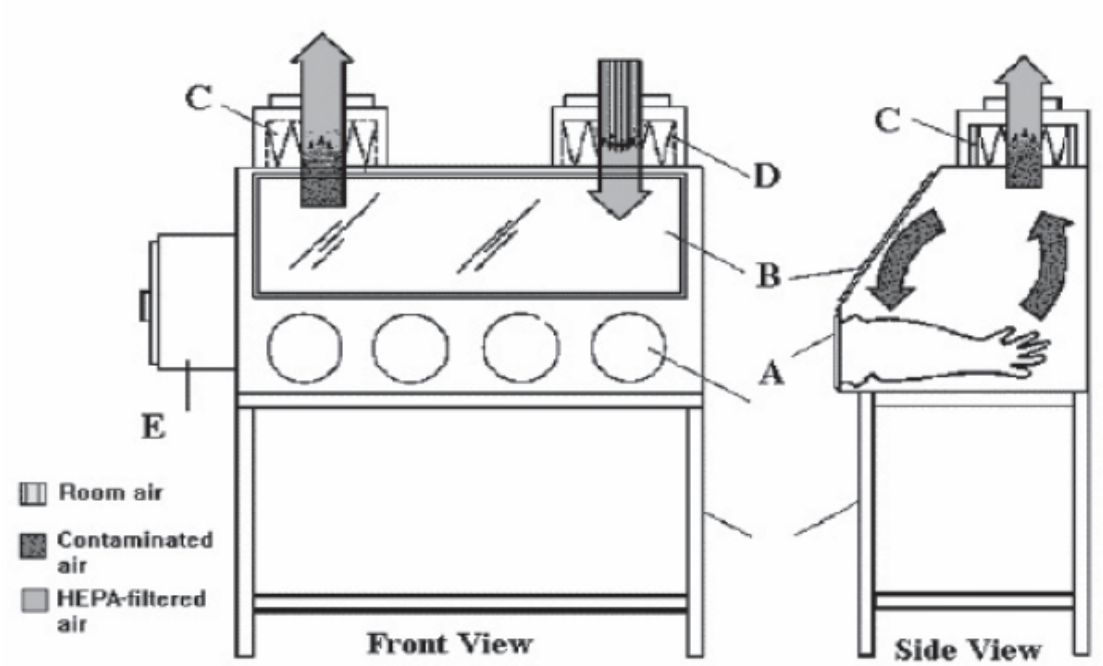

Figure 5. Class III BSC. (A) Glove ports with O-ring for attaching arm-length gloves to cabinet, (B) sash, (C) exhaust HEPA filter, (D) supply HEPA filter, (E) double-ended autoclave or pass-through box. The cabinet exhaust needs to be hard connected to an independent dedicated exhaust system. The exhaust air must be double HEPA filtered or HEPA filtered and incinerated. *Source: adapted from BMBL, fifth edition, Appendix A.*

E.2.4 Clean Benches (Not BSCs)

Horizontal and vertical laminar flow "clean benches" are shown in Figures 6 and 7. These units may provide protection for the product, but are not considered safety hoods or BSCs and must not be used for infectious or toxic materials or when a hood or BSC is needed to protect the worker.

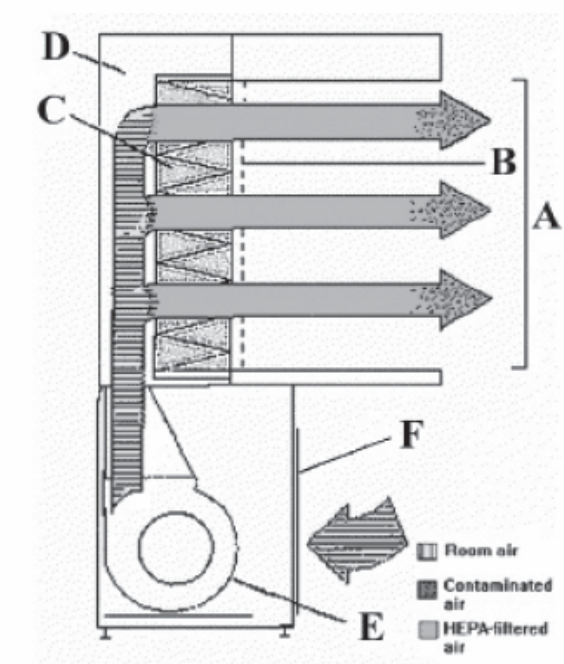

Figure 6. Horizontal Laminar Flow "Clean Bench." (A) Front opening, (B) grille, (C) supply HEPA filter, (D) plenum, (E) blower, (F) grille. *Source: BMBL, fifth edition, Appendix A.*

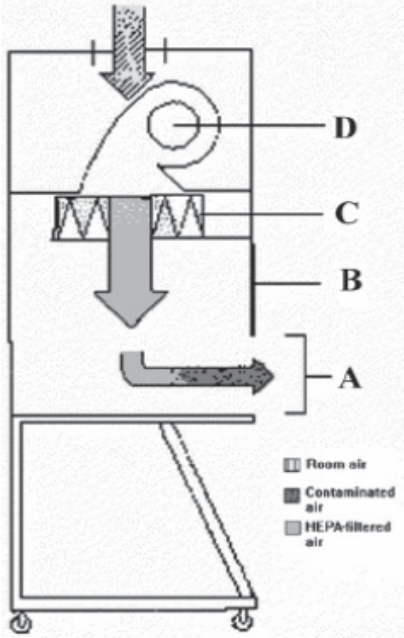

Figure 7. Vertical Laminar Flow "Clean Bench." (A) Front opening, (B) sash, (C) supply HEPA filter, (D) blower. *Source: BMBL, fifth edition, Appendix A.*

E.3 Biosafety Cabinet Work Practices and Procedures

This section discusses in detail standard work practices and procedures for investigators working in a Class II BSC. In general, these practices and procedures are important for protection of the worker or the product, but the importance of each practice or procedure for the safety of the worker often depends on the nature of biological materials and the work being conducted. A shorter list of key BSC work practices and procedures is provided in Appendix D.

E.3.1 Preparing for BSC Work

This section discusses preparing for work within a Class II BSC.

Air Current Disruptions. Preparing a written checklist of materials necessary for a particular activity and placing necessary materials in the BSC before beginning work minimizes the number and extent of air curtain disruptions compromising the fragile air barrier of the cabinet. The rapid movement of a worker's arms in a sweeping motion into and out of the cabinet will disrupt the air curtain and compromise the partial containment barrier provided by the BSC. Moving arms slowly in and out and perpendicular to the face while opening the cabinet will reduce this risk. Other personnel activities in the room (e.g., rapid movements near the face of the cabinet, walking traffic, room fans, open/closing room doors, etc.) may also disrupt the cabinet air barrier.

Personal Protective Equipment (PPE). Eye protection and laboratory coats buttoned over street clothing must be worn. Latex, vinyl, nitrile, or other suitable gloves must be worn to provide hand protection. Higher levels of PPE can be included as determined by an individual risk assessment. For example, a solid front, back-closing laboratory gown provides better protection of personal clothing than a traditional laboratory coat and is a recommended practice at BL3.

Body and Material Positioning. Before beginning work, the BSC user should adjust the stool height so that his/her face is above the front opening. Manipulation of materials should be delayed for approximately one minute after placing the hands/arms inside the cabinet. This allows the cabinet to stabilize, the user to "air sweep" his or her hands and arms, and to allow time for turbulence reduction. When the user's arms rest flatly across the front grille, the arms may occlude the grille opening, and room air laden with particles may flow directly into the work area rather than being drawn down through the front grille. Raising the arms slightly will alleviate this problem. The front grille must not be blocked by towels, research notes, discarded plastic wrappers, pipetting devices, etc. All operations should be performed on the work surface at least four inches from the front grille. If there is a drain valve under the work surface, it should be closed prior to beginning work in the BSC.

Materials or equipment placed inside the cabinet may cause disruption of the airflow, resulting in turbulence, possible cross-contamination and/or breach of containment. Extra supplies (e.g., additional gloves, culture plates or flasks, culture media) should be stored outside the cabinet. Only the materials and equipment required for immediate work should be placed in the BSC.

Purge and Decontamination. If the cabinet has been shut down, the blowers should be operated at least four minutes before beginning work to allow the cabinet to "purge." This purge will remove any suspended particulates in the cabinet. The work surface, the interior walls (*except* the supply filter diffuser), and the interior surface of the window should be wiped with 70%

ethanol (EtOH), a 1:100 dilution of household bleach (i.e., 0.05% sodium hypochlorite), or other disinfectant as determined by the investigator to meet the requirements of the particular activity. When bleach is used, a second wiping with sterile water is needed to remove the residual chlorine, which may eventually corrode stainless steel surfaces. Wiping with nonsterile water may recontaminate cabinet surfaces, a critical issue when sterility is essential (e.g., maintenance of cell cultures).

Similarly, the surfaces of all materials and containers placed into the cabinet should be wiped with 70% EtOH to reduce the introduction of contaminants to the cabinet environment. This simple step will reduce the introduction of mold spores and thereby minimize contamination of cultures. The further reduction of microbial load on materials to be placed or used in BSCs may be achieved by periodic decontamination of incubators and refrigerators.

E.3.2 Material Placement inside the BSC

This section covers placement of materials inside the BSC.

Surface Towels. Plastic-backed absorbent towels can be placed on the work surface but *not* on the front or rear grille openings. The use of towels facilitates routine cleanup and reduces splatter and aerosol generation during an overt spill. It can be folded and placed in a biohazard bag or other appropriate receptacle when work is completed.

Inside Materials and Sash. All materials should be placed as far back in the cabinet as practical, toward the rear edge of the work surface and away from the front grille of the cabinet (Figure 8). Similarly, aerosol generating equipment (e.g., vortex mixers, tabletop centrifuges) should be placed toward the rear of the cabinet to take advantage of the split in downward laminar air flow to the front and rear grilles as the air approaches the work surface. Bulky items such as biohazard bags, discard pipette trays, and vacuum collection flasks should be placed to one side of the interior of the cabinet. If placing those items in the cabinet requires opening the sash, make sure that the sash is returned to its original position before work is initiated. The correct sash position (usually 8 or 10 inches above the base of the opening) should be indicated on the front of the cabinet. On most BSCs, an audible alarm will sound if the sash is in the wrong position while the fan is operating.

Practices Do and Do Not Interfere with BSC Operation. Certain common practices interfere with the operation of the BSC. The biohazard collection bag should not be taped to the outside of the cabinet. Upright pipette collection containers should not be used in BSCs nor placed on the floor outside the cabinet. The frequent inward/outward movement needed to place objects in these containers is disruptive to the integrity of the cabinet air barrier and can compromise both personnel and product protection. Only horizontal pipette discard trays containing an appropriate chemical disinfectant should be used within the cabinet. Furthermore, potentially contaminated materials should not be brought out of the cabinet until they have been surface decontaminated. Alternatively, contaminated materials can be placed into a closable container for transfer to an incubator, autoclave, or another part of the laboratory.

E.3.3 Operations within a Class II BSC

Splatters and Aerosols. Many procedures conducted in BSCs may create splatter or aerosols. Good microbiological techniques should always be used when working in a BSC. For example, techniques used to reduce splatter and aerosol generation will also minimize the potential for personnel exposure to infectious materials manipulated within the cabinet. Class II cabinets are designed so that horizontally nebulized spores introduced into the cabinet will be captured by the downward flowing cabinet air within 14 inches of travel. Therefore, as a general rule of thumb, keeping clean materials at least one foot away from aerosol-generating activities will minimize the potential for cross-contamination.

Work Flow. The work flow should be from "clean to dirty" (see Figure 8). Materials and supplies should be placed in the cabinet in such a way as to limit the movement of "dirty" items over "clean" ones. Several measures can be taken to reduce the chance for cross-contamination of materials when working in a BSC. Opened tubes or bottles should not be held in a vertical position. Investigators working with petri dishes and tissue culture plates should hold the lid above the open sterile surface to minimize direct impaction of downward air. Bottle or tube caps should not be placed on the towels. Items should be recapped or covered as soon as possible.

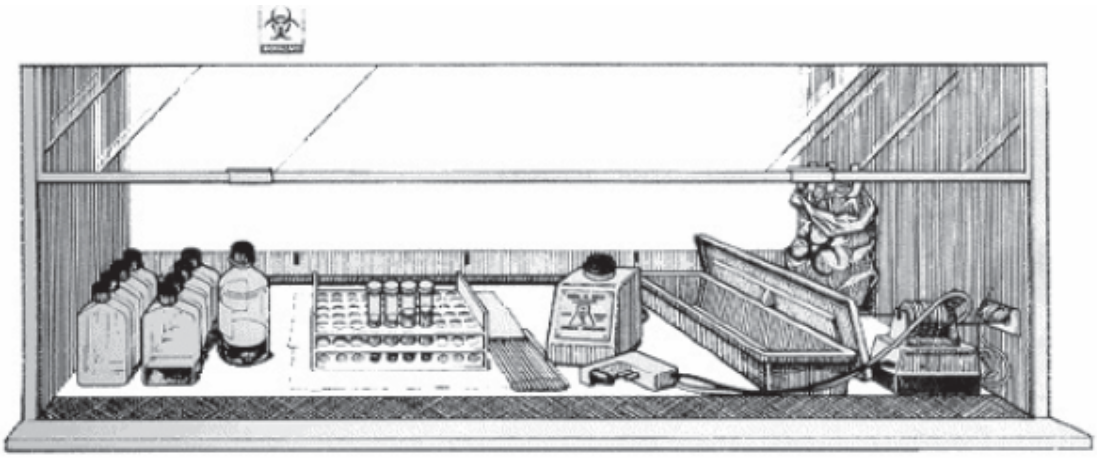

Figure 8. Typical Work Layout Inside a BSC. Shown above is a typical layout for working “clean to dirty” within a Class II BSC. Clean cultures (left) can be inoculated (center); contaminated pipettes can be discarded in the shallow pan, and other contaminated materials can be placed in the biohazard bag (right). This arrangement is reversed for left-handed persons. *Source: adapted from BMBL, fifth edition, Appendix A.*

Burners and Open Flames. Open flames are not required in the near-microbe-free environment of a BSC. On an open bench, flaming the neck of a culture vessel will create an upward air current, which prevents microorganisms from falling into the tube or flask. An open flame in a BSC, however, creates turbulence that disrupts the pattern of HEPA-filtered air being supplied to the work surface and may cause fires. When deemed absolutely necessary, touch-plate microburners equipped with a pilot light to provide a flame on demand should be used. These burners will minimize internal cabinet air disturbance, heat buildup, and fire risk. The burner must be turned off when work is completed. Small electric "furnaces" are also available for decontaminating bacteriological loops and needles, and are preferable to an open flame inside the BSC. Disposable or recyclable sterile loops should be used whenever possible.

A fire inside a BSC occurred when the gas rubber hose connected to a Touch-O-Matic Bunsen burner melted and gas in the hose ignited. Brookhaven National Laboratory, Lessons Learned 2002-CHBNL-MED-0003 (July 23, 2007).

BSC fire. Source: Stanford University, Use of open flames in Cabinets/Tissue Culture Hoods (May 29, 2003).

The following are examples of burners and heaters that could be used in a biosafety cabinet if other sterile techniques are not feasible:

- **Burner: Touch-O-Matic Bunsen Burner**
  Simply depress ON/OFF platform with side of hand to release gas stream, and continuous pinpoint pilot light ignites gas to produce full flame. Release platform and flame goes out to conserve gas. To produce continuous flame, depress platform, then turn it slightly; reverse process to turn off flame.

- **Heater: Bacti-Cinerator**
  Infrared heat chamber sterilizes loops, needles, and culture tubes in 5 to 7 seconds. Suitable for anaerobic procedures in chambers and hoods. Electric heat source eliminates hazards from gas and open flames. Within 6 minutes of activation, the interior of the ceramic cone reaches an optimum sterilizing temperature of 815°C (1,500°F). A prominent light indicates when the unit is in operation. Weighted cast aluminum stand includes handy spaces for storage of six inoculating loop handles. Electrical: 120V, 50/60Hz. UL listed. Unit is not intended for use with scalpels, forceps, or sharp instruments.

Touch-O-Matic Bunsen Burner.
Source: Fisher Scientific (May 2010).

Bacti-Cinerator.
Source: VWR (May 2010).

Aspirator Bottles or Suction Flasks. Aspirator bottles or suction flasks should be connected to an overflow collection flask containing appropriate disinfectant, and to an in-line HEPA or equivalent filter (see Figure 9). This combination will provide protection to the central building vacuum system or vacuum pump, as well as to the personnel who service this equipment. Inactivation of aspirated materials can be accomplished by placing sufficient chemical decontamination solution into the flask to inactivate the microorganisms as they are collected. Once inactivation occurs, liquid materials can be disposed of as noninfectious waste.

Aspirator bottles that collect Risk Group (RG) 1 or RG2 biological materials that do not contain RG2 infectious agents may be placed outside the BSC as long as the aspirator bottles are placed inside a secondary spill tray.

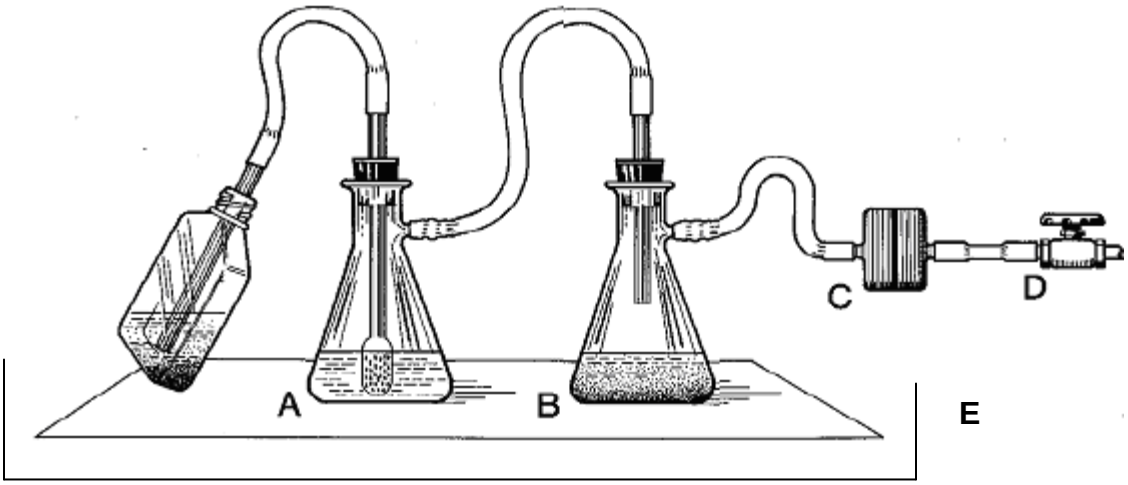

Figure 9. Aspiration and House Vacuum System Protection. Shown below is one method to protect a house vacuum system during aspiration of infectious fluids. The left suction flask (A) is used to collect the contaminated fluids into a suitable decontamination solution; the right flask (B) serves as a fluid overflow collection vessel. An in-line HEPA filter (C) is used to protect the vacuum system (D) from aerosolized microorganisms. A spill tray (E) should be used when the flasks are outside the BSC. *Source: adapted from BMBL, fifth edition, Appendix A.*

E.4 Biosafety Cabinet Decontamination and Moves

E.4.1 Cabinet Surface Decontamination

Cabinet Surfaces. With the cabinet blower running, all containers and equipment should be surface decontaminated and removed from the cabinet when work is completed. At the end of the workday, the final surface decontamination of the cabinet should include a wipe-down of the work surface, the cabinet's sides and back, and the interior of the glass. If necessary, the cabinet should also be monitored for radioactivity and decontaminated when necessary. Investigators should remove their gloves and gowns in a manner to prevent contamination of unprotected skin and aerosol generation, and wash their hands as the final step in safe microbiological practices. The cabinet blower may be turned off after these operations are completed, or it may be left on.

Small Spills. Small spills within the operating BSC can be handled immediately by removing the contaminated absorbent paper towel and placing it into the biohazard bag or receptacle. Any splatter onto items within the cabinet, as well as the cabinet interior, should be immediately cleaned up with a towel dampened with an appropriate decontaminating solution. Gloves should be changed after the work surface is decontaminated and before placing clean absorbent towel in the cabinet. Hands should be washed whenever gloves are changed or removed.

Large Spills. Spills large enough to result in liquids flowing through the front or rear grilles require more extensive decontamination. All items within the cabinet should be surface decontaminated and removed. After ensuring that the drain valve is closed, decontaminating solution can be poured onto the work surface and through the grille(s) into the drain pan.

Decontamination Time and Cleanup. Twenty to 30 minutes is generally considered an appropriate contact time for decontamination, but this varies with the disinfectant and the microbiological agent. Manufacturer's directions should be followed. The spilled fluid and disinfectant solution on the work surface should be absorbed with paper towels and discarded into a biohazard bag. The drain pan should be emptied into a collection vessel containing disinfectant. A hose barb and flexible tube should be attached to the drain valve and be of sufficient length to allow the open end to be submerged in the disinfectant within the collection vessel. This procedure serves to minimize aerosol generation. The drain pan should be flushed with water and the drain tube removed.

Radioactive Materials. Should the spilled liquid contain radioactive material, a similar procedure can be followed. Radiation safety personnel should be contacted for specific instructions.

Work Surface, Grille, and Drain Pan Cleaning. Periodic removal of the cabinet work surface and/or grilles after the completion of drain pan decontamination may be justified because of dirty drain pan surfaces and grilles, which ultimately could occlude the drain valve or block airflow. However, extreme caution should be observed while wiping these surfaces to avoid injury from broken glass and sharp metal edges. Always use disposable paper towels and avoid applying harsh force. Wipe dirty surfaces gently. Never leave paper towels on the drain pan because the paper could block the drain valve or the air passages in the cabinet.

E.4.2 Internal Cabinet Gaseous Decontamination

BSCs that have been used for work involving infectious materials must be decontaminated before HEPA filters are changed or internal repair work is done. Before a BSC is relocated, a risk assessment considering the agents manipulated within the BSC must be performed to determine the need and method for decontamination. LBNL policy requires that BSCs and their filters be decontaminated with a gaseous decontaminant prior to being moved or internal repair work is conducted, unless approved by the Biosafety Officer. The most common decontamination method uses formaldehyde gas, although more recently, hydrogen peroxide vapor and chlorine dioxide gas have been used successfully.

E.5 Biosafety Cabinet Installation and Engineering

Room Ventilation and Secondary Barriers. Whereas BSCs are considered to be the primary safety barrier for manipulation of infectious materials, the laboratory room itself is considered to be the secondary safety barrier. Inward directional airflow is established by exhausting a greater volume of air than is supplied to a given laboratory and by drawing makeup air from the adjacent space. This directional air flow into the room should generally be accomplished at BL2 (see Section 5.6.4.1 of this manual). The air balance for the entire facility should be established and maintained to ensure that air flows from areas of least to greatest potential contamination.

The room exhaust system should be sized to handle both the room and all containment devices vented through the system. Adequate supply air must be provided to ensure appropriate function of the exhaust system. The facility engineer must be consulted before locating a new cabinet requiring connection to the building exhaust system. Right angle bends, long horizontal runs, and transitional connections within the systems will add to the demand on the exhaust fan. The building exhaust air should be discharged away from supply air intakes to prevent reentrainment of laboratory exhaust air into the building air supply system. Refer to recognized design guides for locating the exhaust terminus relative to nearby air intakes.

Utility Services. Utility services needed within a BSC must be planned carefully. Protection of vacuum systems must be addressed (Figure 9). Electrical outlets inside the cabinet must be protected by ground fault circuit interrupters and should be supplied by an independent circuit. When propane or natural gas is provided, a clearly marked emergency gas shutoff valve must be installed outside the cabinet for fire safety. All nonelectrical utility services should have exposed, accessible shutoff valves. The use of compressed air within a BSC must be carefully considered and controlled to prevent aerosol production and reduce the potential for vessel pressurization.

Ultraviolet (UV) Lamps. UV lamps are not required in BSCs nor are they necessary. If installed, UV lamps must be cleaned weekly to remove any dust and dirt that may block the germicidal effectiveness of the ultraviolet light. The lamps should be checked weekly with a UV meter to ensure that the appropriate intensity of UV light is being emitted. UV lamps must be turned off when the room is occupied to protect eyes and skin from UV exposure, which can burn the cornea and cause skin cancer. If the cabinet has a sliding sash, close the sash when operating the UV lamp.

BSC Placement. BSCs were developed as workstations to provide personnel, environmental, and product protection during the manipulation of infectious microorganisms. Certain considerations must be met to ensure maximum effectiveness of these primary barriers.

Whenever possible, adequate clearance should be provided behind and on each side of the cabinet to allow easy access for maintenance and to ensure that the cabinet air recirculated to the laboratory is not hindered. A 12- to 14-inch clearance above the cabinet may be required to provide for accurate air velocity measurement across the exhaust filter surface and for exhaust filter changes. When the BSC is hard ducted or connected by a canopy unit to the ventilation system, adequate space must be provided so that the configuration of the duct work will not interfere with airflow. The canopy unit must provide adequate access to the exhaust HEPA filter for testing.

The ideal location for the biological safety cabinet is away from the entry (i.e., the rear of the laboratory away from traffic), since people walking parallel to the face of a BSC can disrupt the air curtain. The air curtain created at the front of the cabinet is quite fragile, amounting to a nominal inward and downward velocity of 1 mph. Open windows, air supply registers, portable fans, or laboratory equipment that creates air movement (e.g., centrifuges, vacuum pumps) should not be located near the BSC. Similarly, chemical fume hoods must not be located close to BSCs.

E.6 Biosafety Cabinet Testing and Certification

Class II BSCs are the primary containment devices that protect the worker, product, and environment from exposure to microbiological agents. BSCs used for BL1, BL2, or other safety levels must be tested and certified before initial use, after being moved, and on a nominal one-year cycle. This testing must verify that BSC operation is in accordance with the National Sanitation Foundation (NSF)/ American National Standard (ANSI) 49 Standard (Class II Laminar Flow Biohazard Cabinetry) and be performed by experienced and qualified personnel. This testing ensures the balance of inflow and exhaust air, distribution of air onto the work surface, integrity of the cabinet and the filters, and other BSC features. The LBNL Environment, Health, and Safety (EH&S) Industrial Hygiene Group manages surveys and tests of BSCs through the LBNL ventilation safety program and qualified vendors contracted to test BSCs (see Section 5.6.4.2 of this manual).

Appendix F

Decontamination and Antimicrobials

F.1 Introduction and Scope

This appendix primarily provides information and guidance on decontamination principles, decontamination terms, and the variety of chemical and physical agents used to decontaminate. In a few cases, requirements are stated using the words *should* or *must*. See Section 5.7 of this manual for requirements and additional information regarding decontamination, waste, and decommissioning. Information used to develop this appendix was taken from a wide variety of Web pages and documents. Primary sources are listed in the reference section at the end of this appendix.

F.2 Decontamination Principles and Terms

Decontamination is a process that uses an antimicrobial to reduce or inactivate biological contaminants or components to an acceptable level so as to reduce or eliminate the possibility of transmitting pathogens to undesired hosts. An **antimicrobial** is the chemical or physical agent that is used in a decontamination process to prevent microbial growth. Prevention of microbial growth and pathogen transmission is needed to control contamination of the work and prevent disease in hosts such as laboratory workers, the general public, and other organisms in the environment. The decontamination process, level, antimicrobial, frequency, and specific method are based on the work activity, agents that need inactivation, and decontamination objective or requirements.

Sterilization, disinfection, sanitization, and antisepsis are decontamination processes that result in different levels of decontamination or decontamination of different types of objects. These processes are discussed in Section F.2.1 below. A variety of terms are also used to describe the antimicrobials that are used in sterilization, disinfection, sanitization, and antisepsis. These antimicrobial terms are discussed in Section F.2.2 below.

F.2.1 Decontamination Processes and Levels

F.2.1.1 Sterilization

Sterilization is the process of completely destroying all living microorganisms and viruses on an object. Any item, device, or solution is considered to be **sterile** when it is completely free of all living microorganisms and viruses. Sterility is an absolute term (an item is either sterile or it is not), but sterilization procedures must be defined to achieve sterility. A **sterilization procedure** is a treatment process to which an item is subjected after which the probability of a microorganism or virus (including a high number of bacterial endospores) surviving on the item is less than 1 in 1 million. This level of killing efficacy is referred to as the **sterility assurance level**.

Sterilization can be accomplished by heat (e.g., autoclave or incineration), ethylene oxide gas, hydrogen peroxide gas, plasma, ozone, and radiation. Solid biohazardous waste is typically sterilized prior to disposal.

F.2.1.2 Disinfection

Disinfection is generally a less lethal process than sterilization. **Disinfection** is the process of generally eliminating nearly all recognized pathogenic microorganisms but not necessarily all microbial forms (e.g., bacterial spores) on inanimate objects (e.g., work surfaces, equipment). Disinfection does not ensure “overkill" and therefore lacks the margin of safety achieved by sterilization procedures. Longer disinfection times or higher concentrations of disinfectant may be needed if the effectiveness of a disinfection procedure is reduced significantly by a number of factors such as:

1. More resistant microorganisms (especially bacterial spores)
2. Higher microbial concentrations
3. Presence of more organic matter (e.g., soil, feces, or blood)
4. Rougher surfaces or more porous equipment or material
5. Lower temperatures

Disinfection may involve chemical or physical agents, but the term disinfection more commonly implies the use of chemical germicides or disinfectants on inanimate objects. See Section F.2.2 below for additional explanation of germicides and disinfectants.

Disinfection is a process that reduces the level of microbial contamination, but there is a broad range of activity that extends from sterility at one extreme to a minimal reduction in the number of microbial contaminants at the other. By definition, chemical disinfection and in particular, high-level disinfection differs from chemical sterilization by its lack of sporicidal power. This is an oversimplification of the actual situation because a few chemical germicides used as disinfectants do, in fact, kill large numbers of spores even though high concentrations and several hours of exposure may be required. Nonsporicidal disinfectants may differ in their capacity to accomplish disinfection or decontamination. Some germicides rapidly kill only the ordinary vegetative forms of bacteria such as staphylococci and streptococci, some forms of fungi, and lipid-containing viruses, whereas others are effective against such relatively resistant organisms as *Mycobacterium tuberculosis* var. *bovis*, nonlipid viruses, and most forms of fungi.

Levels of chemical disinfection and activity levels for chemical disinfectants (or germicides) on inanimate surfaces may be used to assist in categorizing and selecting disinfection methods and disinfectants. Levels of chemical disinfection are categorized in Table F-1, and activity levels of selected disinfectants are shown in Table F-2.

Table F-1
Levels of Chemical Disinfection

Level	Level Definition and Description
High	High-level disinfection kills vegetative microorganisms and inactivates viruses, but not necessarily high numbers of bacterial spores. Such disinfectants are capable of sterilization when the contact time is relatively long (e.g., 6 to 10 hours). As high-level disinfectants, they are used for relatively short periods of time (e.g., 10 to 30 minutes). These chemical germicides are potent sporicides and, in the United States, are classified by the Food and Drug Administration (FDA) as sterilant/disinfectants. They are formulated for use on medical devices, but not on environmental surfaces such as laboratory benches or floors.
Intermediate	Intermediate-level disinfection kills vegetative microorganisms, including *Mycobacterium tuberculosis*, all fungi, and inactivates most viruses. Chemical germicides used in this procedure often correspond to Environmental Protection Agency (EPA)-approved "hospital disinfectants" that are also "tuberculocidal." They are used commonly in laboratories for disinfection of laboratory benches and as part of detergent germicides used for housekeeping purposes.
Low	Low-level disinfection kills most vegetative bacteria except *M. tuberculosis*, some fungi, and inactivates some viruses. The EPA approves chemical germicides used in this procedure in the U.S. as "hospital disinfectants" or "sanitizers."

Source: adapted from Biosafety in Microbiological and Biomedical Laboratories (BMBL), fifth edition, Appendix B.

Table F-2
Activity Levels of Selected Liquid Germicides [a]

Procedure/Product	Aqueous Concentration	Disinfection Activity Level
Sterilization		
glutaraldehyde	variable	N/A
hydrogen peroxide	6–30%	N/A
formaldehyde	6–8% [b]	N/A
chlorine dioxide	variable	N/A
peracetic acid	variable	N/A
Disinfection		
glutaraldehyde	variable	high to intermediate
ortho-phthalaldehyde	0.5%	high
hydrogen peroxide	3 to 6%	high to intermediate
formaldehyde	1 to 8%	high to low
chlorine dioxide	variable	high
peracetic acid	variable	high
chlorine compounds [c]	500 to 5,000 mg/L available chlorine (or 1 to 10% household beach in water)	intermediate
alcohols(ethyl,isopropyl) [d]	70%	intermediate
phenolic compounds	0.5 to 3%	intermediate to low
iodophor compounds [e]	30 to 50 mg/L free iodine up to 10,000 mg/L available iodine 0.1 to 0.2%	intermediate to low
quaternary ammonium compounds		low

Source: adapted from BMBL, fifth edition, Appendix B.

Footnotes:

a This list of chemical germicides centers on generic formulations. A large number of commercial products based on these generic components can be considered for use. Users should ensure that commercial formulations are registered with the EPA or by the FDA.

b Because of the ongoing controversy of the role of formaldehyde as a potential occupational carcinogen, the use of formaldehyde is limited to certain specific circumstances under carefully controlled conditions, e.g., for the disinfection of certain hemodialysis equipment. There are no FDA-cleared liquid chemical sterilant/disinfectants that contain formaldehyde.

c Generic disinfectants containing chlorine are available in liquid or solid form (e.g., sodium or calcium hypochlorite). Although the indicated concentrations are rapid acting and broad spectrum (tuberculocidal, bactericidal, fungicidal, and virucidal), no proprietary hypochlorite formulations are formally registered with EPA or cleared by FDA. Common household bleach is an excellent and inexpensive source of sodium hypochlorite. Concentrations between 500 and 1,000 mg/L (or ppm) chlorine are appropriate for the vast majority of uses requiring an intermediate level of germicidal activity. Higher concentrations are extremely corrosive as well as irritating to personnel, and their use should be limited to situations where there is an excessive amount of organic material or unusually high concentrations of microorganisms (e.g., spills of cultured material in the laboratory).

d The effectiveness of alcohols as intermediate-level germicides is limited because they evaporate rapidly, resulting in short contact times, and also lack the ability to penetrate residual organic material. They are rapidly tuberculocidal, bactericidal, and fungicidal, but may vary in spectrum of virucidal activity (see text). Items to be disinfected with alcohols should be carefully precleaned and then completely submerged for an appropriate exposure time (e.g., 10 minutes).

e Only those iodophors registered with EPA as hard-surface disinfectants should be used, closely following the manufacturer's instructions regarding proper dilution and product stability. Antiseptic iodophors are not suitable for disinfecting devices, environmental surfaces, or medical instruments.

An understanding of the resistance of organisms to chemical germicides should also be considered when selecting the disinfection methods and disinfectants. Table F-3 shows the resistance of selected organisms to decontamination, from most to least resistant.

Table F-3
Descending Order of Organism Resistance to Germicidal Chemicals

BACTERIAL SPORES *Bacillus subtilis, Clostridium sporogenes* ⇓
MYCOBACTERIA *Mycobacterium tuberculosis* var. *bovis*, nontuberculous mycobacteria ⇓
NONLIPID OR SMALL VIRUSES Poliovirus, Coxsackievirus, Rhinovirus ⇓
FUNGI *Trichophyton* spp., *Cryptococcus* spp., *Candida* spp. ⇓
VEGETATIVE BACTERIA *Pseudomonas aeruginosa*, *Staphylococcus aureus*, *Salmonella choleraesuis*, Enterococci ⇓
LIPID OR MEDIUM-SIZE VIRUSES Herpes simplex virus, cytomegalovirus, respiratory syncytial virus, hepatitis B virus (HBV), hepatitis C virus (HCV), human immunodeficiency virus (HIV), Hantavirus, Ebola virus

Source: adapted from BMBL, fifth edition, Appendix B

Note: There are exceptions to this list. *Pseudomonas* spp. are sensitive to high-level disinfectants, but if they grow in water and form biofilms on surfaces, the protected cells can approach the resistance of bacterial spores to the same disinfectant. The same is true for resistance to glutaraldehyde by some nontuberculous mycobacteria, some fungal ascospores of *Microascus cinereus* and *Cheatomium globosum,* and the pink-pigmented *Methylobacteria*. Prions are also resistant to most liquid chemical germicides and are discussed in the last part of this section.

F.2.1.3 Sanitization

Sanitization is the process of generally reducing microorganisms by the use of general cleaning agents. Sanitization is less effective than disinfection at reducing the number of microorganisms. General cleaning of laundry or laboratory, restroom, room, and equipment surfaces with soap and water or another cleaning agent are examples of sanitization. A particular cleaning method might use a chemical germicide or disinfectant, but the cleaning process is considered sanitization if the process only generally reduces the number of microorganisms. See Section F.2.2 below for additional explanation of germicides and disinfectants.

In the food industry, the term sanitization has a more specific meaning. According to the California Retail Food Code (CRFC), sanitization means the application of cumulative heat or chemicals on cleaned food-contact surfaces that, when evaluated for efficacy, is sufficient to yield a reduction of five logs, which is equal to a 99.999% reduction, of representative disease microorganisms of public health importance.

F.2.1.4 Antisepsis

Antisepsis is the application of a liquid antimicrobial chemical to human or animal living tissue. The purpose of antisepsis is to prevent sepsis by destroying potentially infectious organisms or by inhibiting their growth and multiplication. **Sepsis** is the presence of infectious organisms in the blood or other tissue of the body. No sporicidal activity is implied. Examples of antisepsis include application of a germicide to the injection site on a research animal, and handwashing with germicidal solution. With handwashing, the objective includes preventing the spread of infectious or contaminating agents for safety and quality control.

F.2.2 Antimicrobial Categories

Chemical or physical agents or substances that can decontaminate under ideal conditions have specific terms with specific meanings. The broadest term for such agents is the term antimicrobial. **Antimicrobial** is a chemical or physical agent that can prevent microbial growth either by some static action or by the direct killing of microbes. Categories of antimicrobials include:

- **Sterilant.** An antimicrobial chemical or physical agent that is capable of killing all microbes including their spores to the sterility assurance level.
- **Germicide.** An antimicrobial substance or physical agent that kills microbes. Germicides are a broader category of antimicrobials than disinfectants, since some germicides are active against endospores and viruses. Germicides, which are also known for the specific microorganisms they kill, end with the suffix *–cidal* (e.g., bacterio*cide*, spor*icide*, fung*icide*, viru*cide*).
- **Disinfectant.** A chemical germicide or physical agent that is applied to inanimate objects to kill microbes, but is not capable of killing endospores, some viruses, or mycobacterium. Disinfectants are typically chemical germicides.
- **Antiseptic.** A disinfecting chemical agent applied to living tissue and used to prevent sepsis. Antiseptics are a subset of disinfecting chemical agents. A few agents are suitable as both disinfectants and antiseptics, although most disinfectants are too harsh for use on delicate skin.

F.2.3 Antimicrobial Selection and Registered Disinfectants

When using a chemical or physical antimicrobial to ensure decontamination is accomplished for biosafety purposes (i.e., protection of workers, public, agriculture, or environment):

- There should be information indicating that the selected antimicrobial will be effective when used in a certain manner for the biological materials or agents and equipment or surfaces that need to be decontaminated; and
- The antimicrobial should be used in accordance with its antimicrobial activity capabilities and conditions of use.

Antimicrobial information in this appendix, information provided by manufacturers (e.g., labels or technical specifications), and other information may be used for selecting and using the appropriate antimicrobial. Selecting a commercially available chemical antimicrobial product registered with the EPA or cleared by the FDA and using the product within its manufacturer-specified limits also ensure effective decontamination. The following lists of antimicrobials registered with EPA and FDA are available online:

- Selected EPA-registered Disinfectants including sterilizers, tuberculocides, and antimicrobial products against certain human public health bacteria and viruses
- FDA-Cleared Sterilants and High-Level Disinfectants with General Claims for Processing Reusable Medical and Dental Devices

The Occupational Safety and Health Administration (OSHA) Bloodborne Pathogens (BBPs) Standard requires that work surfaces that are contaminated with BBP material (as defined in Section 3.3.4 of this manual) must be cleaned with an “appropriate disinfectant.” Appropriate disinfectants include:

- Household bleach (i.e., approximately 5.25% sodium hypochlorite) diluted to concentrations ranging from 1% (1:100) to 10% (1:10) in water.
- EPA-registered products as sterilants (List A)
- EPA-registered products as tuberculocides (List B)
- EPA-registered products effective against HIV/HBV (List D), or
- FDA-cleared sterilants and high-level disinfectants

Any of the above products are considered effective when used according to the manufacturer's instructions, provided the surfaces have not become contaminated with agents, or volumes or concentrations of agents for which higher level disinfection is recommended. Also note that the EPA lists contain the primary registrants' products only. The same formulation is frequently repackaged and renamed and distributed by other companies. These renamed products will not appear on the list, but their EPA Registration Number must appear on the label. Products cleared solely by the FDA will not have an EPA Number.

F.3 Chemical Antimicrobials

This section summarizes basic types and characteristics of antimicrobials that are chemical agents. Section F.4 below summarizes antimicrobials that are physical agents.

All chemical antimicrobials harm microorganisms in some manner, but different chemical antimicrobials have different mechanisms of action. Mechanisms of harm include protein denaturation, membrane disruption, nucleic acid damage, and inhibition of metabolism. Chemical antimicrobials that are summarized in this section include surfactants, halogen-containing compounds, alcohols, phenol and phenol derivatives, oxidizing agents, and alkylating agents.

F.3.1 Surfactants (Soaps and Detergents)

A **surfactant** is a ***surf***ace ***act***ive ***a***gen***t*** that is usually an organic compound that possesses both hydrophilic (water-loving) and lipophilic (fat-liking) properties that make the compound soluble in water and lipids. Surfactants therefore increase the solubility of lipids in water solutions and increase the ability of water solutions to wet (i.e., move across or penetrate) lipid surfaces. Soaps and detergents are examples of surfactants.

F.3.1.1 Soaps

Soap is sodium or potassium salts of fatty acids. Soaps are therefore alkaline (pH greater than 7). Soaps either harm bacteria that are sensitive to high pH, or remove pathogens from surfaces by cleaning the surface.

F.3.1.2 Detergents and Quaternary Ammonium Compounds

Detergent is a synthetic surfactant. A detergent may be cationic (positively charged) or anionic (negatively charged). Cationic detergents are better at inactivating bacteria than anionic detergents.

One commonly used type of cationic detergent disinfectant is a quaternary ammonium compound. **Quaternary ammonium compound** or **quat** is a cationic detergent compound derived from ammonia by replacing the hydrogen atoms with organic radicals, and the compound is especially important as surface-active agents or disinfectants, or in drugs. Quats have strong surface activity and can be used for general cleaning and low-level disinfection. Additional properties of quaternary ammonium compounds include the following:

- Active against Gram-positive bacteria and lipid-containing viruses. They are less active against Gram-negative bacteria and are not active against nonlipid-containing viruses and bacterial spores.
- Less effective or inactivated by organic materials, soaps or anionic detergents, or salts of metals found in water. Quats are often mixed with another agent to overcome some of these problems.
- Built-in cleaning properties and relatively nontoxic (e.g., can be used for general cleaning and food equipment).
- Has no odor but acts as a deodorizer.
- Effective at temperatures up to 212°F.
- More effective in alkaline than in acid solutions.
- Typically nonirritating to the skin when used in proper dilution, but prolonged skin or eye contact should be avoided.
- Stable in storage.

F.3.2 Halogens (Chlorine and Iodine)

Halogens are a group of elements on the periodic table. Chlorine and iodine are two halogens that are routinely used as antimicrobials.

F.3.2.1 Chlorine and Sodium Hypochlorite

Chlorine-containing solutions are commonly used disinfectants, and sodium hypochlorite in the form of household bleach is the most common solution used for chlorine disinfection. These solutions have broad-spectrum antimicrobial activity, but their decay rates and corrosive nature limit their use. The following bullets provide additional information:

- <u>Concentrations and Effectiveness</u>: Chlorine-containing solutions have broad spectrum activity, but the concentration of the chlorine-active ingredient in the solution at time of use affects germicidal activity. Low concentrations of available chlorine (2 to 500 ppm) are active against vegetative bacteria, fungi, and most viruses. Effectiveness increases

with concentration of available chlorine. Rapid sporicidal action can be obtained at about 2,500 ppm.

- Active Ingredient Decay: The chlorine-active ingredient typically decays or is consumed. Decay or decomposition typically occurs over time and is accelerated by unfavorable storage conditions. Chlorine is also consumed by excess organic materials. Use of sufficient concentrations and quantity of chlorine, along with precleaning items to be disinfected, ensures sufficient chlorine is available for disinfection.
- Corrosiveness: Chlorine-containing solutions are strong oxidizers and are very corrosive to personnel and some surfaces. Personnel handling these solutions must wear required hand, eye, and body protection (see Section 5.4 of this manual). Surfaces such as stainless steel may be corroded and should be wiped or rinsed with water following disinfection.

One of the most common and effective disinfectants used in the laboratory is sodium hypochlorite (NaOCl) in water or "bleach." **Household bleach** is a water-based solution of sodium hypochlorite with a typical concentration of 5.25% by weight (or 52,500 ppm) of the active sodium hypochlorite ingredient. Commercial supplies are also available in the 12 to 15% dilution range, but household bleach is typically sufficient for laboratory use. Many brands and formulations of bleach are registered with the EPA as a disinfectant that is effective against bloodborne and other common human pathogens (see Section F.2.3 above). Clorox® is the best-known brand of bleach in the U.S.

Common applications and mixtures of household bleach are listed below.

- Work Surfaces and Equipment: Hard work surfaces and equipment may be disinfected with 1% solution of fresh household bleach (or 500 ppm sodium hypochlorite). A 1% household bleach solution can be made by mixing 1 part household bleach with 99 parts water, or 1/8 to 1/4 cup household bleach with water in a gallon container, or 10 ml of household bleach with water in a 1 L container. Contact time for bleach is generally considered to be the time it takes the product to air dry.
- Spills and Liquid Waste: Biohazardous spills and liquid waste may be decontaminated by adding household bleach to water or the liquid to be decontaminated until a 10% concentration of household bleach is achieved (or 5,000 ppm sodium hypochlorite). A 10% household bleach solution can be made by mixing one part household bleach with 9 parts water, or 1.5 cups household bleach with water in a gallon container, or 100 ml of household bleach with water in a 1 L container. The bleach should remain in contact with the spill or waste material for approximately 20 minutes to ensure adequate germicidal action. See Appendix G of this manual for additional information on spill cleanup.

Sodium hypochlorite solutions are not very stable, and the antimicrobial activity of the chlorine typically decays over time. This decay is accelerated by unfavorable storage conditions and must be compensated by mixing fresh solutions. Favorable storage conditions include: temperature below 70°F, plastic container (not metal or glass), opaque container (to minimize exposure to light), and closed container (to minimize exposure to air). It is common to measure 50% decay within one month under favorable storage conditions. Since bleach antimicrobial activity decays over time, bleach solutions must be sufficiently fresh so that the solution to be used for decontamination has sufficient antimicrobial activity. Fresh solutions of diluted household bleach made up daily are recommended for disinfection of work surfaces.

F.3.2.2 Iodine and Iodophors

Iodine is another halogen that is routinely used as an antimicrobial (at 70 to 150 ppm total iodine), and iodine has properties similar to chlorine. **Iodophor** is a preparation containing iodine complexed with a solubilizing agent, such as a surfactant or povidone (a type of water soluble polyvinyl polymer). The resulting iodophor is a water-soluble material that increases penetration (as a surfactant) and slows the release of free iodine over long periods (as a disinfectant) when in solution. Iodophors are prepared by mixing iodine with the solubilizing agent. Wescodyne® is a common laboratory disinfectant iodophor.

Additional properties of iodophors include:

- Rapid germicidal action. Effective against vegetative bacteria, Gram-positive bacteria, Gram-negative bacteria, fungi, viruses, and tubercle bacilli. Poor activity against bacterial spores.
- Most effective in acid solutions.
- Should not be used in hot water, since iodine is vaporized at 120 to 125°F. For optimal germicidal activity, dilute with warm acidic water. Resulting solutions are less stable but have a higher germicidal activity.
- Effectiveness reduced by organic matter (but not as much as hypochlorites).
- Stable in storage if kept cool and tightly covered.
- Relatively harmless and nontoxic to humans.
- The solution has germicidal activity if the color is brown or yellow.
- Solutions of sodium thiosulfate can be used to inactivate iodophors and remove iodophor stains.

Iodophors may also be used as antiseptics. Betadine and isodine are examples of antiseptic iodophors. Iodine may also be used in an alcohol solution (i.e., or tincture) as an antiseptic.

F.3.3 Alcohols

Ethyl or isopropyl (rubbing) alcohol concentrations of 70 to 90% in water are good general-use disinfectants with some limitations. Alcohol-water mixtures are more penetrating than pure alcohols, and therefore provide better disinfection. Alcohol concentrations above 90% are less effective than 70 to 90% concentrations.

Alcohols have some positive and negative characteristics, including:

- Alcohols are effective against a broad spectrum of bacterial species and many viruses, but they are less active against nonlipid viruses and ineffective against bacterial spores.
- Alcohols evaporate quickly and leave no residue. These characteristics often make alcohols convenient and efficient, but provide limited penetration and disinfection time.

F.3.4 Phenol and Phenol Derivatives (Phenolics)

Phenol and phenol derivatives (or phenolics) come in various concentrations ranging mostly from 5 to 10% phenol-based compounds. These disinfectants are especially useful for disinfecting materials contaminated with organic materials and contaminated surfaces. Lysol® is an example of a phenol-based disinfectant.

Additional properties of phenol and phenol derivatives include the following:

- Effective at killing Gram-negative and Gram-positive bacteria including *Mycobacterium tuberculosis*, fungi, and lipid-containing viruses. Not active against spores or most nonlipid viruses.
- Low solubility in water unless combined with detergent.
- Stable in storage.
- Less adversely affected by organic matter than other common disinfectants.
- Effective over a relatively large pH range.
- Prolonged contact deteriorates rubber.
- Can cause skin and eye irritation.
- Not for use on food contact surfaces.
- Some phenolics are mild enough for use as antiseptics whereas others are too harsh or otherwise dangerous to be employed on living tissue.

F.3.5 Oxidizing Agents (Hydrogen Peroxide)

Hydrogen peroxide is an oxidizing agent and may be used as a liquid or vapor antimicrobial. Hydrogen peroxide vapor may be used for decontamination of equipment such as biosafety cabinets or high-containment (Biosafety Level 3) rooms that may be sealed during the decontamination process.

F.3.6 Alkylating Agents (Formaldehyde, Glutaraldehyde, Ethylene Oxide)

Formaldehyde, glutaraldehyde, and ethylene oxides are alkylating agents. These agents add carbon-containing functional groups to biological molecules.

F.3.6.1 Formaldehyde

Formaldehyde may be used as a liquid or gaseous antimicrobial. When used as a liquid, formaldehyde may be mixed with water as formalin or mixed with alcohol. Formaldehyde is also a human carcinogen, creates respiratory problems, and has a very low occupational exposure ceiling and short-term exposure limits that are approximately equal to the odor threshold.
Additional information on formaldehyde antimicrobials are listed below:

- Formalin is 37% solution of formaldehyde in water. Dilution of formalin to 5% results in an effective disinfectant. A concentration of 8% formaldehyde exhibits good activity against vegetative bacteria, spores, and viruses.
- Formaldehyde and alcohol solutions (8% formaldehyde in 70% alcohol) are considered very good disinfectants because of their effectiveness against vegetative bacteria, fungi, spores, and viruses. This is the disinfectant of choice for many applications.
- Formaldehyde gas may be generated by heat-accelerated depolymerization of flake paraformaldehyde. The resulting gas may be used to decontaminate equipment such as biosafety cabinets that may be sealed prior to decontamination.

F.3.6.2 Glutaraldehyde

Gluteraldehyde may be used for cold sterilization of equipment (e.g., medical) that cannot be steam sterilized, but sterilization often requires many hours of exposure. Two percent solutions exhibit good activity against vegetative bacteria, spores, and viruses. Its use, however, must be limited and controlled due to its toxic properties and ability to damage the eyes.

Glutaraldehyde is slightly acidic in aqueous solution and typically used at ambient temperature. When these solutions are adjusted by sodium bicarbonate (or other buffers) to a pH of 7.5 to 8.5, glutaraldehyde is considered to be activated and the antimicrobial activity enhanced. Activated glutaraldehyde has limited stability after activation.

F.3.6.3 Ethylene Oxide

Ethylene oxide is a gaseous chemical antimicrobial used to sterilize laboratory, medical, and pharmaceutical products and equipment that would be damaged by high-temperature steam sterilization (e.g., prepackaged plastic petri dishes). This gas is especially useful because it penetrates very well into small crevices.

F.4 Physical Antimicrobials

This section summarizes basic types and characteristics of antimicrobials that are physical agents. Physical antimicrobials summarized in this section include dry heat, wet heat, ultraviolet radiation, ionizing radiation, visible light, and filtration.

F.4.1 Heat

Dry heat (e.g., oven) and moist heat (e.g., autoclave) may be used to sterilize materials and equipment. The following principles and comparisons generally apply to sterilization with dry and moist heat:

- Moist heat is more effective than dry heat at a given temperature or length of exposure.
- Moist heat is more penetrating than dry heat.
- Temperature and length of exposure are inversely related, and penetration is critical.
- Temperature and length of exposure needed to achieve sterilization are inversely related (i.e., lower temperatures require longer exposure times).
- Time to achieve sterilization does not start until heat has penetrated into the item and the required temperature in the item has been achieved.

F.4.1.1 Dry Heat (Baking and Incineration)

Dry heat sterilization may include baking or incineration.

- Baking in an oven to achieve sterilization typically requires 171°C for at least 1 hour, 160°C for at least 2 hours, or 121°C for at least 16 hours.
- Incineration may also be used to achieve dry heat sterilization. Examples include off-site incineration of biohazardous or pathological waste by an LBNL subcontractor or heating an inoculating loop in an infrared heat chamber at 815°C (1,500°F).

Specific times and temperatures must be determined for each type of material being sterilized. Generous safety factors are usually added to allow for variables that can influence the efficiency of dry heat sterilization, such as:

- The moisture of the sterilization environment as well as the moisture history of organisms prior to heat exposure.
- The heat transfer properties and the spatial configuration or arrangement of articles in the load.

F.4.1.2 Wet Heat (Boiling and Autoclaving)

Use of wet heat may include boiling an item in water or processing the item in an autoclave. Boiling water is a common means of applying moist heat, but boiling does not kill endospores and all viruses. Boiling water is 100°C (212°F) at standard atmospheric pressure. Higher wet-heat temperatures and sterilization efficacy may be achieved with a pressurized autoclave.

Autoclaves are commonly used to sterilize laboratory equipment or materials such as glassware, media, reagents, or waste. See Section F.5 below for general information and guidelines on autoclave principles, operation, and maintenance.

F.4.2 Ultraviolet (UV) Radiation

UV radiation or **UV light** is electromagnetic radiation with a wavelength shorter than that of visible light but longer than X-rays. They are in the range of 10 nanometers (nm) to 400 nm, and energies from 3 electron volts (eV) to 124 eV. UV radiation is so named because the spectrum consists of electromagnetic waves with frequencies higher than those that humans identify as the color violet.

F.4.2.1 UV Light Health Effects and Categories

UV radiation may affect or damage the skin and eyes depending on the wavelength, intensity, and duration of exposure. Other organs are typically not affected because UV light does not penetrate deeply into tissue. Acute effects to the skin and eyes are generally not permanent but can be quite painful.

The UV spectrum is divided into three wavelength bands primarily based on their biological effects:

- **UVA** (315 to 400 nm) is long-wave UV or “back light” and is used in dentistry and tanning. UVA rays can penetrate the middle layer of skin (dermis) and cause darkening and toughening of the skin. Overexposure to UVA has also been associated with suppression of the immune system and cataract formation.
- **UVB** (280 to 315 nm) is medium-wave UV and is used for fade testing and photocuring of plastics. UVB rays reach the outer layer of skin (epidermis) and cause skin burns, erythma (reddening of the skin), and darkening of the skin. Prolonged exposures increase the risk of skin cancer.
- **UVC** (100 to 280 nm) is short-wave UV and is used as a germicidal (e.g., inside biosafety cabinets). UVC poses the most risk to skin. Although UVC from the sun is absorbed by the atmosphere, manmade sources of UVC need to restrict their intensity and control exposure.

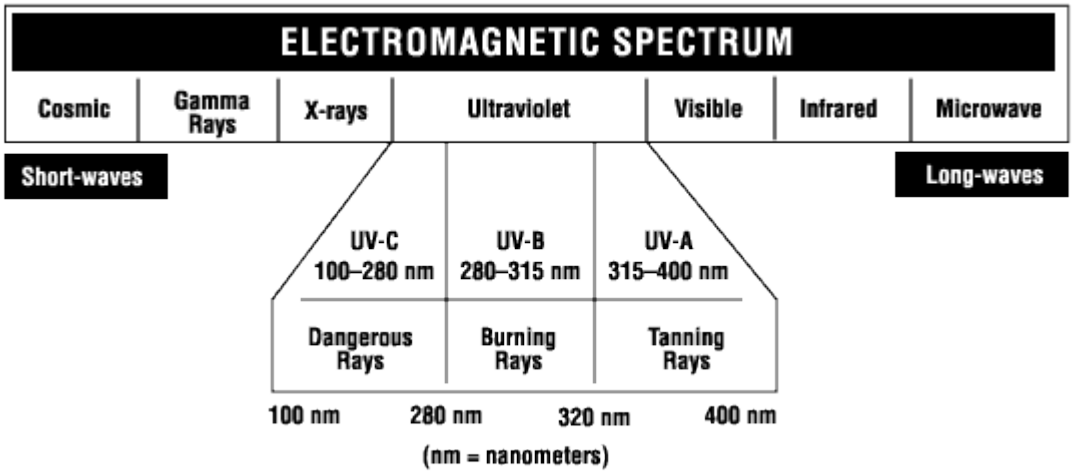

Electromagnetic spectrum. Source: CCOHS, OSH Answers, Physical Agents, Ultraviolet Radiation (February 2010).

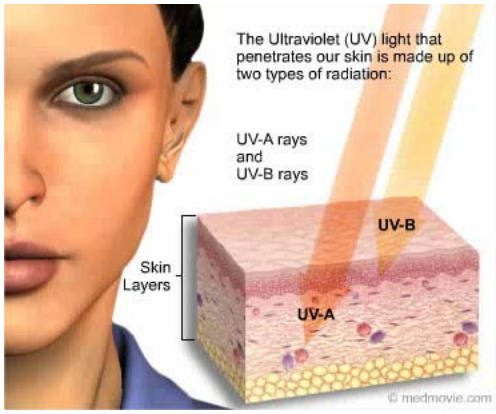

UV light that penetrates skin. Source: FDA, Radiation-emitting Products, Ultraviolet Radiation (February 2010).

The eyes are particularly sensitive to UV radiation. Even a short exposure of a few seconds can result in painful but temporary inflammatory conditions known as photokeratitis and conjunctivitis. Examples of eye disorders resulting from UV exposure include "flash burn," "ground-glass eye ball," "welder's flash," and "snow blindness." The symptoms are pain, discomfort similar to the feeling of sand in the eye, and an aversion to bright light.

The eyes are most sensitive to UV radiation from 210 nm to 320 nm (UVC and UVB). Maximum absorption by the cornea occurs around 280 nm. UVA absorption by the lens may be a factor in producing a cataract (a clouding of the lens in the eye).

All wavelengths less than 320 nm (UVB and UVC) are actinic, which means they are capable of causing chemical reactions. Wavelengths below 180 nm are of little practical biological significance since the atmosphere readily absorbs them.

F.4.2.2 Biosafety Cabinet UV Light

Long-term exposure to UV light may be used for disinfecting surfaces and air; however, UV light is not recommended or necessary for use inside biosafety cabinets (BSCs). This is because UV light is limited by many factors (see bulleted list below) as a disinfectant and harmful to human tissue. Other means of disinfection (e.g., chemical) are recommended for use inside BSCs.

UV light's ability to disinfect inside BSCs is limited by a number of factors including:

- **Penetration:** UV light lacks penetrating power. Microorganisms beneath dust particles or beneath the work surface are not affected by the UV radiation.
- **Relative Humidity:** Humidity decreases the effectiveness of UV light. Antimicrobial effects of UV light drops off precipitously above 70% relative humidity.
- **Temperature and Air Movement:** Optimum temperature for UV light output is 77 to 80°F. Temperatures below this optimum temperature result in reduced output of the antimicrobial wavelength. Moving air tends to cool the lamp below its optimum operating temperature and results in reduced output.
- **Lamp Cleanliness:** Dust and dirt can block the antimicrobial effectiveness of UV lights. UV lamps need to be cleaned weekly with an alcohol and water mixture.
- **Lamp Age:** The intensity of UV light emitted from UV lamps decreases with age, and bulb ratings (hours of use) may vary by manufacturer. UV lamps need to be checked periodically (approximately every six months) to ensure the intensity and wavelength of UV light needed for antimicrobial activity is being emitted.

See Appendix E, Section E.5, of this manual for additional information on using UV light inside BSCs. If UV light is used as an antimicrobial but is not a required biosafety control, then maintenance and testing of the UV lights is not required for biosafety purposes. For example, germicides are used as the primary means of BSC disinfection, so maintenance and testing of the UV light inside the BSC is not required for biosafety purposes.

F.4.3 Ionizing Radiation

Ionizing radiation is radiation of sufficiently high energy to cause ionization in the medium through which it passes. This radiation may be of a stream of high-energy particles (e.g. electrons, protons, alpha particles) or short-wavelength electromagnetic radiation (e.g., ultraviolet, X-rays, gamma rays). This type of radiation can cause extensive damage to the molecular structure of a substance either as a result of the direct transfer of energy to its atoms or molecules, or as a result of the secondary electrons released by ionization. The effect of ionizing radiation in biological tissue can be very serious, usually as a consequence of the ejection of an electron from a water molecule and the oxidizing or reducing effects of highly reactive species. Biological effects on living cells may include DNA damage and mutations.

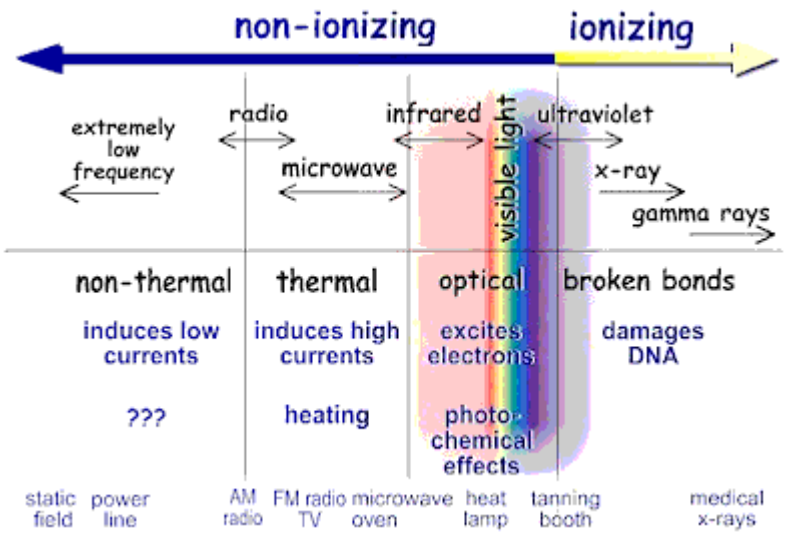

Ionizing and nonionizing radiation. Source: Wikipedia, "Nonionizing Radiation" (February 2010).

Different types of ionizing radiation display different degrees of penetration and may be used to sterilize equipment (e.g., medical instruments) or biological materials (e.g., inside human cadaver bones). Use of ionizing radiation as an antimicrobial requires established and specialized methods known to sterilize specific items.

F.4.4 Visible Light

Strong visible light can decrease bacterial viability. Drying laundry on a clothesline is an example of disinfection by using detergents and strong visible light.

F.4.5 Filtration (HEPA Filters)

Filtration is used as an antimicrobial treatment for air and liquids.

- High-efficiency particulate air (HEPA) filters are used to filter air flowing into aseptic areas (e.g., the work area inside a BSC) and out of potentially contaminated areas (e.g., exhaust from a BSC). See Section 5.6.4.2(a) and Appendix E of this manual for additional HEPA filter and BSC information.
- Filtration is commonly used when materials are heat labile, but sterilization is not necessarily achieved unless the filter has very small filter pores. Smaller filter pores will also slow filtration speed.

F.5 Autoclave Sterilization and Safety

This section provides general information and guidelines on autoclave principles, operation, and maintenance typically needed to sterilize materials or equipment and ensure operator safety. **Autoclave** is a piece of equipment with a chamber that is used to sterilize items by applying wet heat (i.e., high-pressure steam) at temperatures above the normal boiling point of water and pressures above normal atmospheric pressure.

Autoclaves are used to sterilize laboratory equipment or materials such as glassware, media, reagents, or waste. Autoclaves are commonly used because they are a dependable means of

achieving the necessary level of killing efficacy (or sterility assurance level) for most biological materials. In addition, autoclaves do not generate other chemical antimicrobial waste or sources of contamination. See Section F.2.1.1 for general information on sterilization and killing efficacy.

Autoclaves must be operated and monitored properly to achieve sterility and safety. Operator safety is a concern because autoclaves may pose physical hazards (e.g., heat, steam, pressure) and biological hazards.

F.5.1 Autoclaves and Sterilization

Autoclaves achieve higher sterilization efficacy in part because they generate wet-heat temperatures (e.g., 121°C or 250°F) higher than those achieved under standard atmospheric pressure (i.e., 100°C or 212°F). Exposure of material in an autoclave to 121°C (250°F) for 15 or more minutes is typically sufficient for sterilization, but the material's temperature must be 121°C before the time to achieve sterilization is started. Large items, large volumes, and items that are poorly penetrated by the autoclave's steam may take much longer than 15 minutes to sterilize. If penetration of moisture into the item is blocked, sterilization may not be achieved.

Autoclave conditions critical to ensuring reliable sterilization methods are proper temperature and time and the complete replacement of autoclave chamber air with steam (i.e., no entrapment of air). Some autoclaves utilize a steam-activated exhaust valve that remains open during the replacement of air by live steam until the steam triggers the valve to close. Others utilize a precycle vacuum to remove air prior to steam introduction.

Standard autoclave conditions for the types of materials that need sterilization should be established. Autoclave treatment conditions to achieve sterility will vary in relation to the volume of material treated, volume of the autoclave, the contamination level, the moisture content, and other factors. Treatment conditions for typical materials are listed below:

- Laundry: 121°C (250°F) for a minimum of 30 minutes.
- Trash: 121°C (250°F) for at least 45 minutes per bag. Size of the autoclave and size of the bags greatly affect sterilization time. Large bags in a small autoclave may require 90 minutes or more.
- Glassware: 121°C (250°F) for a minimum of 25 minutes.
- Liquids: 121°C (250°F) for 25 minutes for each gallon.
- Animals and bedding: Steam autoclaving is not recommended (sterilization time required would be at least 8 hours). Incineration in an approved facility is the recommended treatment of these wastes.

F.5.2 Autoclave Operation and Safety

This section provides general autoclave operation information and guidelines that should be used when applicable to the operation and as needed to ensure operator safety and sterilization. In addition, specific requirements and operational procedures noted in the autoclave owner's manual should be followed since each autoclave may have unique characteristics. The owner's manual should be readily available to answer autoclave operational questions.

F.5.2.1 Autoclave Instruction

The supervisor and work lead must ensure that the autoclave operator understands the autoclave hazards, controls needed to protect themselves, and any procedures necessary to accomplish sterilization for biosafety purposes.

F.5.2.2 Autoclave Operation Modes

Autoclaves typically use different combinations and patterns of high heat, vacuum, and pressure to sterilize the load. These combinations and patterns are used in autoclave run cycles or *runs* and are based on the type of material to be sterilized. General types of runs include *liquids* for any type of water-based solutions, *dry goods with vacuum*, and *dry goods without vacuum*. Autoclaves often have an additional *drying* cycle in which hot air is drawn through the chamber to dry materials after sterilization. Controls for different autoclaves vary, so the manufacturer's instructions regarding loading, load sizes, cycle types, and settings should be carefully followed. Additional information typical of these different run cycles is listed below:

- Liquids Run. This run is longer than the other two runs, but uses lower temperatures to minimize evaporation of the liquids being sterilized.
- Dry Goods with Vacuum Run. This run moves steam and heat into the deepest parts of large bags or bundles of materials and provides the best conditions for killing resistant organisms. During this type of run, the chamber alternates between cycles of high pressure, steam, and vacuum. It is important that steam and pressure be able reach the entire load, so bag closures should be carefully loosened once they are in the autoclave.
- Dry Goods without Vacuum Run. This run pressurizes the chamber with steam for the duration of the cycle and then returns to normal. This process is used primarily for items that have been cleaned but need to be sterilized. Materials should be packed so that the heat and pressure can readily reach the whole load.

F.5.2.3 Autoclave Container Selection

Bags, pans, and other containers are used in the autoclave to provide primary and secondary containment for the materials and items that need to be autoclaved. Additional considerations and practices regarding these containers include:

- Polypropylene Autoclave Bags. Autoclave or biohazard bags that may be used to contain solid materials are tear-resistant but can be punctured or burst in the autoclave. These bags should therefore be placed in a rigid container during autoclaving. Bags are available in a variety of sizes, and some are printed with an indicator that changes color when processed.
- Polypropylene Containers and Pans. Polypropylene is a plastic capable of withstanding autoclaving, but it is resistant to heat transfer. Materials contained in a polypropylene pan will therefore take longer to autoclave than the same materials in a stainless steel pan. The time required to sterilize material in a polypropylene container may be reduced by removing the container's lid, turning the container on its side, or selecting a container with the lowest sides and widest diameter that will fit in the autoclave.
- Stainless Steel Containers and Pans. Stainless steel is a good conductor of heat and is less likely to increase sterilizing time, but it is more expensive than polypropylene.

F.5.2.4 Autoclave Preparation and Loading

- Wear long pants, closed-toe shoes, body protection such as a lab coat, gloves, and safety glasses or goggles.
- Before loading the autoclave, check inside the autoclave for any items left behind by the previous user that could pose a hazard (e.g., sharps), and then clean the drain strainer.
- Load the autoclave properly according to manufacturer's recommendations. Typical loading practices are listed below.
- Do not autoclave items containing materials such as corrosives, solvents, volatiles, or radioactive materials that may contaminate the autoclave, create an inhalation hazard, or explode.
- Use autoclave bags and autoclavable polypropylene or stainless steel pans. Other plastics may melt.
- Load liquids as follows:
  - Fill liquid containers only half full.
  - Loosen caps or use vented closures so that heated and expanding liquids and vapors do not cause explosion of bottles or tubes.
  - Use only borosilicate glass (e.g., Pyrex™ or Kimax™) that can withstand the high autoclave temperature.
  - Use a pan with a solid bottom and walls to contain the liquid and catch spills.
- Load autoclave bags as follows:
  - Put bags into pans to catch spills.
  - Gather bags loosely at the top and secure the top with a large rubber band or autoclave tape. This will create an opening through which steam can penetrate. Bags are impermeable to steam and therefore should not be twisted and taped shut.
- Load dry goods such as glassware as follows:
  - Check plastic materials to ensure they are compatible with the autoclave.
  - Put individual glassware pieces within a heat-resistant plastic tray on a shelf or rack and not on the autoclave bottom or floor.
  - Add 1/4 to 1/2 inch of water to the tray so the bottles will heat evenly.
- Leave space between items in the load to allow steam circulation.

F.5.2.5 Autoclave Cycle and Time Selection

Ensure the door to the autoclave is fully closed and latched, and the correct cycle and time has been selected before starting the cycle. Cycle selection should be based on the type of items and packs to be autoclaved:

- Use liquid cycle with slow exhaust when autoclaving liquids to prevent contents from boiling over.
- Use fast exhaust cycle for glassware.
- Use fast exhaust and dry cycle for wrapped items.

Time selection should be based on the items' sizes, volumes, insulating capacity, and other characteristics as follows:

- Take into account the size of the items to be autoclaved. Larger items with more volume take longer to autoclave. For example, a 2-liter flask containing 1 liter of liquid takes longer to sterilize than four 500 ml flasks that each contain 250 ml of liquid.

- Materials with a high insulating capacity such as animal bedding or high-sided polypropylene containers increase the time needed for the load to reach sterilizing temperatures.
- Autoclave bags containing biological waste should be autoclaved for 50 minutes to ensure decontamination.

F.5.2.6 Removing Autoclave Loads

Practices that should be used to prevent the operator from being injured or burned while removing the load from the autoclave include:

- Wear long pants, closed-toe shoes, body protection such as a lab coat, safety glasses or goggles, and heat-resistant gloves to open the autoclave door and remove nonliquid items from the autoclave.
- When handling large volumes of liquid, wear waterproof boots (e.g., rubber), a rubber or plastic apron that extends past the top of the boots, and sleeve protectors in addition to the clothing and personal protective equipment listed above.
- Check that the run cycle is finished and the chamber pressure is zero.
- Open the door in the following manner to prevent burns caused by steam rushing out the door: Stand behind the door, slowly open the door a crack, and keep head and hands away from the opening.
- Allow liquids to cool for 10 to 20 minutes before removing the load from the autoclave. Liquids removed too soon may boil up and out of the container and burn the operator. Then let the liquids cool for an extended period (e.g., one hour) before touching the load with ungloved hands. Be sure others in the area know a heat hazard is present.
- Allow loads containing only dry glassware to cool for 5 minutes before removing the load from the autoclave. Then let the glassware cool for about 15 minutes before touching with ungloved hands.

F.5.2.7 Autoclave Material Staging

The following guidelines apply to staging materials for autoclaving and cleaning:

- Materials or equipment that will be reused and are contaminated with biohazardous material or waste should be autoclaved before being washed and stored.
- Laboratories and other areas where materials or equipment are staged for autoclaving or cleaning should have separate areas or containers for items designated as “Biohazardous—To Be Autoclaved” and “Not Biohazardous—To Be Cleaned.”
- Biohazardous materials or equipment being staged for autoclaving should be sterilized or safely confined and identified at the close of each workday. Such items should not be placed in autoclaves overnight in anticipation of autoclaving the next day.

F.5.2.8 Burn Emergencies

If you are burned, seek medical treatment as soon as possible. Burns to the face, third-degree burns, or burns over large areas of the body should be treated as emergencies. The LBNL emergency phone number should be called. Minor burns should be treated by using first aid procedures. These procedures include immersing the burn immediately in cool water, removing clothing from the burn area, and keeping the injured area cool for at least 5 minutes and preferably longer. Any burns to the face or eye or any burns that blister should be seen by a

physician. Regardless of the degree of severity, report the burn to your supervisor and Health Services as an occupational injury.

F.5.3 Autoclave Maintenance and Monitoring

Assurance is needed that the autoclave is operating properly and sterilizing the load. Assurance includes routine autoclave maintenance, monitoring autoclave conditions, and maintaining documentation.

Maintenance described in the autoclave owner's manual should be performed to ensure the autoclave is operating properly. This maintenance typically includes periodic maintenance performed by a qualified technician and more frequent maintenance procedures performed by the operator.

Monitoring the sterilization process and efficacy typically includes the use of different monitoring methods including:

- Mechanical Monitoring. Mechanical monitoring, a secondary method for ensuring sterilization, involves observing and recording physical aspects of the cycle such as temperature, pressure, or time. Thermometers, pressure gauges, clocks, and logs are commonly used to observe and record the run's physical parameters. Some autoclaves have recording devices to assist in recording run cycle conditions.
- Chemical Monitoring. Chemical monitoring uses chemical indicators that change color or physical form when an autoclave bag or pack is exposed to certain autoclave temperatures. Examples include autoclave tape and special markings on autoclave bags that are used as external indicators on the outside of the load. These indicators are typically considered process indicators since they only show that the item has been processed through the autoclave at a certain temperature, but they do not show that:
  - Sterilization has been achieved or that a complete sterilization cycle has occurred.
  - Temperature was achieved in the innermost parts of the load unless they are carefully placed in the load. An easy way to check interior temperature is to wrap an item such as a plastic test tube or pipette tip with autoclave tape, attach string to the item, and put the item deep into the load. Then, tape the other end of the string to the outside of the bag so that the indicator can be pulled out of the bag. Recover the indicator after the run and confirm that it has also changed color. Warning: do not open a bag of material that may present a hazard to the operator (e.g., Risk Group 2 material) to bury an indicator inside.
- Biological Monitoring. Biological monitoring (or spore testing) uses live, resistant bacterial spores on strips or in self-contained vials as biological indicators that sterilization has been achieved as demonstrated by the death of the bacterial spores. Use of appropriate biological indicators at locations throughout the autoclave is considered the best and most direct indicator of sterilization. The biological indicator most widely used for wet heat sterilization is *Bacillus stearothermophilus* spores. Biological indicators must be used to test the efficiency of the autoclave when the autoclave is used as the final treatment of the item prior to disposal as medical waste/biohazardous waste, or when the item will be reused and is contaminated with RG2 biological materials. In these cases, tests should be performed periodically, and test records should be maintained for three years.

The autoclave and process should be evaluated and corrected if monitoring indicates that the autoclave run conditions were not correct, temperatures were not sufficient as shown by

chemical indicators, or spores on biological indicators were not killed. Discontinue use of the autoclave if it is not working properly and post a "do not use" sign. Mechanical failures need to be attended by a qualified autoclave technician. When the problem is corrected, the load should be re-autoclaved to ensure sterility.

F.6 References

- Abedon, Stephen T., Ohio State University, supplemental lecture Web site on Control of Microbial Growth dated November 21, 1998, and Web page on Sterilization and Disinfection dated March 28, 2003
- Alfa Medical article: Sterilization – Instrumental in Patient Safety, Chris H. Miller, accessed 2010
- America Biological Safety Association (ABSA) Position Paper on the Use of Ultraviolet Lights in Biological Safety Cabinets, December 2000
- *Biosafety in Microbiological and Biomedical Laboratories* (BMBL), fifth edition, CDC and NIH, Appendix B: Decontamination and Disinfection
- Canadian Centre for Occupational Health and Safety (CCOHS), OSH Answers, Physical Agents, Ultraviolet Radiation Web site, February 2010
- CDC Morbidity and Mortality Week Report (MMWR), Recommendations and Reports, Guidelines for Infection Control in Dental Care Health Care Settings, Appendix A – Regulatory Framework for Disinfectants and Sterilants, December 19, 2003, 52(RR17), 62-64
- Cornell University, Office of EH&S, Autoclave Safety, accessed 2010
- Food and Drug Administration (FDA), radiation-emitting products, ultraviolet radiation Web site, February 2010
- Lawrence Berkeley National Laboratory, *Biosafety Manual*, 1998
- Leadley, Sam, Pam Sojda, and N.Y. Pavilion, Using Bleach as a Germicide for Manual Washing Feeding Equipment, Cooperative Extension System Web page, November 2008.
- OSHA Standards Interpretation and Compliance Letters, EPA-registered disinfectants for HIV/HBV, February 28, 1997
- OSHA Instruction CPL 02-02-069, Enforcement Procedures for the Occupational Exposure to Bloodborne Pathogens, January 27, 2001. Section D (Methods of Compliance), Section 23 regarding appropriate disinfectant
- University of California at Berkeley, EH&S Fact Sheet No. 33 – Using Autoclaves Safely, February 19, 2003
- University of Maryland, Biological Safety – Autoclave Safety and Procedures, accessed 2010
- University of South Carolina, Autoclave Safety Policy, March 3, 2008
- Wikipedia articles: iodophor, ionizing radiation, irradiation, nonionizing radiation, surfactant, ultraviolet, ultraviolet germicidal irradiation, accessed 2010

Appendix G

Biological Spills and Cleanup

G.1 Introduction and Scope

Hazards need to be assessed and a safe response must be implemented for each spill situation. This appendix provides general guidelines for decontamination and cleanup of various types of biological materials, including:

- Precleanup considerations
- Biological spill outside a biosafety cabinet (BSC)
- Biohazardous spill inside a BSC
- Centrifuge malfunction or spill
- Radioactive and biohazardous spill outside a BSC
- Chemical and biohazardous spill outside a BSC
- Small dead animal, nest, or droppings cleanup

Note the following *Biosafety Manual* sections and guidelines for additional information related to biological spills and cleanup:

- Incident, Accident, and Emergency Response (Section 5.10)
  Especially note the LBNL *Emergency Response Guide* flip chart posted in your area or online for overall response guidelines for a variety of common emergencies including biological spills and personal injury. This guide also provides both emergency and nonemergency telephone numbers.

- Decontamination, Waste, and Decommissioning (Section 5.7)
  Especially note the *Medical and Biohazardous Waste Generator's Guide* (PUB-3095) for disposal of medical/biohazardous waste. Also note the *Guidelines for Generators to Meet HWHF Acceptance Requirements for Hazardous, Radioactive, and Mixed Wastes at Berkeley Lab* (PUB-3092).

G.2 Precleanup Considerations

Generally, you may clean a biological spill when the conditions listed below are present. If these conditions do not exist, request assistance from your supervisor or call the LBNL emergency and nonemergency telephone numbers listed in the *Emergency Response Guide* as appropriate.

Precleanup conditions:

- You understand the biological and other hazards and cleanup procedures.
- Your Job Hazards Analysis (JHA) and training sufficiently cover the work to be completed.
- There is no potential for personal exposure, injury, or environmental damage.
- The appropriate spill cleanup materials and equipment are available.
- Two people can cleanup the spill thoroughly within an hour.

G.3 Biological Spill outside a Biosafety Cabinet

1. If you spilled a Risk Group 1 (RG1) material, or a small dilute amount of an RG2 material, remove any contaminated clothing, wash contaminated body areas with soap and water, and proceed to Step 6.
2. If you spilled a significant amount (e.g., 100 ml or more) of a RG2 or higher material, hold your breath, leave the room immediately, and close the door.
3. Warn others not to enter the contaminated area. Get help as needed and call the LBNL emergency or nonemergency phone numbers in the *Emergency Response Guide*. If you leave the area, post a sign warning others to not enter the area.
4. Remove and put contaminated clothing into a container for biohazardous waste disposal or autoclaving, and thoroughly wash hands and face.
5. Wait 30 minutes before re-entering the area to allow dissipation of airborne biological materials (aerosols) created by the spill. Put on personal protective equipment (PPE) before re-entering the room.
6. Put on the following PPE: lab coat or gown, safety glasses, and double gloves. If the risk of the material or contamination is high, wear additional appropriate PPE such as a respirator, jumpsuit with tight-fitting wrists, or shoe covers.
7. Cover the spill with paper towels or other absorbent material to prevent liquid migration and aerosol production.
8. Gently pour or squirt a freshly prepared solution of 10% household bleach or other appropriate disinfectant around the edges and then into the center of the spill area until the towels are soaked with the disinfectant.
9. Let the disinfectant stay in contact with the spilled material for at least 10 minutes, and up to 20 minutes for larger volumes or RG2 materials.
10. Use paper towels to wipe up the spill, working from the edges into the center of the spill. If sharps or sharp fragments such as glass might be in the spill, do not touch the spill materials with gloved hands. In this case, use a dustpan and squeegee or disposable cardboard to scoop up the spill materials and sharps.
11. Clean the spill areas with paper towels soaked with disinfectant, and then with paper towels wetted with water.

12. Dispose of or autoclave contaminated items. Dispose of contaminated items using biohazardous waste containers, biohazard bags, sharps containers, and other means specified in the *Medical and Biohazardous Waste Generator's Guide* (PUB-3095). Reusable and autoclavable items may be decontaminated using an autoclave bag and pan in an on-site autoclave.
13. Remove and dispose of PPE, or place coats in lab coat laundry bin. Wash hands with soap and water.
14. Report spill, exposure, and injury incidents to your work lead or supervisor and in accordance with Section 5.10 of this manual.

Biohazardous and sharps spill cleanup. Source: Health and Human Services (HHS) Centers for Disease Control and Prevention (CDC) Office of Health and Safety, (, *Biosafety in the Laboratory*) *presentation (accessed from the Web in May 2010)*

G.4 Biohazardous Spill inside a Biosafety Cabinet

This procedure assumes the spill of biohazardous material of significant quantity or risk inside a biosafety cabinet (BSC).

1. Ensure the BSC is operating and continues to operate during this procedure so as to prevent airborne contaminants from escaping the cabinet.
2. Put on the following PPE: lab coat or gown, safety glasses, and chemical-resistant double gloves. Wear additional PPE (e.g., respirator or goggles) as needed based on the risk of the material, contamination, or splashing.
3. Spray or wipe walls, work surfaces, and equipment with a disinfectant that is effective against the agents that may be present. A 1% solution of an iodophor decontaminant (Wescodyne or equivalent) is effective against most viruses, fungi, vegetative bacteria, and most nonencysted amoeba. A decontaminant detergent has the advantage of detergent activity, which is important because extraneous organic substances frequently interfere with the reaction between microorganisms and the active agent of the decontaminant.
4. Flood the BSC's top work surface tray with disinfectant. In a Class II BSC, also flood with disinfectant the drain pans and catch basins below the work surface. Allow the disinfectant to stand for 10 to15 minutes.
5. Remove excess disinfectant from the tray by wiping with a sponge or cloth soaked in disinfectant. In a Class II BSC, drain the BSC's top work surface into the BSC catch

basin, lift out the work surface and removable exhaust grilles, and wipe the top and bottom (underside) surfaces with a sponge or cloth soaked in disinfectant. Replace the work surface and grilles. Drain the disinfectant from the BSC base into an appropriate container. Place the container with disinfectant, gloves, cloth, or sponge in an autoclave pan, and then autoclave according to standard procedures.

6. Report spill, exposure, and injury incidents to your work lead or supervisor and in accordance with Section 5.10 of this manual.

G.5 Centrifuge Malfunction or Spill

This procedure assumes that the following types of centrifuge events have occurred, especially if RG2 materials are involved: the spill of biological material in the centrifuge, significant mechanical failure (e.g., rotor failure), or centrifuge tube or container breakage. Evidence of such conditions might include noises during centrifuge operation or visual signs of failure or leakage when the centrifuge is opened. Note that breakage of tubes and leakage of fluid into the centrifuge wells or cups during centrifugation may release relatively few agents into the air. However, if a tube breaks and leaks in the centrifuge chamber, then aerosols and droplets may be created and dispersed.

In the event of a centrifuge malfunction or spill, follow the following steps:

1. Turn centrifuge off immediately. Keep the centrifuge lid closed and latched.
2. Notify others.
3. Evacuate the laboratory if hazardous aerosols may have been generated. Close the door, post a biohazard spill sign at the lab door, and stay out of the laboratory for 30 minutes.
4. For spill cleanup, the operator should wear PPE (i.e., gloves, lab coat, eye protection), remove debris, and clean and disinfect centrifuge interior, rotors, safety cups, or buckets in accordance with the manufacturer's instructions.
5. Place any contaminated PPE and all cleanup materials in a biohazardous waste container. Wash hands and any exposed skin surfaces with soap and water.
6. Report spill, exposure, and injury incidents to your work lead or supervisor in accordance with Section 5.10 of this manual.

G.6 Radioactive and Biohazardous Spill

This procedure assumes the spill of material outside a biosafety cabinet that has both radioactive and biohazardous concerns. In this case, the biological component of the spill should be inactivated prior to disposal of the spilled materials as radioactive waste. Call the Radiation Protection Group at extension 7277 or 510-486-7277 for instruction and assistance.

<u>Spill of RG1 material or small amount (e.g., less than 100 ml) of dilute RG2 material:</u>

1. Warn others not to enter the contaminated area. Post a sign on the door as needed.

2. Remove any contaminated PPE (e.g., lab coat, gloves) if there is a risk of exposure to biohazardous agents, and isolate PPE in a plastic bag or appropriate container.
3. Contact the Radiation Protection Group (RPG) 24/7 at extension 7277 or 510-486-7277 to report the incident. If RPG is responding to the spill location, wait until RPG arrives before proceeding with the steps below.
4. Monitor yourself for radioactive contamination. If contaminated, wait for RPG assistance.
5. Thoroughly wash your hands and face if there is a risk of exposure to biohazardous agents.
6. Put on the following PPE: lab coat or gown, safety glasses, and double gloves. If the risk of the material or contamination is high, wear additional appropriate PPE such as respirator, jumpsuit with tight-fitting wrists, or shoe covers.
7. Cover the spill with paper towels or other absorbent material to prevent liquid migration and aerosol production.
8. Gently pour or squirt a freshly prepared solution of 10% household bleach or other appropriate disinfectant around the edges and then into the center of the spill area until the towels are soaked with the disinfectant.
9. Let the disinfectant stay in contact with the spilled material for at least 10 minutes, and up to 20 minutes for larger volumes or RG2 materials.
10. Use paper towels to wipe up the spill, working from the edges into the center of the spill. If sharps or sharp fragments such as glass might be in the spill, do not touch the spill materials with gloved hands. In this case, use a dustpan and squeegee or disposable cardboard to scoop up the spill materials and sharps.
11. Clean the spill areas with paper towels soaked with disinfectant, and then with paper towels wetted with water.
12. Place all contaminated materials into a plastic bag, and place the bag in the appropriate radiation waste container. Monitor for radiation contamination all potentially contaminated items that are not placed in the radiation waste container. Decontaminate and resurvey these items as necessary.
13. Report spill, exposure, and injury incidents to your work lead or supervisor and in accordance with Section 5.10 of this section.

<u>Spill of Risk Group 2 material greater than 100 ml:</u>

1. If you spilled a significant amount (e.g., 100 ml or more) of an RG2 material, hold your breath, leave the room immediately, and close the door.
2. Warn others not to enter the contaminated area.
3. If possible, remain stationary and request assistance from others to contact the Radiation Protection Group (RPG). Contact RPG 24/7 at extension 7277 or 510-486-7277 for assistance.
4. Remove any contaminated PPE (e.g., lab coat, gloves) if there is a risk of exposure to biohazardous agents, and isolate PPE in a plastic bag or appropriate container.
5. Thoroughly wash your hands and face if there is a risk of exposure to biohazardous agents.
6. Proceed with the remaining steps after arrival of RPG.
7. Wait 30 minutes before reentering the area to allow dissipation of airborne biological materials (aerosols) created by the spill. Put on PPE before reentering the room.
8. Follow Steps 6 through 13 noted in the previous section titled “RG1 materials or small amounts (e.g., less than 100 ml) of dilute RG2 materials.”

G.7 Chemical and Biohazardous Spill

This procedure assumes the spill of material outside a biosafety cabinet, the material has both chemical and biological hazards, the chemical in the material is considered a hazardous waste, and the chemical has not already rendered the biological material nonviable or inactive.

1. Prior to starting your research, determine which chemical disinfectant(s) and absorbent materials are compatible with the chemical(s) that may become biologically contaminated and whether the contaminated chemical(s) can be autoclaved. Autoclaves heat materials at high temperatures and pressures, and the autoclave operator may be exposed to chemical vapors when the autoclave is opened.
2. If you spilled a significant amount (e.g., 100 ml or more) of a RG2 material, hold your breath, leave the room immediately, and close the door.
3. Warn others not to enter the contaminated area. Get help as needed. If you leave the area, post a sign warning others to not enter the area.
4. Remove and put contaminated clothing in container lined with a plastic bag for eventual decontamination, autoclaving, or disposal. Thoroughly wash hands and face. If clothing is chemically contaminated, autoclaving may not be advisable.
5. If you evacuated the laboratory as stated in Step 2, call the LBNL emergency or nonemergency phone numbers in the *Emergency Response Guide* and wait 30 minutes before reentering the area to allow dissipation of airborne biological materials (aerosols) created by the spill. Put on PPE before reentering the room.
6. Consult the LBNL Chemical Hygiene and Safety Plan for chemical spill response procedures. If the chemical(s) in the spill present a greater hazard than the biological agent(s), proceed with chemical decontamination first.
7. Put on at least the following PPE: lab coat or gown, safety glasses, and chemical-resistant double gloves. If the risk of the material or contamination is high, wear additional appropriate PPE such as respirator, jumpsuit with tight-fitting wrists, or shoe covers.
8. Cover the spill with an absorbent material or towel that will not react chemically with the spilled chemical. Towels will prevent liquid migration and aerosol production.
9. Use a disinfectant that is compatible with the chemical(s) in the spill. Gently pour or squirt the disinfectant around the edges and then into the center of the spill area until the absorbent material or towel is soaked with the disinfectant.
10. Let the disinfectant stay in contact with the spilled material for at least 10 minutes, and up to 20 minutes for larger volumes or RG2 materials.
11. Use chemically compatible towels, dustpan, squeeges, or cardboard to scoop and wipe up the spill, working from the edges into the center of the spill. If there may be sharps or sharp fragments such as glass in the spill, do not touch the spill materials with gloved hands.
12. Clean the spill areas with towels soaked with disinfectant, and then with towels wetted with water.
13. If the chemical(s) are compatible with autoclaving, contaminated materials (paper towels, absorbent, glass, liquid, gloves, dustpan, squeegee, etc.) may also be placed into autoclave bags and an autoclave pan. Cover the pan with aluminum foil and autoclave according to standard directions. After autoclaving, the now-sterile materials

may require being disposed of as hazardous chemical waste via the LBNL Waste Management Group.

14. If the chemical(s) are not autoclavable (or if you do not know whether they are autoclavable), then transfer the disinfected materials into a screw cap container, and place the container in the Satellite Accumulation Area.
15. Report spill, exposure, and injury incidents to your work lead or supervisor and in accordance with Section 5.10 of this section.

G.8 Cleanup of Small Dead Animals, Nests, or Droppings

The following general procedure should be used as a guideline for cleanup of small dead animals, nests, or droppings. This procedure may need to be adapted depending on the nature of the materials and situation. Contact the Facilities Division via the Facilities Work Request Center if assistance is needed due to a pest infestation or to the nature or size of the concern.

1. Wear PPE such as reusable or disposable rubber gloves and safety glasses when handling decontaminant solutions, dead animals, or cleaning up contaminated materials. Use double disposable gloves if possible and appropriate. Determine if disposable or cleanable protective clothing is also needed.
2. Clean up dead animals, nests, droppings or contaminated food by first spraying or soaking the item with an appropriate disinfectant such as 10% household bleach, Lysol®, or other appropriate janitorial disinfectant (see Appendix F, Sections F.2.3 of this manual). Allow the disinfectant sufficient time to decontaminate the item (e.g., 10 minutes).
3. If possible and appropriate, pick up the decontaminated item with an impervious barrier such as a plastic bag placed over the item. Place the decontaminated item into a plastic bag, tie the bag shut, place the bag into a second bag, and tie the second bag shut.
4. Clean up localized gross surface contamination as needed by spraying or soaking with disinfectant and using disposable paper towels. Place waste materials in a plastic bag, remove outer contaminated disposable gloves, and double bag the waste materials.
5. Dispose of the bags of waste in the general trash. Use an outside dumpster as needed to prevent odor problems.
6. Clean contaminated surfaces or floors as needed. Use a solution of water, detergent, and disinfectant to mop floors or wipe surfaces. Steam clean or shampoo carpets and upholstered furniture. Do not vacuum or dry sweep surfaces before wet cleaning. Pour mop or cleaning wastewater into a drain that is connected to the building sanitary sewer system.
7. Remove PPE, and then clean it or dispose of it.
8. Remove any potentially contaminated clothing and launder separately with detergent and hot water.
9. Wash hands with soap and water.

The State of California encourages the reporting of dead birds and squirrels to assist state agencies in tracking disease. This reporting is optional at LBNL and involves keeping the animal for 24 hours without decontamination or freezing. Note the California West Nile Virus Web site for additional information and online reporting.

Appendix H

Transportation and Shipping

H.1 Introduction and Scope

This appendix provides requirements, guidelines, and direction on transporting and shipping biological materials as needed to safely move the material from one location to another. This includes:

- Employee transport of biological materials between laboratories, between buildings, in motor vehicles, and on LBNL buses
- Use of LBNL Receiving, Transportation, and Shipping
- Shipping through LBNL Shipping by a contracted shipping company (e.g., **common carrier** such as FedEx or UPS)
- Packaging, transportation, and shipping in accordance with:
  - **U.S. Department of Transportation (DOT) Hazardous Material Regulations (HMR)** for movement of biological materials in public right-of-ways within the U.S.
  - **International Air Transport Association (IATA) Dangerous Goods Regulations (DGR)** for shipment of biological materials (e.g., infectious substances) by air.

Employees who wish to transport or ship a biological material should use this appendix (starting in Section H.2) to assess if the material is a regulated biological material and select a mode and process for moving the material. Modes and processes detailed in this appendix cover safe movement of all biological materials and potential shipping and transportation regulatory issues, although most LBNL biological materials that need to be moved are not regulated. Regulatory requirements for packaging, transporting, and shipping are applicable only if the material is:

- Moved in vehicles, airplanes, railcars, or vessels via public right-of-ways such as roadways, airways, railways, and sea lanes that are accessible to the public, and
- A regulated biological material (i.e., categorized by DOT HMR or IATA DGR as an infectious substance or genetically modified organism).

This appendix does not cover the following topics:

- Transportation and shipping of nonbiological hazardous materials. These topics are covered in the following LBNL documents:
  - The PUB-3000, Sections 5.8.11 and 5.8.13: Provides overview of services provided by the LBNL Environment, Health, and Safety (EH&S) Division to transport radioactive and hazardous materials, and by LBNL Transportation Services to ship them.
  - The *Chemical Hygiene and Safety Plan* (CHSP), "Chemical Procurement, Transportation, and Inventory": Provides instructions for moving hazardous material research samples and small quantities by hand or in a passenger vehicle.
- Other regulatory requirements related to the import, export, and transfer of biological materials. See Appendix I of this manual for information on these topics.

H.2 How to Determine Transportation Mode and Requirements

LBNL employees should use the following steps to determine the transportation mode and requirements needed to transport or ship a biological material:

1. Determine the desired mode of transportation or shipping.
2. Use Table H-1 to determine if the desired transportation mode can be used. If needed, use Section H.4 to determine if the material is subject to IATA or DOT shipping regulations. Section H.4 can also be used for definitions of terms.
3. Use Section H.3 to determine the requirements or process for packaging, labeling, transporting, or shipping the material.

Table H-1
Transportation Modes and Biological Materials Not Allowed

General Transport Mode	Specific Transport Mode	Biological Materials that are Not Allowed
Personal Transportation 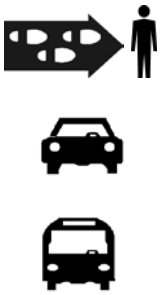	Hand carry between laboratories	No restrictions on types of biological materials.
	Hand carry between buildings	No restrictions on types of biological materials.
	Personal motor vehicle*	Regulated** biological materials are not allowed except for regulated materials contained in human or animal samples (including, but not limited to, secreta, excreta, blood and its components, tissue and tissue fluids, cells, and body parts) being transported for research, diagnosis, investigational activities, or disease treatment or prevention; or that are biological products. Samples containing Category A infectious substances are not allowed.
	LBNL bus or other public transportation	Regulated** biological materials or other biological materials that may present a detrimental risk to the health of humans or other organisms either directly through infection or indirectly through damage to the environment are not allowed.
Licensed Transporter 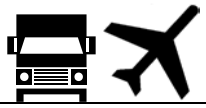	LBNL Transportation Department	No restrictions on types of biological materials.
	Common carrier	No restrictions on types of biological materials unless restricted by the carrier.

Footnotes:

* Personal transport in a motor vehicle means transportation in a private or government passenger vehicle such as a car, van, or pickup truck.

** Materials that are and are not subject to DOT and IATA regulations are described in Section H.4 of this appendix.

Here is an example of how to apply Steps 1, 2, and 3 above:

> An LBNL research employee wants to transport his established human cells in a personal vehicle between two LBNL sites in direct support of his research project. According to Table H-1, this is allowable because it is a human sample being transported solely for the purpose of research, regardless of whether or not the human cells are a regulated biological material. According to the second bullet in Section H.4.1, these cells would not be considered regulated biological materials unless they contained infectious agents or were collected from individuals suspected of having an infectious disease; however, this determination does not matter, because this is a human sample being transported in direct support of a research project. The researcher must package and label the human cells according to Section H.3.1.3 (Personal Transport in Motor Vehicle). The researcher may then give the packaged cells to another person who is affiliated with the research for transport in a personal vehicle if this individual knows the cells are in the vehicle, is informed of the applicable requirements in this appendix, and is doing the transport solely for the purpose of supporting the research.

H.3 Requirements and Processes for Receiving, Transporting, and Shipping

This section presents requirements and processes related to receiving, transporting, and shipping biological materials by an LBNL employee, LBNL Transportation or Shipping Groups, or a common carrier. See Section H.2 to determine if the desired mode of transportation or shipping can be used to transport the biological material.

H.3.1 Employee Transportation of Materials

This section covers minimum requirements for transporting biological materials by an LBNL employee without the use of the LBNL Transportation Group or a common carrier. General objectives that should be accomplished whenever employees transport biological materials include:

- Biological materials will not be spilled in the event of accident (e.g., due to a person tripping or a vehicle accident).
- The identity of biological materials, their hazards or lack of hazards, and owners may be explained by people transporting the materials and determined by other people who may find the materials.
- Exterior surfaces of containers will not be contaminated with biological materials.
- Regulated biological materials being transported in public right-of-ways (e.g., in vehicles on roads or in airplanes) will be packaged and transported in accordance with DOT and IATA regulations.

H.3.1.1 Hand-Carry Transport between Laboratories

Hand-carry transport between laboratories generally means an LBNL employee is hand-carrying the biological material in a container and walking between laboratories in the same building or buildings that are closely connected and designed for pedestrian traffic. Requirements and precautions for such transport include:

- Primary or secondary containers that prevent leakage are required. When Risk Group (RG) 2 or bloodborne pathogen (BBP) materials are transported, a biohazard label must be displayed on the exterior of the outermost container. When possible and appropriate for the work and risk:
  - Primary containers of biological material should be break-resistant (e.g., plastic), leakproof, have secure caps or lids, and be disinfected on the outside.
  - Primary containers of biological material should be placed in a secondary container that prevents leakage. Racks or packing should be used inside the secondary container as needed to keep the primary containers upright and prevent breakage.
- The primary or secondary containers should be labeled with the identity of the contents, ownership information, and any appropriate biohazard information. Such labeling may not be needed if the primary container(s) and secondary container will remain in continuous possession of the person(s) transporting and processing the materials.
- Remove gloves and wash hands after preparing biological materials for transport. Lab coat, clean gloves, and eye protection should be worn during transport if there is a risk of unexpected exposure, contamination, or spillage.
- Medical/biohazardous waste must be transported in accordance with the container and labeling requirements in *Medical and Biohazardous Waste Generator's Guide* (PUB-3095).

H.3.1.2 Hand-Carry Transport between Buildings

Hand-carry transport between buildings generally means the packaged biological material is carried by an LBNL employee who is walking between nonadjacent LBNL or University of California, Berkeley (UCB) buildings. Requirements and precautions for such transport include:

- Biological materials transported by this means are not subject to DOT and IATA regulations, but the biological materials should be transported according to the packaging and labeling criteria described in Section H.3.1.3 (Personal Transportation in Motor Vehicle) of this appendix.
- Employees transporting materials by this means should take precautions to ensure they can walk safely between buildings. Precautions may include having one hand free to open doors and hold stair rails, use of a hand truck, and wearing slip-resistant shoes.
- Medical/biohazardous waste cannot be transported off LBNL sites (e.g., between discontinuous LBNL locations or different institutions). Medical/biohazardous waste must be transported in accordance with the container and labeling requirements in *Medical and Biohazardous Waste Generator's Guide* (PUB-3095).

H.3.1.3 Personal Transportation in a Motor Vehicle

Personal transportation in a motor vehicle means transportation by an LBNL employee in a private or government passenger vehicle such as a car, van, or pickup truck. Requirements for such transport of biological materials are described in this section. These requirements meet the DOT HMR requirements for transporting materials of trade:

Materials allowed. Materials that may be transported in a motor vehicle include unregulated biological materials noted in Section H.4.1, the regulated materials noted as an exception in

Table H-1, and dry ice. Other regulated biological materials or medical/biohazardous waste are not allowed. Transportation of any regulated biological material must be in direct support of a principal business (e.g., research project), and the principal business must not be motor vehicle transportation (e.g., a company paid to transport items).

Packaging and labeling. An inner container and outer package are required.

- Manufacturer's packaging. When applicable, each regulated biological material must be contained and packaged in the manufacturer's original container and packaging, or a container and packaging of equal or greater strength and integrity.

- Inner containers:
  - Use break-resistant (e.g., plastic) containers, if possible.
  - Liquids must be in a leakproof container. Lids on inner containers must have a positive means of closure. For example, a screw-type cap should be used instead of parafilm, aluminum foil, or a stopper.
  - Container(s) must be disinfected as needed for safety and should be placed in a Ziploc® bag or an equivalent secondary spill container.
  - Information must be placed on or with the container(s) as needed to clearly communicate the container's contents, hazards, and ownership. Each individual container must be labeled with enough information to identify its contents. In addition, the container(s) or secondary bag(s) must also be labeled with the identity of the material, the name and phone number of the sender, the name and phone number of the recipient (if different than the sender), and hazard information. Hazard information includes a biohazard label if the material is biohazardous (e.g., RG2), any words needed to explain the hazard, or words indicating the material is not hazardous.
  - Containers for sharps (i.e., sharps container) must be constructed of a rigid material resistant to punctures and securely closed to prevent leaks or punctures.

Leakproof plastic containers with screw caps. Source: VWR.

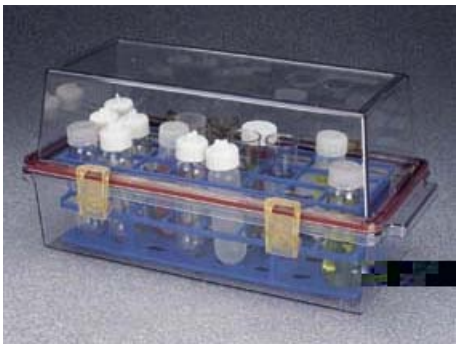

Containers inside break-resistant and leakproof carrier. Source: VWR (May 2010).

Ice chest with secure lid as an outer package. Source: unidentified.

Biohazard label for inner and outer containers. Source: 29 CFR 1910.1030(g)(1)

- Outer packaging:
  - The outer packaging must be a strong and tight packaging made of a rigid material. It must also be securely closed. Examples include a cardboard, plastic, or metal box or pail with a secure lid. A plastic carrier that is leakproof, easy to clean, and has a secure lid is typically the best package for biological materials (e.g., ice chest or enclosed laboratory tube carrier).
  - Packing material or racks must be used between the inner container(s) and outer packaging as needed to keep the container(s) upright, cushion the container(s), and prevent the container(s) from shifting or damage.
  - Sufficient absorbent material must be inside the outer packaging to absorb the entire contents of all inner liquid container(s).
  - The exterior of the outer packaging must be labeled with the same information required for the inner container. The common name(s) or shipping name(s) of the materials must be used.
  - Outer packaging must be secured against shifting inside the vehicle during transport. Generally, the safest place to secure biological materials is in a vehicle trunk. If hazardous materials are also transported, these materials must be placed in the trunk or truck bed.

Material quantity of regulated biological material:

- Each inner container must not be more than 0.5 kg (1.1 lbs) or 0.5 L (17 ounces), and an aggregate contained within the entire outer package must not be more than 4 kg (8.8 lbs) or 4 L (1 gallon), or
- A single inner container containing not more than 16 kg (35.2 lbs) or 16 L (4.2 gallons) that is inside a single outer package.

Ice and dry Ice. Ice and dry ice may be used inside the package to keep the biological materials cold. Ice must be packaged so that any melting water will be contained inside the outer packaging. Dry ice is frozen carbon dioxide that will sublimate into gas, so dry ice must be placed in packaging that is not gas-tight (e.g., ice chest). Dry ice is only regulated as a hazardous material in air transport, but is not regulated in ground (e.g., motor vehicle) transport in the U.S.

Hazard communication. The operator of a motor vehicle that contains a regulated biological material must be informed of the presence of the material, and must be informed of the requirements in this section.

H.3.1.4 Personal Transportation on an LBNL Bus

Personal transportation on an LBNL bus means the packaged biological material is carried by an LBNL employee on an LBNL shuttle bus. The following materials must not be transported on an LBNL bus: regulated biological materials, medical/biohazardous waste, or other biological materials that may present a detrimental risk to the health of humans or other organisms, either directly through infection or indirectly through damage to the environment. Any other biological materials transported by this means are not subject to transportation regulations, but the biological materials should be transported according to the packaging and labeling criteria described in Section H.3.1.3 (Personal Transportation in a Motor Vehicle) above.

H.3.2 LBNL Receiving, Transportation, and Shipping

Receiving, transportation, and shipping of biological materials are conducted institutionally from Building 69 by Resource Services in the Facilities Division. These services are conducted in accordance with PUB-3000, Section 5.8 (*Traffic and Transportation*), DOT HMR, IATA DGR, and by personnel with appropriate regulatory qualifications. For questions about shipping or receiving biological materials, contact LBNL Shipping at 510-486-5084 or LBNL Receiving at 510-486-4935.

H.3.2.1 LBNL Receiving

Biological materials that are shipped by a contracted shipping company (i.e., common carrier) to LBNL must be received by LBNL Receiving and are typically delivered to the requestor via LBNL Transportation in the packaging and with the documentation that was received from the common carrier.

H.3.2.2 LBNL Transportation

This section covers the pickup and delivery of biological materials or items that contain biological materials (e.g., freezers) within LBNL by LBNL Transportation or a carrier authorized by Transportation. Transportation of materials must be requested through the Facilities Work Request Center, and a completed **Transportation Authorization Form (TAF)** must be attached to each item to be transported. Additional directions include:

- When placing a work request for transportation, the requestor will be asked if the item to be transported contains hazardous materials. The requestor should declare that the item does not contain hazardous materials if the item to be transported does not contain regulated biological material as described in Section H.4 or other hazardous materials.
- If the item does not contain a regulated biological or other hazardous material, the requestor should package and label the biological materials as described in Section H.3.1.3 (Personal Transportation in Motor Vehicle) of this appendix.
- If the item contains a regulated biological or other hazardous material, the requestor should consider personal transportation of the item in a motor vehicle (see Section H.3.1.3 of this appendix) if allowed (see Table H-1), or contact LBNL Shipping for advice and directions.

- See Section H.3.2.3 below if the item will also be shipped by a common carrier after transportation within LBNL.

H.3.2.3 LBNL and Common Carrier Shipping

Shipment of biological materials by a common carrier out of LBNL must be conducted by LBNL Shipping. Information and assistance must be provided by the sender. Use the following guidelines for shipping:

- Note directions for transportation and pickup of materials in Section H.3.2.2.
- An LBNL Shipping Document must also accompany all material leaving LBNL. Directions for completing this form can be found on the LBNL Shipping Web site. This form requires the sender to describe the item and material to be shipped, and asks if the item and material is a regulated hazardous material (i.e., contains Dangerous Goods).
- The sender may use the lists of unregulated and regulated materials in Section H.4 to answer the Dangerous Goods question on the form in regards to biological materials. Section H.4 can also be used to determine what information should be included in the form's description section. The sender is responsible for providing a description of the item and biological material and its potential biological or hazardous materials risks so that LBNL Shipping can correctly categorize and ship the material.
- Trained personnel in LBNL Shipping determine if the material is subject to DOT and IATA shipping regulations. They also ensure the material is correctly packaged, labeled, and documented for shipment. If the material is a regulated biological material, LBNL Shipping will work with the sender to ensure the shipping requirements are implemented at the sender's LBNL location.

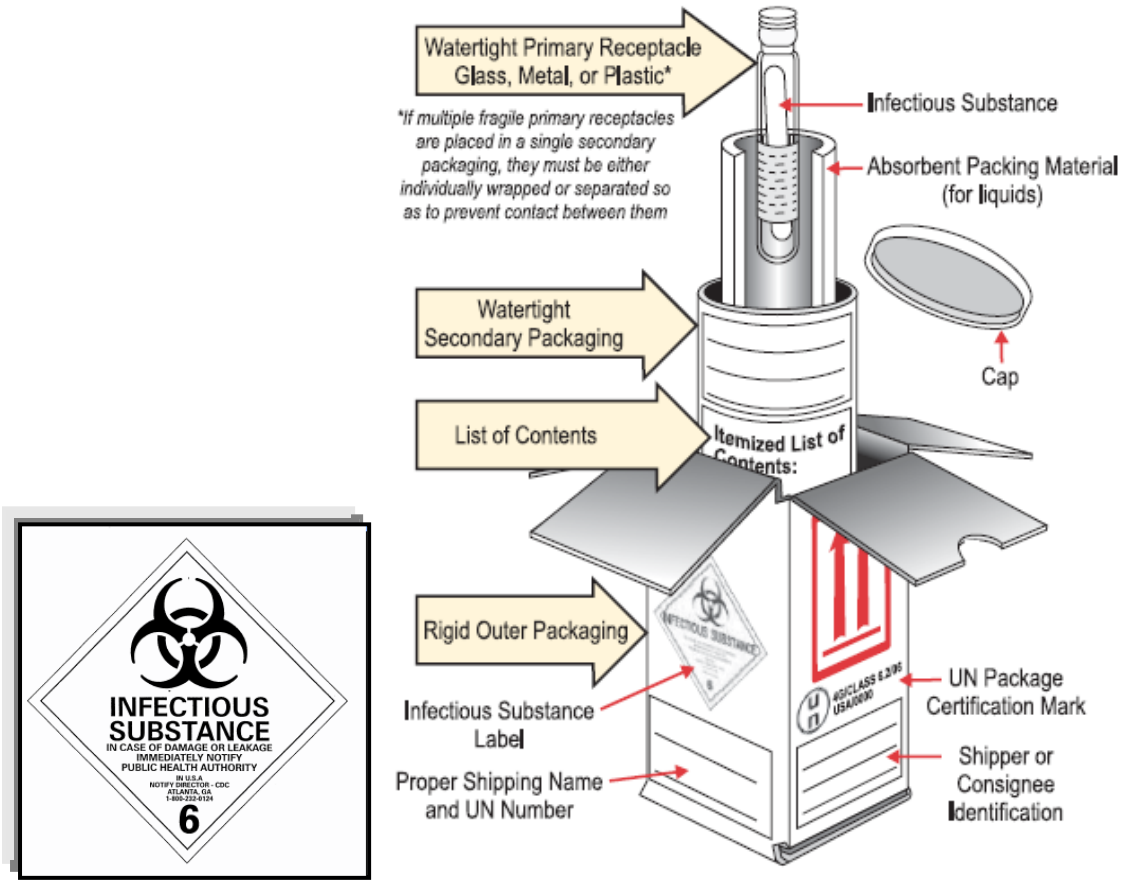

Packaging and labeling as an infectious substance. Transporting Infectious Substances Safely, US DOT Document PHH50-0079-0706 (October 1, 2006).

H.4 Unregulated and Regulated Materials

This section provides information on which biological materials are or are not subject to DOT HMR and IATA DGR infectious substance and genetically modified organism shipping regulations. LBNL employees should use this information to assist in selecting or requesting appropriate modes of transport for their biological materials.

H.4.1 Unregulated Biological Materials

The following materials are not subject to DOT and IATA infectious substance shipping regulations:

- Substances that do not contain infectious substances or that are unlikely to cause disease in humans or animals.
- Noninfectious biological materials from humans, animals, or plants. Examples include noninfectious cells, tissue culture, blood, or plasma from individuals not suspected of having an infectious disease, DNA, RNA, or other genetic elements.
- Substances containing microorganisms that are nonpathogenic to humans or animals.

- Substances that have been neutralized or inactivated so that they no longer pose a health risk.
- Environmental samples that are not considered to pose a significant risk of infection (e.g., food and water samples).
- Dried blood spots.
- Fecal occult blood screening tests.
- An infectious substance (other than a Category A infectious substance) contained in a patient sample being transported for research, diagnosis, investigational activities, or disease treatment and prevention; or a biological product when such materials are being transported by a private carrier in a motor vehicle used exclusively to transport such materials.
- Blood or blood components that have been collected for the purpose of transfusion or the preparation of blood products to be used for transfusion or transplantation.
- Tissues or organs intended for use in transplantation.
- A material with a low probability of containing an infectious disease, or where the concentration of the infectious substance is at a level that naturally occurs in the environment and cannot cause disease when exposure to it occurs. Examples of these materials include foodstuffs and environmental samples (e.g., samples of water, dust, or mold).
- A biological product, including an experimental or investigational product or component of a product, subject to federal approval, permit, review, or licensing requirements such as those required by the Food and Drug Administration (FDA) or U.S. Department of Agriculture (USDA).

H.4.2 Regulated Biological Materials

The materials presented below are subject to DOT and IATA shipping regulations for infectious substances and genetically modified organisms:

Infectious substances are materials regulated for shipping. These materials are known to be, or are reasonably suspected to contain, an animal or human pathogen. A pathogen is a virus, microorganism (including bacteria, plasmids, or other genetic elements), proteinaceous infectious particle (prion), or a recombinant microorganism (hybrid or mutant) that is known or reasonably expected to cause disease in humans or animals. Microorganisms that are unlikely to cause human or animal diseases are not subject to biological shipping regulations.

- **Category A infectious substances** are materials capable of causing permanent disability, or a life threatening or fatal disease in humans or animals when exposure to them occurs. Category A infectious substances are shipped as infectious substances affecting humans (UN2814) or infectious substances affecting animals (UN2900). Examples of Category A infectious substances are listed in a table in the infectious substances section of the IATA Dangerous Goods Regulations.

- **Category B infectious substances** are materials that do not meet Category A criteria. Category B infectious substances are shipped as UN3373.

Patient specimens or **diagnostic specimens** are any human or animal materials including but not limited to excreta, secreta, blood, blood components, tissue, and tissue fluids being shipped for the purpose of diagnosis. Patient specimens that have a minimal likelihood of containing

pathogens are regulated materials, but they are also exempt from many shipping requirements. Professional judgment is used to determine if a specimen contains pathogens and should be based on the patient's medical history, symptoms, local conditions, and individual circumstances. The outer package must be marked "Exempt human specimen" or "Exempt animal specimen." If there is more than a "minimal likelihood" that a patient specimen contains pathogens, it must be shipped as a Category A or Category B infectious substance.

Biological products are materials that are derived from living organisms and manufactured for use in the prevention, diagnosis, treatment, or cure of disease in humans or animals and are certified by the USDA, FDA, or other national authority. Examples of biological products include certain viruses, therapeutic serums, toxins, antitoxins, vaccines, blood, and blood products. Biological products transported for final packaging, distribution, or use by medical professionals are not subject to biological shipping regulations. Biological products that do not meet these criteria must be shipped as UN2814, UN2900, or UN3373 when appropriate.

Genetically Modified Organisms (GMO) or microorganisms (GMMO) are organisms whose genetic material has been purposely altered through genetic engineering in a way that does not occur naturally. GMOs and GMMOs that are not infectious but that can alter animals, plants, or microorganisms in a way that is not normally the result of natural reproduction are considered a miscellaneous hazard (Class 9) and are shipped as UN3245. GMOs and GMMOs that are infectious must be shipped as UN2814, UN2900, or UN3373.

H.5 References and Resources

- International Air Transport Association (IATA) Dangerous Goods Regulations (DGR), Section 3.6.2, "Division 6.2 : Infectious Substances," and Section 3.9, "Class 9: Miscellaneous Dangerous Goods, Genetically Modified Microorganisms and Genetically Modified Organisms"
- PUB-3095, *Medical and Biohazardous Waste Generator Guidelines*, LBNL, latest revision
- *Transporting Infectious Substances Safely*, guide to changes effective October 1, 2006, US DOT Document PHH50-0079-0706
- *UNH Shipment of Biological Materials Manual,* University of New Hampshire, updated March 30, 2007
- *UNH Guide to Shipping with Dry Ice*, April 9, 2007
- U.S. Department of Transportation (DOT) Hazardous Material Regulations (HMR), 49 CFR 171.8 (Definitions), 173.134 (Infectious Substances), and 173.6 (Materials of Trade)
- U.S. Postal Service (USPS) Domestic Mail Manual Section 10.17 (Infectious Substances)

Appendix I

Import, Export, and Transfer Restrictions

I.1 Introduction and Scope

Borders

Materials being transferred (i.e., imported, exported, or transferred) from one location or person to another may be subject to regulatory restrictions or permit requirements. United States (U.S.), state, and foreign government agencies restrict and permit the movement of certain biological materials across borders to prevent threats to public health, agriculture, environment, and national security.

This appendix provides an outline of U.S.-based regulatory restrictions, permits, and lists related to the transfer (i.e., import, export, or transfer) of biological and related materials. This outline provides LBNL personnel with a starting point for determining whether such materials are potentially regulated by U.S. agencies, and whether there are restrictions or permits applicable to transfer of the material or equipment. Contact the LBNL Biosafety Office for additional advice.

This appendix does not provide comprehensive information about restricted materials, or transfer or shipping requirements. Additional LBNL policy information may be found in the following documents:

- Web links and references to external agencies provided in this appendix
- Appendix H of this manual for transportation and shipping requirements
- The *Berkeley Lab Export Control Manual* for general LBNL export control requirements

The supervisor, work lead, person transferring the biological material, person requesting transfer of the biological material, and permit holder all have LBNL or legal responsibilities for complying with transfer requirements, obtaining any required permits, and following the conditions of the permit. Regulatory requirements, permits, and permit conditions related to the transfer of biological materials should also be included in the Biosafety Work Authorization. The LBNL Biosafety Office and Institutional Biosafety Committee (IBC) will review the researcher's assessment and documentation of transfer requirements during the work authorization review process.

I.2 Importing or Transfer into the U.S. and California

There may be restrictions or permits required for the transfer of biological material between collaborators, or for importing material into the U.S. from foreign countries or in some cases into California or the San Francisco Bay Area.

Shipments and persons entering the U.S. are processed by the U.S. **Customs and Border Protection (CBP)**, which is a branch of the Department of Homeland Security. The CBP checks materials transported by travelers and shipments for proper import permits, packaging, and

labeling. This check may include opening and inspecting the package. Noted concerns may be reported to other U.S. agencies. In addition, the **California Department of Food and Agriculture (CDFA)** and the U.S. Department of Agriculture-Animal and Plant Health Inspection Service (USDA-APHIS) do not allow the import of certain materials that may be infested with invasive species identified as pests by the state. CDFA also has border protection stations that inspect vehicles for commodities that may be infested with pests. The person importing the material (the "importer") should therefore:

- Obtain an import permit from the appropriate government organization prior to shipment, if required.
- Package and label the material according to permit and shipping requirements.
- Consider including a courtesy letter (e.g., a letter that describes the contents in detail and any hazards, concerns, permit requirements, or lack thereof) with the shipment.

Prior to shipment of the material, the person importing the material (the "importer") should contact the appropriate government organization to determine its transfer requirements. The importer is legally responsible for ensuring that personnel package, label, and ship regulated material from the foreign country according to the regulating agency's requirements and shipping regulations. Shipping labels are often also issued to the importer with the permit. The importer must send the labels and one or more copies of the permit to the shipper. The permit and labels inform CBP and other agencies of the package contents.

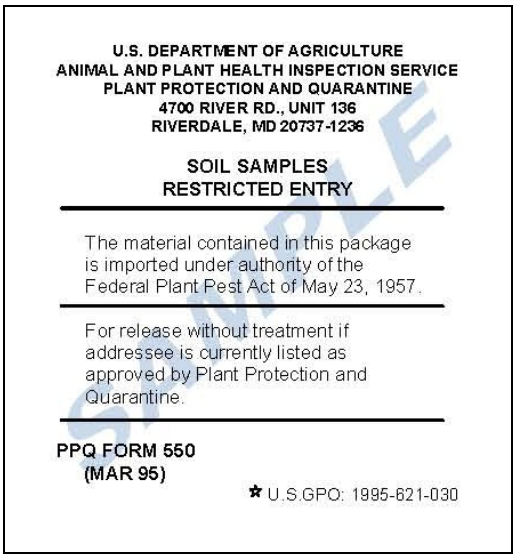
U.S. DEPARTMENT OF AGRICULTURE
ANIMAL AND PLANT HEALTH INSPECTION SERVICE
PLANT PROTECTION AND QUARANTINE
4700 RIVER RD., UNIT 136
RIVERDALE, MD 20737-1236

SOIL SAMPLES
RESTRICTED ENTRY

The material contained in this package is imported under authority of the Federal Plant Pest Act of May 23, 1957.

For release without treatment if addressee is currently listed as approved by Plant Protection and Quarantine.

PPQ FORM 550
(MAR 95)

U.S.GPO: 1995-621-030

SAMPLE

USDA-APHIS label for shipping soil samples under a soil permit. Source: LBNL Environment, Health, and Safety (EH&S).

I.2.1 CDC and APHIS Select Agent and Toxin Restrictions

Select agents and toxins are specific pathogenic agents and toxins that pose a severe threat to human, animal, and plant health because of their potential for use as biological weapons. They are therefore regulated by the Department of Health and Human Services, Centers for Disease Control and Prevention (HHS-CDC) and the , USDA-APHIS. See Section 3.3.2.5 of this manual

for additional information, and Appendix B, Sections B.2 and B.3, for a list of select agents and toxins. Consult the most recent online list at http://www.selectagents.gov/.

Only facilities registered with and individuals approved by CDC or APHIS are allowed to possess, have access to, or transfer the specific agents and strains or toxins for which they are approved. These activities must be conducted in accordance with the LBNL Biosafety, Security, and Incident Response Plan for Select Agents. Transfers of select agents or toxins must be conducted with approval and involvement of the LBNL EH&S Biosafety Office.

I.2.2 APHIS Agricultural Permits

The USDA-APHIS defends America's animal and plant resources from agricultural pests and diseases by regulating materials, organisms, or agents that may harm domestic or native animals or plants, or natural resources. These materials, organisms, or agents may cause harm directly (e.g., predator or pathogen) or indirectly (e.g., vector). Generally, APHIS requires a permit or another document issued to an individual to import, export, or store regulated materials from or to locations outside the continental U.S. or between U.S. states.

Section 3.3.3 of this manual provides an overview of APHIS agency branches along with categories and examples of regulated materials, organisms, and agents. The following sections provide additional agency details, requirements, and Web links for more information.

I.2.2.1 APHIS Plant Health Permits

The **Plant Protection and Quarantine (PPQ)** branch of APHIS safeguards agriculture and natural resources from the risks associated with the entry, establishment, or spread of animal and plant pests and noxious weeds to ensure an abundant, high-quality, and varied food supply. PPQ provides the following resources:

- PPQ Permits Web page: Provides permit applications for soil, plant pests, plants, plant products, weeds, etc.
- The PPQ Soil Circular: Defines what is and is not soil, and provides information about soil treatments and permits. **Soil** is a mixture of inorganic and organic materials, when the organic materials are unidentifiable plant and/or animal parts. This mixture can support biological activity and therefore carry and introduce harmful pests or diseases from one location to another.

- The PPQ Plant Pest Program: Provides a list of select insects, mollusks, nematodes, plant diseases, or noxious weeds that are considered pests.

- The PPQ Cooperative Agricultural Pest Survey Program: Provides lists of National Pests of Concern and State Pests of Concern.
- A list of fungal plant pathogens for each U.S. state is currently being developed by PPQ to help expedite the permit process for obtaining research isolates. The list will be based on the Widely Prevalent Fungi of the United States Web site.

Appendix B, Section B.4, of this manual also provides lists of bacterial, fungal, and viral plant pathogens that may be regulated by USDA.

I.2.2.2 APHIS Animal Health Permits

The **Veterinary Services (VS)** branch of APHIS protects and improves the health, quality, and marketability of our nation's animals, animal products, and veterinary biologics by preventing, controlling, and/or eliminating animal diseases, and monitoring and promoting animal health and productivity. VS provides the following information on permits, types of materials, and diseases:

- VS animal health permits for importing controlled material, organisms, vectors, animal products, cell cultures and their products, live animals, semen, and embryos.
- **Center for Import Export (NCIE)** in APHIS VS regulates the import, export, and interstate movement of all animals and animal products (e.g., tissues, blood, and semen), including those that are genetically engineered.
- **Center for Veterinary Biologics (CVB)** in APHIS VS regulates and requires veterinary biologics permits for veterinary biologics. Examples of veterinary biologics include vaccines, antibodies, diagnostic kits, and certain immunomodulators, including those developed using genetically engineered organisms.
- Animal health disease information.
- Animal diseases by animal species.

I.2.2.3 APHIS Genetically Engineered Organisms Permits

APHIS uses the term **biotechnology** to mean the use of recombinant DNA technology, or **genetic engineering (GE)** to modify living organisms. APHIS regulates certain GE organisms that may pose a risk to plant or animal health. In addition, APHIS participates in programs that use biotechnology to identify and control plant and animal pests. Below is a list of the regulatory agency branches and requirements for genetically engineered organisms and facilities.

- **Biotechnology Regulatory Services (BRS)** in APHIS uses permits, notifications, and petitions to regulate the importation, interstate movement, or environmental release of certain GE organisms including plants, insects, or microbes that may be plant pests. When transgenic *Drosophila* developed for research need to be moved, BRS requires a *Drosophila* Courtesy Permit Application or an APHIS 2000 Form to confirm they are not plant pests and therefore do not need to be regulated.
- See NCIE and CVB in Section I.2.2.2 above.

I.2.3 CDC Agents or Vectors of Human Disease Permits

CDC requires a U.S. Public Health Service permit to import an etiologic agent, or material containing an etiologic agent, host, or vector of human disease. A permit is also required for interstate transfer if the original CDC import permit was issued on the condition that any subsequent transfer of the material would require a permit. According to the CDC Etiologic Agent Import Permit Program, the materials listed below require a permit.

- **Etiologic agents.** Etiologic agents that are microorganisms, infectious agents, and toxins that cause disease in humans (e.g., bacteria, bacterial toxins, viruses, fungi,

rickettsiae, protozoans, and parasites) require a CDC permit. Etiologic agents also include naturally occurring, bioengineered, or synthesized components of an etiologic agent when the component causes human disease. Examples of etiologic agents are listed in Appendix B, Sections B.2 and B.3.

- **Biological materials.** Biological materials that are known or suspected of containing an etiologic agent also require a CDC permit. Examples include unsterilized specimens of human and animal matter (e.g., tissue, blood, body discharges, fluids, excretions or similar material) known or suspected of containing an etiologic agent.

- **Hosts and Vectors**

  - **Animals.** Any animal known or suspected of being infected with an organism capable of causing disease that is transmissible to humans may require a CDC permit. See the CDC animal importation Web site for more information.
  - **Bats.** All live bats require an import permit from the CDC and the U.S. Fish and Wildlife Services.
  - **Arthropods.** Any living insect or other arthropod that is known or suspected of containing an etiologic agent requires a CDC permit.
  - **Snails.** Snail species capable of transmitting a human pathogen require a CDC permit.

I.2.4 Food and Drug Administration Import Program

With the exception of most meat and poultry, all food, drugs, biologics, cosmetics, medical devices, and electronic products that emit radiation are subject to examination by the U.S. Food and Drug Administration (FDA) when they are being imported or offered for import into the U.S. Most meat and poultry products are regulated by USDA. FDA requires various notifications or approvals prior to importing. See the FDA Import Program Web site for more information.

I.2.5 Fish and Wildlife Service Permits

The import, export, or re-export of a wildlife or plant specimen may be regulated by a conservation law or treaty (e.g., Endangered Species Act) that is implemented by the U.S. Fish & Wildlife Service (FWS). These laws are part of domestic and international conservation efforts to protect wildlife and plants subject to international trade. Wildlife is any living or dead wild animal, its parts, and products made from the animal. Wildlife not only includes mammals, birds, reptiles, amphibians, and fish, but also invertebrates such as insects, crustaceans, arthropods, mollusks, and coelenterates. The FWS Permits Web site should be used to determine whether a wildlife or plant specimen requires a permit and how to obtain a permit. Table I-1 provides examples of wildlife or plant specimens that may require a permit to export or import.

Table I-1
Wildlife or Plant Specimens That May Require an FWS Permit

Export	Import
• African elephant ivory • Animals • Artificially propagated plants • Asian elephant ivory • Biological samples • Captive-born export • Circuses/traveling animal exhibitions • Goldenseal • Ginseng • Marine mammals • Museum specimens • Personal pet • Plants • Raptors • Trophies by taxidermist • Wildlife	• African elephant • African elephant ivory • African leopard • Argali • Asian elephant ivory • Biological samples • Birds • Bontebok • Circuses/traveling animal exhibitions • Marine mammals • Museum specimens • Personal pet • Plants • Polar bears • Scientific and zoological breeding or display • Sport hunted trophy • White rhinoceros • Wildlife

Source: adapted from the UNH Shipment of Biological Materials Manual, University of New Hampshire, March 30, 2007.

I.3 Exporting or Transfer from the U.S.

Controls for exporting from LBNL are outlined in the *Berkeley Lab Export Control Manual*. These export controls are designed to protect items and information that are important to the U.S. The controls are based on government rules and regulations that govern the transfer of the following items to non-U.S. entities or individuals, regardless of where or how the transfer takes place:

- Goods (systems, components, equipment, or materials)
- Technologies (technical data, information, or assistance)
- Software/codes (commercial or custom)

The *Berkeley Lab Export Control Manual* should be consulted for general export control requirements. This section of the *Biosafety Manual* only outlines U.S.-based regulatory restrictions and lists related to the export of biological materials.

Depending on the nature of the biological material, there may be restrictions or U.S. export permits required for the transfer of material to foreign countries. The country to which the material is being transferred may also require an import permit. If the material requires an export permit, the permit must be obtained from the appropriate government agency prior to transfer or shipment.

When leaving the U.S., travelers may be questioned or packages may be opened and inspected by any inspection service provided by other countries. The person exporting the material should therefore:

- Obtain an export permit from the appropriate government organization prior to shipment, if required.

- Package and label the material according to permit and shipping requirements.
- Consider including a courtesy letter (e.g., a letter that describes the contents in detail and any hazards, concerns, permit requirements or lack thereof) with the shipment.

Several agencies and export control lists outlined in the next sections are involved in controlling exports of biological agents that may be used as biological weapons. Since LBNL is not a Department of Energy (DOE) Defense Programs laboratory, the export controls of most relevance at LBNL are those administered by the Department of Commerce, Bureau of Industry and Security, under the Commerce Control List (see Section I.3.1).

I.3.1 Commerce Control List

The Department of Commerce controls the export of all goods, technologies, and software not regulated by another government agency. Because LBNL is not a DOE Defense Programs laboratory, the most relevant export controls are those administered by the Department of Commerce **Bureau of Industry and Security (BIS)**, which maintains the **Export Administration Regulations (EAR)** Database. An important component of EAR is the **Commerce Control List (CCL)**, a section of the regulations that lists specific goods, technologies, and software, the countries to which those items may or may not be exported, and any special restrictions or exceptions that may apply.

A permit may be required from the Commerce Department when exporting biological agents such as human, animal, and plant pathogens or toxins; genetic elements and genetically modified organisms; and products that might be used for culturing large amounts of agents. See Table I-2 for an example list of biological agents on the CCL. Consult the most recent online list in CCL Supplement No. 1 to Part 774 Category 1. Consult the BIS export controls Web site and *Berkeley Lab Export Control Manual* for additional information.

Table I-2
Commerce Control List of Biological Agents

Human Pathogens and Toxins	
Bacteria • *Bacillus anthracis* • *Brucella abortus* • *Brucella melitensis* • *Brucella suis* • *Burkholderia mallei (Pseudomonas mallei)* • *Burkholderia pseudomallei (Pseudomonas pseudomallei)* • *Chlamydia psittaci* • *Clostridium botulinum* • *Clostridium perfringens,* epsilon toxin producing types • Enterohaemorrhagic *Escherichia coli;* serotype O157 and other verotoxin producing serotypes • *Francisella tularensis* • *Salmonella typhi* • *Shigella dysenteriae* • *Vibrio cholerae* • *Yersinia pestis* **Toxins** • Abrin • Aflatoxins • Botulinum toxins • Cholera toxin • *Clostridium peifringens* toxins • Conotoxin • Diacetoxyscirpenol toxin • HT-2 toxin • Microcystin (Cyanginosin) • Modeccin toxin • Ricin • Saxitoxin • Shiga toxin • *Staphylococcus aureus* toxins • T-2 toxin • Tetrodotoxin • Verotoxin and other Shiga-like ribosome inactivating proteins • Volkensin toxin • Viscum Album Lectin 1 (Viscumin) **Fungi** • *Coccidioides immitis* • *Coccidioides posadasii*	**Viruses** • Chikungunya virus • Congo-Crimean haemorrhagic fever virus • Dengue fever virus • Eastern equine encephalitis virus • Ebola virus • Hantaan virus • Hendra virus (Equine morbillivirus) • Japanese encephalitis virus • Junin virus • Kyasanur Forest virus • Lassa fever virus • Louping ill virus • Lymphocytic choriomeningitis virus • Machupo virus • Marburg virus • Monkey pox virus • Murray Valley encephalitis virus • Nipah virus • Omsk haemorrhagic fever virus • Oropouche virus • Powassan virus • Pulmonary and renal syndrome-haemorrhagic fever viruses (Seoul, Dobrava, Puumala, Sin Nombre) • Rabies virus cultures • Rift Valley fever virus • Rocio virus • South American haemorrhagic fever virus (Sabia, Flexal, Guanarito) • St. Louis encephalitis virus • Tick-borne encephalitis virus (Russian Spring-Summer encephalitis virus) • Variola virus • Venezuelan equine encephalitis virus • Western equine encephalitis virus • White pox • Yellow fever virus **Rickettsiae** • *Barlonella quintana (Rochalimea quintana, Rickettsia quintana)* • *Coxiella burnetii* • *Rickettsia prowasecki* • *Rickettsia rickettsii*

Table I-2
Commerce Control List of Biological Agents
(Continued)

Animal Pathogens and Toxins	
Bacteria • *Mycoplasma mycoides* as: Mycoplasma mycoides subspecies mycoides SC (small colony) (a.k.a. contagious bovine pleuropneumonia); and Mycoplasma capricolum subspecies capripneumoniae (“strain F38”) **Viruses** • African horse sickness virus • African swine fever virus • Avian influenza (AI) viruses identified as highly pathogenic (HP) strains - see the EAR CCL • Bluetongue virus	**Viruses** (continued) • Foot and mouth disease virus • Goat pox virus • Lumpy skin disease virus • Lyssa virus • Newcastle disease virus • Peste des petits ruminants virus • Porcine enterovirus type 9 (swine vesicular disease virus) • Porcine herpes virus (Aujeszky's disease) • Rinderpest virus • Sheep pox virus • Swine fever virus (Hog cholera virus) • Teschen disease virus • Vesicular stomatitis virus
Plant Pathogens	
Bacteria • *Xanthomonas aibliineans* • *Xanthomonas campestris* pv. citri including strains referred to as *Xanthomonas campestris* pv.citri types A,B,C,D,E or otherwise classified as *Xanthomonas citri, Xanthomonas campestris* pv. *aurantifolia* or *Xanthomonas campestris* pv. *Citrumelo* • *Xanthomonas oryzae* pv. *oryzae* (*Pseudomonas campestris* pv. *oryzae*) • *Clavibacter michiganensis* subspecies *sepedonicus* (*Corynebacterium michiganensis* subspecies *sepedonicum* or *Corynebacterium sepedonicum*) • *Ralstonia solanacearum* Races 2 and 3 (*Pseudomonas solanacearum* Races 2 and 3, or *Burkholderia solanacearum* Races 2 and 3)	**Viruses** • Potato Andean latent tymovirus • Potato spindle tuber viroid **Fungi** • *Colletotrichum coffeanum* var.*virulans (Colletotrichum kahawae)* • *Cochliobo!us miyabeanus (Helminthosporium oryzae)* • *Magnaporthe grisea (pyricularia grisea/ pyricularia oryzae)* • *Microcyclus u!ei (Dothidella u!ei)* • *Puccinia graminis (Puccinia graminis* f.sp. *tritici)* • *Puccinia striiformis* (*Puccinia g!umarum*)

Table I-2
Commerce Control List of Biological Agents*
(Continued)

Genetic Elements and Genetically Modified Organisms	
• Genetic elements that contain nucleic acid sequences associated with the pathogenicity of controlled microorganisms • Genetic elements that contain nucleic acid sequences coding for any controlled "toxins" or "sub-units of toxins" **Technical Note:** Genetic elements include, inter alia, chromosomes, genomes, plasmids, transposons, and vectors, whether genetically modified or unmodified.	• Genetically modified organisms that contain nucleic acid sequences associated with the pathogenicity of controlled microorganisms • Genetically modified organisms that contain nucleic acid sequences coding for any controlled “toxins” or “sub-units of toxins”

Source: adapted from CCL Supplement No. 1 to Part 774 Category 1, pages 59 to 66 (April 20, 2010); and UNH Shipment of Biological Materials Manual (March 30, 2007).

I.3.2 U.S. Munitions List

It is unlikely that agents and substances on this munitions list would be used or exported from LBNL, but this section is provided so that personnel can understand what is covered by this list. The U.S. Department of State controls the export of "defense articles and defense services" under the **International Traffic in Arms Regulations (ITAR)**. Items in this category to be export controlled are placed on the **U.S. Munitions List (USML)**, a section of ITAR (Part 121) maintained by the U.S. State Department in conjunction with the U.S. Department of Defense.

The USML contains many categories of articles, including Category XIV (Toxicological Agents, Including Chemical Agents, Biological Agents, and Associated Equipment). Section (b) of this USML category states that biological materials include “Biological agents and biologically derived substances specifically developed, configured, adapted, or modified for the purpose of increasing their capability to produce casualties in humans or livestock, degrade equipment, or damage crops.” Such agents and substances are not typically used at LBNL, but the export of any item on the USML requires an export license issued by the U.S. State Department. Exports of all other products not covered by the USML are subject to the export jurisdiction of the U.S. Department of Commerce, BIS, as discussed in Section I.3.1.

I.3.3 Biological Weapons Convention Lists

The Convention on the Prohibition of the Development, Production, and Stockpiling of Bacteriological (Biological) and Toxin Weapons and on their Destruction, commonly known as the **Biological Weapons Convention (BWC),** has been in force since 1975. The BWC is the first multilateral disarmament treaty banning an entire category of weapons. It effectively prohibits the development, production, acquisition, transfer, retention, stockpiling, and use of biological and toxin weapons. The BWC is also a key element in the international community's efforts to address the proliferation of weapons of mass destruction. The U.S. and other countries participating in the **Australia Group (AG)** are States Parties to the BWC. The AG is an informal forum of countries that, through the harmonization of export controls, seeks to ensure that exports do not contribute to the development of chemical or biological weapons.

The AG maintains the following Common Control Lists of equipment and agents that require export control:

- Chemical weapons precursors
- Dual-use chemical manufacturing facilities and equipment and related technology and software
- Dual-use biological equipment and related technology and software
- Biological agents
- Plant pathogens
- Animal pathogens

U.S. export permits or licenses are not directly regulated by the AG nor covered by the BWC lists, since the BWC lists are related to international treaty and are not derived from U.S. regulations. It appears to the author of this LBNL *Biosafety Manual* section that the Department of Commerce BIS and U.S. Department of State are the U.S. agencies that have primary responsibility for enforcing U.S. exports related to the BWC. Sections I.3.1 and I.3.2 above should therefore be used to determine U.S. regulatory requirements related to the BWC lists.

The "Core List" of agents on the AG Common Control List appears to be the same or very similar to the agents on the BIS CCL presented above in Table I-2. Therefore, the Core List of agents on the BWC list is not relisted in this *Biosafety Manual*. However, the AG Common Control Lists also include a few additional agents that are not on the Core List. These additional agents are listed in Table I-3. It is not clear to the author of this *Biosafety Manual* section how or if these additional agents are regulated for U.S. export control.

Table I-3
BWC Agents Not On the Commerce Control List

Plant Pathogens – Items for Inclusion in Awareness-Raising Guidelines	
Bacteria • *Xylella fastidiosa* **Viruses** • Banana bunchy top virus	**Fungi** • *Deuterophoma tracheiphila* (syn. *Phoma tracheiphila*) • *Monilia rorei* (syn. *Moniliophthora rorei*)
Human Pathogens – Warning List [1]	
Bacteria • *Clostridium tetani* [2] • *Legionella pneumophila* • *Yersinia pseudotuberculosis*	

Source: The AG Common Control List of biological agents (October 2009) and plant pathogens (April 2005).

Table Footnotes:

[1] Biological agents are controlled when they are an isolated live culture of a pathogen agent, a preparation of a toxin that has been isolated or extracted from any source, or material including living material that has been deliberately inoculated or contaminated with the agent. Isolated live cultures of a pathogen agent include live cultures in dormant form or in dried preparations, whether the agent is natural, enhanced, or modified. An agent is covered by this list except when it is in the form of a vaccine. A vaccine is a medicinal product in a pharmaceutical formulation licensed by, or having marketing or clinical trial authorization from, the regulatory authorities of either the country of manufacture or of use, which is intended to stimulate a protective immunological response in humans or animals in order to prevent disease in those to whom or to which it is administered.

[2] AG recognizes that this organism is ubiquitous. However, since it has been acquired in the past as part of biological warfare programs, it is worthy of special caution.

I.4 References

- *Berkeley Lab Export Control Manual*
- Commerce Control List, Supplement No. 1 to Part 774 Category 1
- DOE Guidelines on Export Control and Nonproliferation, July 1999
- *UNH Shipment of Biological Materials Manual*, University of New Hampshire, updated March 30, 2007
- Web sites and Wikipedia articles of referenced government agencies and topics, accessed April 2010