CERTS Microgrid Laboratory Test Bed

R. H. Lasseter, *Fellow, IEEE*, J. H. Eto, *Member, IEEE*, B. Schenkman, J. Stevens, *Member, IEEE*, H. Volkmmer, *Member, IEEE*, D. Klapp, E. Linton, H. Hurtado, and J. Roy

***Abstract*--. CERTS Microgrid concept captures the emerging potential of distributed generation using a system approach. CERTS views generation and associated loads as a subsystem or a "microgrid". The sources can operate in parallel to the grid or can operate in island, providing UPS services. The system can disconnect from the utility during large events (i.e. faults, voltage collapses), but may also intentionally disconnect when the quality of power from the grid falls below certain standards. CERTS Microgrid concepts were demonstrated at a full-scale test bed built near Columbus, Ohio and operated by American Electric Power. The testing fully confirmed earlier research that had been conducted initially through analytical simulations, then through laboratory emulations, and finally through factory acceptance testing of individual microgrid components. The islanding and resynchronization method met all Institute of Electrical and Electronics Engineers Standard 1547 and power quality requirements. The electrical protection system was able to distinguish between normal and faulted operation. The controls were found to be robust under all conditions, including difficult motor starts and high impedance faults.**

Keywords: CHP, UPS, distributed generation, intentional islanding, inverters, microgrid, CERTS, power vs. frequency droop, voltage droop.

I. Introduction

CERTS Microgrid concepts where first formulated in 1998 as a cluster of micro-generators and storage with the ability to separate and isolate itself from the utility seamlessly with little or no disruption to the loads [1]. Key concepts include controllers based on local terminal quantities only, fast load tracking and the use of frequency droop methods to insure load sharing between microsources. This work was later formalized in a white paper and a US patent [2,3].

The authors are grateful for the support and technical direction provided by the Public Interest Energy Research (PIER), Energy Commission staff Bernard Treanton, and former staff Jose Palomo and Mark Rawson.

R. H. Lasseter is with the University of Wisconsin, Madison, WI 68902 USA (e-mail: lasseter@engr.wisc.edu).

J. H. Eto is with Lawrence Berkeley National Laboratory, Berkeley, CA 94720 USA (e-mail JHEto@lbl.gov).

Ben Schenkman and John Stevens are with Sandia National Laboratories, Albuquerque, NM 87185 USA. (e-mail blschen@sandia.gov)

Harry Volkommer and Dave Klapp are with American Electric Power, Dolan Technology Center, Columbus, OH 43215 USA (e-mail htvollkommer@aep.com; daklapp@aep.com)

Ed Linton and Hector Hurtado are with Northern Power Systems, Waitsfield, VT 05673, USA (e-mail elinton@northernpower.com; HHurtado@northernpower.com)

Jean Roy is with Tecogen, Inc., Waltham, MA 02451 USA (e-mail Jean.Roy@Tecogen.com)

Work was supported, in part, by the U.S. Department of Energy under Contract No. DE-AC02-05CH11231.

The objective of the CERTS Microgrid Laboratory Test Bed project was to demonstrate the ease of integrating small energy sources into a microgrid. The project accomplished this objective by developing and demonstrating three advanced techniques, collectively referred to as the CERTS Microgrid concept, that significantly reduce the level of custom field engineering needed to operate microgrids consisting of small generating sources. The techniques comprising the CERTS Microgrid concept are: 1) a method for effecting automatic and seamless transitions between grid-connected and islanded modes of operation; 2) an approach to electrical protection within the microgrid that does not depend on high fault currents; and 3) a method for microgrid control that achieves voltage and frequency stability under both grid and islanded conditions without requiring high-speed communications.

II. Microgrid Concept

CERTS Microgrid control is designed to facilitate an intelligent network of autonomous units. The concept has three critical components, the static switch, the microsources and loads [4]. The static switch has the ability to autonomously island the microgrid from disturbances such as faults, IEEE 1547 events or power quality events. After islanding, the reconnection of the microgrid is achieved autonomously after the tripping event is no longer present. Each microsource can seamlessly balance the power on the islanded microgrid using a power vs. frequency droop controller. If there is inadequate generation the frequency will droop below the normal operating range signaling the non-critical loads to shed. The coordination between sources and loads is through frequency The voltage controller at each source provides local stability. Without local voltage control, systems with high penetrations of DG could experience voltage and/or reactive power oscillations. Voltage control must also insure that there are no large circulating reactive currents between sources. This requires a voltage vs. reactive power droop controller so that, as the reactive power generated by the source becomes more capacitive, the local voltage set point is reduced. Conversely, as reactive power becomes more inductive, the voltage set point is increased.

The CERTS Microgrid has no "master" controller or source. Each source is connected in a peer-to-peer fashion with a localized control scheme implemented for each component. This arrangement increases the reliability of the system in comparison to having a master-slave or centralized control scheme. In the case of master-slave controller architecture the

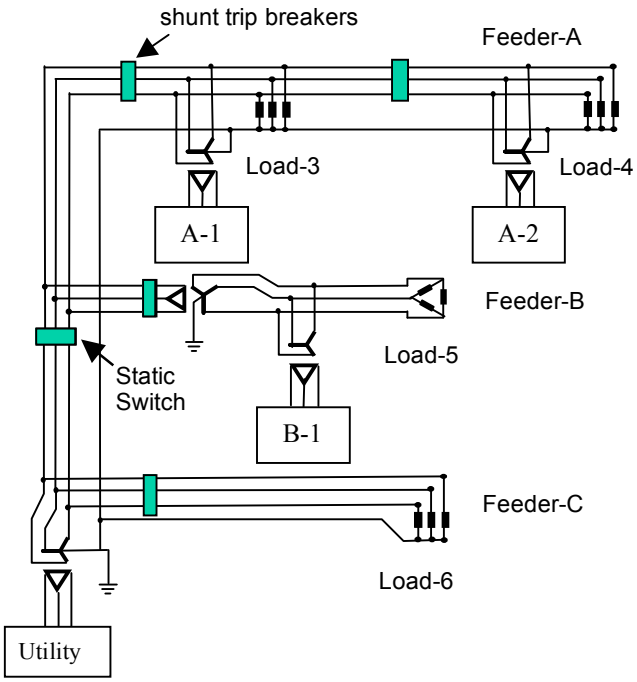

Figure 1. CERTS/AEP Microgrid Test Site

failure of the master controller could compromise the operation of the whole system. The CERTS Testbed uses a central communication system to dispatch DG set points as needed to improve overall system operation. However this communication network is not used for the dynamic operation of the microgrid. This plug and play approach allows us to expand the microgrid to meet the requirements of the site without extensive re-engineering. This implies that the microgrid can continue operating with loss of any component or generator. With one additional source, (N+1), we can insure complete functionality with the loss of any source. Plug-and-play implies that a unit can be placed at any point on the electrical system without re-engineering the controls thereby reducing the chance for engineering errors. The plug-and-play model facilitates placing generators near the heat loads thereby allowing more effective use of waste heat without complex heat distribution systems such as steam and chilled water pipes.

III. CERTS/AEP MICROGRID TEST-BED

The test bed is shown in Figure 1. There are three feeders (A, B and C) with loads and three microsources. Two microsources are on Feeder-A, (A-1 and A-2) with the third, B-1, on Feeder-B. Feeder-A uses a four-wire cable with a common ground point. The cable between A-1 and A-2 is 100yds, providing impedance to verify the plug and play feature and local stability. The second feeder (B) with a single load and source is a three-wire system with an isolation transformer.

Feeders-A and B can be islanded from the utility using a static switch. The static switch hardware consists of back-to-back thyristors with local implementation of the CERTS Microgrid islanding and re-synchronization procedures.

The four load banks, Load-3 through Load-6 can be remotely controlled from 0-90 kW and 0-45 kVar. Each load bank also has remote fault loads which range from bolted faults to high impedance faults (60 kW and 83 kW). Other loads include an induction motor 0-20 HP.

The other equipment includes: protection relays, shunt trip breakers and a complete digital acquisition system. The digital acquisition system includes twelve 7650 ION meters providing detailed voltage and current waveforms for each phase conductor, including the neutral.

Microsource

At the AEP site the prime mover is a 7.4 liter, naturally aspirated V-8, specially modified for natural gas [5]. The block and exhaust manifolds are liquid cooled. Typical coolant temperatures supplied to the host facility are in the range of 185/235 F when exhaust heat recovery is used for CHP applications. Heat is recovered from an external oil cooler as well. The fuel supply, natural gas at low pressure (18 inches of water column), is combined with air in a venturi mixer upstream of the throttle and intake manifold. To maintain the precise air/fuel ratio control required for the catalyst emissions system, a closed loop feedback control system is utilized incorporating twin oxygen sensors in the exhaust system.

The generator is liquid-cooled permanent magnet type designed specifically to match the speed and power curve of the engine. Voltage and power are proportional to RPM. The cooling fluid can be combined with the main heat recovery system in some cases where temperatures are relatively low.

Each microsource can seamlessly balance the loads when the microgrid islands using a power vs. frequency droop controller. Stability is insured using a voltage vs. reactive power droop controller to regulate AC voltage. The basic source consist of a prime mover and a power conditioning system which together provide the necessary power and voltage control required for operation of the CERTS microgrid

The power conditioning system is shown in Figure 2. There

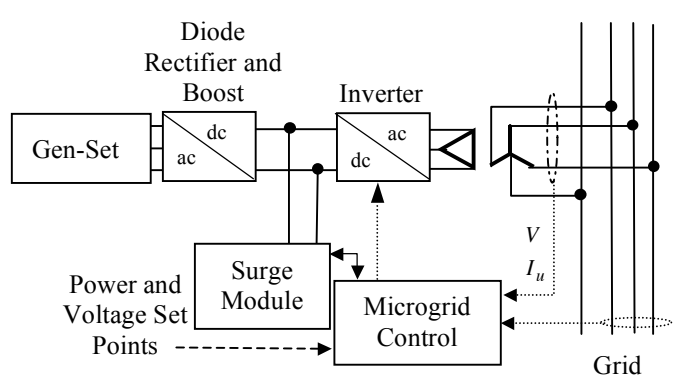

Figure 2. Power condition system

are three fundamental stages: an AC/DC diode rectifier bridge with voltage boost, DC storage and a DC/AC inverter. Diode rectifier and boost has two tasks: the first is to convert the AC waveform into a DC voltage and the second is to increase the DC voltage to a higher level so that the inverter has extra room to be able to synthesize a voltage larger than nominal. When the inverter injects reactive power to regulate voltage at the feeder, the magnitude of the voltage at the inverter can exceed 1 PU. To make sure that the inverter does not operate in the over modulation region, a larger DC bus voltage is used.

The DC storage can provide short bursts of power, drawing from an internal supply of stored energy. This insures that the inverter can provide the power required by the microgrid independent of the rate of the prime mover. Subsequent to a burst and settling to steady state, a charger ensures that the energy is slowly replenished into the batteries. The inverter is a power electronic block composed of a matrix of solid state devices with high switching frequency that can convert a DC voltage into an stiff AC voltage. For these tests storage was not used since the prime mover could provideine needed energy to the inverters.

Autonomous Controller

Integration of large numbers of microsources into a Microgrid is not possible with basic unity power factor controls. Voltage regulation is necessary for local reliability and stability. Without local voltage control, systems with high penetrations of microsources could experience voltage and/or reactive power oscillations.

Voltage control must also insure that there are no large circulating reactive currents between sources. With small errors in voltage set points, the circulating current can exceed the ratings of the microsources. This situation requires a voltage vs. reactive power droop controller so that, as the reactive power, Q, generated by the microsource become more capacitive, the local voltage set point is reduced. Conversely, as Q becomes more inductive, the voltage set point is increased, [6].

Each microsource uses a power vs. frequency droop controller to insure power balance in an islanded state. There are two possible power droop controllers. One is unit power control, which controls the power being injected by the microsource. The other is zone flow power controller which regulates the power in a feeder, for example the flow into Feeder-A in Figure 1. When regulating unit power, each source has a constant negative slope droop on the P vs. frequency plane as shown in Figure 3. In zone control each source has a positive slope on P vs. frequency plane. The fixed slope is the same magnitude used in unit power control, but with a reversed sign. When regulating unit power the relative location of loads and source is irrelevant but when regulating zone flow these factors becomes important. Power flow into the feeder is positive while power from the feeder is negative [6].

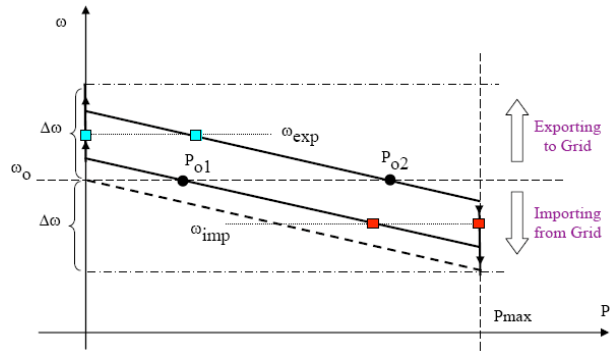

Figure 3. Steady state power vs. frequency droop

When the microgrid is connected to the grid, loads receive power both from the grid and from local microsources, depending on the customer's situation. If the grid power is lost because of IEEE 1547 events, voltage droops, faults, blackouts, etc., the Microgrid can autonomously transfer to island operation.

Figure 3 shows power vs. frequency droop for unit power control. The slope is chosen by allowing the frequency to drop by a given amount as the power spans from zero to Pmax, for the AEP test site this was 5 Hz. Figure 3 also shows the power set-points Po1 and Po2 for two units. This is the amount of power injected by each source when connected to the grid, at system frequency.

If the system transfers to island when importing from the grid, the generation needs to increase power to balance power in the island. The new operating point will be at a frequency that is lower than the nominal value. In this case both sources have increased their power output, with unit 2 reaching its maximum power point. If the system transfers to island when exporting power to the grid, then the new frequency will be higher, corresponding to a lower power output from the sources with unit 1 at its zero power point.

The characteristics shown in Figure 3 are steady state characteristics. The slope is fixed over the normal operating power range. The limits are enforced by the controller. These curves represent the locus of the steady state operation, but during dynamics the trajectory will deviate from these characteristics.

The dynamics of this droop characteristic is shown in Figure 4. The figure shows the response of two sources during an islanding event. The data is from Test 8.3 taken on 21 February 2008 at 11:45 AM at the microgrid laboratory test bed, [7]. Figure 4a traces are measured at unit A-1, see figure 1. Before islanding at time = 0.0 seconds both sources are connected to AEP. The real power output of A-1 is 5kW and reactive power (capacitive) is close to 9 kVAr. The three phase currents are from the Y side of the source are shown in the middle plot and the lower plot is voltage at the point of connection to feeder-A.

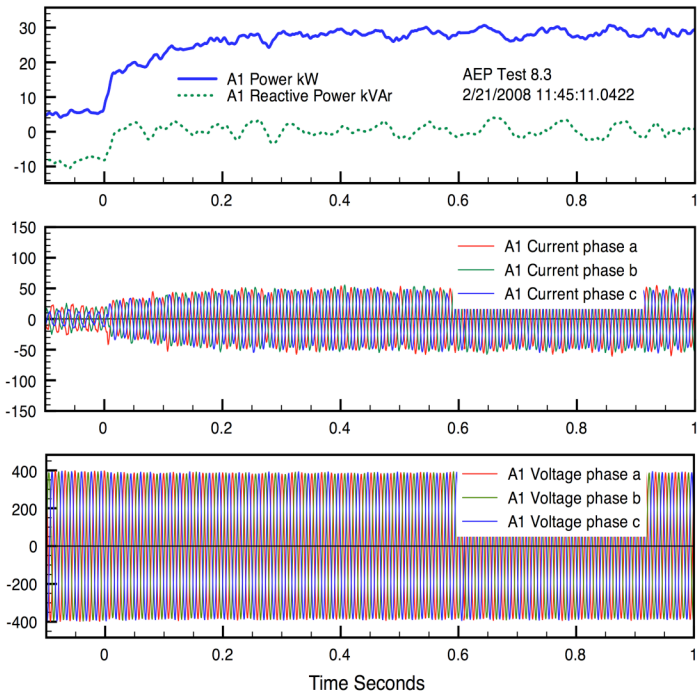

Figure 4a. Dynamic response of unit A-1

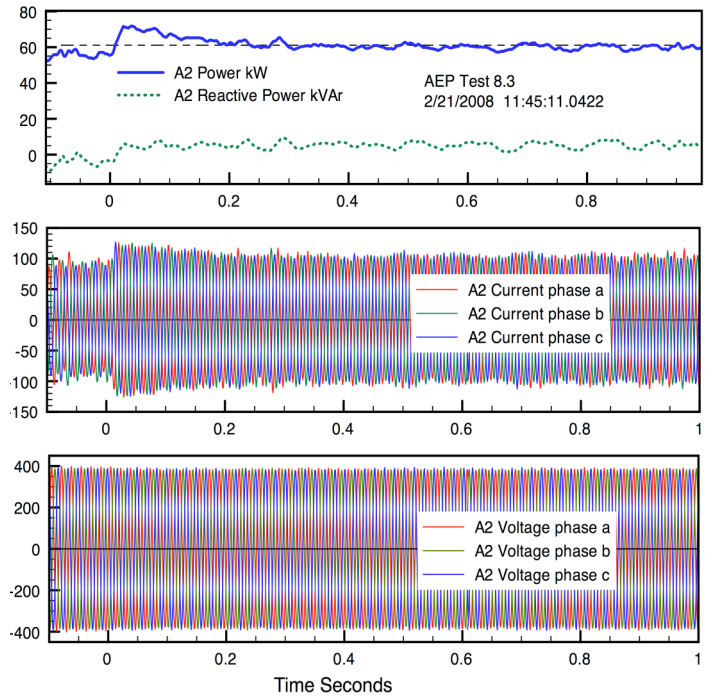

Figure 4b. Dynamic response of unit A-2

Figure 4b traces are measured at unit A-2. Before islanding the real power output of A-2 is 55kW and reactive power (capacitive) is close to 5 kVAR.

When connected to the grid the microgrid is importing 32 kW of power from the utility. After islanding the units need to compensate for lost power. A-2 overshoots its steady state maximum for less than 200 milliseconds peaking at 70 kW but then the controls backs off the generation while unit A-1 increases its output to meet its share of the loads. The new steady state operating point for A-1 is 29 kW and A-2 is 60 kW. Note that the reactive output is greatly reduced. Voltage magnitudes are unchanged for both sources demonstrating the stiffness of the inverter voltages. The current traces are from the inverters.

IV. Field Tests

Ten different classes of test were performed [7]. The first five are focused on commissioning of the test site. Tests sequence 6.0 relates to the static switch, 7.0 the protection system, 8.0 reduced system tests, 9.0 power flow control and 10.0 difficult loads [8]. In this paper focuses on the last three tests: reduced system tests, power flow control and difficult loads. These tests illustrate the performance of the sources and their autonomous controllers. This set of tests started early in 2008 resulting in hundreds of successful tests taken over a twelve-month period. Plots are labeled with test number and time the data was taken.

Reduced System Tests

Reduced system tests were designed to ensure that the microsources' autonomous controllers were working as designed. This includes unit control, zone control and mixed controls, in conjunction with limit controls and synchronized closing of the static switch. These tests were based on replicating tests that had previously been conducted during the factory acceptance testing of the inverters. The performance goal was to observe the microsources' response to different conditions. Thirteen separate tests were conducted and all performed as designed.

Test 8.1 verifies islanded microsource transitions during step load and changes in voltage set points ranging from +5% to -5%. Test 8.2 is designed to test zero power limits during islanding. Before islanding A-1 was operating at 5 kW and A-2 at 55 kW exporting 20 kW. After islanding A-1 was driven its zero power limit and A-2 autonomously reduced its output to 40 kW. Test 8.3 is designed to check the maximum power limit on A-2 during an islanding event. The results of this test are shown in Figures 4. Test 8.4 illustrates the dynamic of the microgrid to loss of load in one phase. The test is also discussed in detail in this paper with dynamic traces shown in Figure 5. Test 8.5 verifies the load tracking ability for a mixed mode control system while connected to the grid. Microsource A-1 is in zone mode controlling the power flow feeder-A, Figure 1. A-2 was in unit control and remains constant during load changes. The event is a load increase the load in Feeder-A from 70 kW to 120 kW. For this event A-1 increased its output by 50kW insuring that the feeder flow remained constant. Zone control provides an autonomous

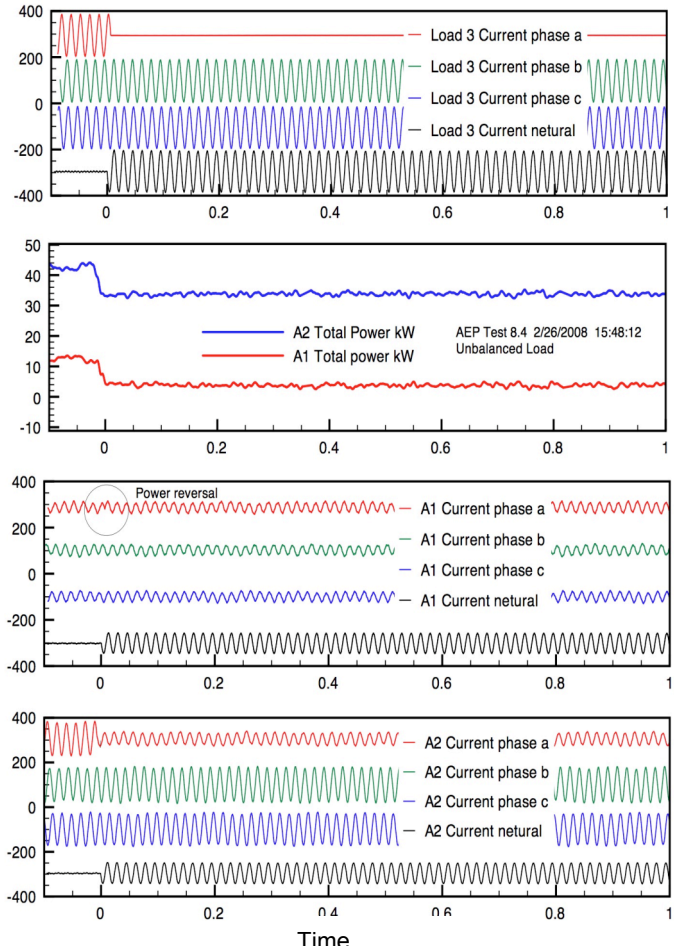

Figure 5. Response to unbalanced load

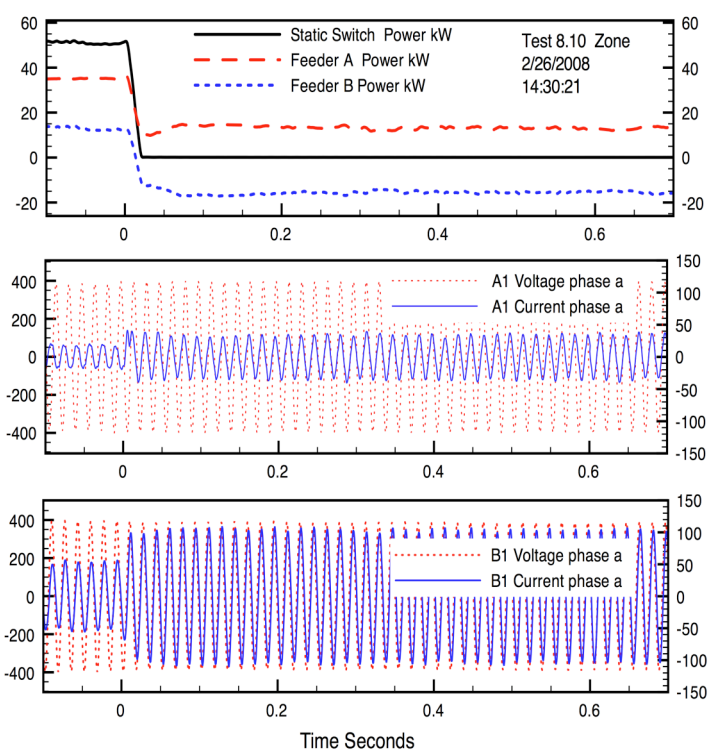

Figure 6. Islanding dynamics while in zone mode

renewable source dynamics. Test 8.6 verifies the load tracking behavior of a mixed mode control system when the zone controlled microsource reaches its limits. During a load step change A1 is driven to its maximum, which causes an automatic reset of the zone power set point. Test 8.7 is a mixed mode testing while grid connected. It is designed to test a zone power level much larger that the controlling source maximum power level. The intent was to insure the PU system in the controller was correctly normalized. Test 8.8 is the first mixed mode test of islanding. The zone is Feeder-A. In this test the zone flow goes to zero while A-1 increase is 4 kW and A-2 is 46 kW. Operation is as expected. Test 8.9 tests mixed mode islanding at maximum power limits. A-1 is in Zone operation mode and A-2 in Unit operation mode. Islanding forces both A-1 and A-2 to their maximum. The test successfully demonstrated this operation with a new steady state frequency of 59.5 Hz. If the load had been larger the frequency would continue to drop providing a signal for a load trip. Test 8.10 is an islanding test with Feeder A and B in zone control. In this test A-1 and B-1 are operating and the microgrid is importing 50 kW from the utility. After island B-1 output is increased exporting 10 kW to Feeder-A to help meet the load on this feeder. Test 8.11 is another islanding test with Feeder A and B in zone control. In this case Feeder-A is exporting 25 kW of which 10 kW flows to Feeder-C outside the static switch. Tests 8.12 and 8.13 are designed to test the black-start capacity [7]. This paper looks at three of these test in more detail; 8.3, 8.4 and 8.10. Test 8.3 was discussed in the last section.

Figure 5 is data from test 8.4. This test illustrates the dynamic of the microgrid to loss of load in phase-a. The initial system is operating in island mode with source A-1 at 43 kW and A-2 at 13 kW. Generator B-1 is off. The only load is load-3 drawing approximately 56 kW. The top plot shows the load currents in the three phases and neutral conductors. Prior to the event the phase currents are balanced with no neutral current. At time=0 phase-a load is disconnected resulting in zero current in phase-a and non-zero current in the neutral. The power response of A-1 and A-2 are shown in the second plot indicating the load is reduced by one third. A-1 is operating near 4 kW and A-2 is 34 kW. These power changes are a result of the autonomous power vs. frequency controller on each source. The line-to-line voltages at each source show no transients. The currents at A-1 and A-2 are shown in the lower two plots. Phase-a current for A-2 is reduced while A-1 current has a phase shift indicating a power flow into the transformer at the source.

Figure 6 is data from test 8.10. This test is focused on islanding while operating in a zone control mode. The zone control configuration, regulates the power flowing into feeders A and B, See Figure 1. Load changes in Feeder-A are supplied by source A-1 showing a constant feeder load. Likewise load changes in Feeder-B are supplied by source B-1. In this mode of operation, the microgrid becomes a true dispatchable load as seen from the utility, allowing for demand-side management arrangements. The initial system is

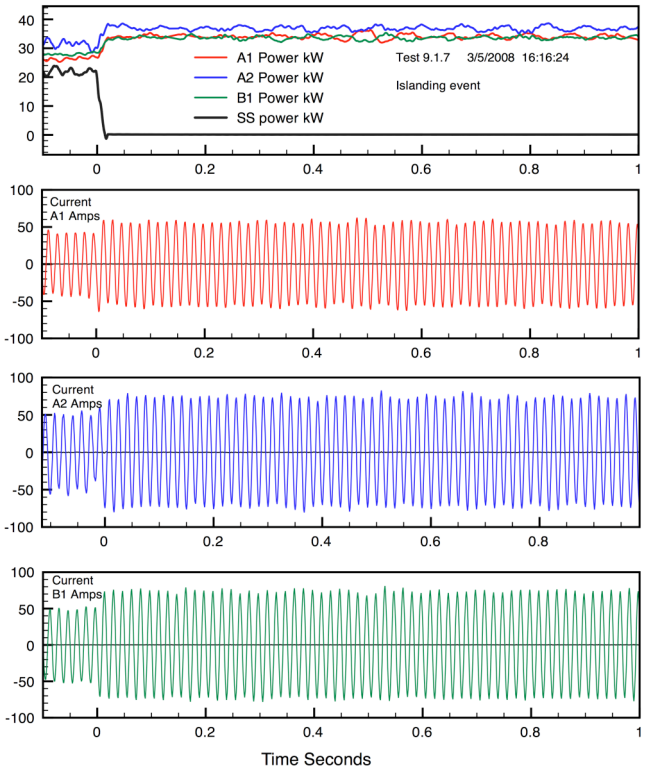

Figure 7. Response of three sources to an islanding event

operating grid connected with flow in Feeder-A set at 36 kW and Feeder-B at 14 kW. The load on Feeder-A is 36 kW implying that source A-1 is providing near zero power. Feeder-B load is 47 kW with source B-1 providing 37 kW. Generator A-2 is off. The top plot shows the real power in the static switch, Feeder-A and Feeder-B. At time equal zero the static switch opens indicated by the power through the static switch going to zero. The power flowing into Feeder-A is 15 kW which is provided by Feeder-B with a negative power flow of 15 kW. After islanding A-1 had a measured output of 21 kW and B-1 was operating at 62 kW.

The second plot shows the voltage and current related to source A-1. Recall that before opening of the static switch A-1 was not providing any real power. This plot indicates that A-1 is providing close to 60 amp of reactive current to support the voltage. The third plot shows the current and voltages for B-1. Note that the voltage at A-1 and B-1 shows no transients during loss of power from the grid.

Power Flow Control

The fourth set of tests (Section 9 of the test plan) demonstrates the flexibility of the microgrid both grid connected and islanded for different loads, power flows and impact on the utility. The tests included addition of an inductor to weaken grid. Three sets of tests were conducted [9].

Tests 9.1 to 9.3 verified and documented power flow and microgrid frequency changes when transitioning from utility connected to an islanded mode of operation. In each test, 9.1 to 9.3, a series of tests was performed that vary in the amount

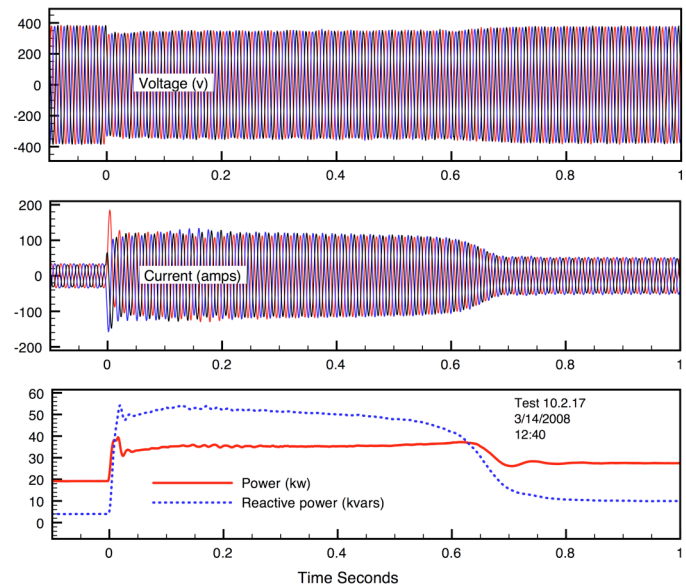

Figure 8. Response to starting of an induction machine

of load that is applied to the microgrid in a weak grid scenario along with the power settings of each microsource. The difference between tests is the control mode for each microsource. In Test 9.1, all the microsources were set for unit control mode. In test, 9.2, all the microsources are in zone control mode. Test 9.3 mixed the unit and zone control modes of the microsources during each test. All three tests, 9.1 to 9.3, went as expected demonstrating the variety of control and power flow options available through the CERTS concept.

Figure 7 is data from test 9.1.7. This test is focused on islanding with three sources operating in unit control mode, see Figure 1. All loads (3, 4 and 5) are 37kW in real power and 20 kVAR reactive power. The grid provides 22 kW with A-1, A-2 and B-1 providing the remaining 89 kW. The top plot in Figure 7 shows the power imported from the grid and the power provided by each source. The islanding event is indicated at time equal zero by the loss of grid power due to the opening of the static switch. The three other plots are each the current provided by phase-a of the three sources. The voltage at each source is similar to those shown in Figure 6. The power sharing among the three sources in response to loss of power from the grid is inherent in the CERTS concept.

Difficult Loads

The final set of testing covered in this paper explores the operation limits of the microgrid. Two primary sets of tests were conducted under weak grid conditions; the first involved induction motor starting loads under balanced and unbalanced load conditions; the second involved only unbalanced loads [10].

Figure 8 is data from test 10.2.17. This test illustrates the response of an islanded microgrid to starting of an induction motor. The initial system is operating in island mode with a single source A-1 at 20 kW. Generators A-1 and B-1 are off. The only load is load-3 drawing approximately 20 kW with a

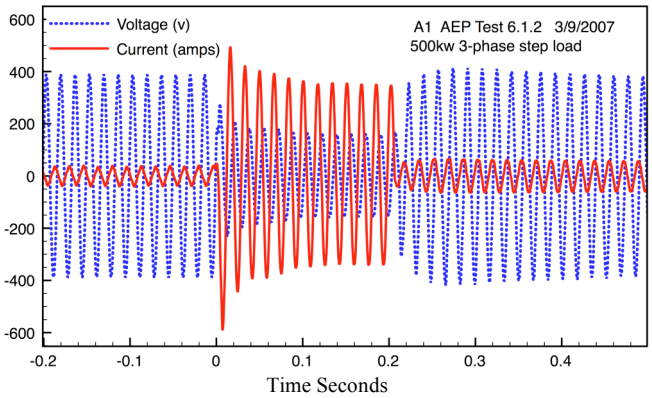

Figure 9. Response to 500 kW step load

0.9 power factor. The top two plots shows the voltages and currents at source A-1. The bottom plot contains the real and reactive powers provided by A-1 to the loads. It is clearly seen that this event draws significant reactive power from A-1 for 0.7 seconds. The voltage distortion is also significant. It is also clear that as soon as the motor was operating the islanded microgrid recovered to normal operation. This motor was started with maximum load. If this load had soft start features the impact on the microgrid would have been greatly reduced.

Another difficult load event was provided by a reverse power test, Test 6.1.2 based on IEEE 1547 (loss of utility source). In this test one source was operating with a 3 phase 500kW load on the utility side of the static switch. The event was to open the feeder from the utility which would place the full 500kW on a single source A-1. The static switch was to open in one cycle but it did not due to an error in the tripping controls of the static switch. This resulted in the 500 kW load across A-1 for 12 cycles. The traces for this event are shown in Figure 9. The solid curve is the current provided by A-1 while the dashed curve is the voltage at A-1's transformer. It is clear that the 500 kW load was imposed at time equal zero. The current shoots up to 600 amps, which is close to four times the rated current. Simultaneously the voltage is reduced approximately 50%. After 12 cycles the static switch opens and the large load is removed with the voltage returning to normal operation. This is achieved through an inter current loop which smoothly reduces the output voltage holding the output current to four per unit. This event demonstrates the robustness and stability of the microgrid design.

V. Conclusions

The objective of the CERTS Microgrid Laboratory Test Bed project was to demonstrate the ease of integrating distributed energy sources into a microgrid. This includes autonomous sources with *peer-to-peer* and *plug-and-play* functionality. The tests demonstrated stable behavior at critical operations points, the flexibility of control modes and the ability to island and re-connect to the grid in an autonomous manner. All tests performed as expected and demonstrated a high level of robustness. Continued work includes advancing CERTS Microgrid concepts to a full range of Distributed Energy Resources including renewables. At the University-of-Wisconsin's Microgrid Laboratory successful demonstration of a microgrid with synchronous generation and storage has been completed, [11, 12]. Other issues include advanced protection design, reduction of cost, meshed microgrids and frequency based load shedding.

VI. Acknowledgment

This work was funded by the Energy System Integration Division of the Public Interest Energy Research Program of the California Energy Commission under Contract No. 500-02-004, Commission Work Authorization No: MR-041

VII. References

[1] Lasseter, R. H.,"Control of Distributed Resources," Bulk Power System and Controls IV Conference, August 24-28, 1998, Santorini, Greece.

[2] Lasseter, R. H., A. Akhil, C. Marnay, J Stephens, J Dagle, R Guttromson, A. Meliopoulous, R Yinger, and J. Eto, "The CERTS Microgrid Concept," White paper for Transmission Reliability Program, Office of Power Technologies, U.S. Department of Energy, April 2002. Available: http://certs.lbl.gov/certs-der-pubs.html

[3] Lasseter, R.H., P. Piagi, "Control of small distributed energy resources," US Patent 7 116 010, Oct. 3, 2006.

[4] Lasseter, R.H., P. Piagi, "Microgrid: A Conceptual Solution," PESC'04 Aachen, Germany 20-25 June 2004

[5] Panora, R., J. Gerhrt, P. Piagi, "Design and Testing of an Inverter-Based CHP Module for Special Application in a Microgrid," IEEE PES General Meeting, 24-28 June 2007, Tampa, FL

[6] Piagi, P., R.H. Lasseter, "Autonomous Control of Microgrids," IEEE PES Meeting, Montreal, June 2006. Available:http://certs.lbl.gov/CERTS_P_DER.html

[7] Eto, Joseph, Robert Lasseter, Ben Schenkman, John Stevens, Harry Volkommer, Dave Klapp, Ed Linton, Hector Hurtado, Jean Roy, Nancy Jo Lewis, "CERTS Microgrid Laboratory Test Bed Report:Appendix K," http://certs.lbl.gov/CERTS_P_DER.html

[8] Klapp, D., H. Vollkommer, "Application of an Intelligent Static Switch to the Point of Common Coupling to Satisfy IEEE 1547 Compliance," IEEE PES General Meeting, 24-28 June 2007, Tampa, FL.

[9] Eto, Joseph, Robert Lasseter, Ben Schenkman, John Stevens, Harry Volkommer, Dave Klapp, Ed Linton, Hector Hurtado, Jean Roy, Nancy Jo Lewis, "CERTS Microgrid Laboratory Test Bed Report: Appendix L"

[10] Eto, Joseph, Robert Lasseter, Ben Schenkman, John Stevens, Harry Volkommer, Dave Klapp, Ed Linton, Hector Hurtado, Jean Roy, Nancy Jo Lewis, "CERTS Microgrid Laboratory Test Bed Report:Appendix M."

[11] Krishnamurthy, S, T. Jahns and R.H. Lasseter ,"The Operation of Diesel Genset in a CERTS Microgrid," PES 2008, Chicago.

[12] Lasseter, R.H, M. Erickson, "Microgrid Dynamics with Storage," http://certs.lbl.gov/CERTS_P_DER.html

VIII. Biographies

Robert H. Lasseter (F'1992) received the Ph.D. in Physics from the University of Pennsylvania, Philadelphia in 1971. He was a Consulting Engineer at General Electric Co. until he joined the University of Wisconsin-Madison in 1980. His research interests focus on the application of power electronics to utility systems. This work includes microgrids, FACTS controllers, use of power electronics in distribution systems and harmonic interactions in power electronic circuits. Professor Lasseter is a Life Fellow of IEEE, past chair of IEEE Working Group on Distributed Resources and IEEE distinguished lecturer in distributed resources.

Joseph H Eto (M'1987) is a staff scientist in the Environmental Energy Technologies Division of the Lawrence Berkeley National Laboratory. He has authored over 150 publications on electricity policy, electricity reliability, transmission planning, cost-allocation, demand response, distributed energy

resources, utility integrated resource planning, demand-side management, and building energy-efficiency technologies and markets. He holds an A.B. in philosophy and an M.S. in energy and resources, both from the University of California, Berkeley, and a registered professional Mechanical Engineer in the State of California.

Benjamin L. Schenkman is a graduate (BSEE and MSEE) of the New Mexico State University with an emphasis in Power Engineering. Benjamin has worked at Texas Utilities as a distribution engineer and at the Public Service Co of New Mexico as a bulk power engineer before he was brought on board as a Member of the Technical Staff at Sandia National Labs in the Energy Storage department where he has been since 2004. His current work involves microgrid control theory, battery management systems, distributed generation, and modeling renewable energies.

John Stevens (M'1981) is a graduate (BSEE and MSEE) of the University of New Mexico. John worked at Public Service Co of New Mexico and Plains Electric G&T Cooperative as a substation engineer, and for ARAMCO in Saudi Arabia before taking a job with Sandia National Laboratories and retiring in 2007. John's work at Sandia has dealt with utility interaction aspects of distributed resources, with an emphasis on photovoltaic systems. John was the chair of the working group that wrote IEEE STD 929-2000, on utility interconnection of photovoltaic systems.

Harry T. Vollkommer P.E., Electric Power Systems Consultant, retired from American Electric Power (AEP) in 2003 with over 35 years of experience involving transmission and distribution systems. Harry continues to provide consulting services to AEP, associated with testing and evaluating distributed generation and energy storage, microgrids, and solid-oxide fuel cell systems. Harry graduated in 1970 with a BSEE degree, attended the AEP Management Development Program in 1986, and in 1988 obtained an MBA Degree. Harry is a registered professional engineer in the states of Ohio and Indiana; is a member of IEEE, and was involved in industry standards development of IEEE Standard 1547-2003, IEEE Standard 400.2-2004 along with other specifications and standards in IEEE-Insulated Conductors Committee and in the Cable Engineering Committee in AEIC.

David A. Klapp has been a Project Engineer with AEP since 2004. He received a Bachelors of Science in Computer Engineering from Clarkson University (2002), and nearing completion of a Masters of Science in Electrical Engineering from the same university. While at Clarkson, David performed much of his Masters and support work within the Clarkson High Voltage Lab. This lab is privately funded through research work performed for the regional utilities. Publications include research centered on composite insulators, the CERTS Microgrid and future work dealing with detection of dielectric breakdown in power electronics driven motor systems. Finally David has worked at AEP's Dolan Technology Center on a wide range of research activities including testing and failure analysis of utility system components and development of power electronics systems for DR applications.

Ed Linton has a B.S. Electrical Engineering and a B. A. Physics, both from the University of Connecticut. He has worked at Duracell Worldwide Technology Center, Needham MA in the Test Engineering Group, at Kenetek, Woburn MA on variable-speed wind turbine controller hardware, and at US Windpower , Livermore CA and Burlington MA on 100kW wind turbine control subsystems and field test engineering. Since 1993, Ed has worked at Northern Power Systems on electrical engineering and project management for various wind hybrid system and distributed generation microgrid projects. This work has included control systems engineering, project and engineering management, engineering studies in support of proposal development, data analysis, modeling, and presentations and papers on renewable hybrid and distributed generation systems.

Hector H. Hurtado, received his B.S. and M.Eng. degrees in Electric Power Engineering from Rensselaer Polytechnic Institute in 2002 and 2003, respectively. In 2001, he worked for General Electric as an intern in the Power Systems Energy Consulting group, and was responsible for performing studies to evaluate the impact of distributed generation penetration on the voltage stability of distribution systems. In 2003, he joined Northern Power Systems as an electrical engineer, where he has been involved in distributed generation and microgrid projects, and currently performs design and testing of power converters and direct-drive permanent magnet generator technology for wind power products.

Jean Roy has a Masters degree in mechanical engineering from Northeastern University, Boston, MA 1989 and a Bachelors degree in mechanical engineering from Tufts Unitversity, Medford, MA 1984. Jean has worked with the power plant HVAC group at Stone & Webster, and with the Industrial Energy R&D group at Thermo Electron, Waltham, MA. She joined Tecogen division of Thermo Electron in 1988 and is currently the Senior Program Manager for both the chiller and cogeneration product lines of Tecogen. Her responsibilities include management of research projects, product design and development, agency certifications, technical documentation, and marketing support.