LBL-24993 Rev.

Lawrence Berkeley Laboratory
UNIVERSITY OF CALIFORNIA

Accelerator & Fusion Research Division

Presented at the 1988 Applied Superconductivity Conference,
San Francisco, CA, August 21–25, 1988

Considerations against a Force Compensated Coil

W. Hassenzahl

August 1988

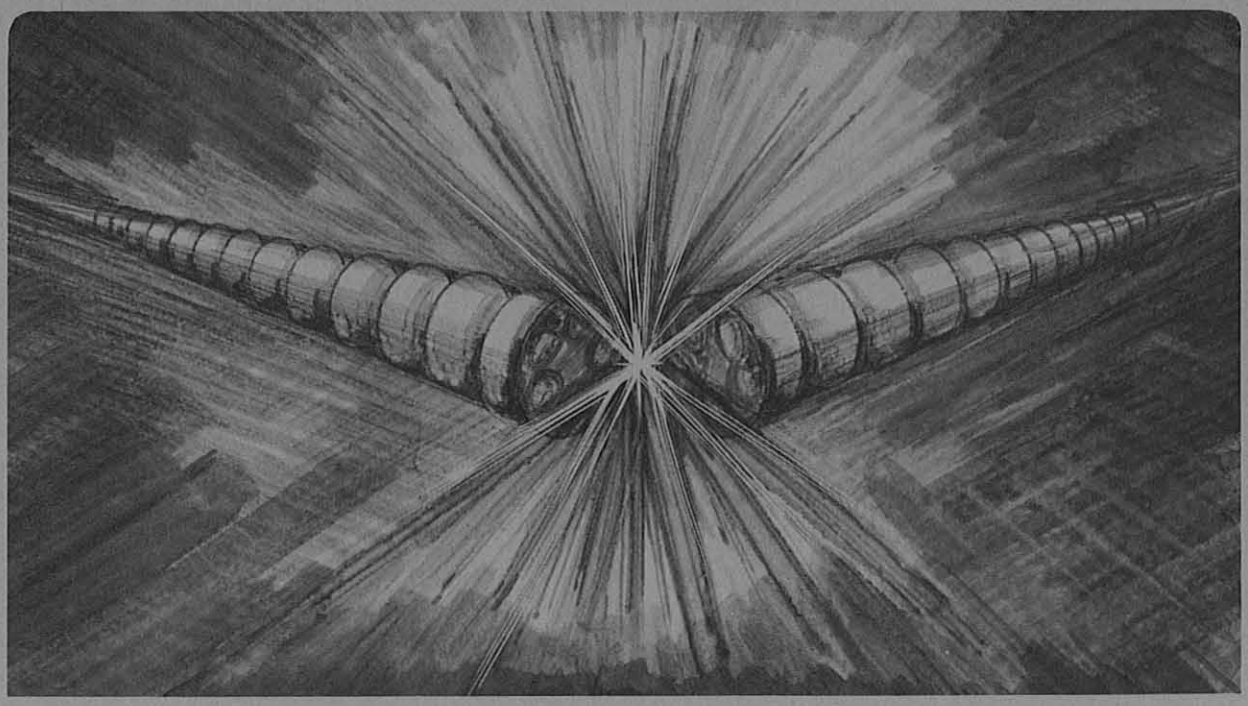

Prepared for the U.S. Department of Energy under Contract Number DE-AC03-76SF00098.

DISCLAIMER

This document was prepared as an account of work sponsored by the United States Government. Neither the United States Government nor any agency thereof, nor The Regents of the University of California, nor any of their employees, makes any warranty, express or implied, or assumes any legal liability or responsibility for the accuracy, completeness, or usefulness of any information, apparatus, product, or process disclosed, or represents that its use would not infringe privately owned rights. Reference herein to any specific commercial products process, or service by its trade name, trademark, manufacturer, or otherwise, does not necessarily constitute or imply its endorsement, recommendation, or favoring by the United States Government or any agency thereof, or The Regents of the University of California. The views and opinions of authors expressed herein do not necessarily state or reflect those of the United States Government or any agency thereof or The Regents of the University of California and shall not be used for advertising or product endorsement purposes.

Lawrence Berkeley Laboratory is an equal opportunity employer.

LBL-24993 Rev.
ASC-MAG-3

Considerations Against a Force Compensated Coil*

W. Hassenzahl

Accelerator and Fusion Research Division
Lawrence Berkeley Laboratory
1 Cyclotron Road
Berkeley, CA 94720

August 22, 1988

Presented at the 1988 Applied Superconductivity Conference, San Francisco, CA, August 21-25, 1988

***This work was supported by the Director, Office of Energy Research, Office of High Energy and Nuclear Physics, High Energy Physics Division, U.S. Dept. of Energy, under Contract No. DE-AC03-76F00098.**

LBL-24993 Rev.

Presented at the 1988 Applied Superconductivity Conference,
San Francisco, CA, August 21–25, 1988

Considerations against a Force Compensated Coil

W. Hassenzahl

August 1988

Prepared for the U.S. Department of Energy under Contract Number DE-AC03-76SF00098.

LBL-24993 Rev.
ASC-MAG-3

Considerations Against a Force Compensated Coil*

W. Hassenzahl

Accelerator and Fusion Research Division
Lawrence Berkeley Laboratory
1 Cyclotron Road
Berkeley, CA 94720

August 22, 1988

Presented at the 1988 Applied Superconductivity Conference, San Francisco, CA, August 21-25, 1988

***This work was supported by the Director, Office of Energy Research, Office of High Energy and Nuclear Physics, High Energy Physics Division, U.S. Dept. of Energy, under Contract No. DE-AC03-76F00098.**

LBL-24993 Rev.
ASC-MAG-3

CONSIDERATIONS AGAINST A FORCE COMPENSATED COIL*

W. Hassenzahl

Lawrence Berkeley Laboratory
University of California
Berkeley, CA 94720

Abstract

The cost of structural components in a large superconducting coil may well exceed the coil and cryostat cost. As a result, the idea of constructing a system composed of two different coil types assembled in such a way that the forces balance and reduce the total structural requirement is oft proposed. A suitable geometry has never been found for the fundamental reason that there can be no force compensated solution. In this paper, the general problem is presented and an analysis of the energy stored and stresses produced in the structure are described in a fundamental way. Finally, the relation between structural mass M and stored energy E, $M \geq \frac{\rho E}{\sigma_w}$, that is valid for all magnetic systems is developed, where ρ is the density of the structure and σ_w is the working stress in the structure.

Introduction

Studies of large superconducting magnet systems show that the total cost of structure, usually in hoop tension, is proportional to the stored energy.[1,2,3] For very large systems, the structure would be the largest cost component. Two paths have been proposed to reduce structure requirements. The first is to provide a means of transmitting the Lorentz forces acting on the windings to an external, warm and inexpensive support structure such as rock. This is the technique that is included in all the superconducting magnetic energy storage (SMES) proposals at present. The second is to develop two coils or coil families in which the forces cancel and thus reduce the structural requirement.

The general approach to developing this concept is to consider an infinitely long coil made up of two elements. The innermost is a conventional solenoid. The second component is an axial current on the outer surface. If a short section is evaluated, it can be shown that the local forces can be made to cancel exactly. Unfortunately, the ends of this system are the source of difficulty. Several questions are raised: how does the axial current return? What supports the compressive end force on the solenoid? Not finding easy solutions to the questions, the proposal is converted to one in which this long coil is twisted around onto itself to form a combined poloidal/toroidal system.

The device shown in Fig. 1 and proposed by Mawardi[4] for an energy storage plant is a combination of toroidal and poloidal coil systems. At first glance, this coil design appears to contradict the rather general relationship between the energy stored in a mechanical system and the required support structure. This relation is often referred to as the virial theorem.[5] The geometry of the force-compensated coil proposed is quite straight forward to conceive of, but it is complicated to calculate the forces and required current densities in detail. Without any clear proof that this particular coil configuration must also satisfy the structural mass requirement, it appeared to some as a potential contradiction to the virial theorem.

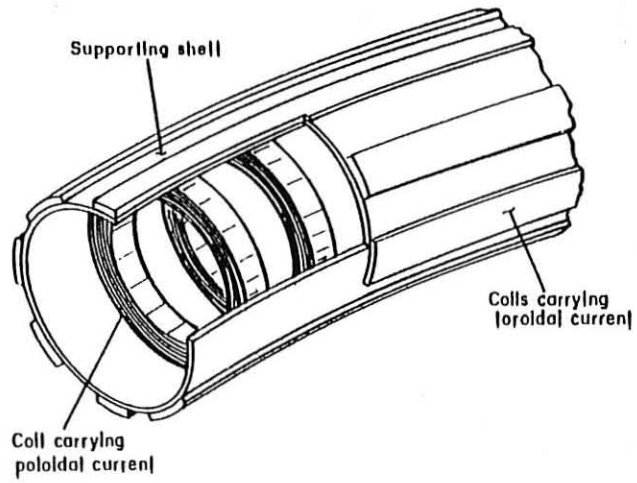

Fig. 1. Combined toroidal and poloidal coil system proposed for force compensated systems.

Three specific arguments now lead us to conclude that this coil configuration would not be effective for a SMES application. First, a detailed study[6] that attempted to find specific coil shapes that exhibited a reduction in the structural requirements was unsuccessful. Second, for a given stored energy, the amount of conductor required in this force-compensated coil is 50 to 100% greater than in proposed SMES designs.[7] Third, the virial theorem can be developed for and shown to be valid for general multiple coil systems, including the geometry proposed in which one coil is contained within another[8].

*This work was supported by the Director, Office of Energy Research, Office of High Energy and Nuclear Physics, High Energy Physics Division, U.S. Dept. of Energy, under Contract No. DE-AC03-76SF00098.

Manuscript received August 22, 1988.

Other authors have also considered the basic limitations on the relation between the energy stored in a magnetic field and the resulting structural requirements. Moon[9] discussed the validity of the virial theorem and estimated the magnitude of the inequality for various systems. Eyssa and Boom[10] used a virtual work model to arrive at a conclusion similar to that given here.

Though the fact that a force-compensated geometry might not be economically viable if found, and that none have been found might seem sufficient to discredit this approach, it is appropriate to show that there are fundamental reasons why this concept is not valid and thus eliminate it from further consideration. In the sections below, the economic issue is developed first. The quantity of conductor required in a force-compensated coil is presented to show that the configuration is too expensive for further consideration. Then, following the mathematics developed in earlier works on this subject (see refs. 4, 6, 8, and 11), it is shown that the virial theorem does apply to any coil geometry.

Cost Analysis of the Force-Compensated Coil System

As a first approximation, the volume of superconductor required in a coil is proportional to the stored energy raised to the 2/3 power. A useful comparison for different coils having the same geometry is $V_{sc}=C\ E^{2/3}\ B^{-1/3}$, where C depends only on the geometry, E is the stored energy, and B is the magnetic field strength.[3]

Two distinct coils constitute the force-compensated system. The first is toroidal and the second is poloidal. The values of the coefficients, C_t and C_p, for the toroidal and poloidal coils, respectively, are found from the relationships among the inductance, the maximum field, and the stored energy.

$$C_p = \left(\frac{16\pi^2 b^3}{\mu_o(1-b)\,(1-\sqrt{1-b^2})^2}\right)^{1/3} \qquad (1)$$

$$C_t = \left(\frac{16\pi^2}{\mu_o b(1-b)\,(\ell n\,\frac{8}{b} - 2)^2}\right)^{1/3} \qquad (2)$$

where $b = a/R$ is the ratio of the minor to major radius of the torus.

That the maximum field is approximately the same for the coils helps us estimate the effectiveness of this geometry. The results for a range of values of b are shown in Fig. 2. All conductor requirements shown are for the same total stored energy and allow a comparison of the different coils. The values indicated at the left are for other coil geometries. The solenoid with an a aspect ratio, height/diameter of 0.01 requires only 67% as much superconductor as the proposed force-compensated system, and a solenoid with an aspect ratio of 0.3 requires about 50% as much.

Because the cost of superconductor is a large portion of the total system cost, the cost of additional conductor alone makes the force-compensated design too expensive for further consideration.

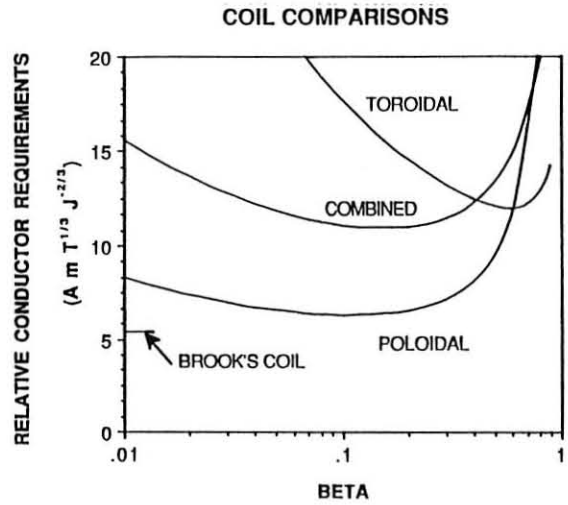

Fig. 2. Comparison of conductor requirements for different coil geometries.

The Virial Theorem for Magnetic Systems

A study of the equilibrium conditions of any mechanical system leads to a relation between the forces in the system and stresses in the supporting structure, or momentum should there be motion, is $\vec{F} = -\nabla\bar{\bar{S}}$, where F is the local body force and S is the elastic tensor. Basically, if you push on something, there will be some resistance.

One method of deriving the virial theorem is to integrate the scaler product of a position vector on each side of this relationship over all space.

$$\int \vec{x}\cdot\vec{F}\,dV = -\int \vec{x}\cdot\nabla\bar{\bar{S}}\ dV \qquad (3)$$

For a magnetic system the local force $\vec{F}$ is $\vec{J}\times\vec{B}$

$$\vec{J}\times\vec{B} = \frac{1}{\mu_o}\Delta\cdot\vec{B}\cdot\vec{B} - \frac{1}{2\mu_o}\nabla\cdot\left(\vec{B}\cdot\vec{B}\right)$$

$$= +\frac{\left(\vec{B}\cdot\vec{\nabla}\right)\vec{B}}{\mu_o}\ .$$

The left hand side of (3) is then

$$\int \vec{x} \cdot \vec{F}\, dV = \int \frac{B^2}{2\mu_o}\, dV + \int \vec{x} \left[\frac{\vec{B} \cdot \vec{B}}{\mu_o} - \frac{B^2 \bar{\bar{I}}}{2\mu_o} \right] d\vec{S} ,$$

where $\bar{\bar{I}}$ is a unit dyad, similar to a unit matrix, that preserves the vector operation. The quantity in brackets is Maxwell's stress tensor, $\bar{\bar{T}}$. The right hand side of (3) can be treated similarly

$$\int \vec{x} \cdot \nabla \bar{\bar{S}}\, dV = - \int S_{ii}\, dV - \int \vec{x} \cdot \bar{\bar{S}} \cdot d\vec{S} ,$$

where S_{ii} is the trace of the stress tensor and the negative sign indicates tension.

Because of the form of Maxwell's equations, for any single coil configuration, the surface integrals vanish. This is usually shown by evaluating them at a large distance from the origin where the fields and forces approach zero. Using this fact and combining these two expressions gives

$$\int \frac{B^2}{2\mu_o}\, dV = - \int S_{ii}\, dV$$

The left hand side of this equation is the total energy and the right hand side is the net tensile stress. The mass of support structure is related to S_{ii} and geometry. If the local working stress $\sigma(x,y,z)$ is a constant σ_w throughout, then $\int S_{ii}\, dV = \sigma_w \cdot V$ and one obtains the relation.

$$\int \frac{B^2}{2\mu_o}\, dV = E = \sigma V = \frac{\sigma M}{\rho}$$

where ρ is the density of the structural material.

If some of the material is not stressed to the level σ_w then the total mass will increase. Also, if some structure is under compression then additional structure must be in tension to compensate. Thus, the final relation $M \geq \frac{\rho E}{\sigma_w}$.

The Virial Theorem for Multiple Coil Systems

In a qualitative sense, it is evident that, at some level, the forces on the two sets of coils in Fig. 1 will be in opposition and thus there will be some cancellation. The question is "do the forces cancel to an extent that the structural requirements are reduced below the virial limit?" For the discussion below, we assume there are two coils having some generalized geometry and that the coils are in contact so that some of the forces between the coils are opposing. Following Mawardi,[5] we construct a surface S_b that completely encloses one of the coils. This surface divides space into two distinct volumes. For the volume V_i inside S_b, the relationship between the stored energy and material stress is given by

$$\int_{V_i} \frac{B^2}{2\mu_o}\, dV + \int_{S_b} \vec{x} \cdot \bar{\bar{T}}\, d\vec{S_i} =$$

$$- \int_{V_i} S_{ii}\, dV + \int_{S_b} \vec{x} \cdot \bar{\bar{S}} \cdot d\vec{S_i}$$

where the volume integral on the left describes the stored energy inside S_b. The two surface integrals relate to the forces that are transmitted across S_b. In the analysis leading to the formulas in the previous section, these surfaces were removed to a great distance where the integrals were negligible. They cannot be neglected here.

The equivalent equation for the infinite volume outside S_b is

$$\int_{V_o} \frac{B^2}{2\mu_o}\, dV + \int_{S_b} \vec{x} \cdot \bar{\bar{T}}\, d\vec{S_o} =$$

$$- \int_{V_o} S_{ii}\, dV + \int_{S_b} \vec{x} \cdot \bar{\bar{S}} \cdot d\vec{S_o}$$

Here there are additional surface integrals at large distances which have been dropped because their contribution is zero.

The surface intregals in these two equations appear to be identical. There is one important difference though, the normal surface vectors $d\vec{S} = \vec{n}\, ds$ are opposite on the different sides of the surface. Thus

$$\int_{S_b} \vec{x} \cdot \bar{\bar{T}}\, d\vec{S_o} = - \int_{S_b} \vec{x} \cdot \bar{\bar{T}}\, d\vec{S_i} .$$

Adding the two equations gives the same result as for the single coil case,

$$E = \int_V \frac{B^2}{2\mu_o}\, dV = - \int_V S_{ii}\, dV = \frac{\sigma M}{\rho}$$

where $V = V_i + V_o$.

Thus, it is possible to conclude that the virial theorem holds for any set of coils and that the apparent force cancellation cannot reduce the structural requirement.

Comments

One should take a moment to consider why this relation has been considered an extension of the virial theorem. Clausius[12] was concerned with the relation between mechanical forces and heat. He developed the virial theorem, which he called a "mechanical theorem applicable to heat" to show that relations known to apply to systems such as the relation between kinetic and potential energies for particles in planetary motion, could also be applied to a wide class of problems involving the fundamental potentials and forces that exist between particles. The term "virial" was his name for the expression $\frac{1}{2}\Sigma\vec{x}\cdot\vec{F}$, which is the equivalent of $\int\vec{x}\cdot\vec{F}\,dV$ used here.

References

1. Z.J.J. Stekly, "Magnetic Energy Storage Using Sufperconducting Coils," AVCO-Everett Research Laboratory Report AMP-102 Everett, MA (1963).

2. W.V. Hassenzahl, B.L. Baker, and W.E. Keller, "The Economics of Superconducting Magnetic Energy Storage Systems for Load Leveling: A comparison with Other Systems," Los Alamos National Laboratory Report LA-5377-MS (1973).

3. Wisconsin Superconductive Energy Storage Project, Vol. 1, University of Wisconsin Publication 1974.

4. O. K. Mawardi, "Design of a Force-Free Inductive Storage Coil," Los Alamos National Lab Report, LA-5933-MS, April 1973.

5. See for example Ref. 4 or C.L. Longmire Elementary Plasma Physics, (Wiley Interscience Publications, New York, 1963).

6. O. K. Mawardi and R. Sidley, "Force Compensated Superconducting Inductive Storage systems," a study supported by the Los Alamos National Laboratory under contract H-42-2, Final Report, April 1976.

7. W. V. Hassenzahl, "The Toroidal/Poloidal Force-Compensated Coil System," a report to EPRI under contract RP1199-16, 1983.

8. W. V. Hassenzahl, "Force-Compensated Coil Systems and the Virial Theorem," a report to EPRI under contract RP1199-16, December 1982.

9. Francis C. Moom, "The Virial Theorem and Sealing Laws for Supercondicting Magnet Systems," J. Appl. Phys. 53(12) Dec. 1982, pp. 9112-9121.

10. Y. M. Eyssa and R. W. Boom, "Considerations of a Large Free Magnetic Energy Storage System." IEEE Trans. on Magnetics Vol. MAG-17, No. 1, Jan. 1981, pp. 460-462.

11. O. K. Mawardi, "Force-Compensated Magnetic Energy Storage Systems," Case Institute of Technology report, April 1980.

12. R. Clausius, "On a Mechanical Theorem Applicable to Heat," Phil. Mag. S-4, Vol. 40, pp. 122-127, 1870.