Workshop on Accelerators for Heavy Ion Fusion

Lawrence Berkeley National Laboratory
May 23-26, 2011

Summary Report of the Workshop

EDITORS:

P.A. Seidl
Lawrence Berkeley National Laboratory

J.J. Barnard
Lawrence Livermore National Laboratory

EDITORS:

P.A. Seidl
Lawrence Berkeley National Laboratory
MS 47R0112
Berkeley, CA 94720

J.J. Barnard
Lawrence Livermore National Laboratory

Peter Seidl (LBNL), Organizing Committee (chair)
John Barnard (LLNL), Organizing Committee
Jan Hennessey, Siobhan Coen, Conference Services
Lynn Heimbucher, Assistant

The workshop was hosted by the Accelerator and Fusion Research Division of LBNL, and the Heavy Ion Fusion Sciences Virtual National Laboratory.

The workshop was sponsored by the US Department of Energy.

TABLE OF CONTENTS

PREFACE **4**

Executive summary of the Workshop on Accelerators for Heavy Ion Fusion **5**

Workshop Photograph and List of Participants **7**

WORKSHOP AGENDA **9**

Summary of the IFE-target working group **10**

The Injector Summary Report **20**

RF Accelerator Working Group Summary **25**

Summary for the Induction Linac Working Group **38**

Chamber and Chamber Driver Interface working group **43**

PREFACE

The Workshop on Accelerators for Heavy Ion Fusion was held at Lawrence Berkeley National Laboratory May 23-26, 2011. The workshop began with plenary sessions to review the state of the art in HIF, followed by parallel working groups, and concluded with a plenary session to review the results. This workshop was in the spirit of the early Heavy Ion Fusion Workshops, which included participants from many accelerator labs.

Working group chairs prepared for the workshop in advance and summarized the findings of the working groups on the final day of the workshop. Afterwards, they prepared the written reports contained herein in collaboration with the participants from their groups.

IFE targets	J. Perkins (LLNL) J. Barnard (LLNL)
Ion sources and injectors	M. Stockli (SNS)
RF accelerators	R. Garnett (LANL)
Induction accelerators	S. Nath (LANL)
Chamber and Chamber Driver interface	I. Kaganovich (PPPL) R. Moir (LLNL)

We are grateful for their contributions and, the contributions of all the participants. The whole affair went smoothly thanks to the support and organization of Siobhan Coen, Lynn Heimbucher and Jan Hennessey.

Sincerely,

Peter Seidl
John Barnard

June 14, 2011

Executive summary of the Workshop on Accelerators for Heavy Ion Fusion

May 23-26, 2011

Lawrence Berkeley National Laboratory

The National Ignition Facility has commenced its campaign of ignition experiments. These are stimulating interest in inertial fusion energy systems, including Heavy Ion Fusion (HIF). The purpose of the Workshop was to review the status of HIF research, and to identify the most promising areas of research.

We had participants from many laboratories, universities and companies: BNL, FNAL, GSI (Germany), LANL, LBNL, LLNL, ORNL, PSFC/MIT, MSU, PPPL, Univ. of Maryland, Technischen Universität Darmstadt (Germany), Utsunomiya Univ., (Japan), Fusion Power Corp., Vallecitos Molten Salt Research, and Voss Scientific.

A total of 68 participants, many from labs outside of the traditional HIF research collaborations, helped us grow the community. Plenary sessions were held on Monday May 23, and Thursday May 26. There were five working groups, which convened on May 24 and 25: IFE targets, RF approach to HIF, induction accelerator approach to HIF, chamber and driver interface, ion sources and injectors. The workshop was supported in part by the Heavy Ion Fusion Sciences Virtual National Laboratory, the DOE OFES, and DOE HEP.

International participants in the workshop expressed strong support for collaboration on heavy ion fusion research. There are opportunities for and interest in experimental collaboration on beam physics and accelerator research at LBNL, UMER, GSI, LANL, BNL, FNAL, ORNL, ITEP, KEK and elsewhere.

The unifying motivations and major challenges for further research into HIF have been noted by various high level reviews:

- Heavy ions of mass ~100 amu and ion kinetic energy ≥ 1 GeV have a stopping range suitable to drive IFE targets with yield >100 MJ and gain >50.
- A heavy-ion driver must deliver 1–10 MJ of energy, properly shaped, at a peak power ≥100 TW at ~10 Hz.
- Near the source and near the target multiple beams are desired for physics reasons. For the induction linac approach, multiple beams are desired for economic reasons. Because of the high charge per bunch, the adopted approach is to accelerate a longer bunch and then compress it to the short length required at the target.
- The beams' quality and alignment must be such that they can be focused onto the target to a radius of a few millimeters from a distance of several meters.
- Limitations due to space charge, emittance growth, beam-gas, and beam-plasma interactions must be sufficiently controlled throughout the driver.
- Nuclear and high energy physics accelerators, with total beam energy of ≥ 1 MJ have <u>separately</u> exhibited intrinsic efficiencies, pulse repetition rates (>100 Hz), power levels (TW), and durability required for HIF.

- Final focus elements can be protected from the energetic particles and X-rays produced by the fusion target.

The range of HIF target design simulations has broadened:

- A number of promising examples of HIF targets were reviewed, ranging from targets closely resembling NIF targets, to shock- and fast-ignition. All the targets deserve increased attention.
- The target work requires iteration among other elements of the power plant (e.g. chamber and accelerator).

Recent advances in accelerator science were discussed along with the potential impact on HIF. The three main types of heavy ion drivers are synchrotrons, RF and induction linacs with multiple beams. Noteworthy advances include:

- Large heavy ion accelerator facilities are operating with high availability and reliability, for example: The Large Hadron Collider (LHC, CERN), Gesellschaft für Schwerionenforschung (Germany), RIKEN Accelerator Research Facility (Japan), and the Relativistic Heavy Ion Collider (RHIC, BNL).
- Higher fields have been demonstrated in superconducting magnets. The operating range has doubled.
- Developments in control systems and diagnostics for high-intensity accelerators.
- The ability to simulate complex beam and target systems has improved dramatically. Simulation codes have been validated on a range of accelerators and basic science experiments.
- Driver scale ion sources with adequate beam parameters have been demonstrated for single beams. High charge state ions have potential advantages and should be further explored.

The chamber and chamber-driver interface is uniquely challenging for accelerator design:

- Multi-disciplinary, integrated chamber-driver interface R&D has shown encouraging results from both experiments and modeling. This effort must resume.
- Target injection has been demonstrated with surrogate plastic targets.
- There has been progress in the compatibility of the chamber design with the accelerator, for example, by reducing the solid angle subtended by the beams.
- One-sided illumination of the target would simplify the accelerator requirements.

The participants see opportunities for collaboration, and expressed interest in a follow-up workshop to address key issues in greater detail. Each working group has summarized its findings in reports.

Peter Seidl (LBNL)	Organizing Committee (chair)
John Barnard (LLNL)	IFE Targets working group chairman, Organizing Committee
Robert Garnett (LANL)	RF accelerators working group chairman
Igor Kaganovich (PPPL)	Chamber and Driver working group chairman
Joe Kwan (LBNL)	Ion sources and injector working group co-chair
Grant Logan (LBNL)	Director, Heavy Ion Fusion Sciences Virtual National Laboratory
Ralph Moir (Vallecitos Molten Salt Research)	Chamber and Driver working group chairman
Subrata Nath (LANL)	Induction Accelerators working group chairman
John Perkins (LLNL)	IFE Targets working group chairman
Martin Stockli (ORNL)	Ion sources and injector working group chairman

Workshop Photograph and List of Participants

Participants:

Dave Bailey	Lawrence Livermore National Laboratory (LLNL)
Roger Bangerter	Lawrence Berkeley National Laboratory (LBNL)
John Barnard	LLNL & LBNL
Juan Barraza	Los Alamos National Laboratory (LANL)
Yuri Batygin	LANL
Guillaume Bazouin	LBNL
Alice Beneytout	LBNL
Dick Briggs	LBNL
Alex Burke	Fusion Power Corporation
Robert Burke	Fusion Power Corporation
Martin Campos Pinto	CNRS, LBNL
Ron Cohen	LLNL
Mikhail Dorf	LLNL
Andy Faltens	LBNL
Paolo Ferracin	LBNL
Alex Friedman	LLNL & LBNL
Bob Garnett	LANL
Arno Godeke	LBNL
Steve Gourlay	LBNL
Irv Haber	University of Maryland
Chuck Helsley	Fusion Power Corporation
Hal Helsley	Fusion Power Corporation
Enrique Henestroza	LBNL
Bill Herrmannsfeldt	SLAC National Accelerator Laboratory
Darwin Ho	LLNL
Dieter Hoffmann	TU-Darmstadt
Kenneth Johnson	LANL
Igor Kaganovich	Princeton Plasma Physics Laboratory (PPPL)

Shigeo Kawata	Utsunomiya University
Rami Kishek	University of Maryland
Sergey Kurennoy	LANL
Joe Kwan	LBNL
Ed Lee	LBNL
Steve Lidia	LBNL
Bobby Liu	LBNL
Grant Logan	LBNL
Steve Lund	LLNL
Trent McCuistian	LANL
Wayne Meier	LLNL
Matthijs Mentink	LBNL
Ralph Moir	Vallecitos Molten Salt Research
Art Molvik	LBNL
Subrata Nath	LANL
Pavel Ni	LBNL
Kurt Nielsen	LANL
Masahiro Okamura	Brookhaven National Laboratory (BNL)
Brett Parker	BNL
John Perkins	LLNL
Lionel Prost	Fermi National Accelerator Laboratory
Alexi Radovinsky	PSFC/MIT
Lou Reginato	LBNL
Prabir Roy	LBNL
GianLuca Sabbi	LBNL
Tiina Salmi	LBNL
Peter Seidl	LBNL
William Sharp	LLNL & LBNL
Brad Smith	PSFC/MIT
Ian Smith	L-3 Pulse Sciences
Peter Spiller	GSI
Anton Stepanov	PPPL
Martin Stockli	ORNL
Chuck Swenson	LANL
Matt Terry	LLNL & LBNL
Jean-Luc Vay	LBNL
John Verboncoeur	Michigan State University
Will Waldron	LBNL
Xiaorong Wang	LBNL
Dale Welch	Voss Scientific

WORKSHOP AGENDA

Monday May 23, 2011

8:30am - 8:45am	"Welcome to the Workshop" - S. Gourlay (LBNL)
8:45am - 9:25am	"Motivation for heavy ion inertial fusion" - G. Logan (LBNL)
9:25am - 10:05am	"History of heavy ion fusion research" - R. Bangerter (LBNL)
10:20am - 11am	"The RF accelerator approach to HIF" - P. Spiller (GSI)
11am - 11:40am	"Single Pass HIF Driver" -- R.J. Burke (Fusion Power Corp.)
12:55pm - 1:35pm	"The induction accelerator approach to HIF" - W.M. Sharp (LLNL)
1:35pm - 2:15pm	"Inertial fusion targets and beam requirements" - J. Perkins (LLNL)
2:15pm - 2:55pm	"Reactor chamber designs and requirements" - W. Meier (LLNL)
3:10pm - 3:50pm	"Ion sources for HIF" - M. Stockli (SNS), J. Kwan (LBNL)
3:50pm - 4:30pm	"Superconducting magnets for HIF" - G. Sabbi (LBNL)
4:30pm - 5pm	"Technology for HIF Drivers and Guidance for Working Groups" - P. Seidl

Tuesday May 24, 2011

8:30am - 10:15am	Working groups (A-F)
10:30am - 11:45am	THE NATIONAL IGNITION CAMPAIGN: GOALS AND PROGRESS, J.D. Lindl (LLNL) [plenary talk, B50 AUDITORIUM]
1pm - 3pm	Working Groups (A-F)
3:30pm - 5pm	Working groups (A-F)
6:15pm - 8:15pm	Working dinner: inter-working group discussions

Wednesday May 25, 2011

8:30am - 10:15am	Working groups (A-F)
10:35am - 11:45am	Tour of NDCX-II
1pm - 3pm	Working groups (A-F)
3:30pm - 5pm	Working groups (A-F)

Thursday May 26, 2011

8:30am - 9:05am	Summary - HIF targets working group; J. Barnard (LLNL)
9:05am - 9:40am	Summary - Ion sources working group; M. Stockli (SNS)
9:40am - 10:15am	Summary - RF accelerators working group; R. Garnett (LANL)
10:30am - 11:05am	Summary - Induction accelerators; S. Nath (LANL)
11:05am - 11:40am	Summary - Chamber-driver interface working group; R. Moir (Vallecitos Molten Salt Research)
11:40am - 12:30pm	Closing comments and discussion; P. Seidl (LBNL)
12:30pm - 12:45pm	Workshop Adjourns

Summary of the IFE-target working group

John Barnard[1], John Perkins[1], Dave Bailey[1], Roger Bangerter[2], Alex Burke[3], Darwin Ho[1], Dieter Hoffmann[4], Shigeo Kawata[5], Grant Logan[1], Matt Terry[1]

[1] Lawrence Livermore National Laboratory
[2] Lawrence Berkeley National Laboratory
[3] Fusion Power Corporation
[4] Technische Universität, Darmstadt, Germany
[5] Ustunomiya University, Japan

July 31, 2011

Target design may be considered a continuum in a multi-dimensional parameter space. One classification scheme (by R. Bangerter) views any particular target as falling in a three dimensional space having three continually varying parameters: 1. degree of direct drive vs. indirect drive; 2. scale of target; and 3. the mode of ignition (whereby hot-spot ignition requires the highest value of the central adiabat just before ignition, and fast ignition requires a low central adiabat, with shock ignition somewhere in between). As one goes from indirect drive to direct drive, there is better coupling but harder alignment and beam smoothness requirements. As one increases the target scale and focal spot of the target (keeping the type of drive and mode of ignition fixed), phase space requirements are eased and there is a potential for higher gain, and lower repetition rate, but the driver energy requirement increases. As one proceeds from hot spot ignition to fast ignition, the pulse duration and spot radius goes down, increasing phase space density requirements or increasing ion energy, but the amount of compressibility also goes down, favoring more stable targets.

I. Basic description of target classes

For the purpose of the workshop and this report, we focused on four examples in the parameter space for which there has been recent work: 1. Cylindrical hohlraum indirect drive targets; 2. Spherical targets; 3. X-targets (one-sided illumination, quasi-spherical compression); and 4. Direct drive with cylindrical compression. Figure 1 summarizes these targets, summarizing features and issues. Table 1 gives some examples of parameters for these classes of targets, and Figure 2 shows possible ions and ion energies that would have a suitable range for these various targets.

1. Cylindrical hohlraum targets include "distributed radiator" targets [1], and their close relatives the "closely coupled target" [2] and the "hybrid" target [3,4]. These are perhaps the most mature of the targets, with existing integrated 2D designs, having gains ranging from 60-130 for 3-7 MJ input energy, depending on the specific design. Further, the basic ablation

physics of the capsule, and symmetry studies that can be carried over from lasers to ions will be studied on NIF. They also naturally require a two-sided geometry, with a limited range in the total cone angle of the ion beams, a feature that allows thick liquid wall protection. However, the drive efficiency (i.e. the ratio of beam energy to kinetic energy of the fuel in the capsule) is lower than direct drive schemes, because indirect drive requires the additional energy needed to heat the converter material to a temperature that can produce copious x-rays. The lower gains then translate to high required driver energies. The "distributed radiator" family of point designs of indirect drive targets, so far, require two separate ion energies for the pre pulse and the main pulse, as the target heating during the prepulse creates a plasma in the hohlraum, requiring a more penetrating ion during the main pulse to maintain a nearly uniform radiation illumination on the capsule. [1,2]. As discussed below, having dual ion energies is not a fundamental requirement of hohlraum targets, but may impose an energy penalty. Beam spot radii are in the range 2-5 mm, and the ignition pulse duration is ~10 ns.

2. For the case of spherical targets the ion beam converters are spherically distributed around the DT fuel [5 - 11]. A tamper (using high density material) can surround the capsule and increases the coupling efficiency. However, the tamper also absorbs beam energy before the ions reach the converter, offsetting some of the increased coupling efficiency. But the tamper also allows ions of higher range to illuminate the target, easing phase space requirements on the accelerator. Since the targets are layered spheres they are relatively simple to fabricate. They have high gains and many have been designed with single ion-kinetic-energies (~2-10 GeV) [5-11].

Optimum ion species and energy are still under investigation. One-dimensional designs correspond to four-pi beam illumination, not preferred for the IFE application because of chamber complexity considerations. Two-sided (polar) geometry is the goal but has yet to be established. The simulation machinery for creating polar geometry has recently been developed for laser targets and will soon be applied to ion targets. The stability of tamped spherical targets has yet to be confirmed in 3D simulations, and in general suffers from sensitivity to beam inhomogeneities and pointing errors in the focal plane. However, this may be alleviated by inclusion of radiating layers in the target construction, creating direct drive/indirect drive hybrids. Spherical targets exemplify the possible continuum between direct and indirect drive targets, as the amount of radiative smoothing can be greatly varied depending on the design. These targets, especially those closer to direct drive, are more sensitive to beam inhomogeneity and pointing accuracy than indirect drive targets with a larger case-to-capsule ratio. Another technique that can limit Rayleigh-Taylor (RT) instability is the application of so-called "wobblers" whereby the beam rapidly rotates in a circle about a central point, thus averaging the intensity variations, and lowering the total gain of the RT instability. Wobblers are being constructed and will be tested at the FAIR facility in Germany on cylindrical targets designed for high energy density physics studies, the so-called Laboratory Planetary Science targets (LAPLAS) [12]. (Some smoothing of the beam distribution will arise from inevitable natural

"wobbling" of the beam in the accelerator.) Finally, shock ignition is an option that can be applied to spherical targets, and has the potential for creating high gain options for these targets. The decreased pulse duration requires higher phase space density for the driver however. Beam spot radii are ~2 mm, and the ignition pulse duration is ~0.5 ns.

3. The X-target [13] gets its name because the outer case (a metallic tamper) can be described roughly as a surface of revolution, formed by rotating about the horizontal axis passing through the center of an X. This creates a solid target with quasi-spherical symmetry, but with two cones removed from the sphere. The case is filled with outer shells of "propellant" such as aluminum, and DT fuel interior to the propellant. The ion beams illuminate the target from one side only, deposit their energy volumetrically in the propellant or the DT, and assemble fuel with a sequence of two quasi-spherical shocks. A final short igniter pulse provides the spark to ignite the assembled DT fuel. X-targets are inherently one-sided drive and have high coupling efficiencies, reduced stability issues associated with the low compression ratio, and a potential for high yields (~GJ) and high gains. The high gains require high densities under the quasi-3D compression. The target has a high range and thus requires higher ion kinetic energies. High power and small focal spot beams (< 1mm) are needed for fast ignition. The driver concepts for these schemes are, at this point, immature. Beam spot radii are ~0.2 mm, and the ignition pulse duration is ~0.2 ns.

4. The final target class examined by our target group was direct drive with cylindrical compression. An example for this class is a design created by Russian investigators [14]. This target has also been designed as inherently one-sided illumination geometry. As direct drive targets they have high coupling efficiencies. Since they are in cylindrical geometry they would have relatively low gain, but as a fast ignition target, the gain can be high, and this compensates for the effect of geometry. As with the X-target they have high range and so can accommodate high ion kinetic energies. The fast ignition pulse requires high power, and a small focal spot, that requires high phase space density in the accelerator. The driver concept for this target is at this point immature. Beam spot radii are ~0.05 mm, and the ignition pulse duration is ~0.2 ns.

Fusion Power Corporation has adopted this type of target for its high yield heavy ion fusion power plant design. The Russian target required 7.5 MJ, and had a yield of 750 MJ (for a gain of 100). The Fusion Power Corporation goal for the cylindrical target was to increase the required pulse energy to 20 MJ, and require a gain of 500 for a 10 GJ yield.

They propose replacing the 100 GeV Pt^+ ion beam with 20 GeV Xe^+, and Sn^+ compression beams and 13 GeV Pb^+ and Bi^+ ignitor beams. The single-sided illumination for the fast ignition pulse is replaced with two-sided illumination. with the stopping distance matched to the compressed fuel in order to ignite the minimum mass defined by the rho-R criterion. Target simulations need to be carried out to validate the zero order design.

II. Specific comments on the directions for investigation for the various target classes:

Axisymmetric hohlraums: Should be investigated in more detail, because of relevance to NIF experiments (both physics and timeliness). The ion driver intensity profile was originally based on laser-based intensity profiles. Specific pulse shapes optimized for ion drivers should be explored. One sided hohlraums also could be promising.

•Hybrid: There were two issues with the hybrid target: 1. a small acceptance cone angle in the original design. The cone angle could be increased; the large spot radius may be consistent with a 20 degree bundle. 2. The design was numerically less robust than the distributed radiator.

•Distributed radiator target/close coupled target: Larger cone angle, more robust than hybrid, but also needs more scaling work. (Beyond the single parameter scaling previously carried out based on a spot radius that scaled with pulse energy but with fixed ion range.)

Tamped spherical targets: show promise for high gain and acceptable spot size. There is a research need to explore spectrum between radiation drive and direct drive. There is also an opportunity to explore possibility of shock ignition and to create polar drive versions. Stability calculations should also be carried out.

X-target: shows promise for high gain, high yield, one-sided illumination, and higher ranges. The target requires complete stability calculations (including Rayleigh Taylor and Kelvin Helmholtz) and evaluation of the precision requirements of the ignitor pulse. The high yield version of X-target may be a match to FPC requirements.

Cylindrical target: In ref [14] one sided illumination was used for the compression beam and with the other side used for the igniter. This target also was of high yield and required higher ion ranges. The stability of cylindrical targets has been studied for the upcoming LAPLAS experiment [12] at the FAIR project, but at lower compression ratios than is needed for inertial fusion energy production. The FPC adaptation of the ITEP target [14] (with ten times yield) needs simulation.

There are some issues that are common to all targets: Stability issues (to varying degrees for the various targets); Chemical issues: compatibility of mixtures, opacities of mixtures; Activation issues of high-Z material; Fabrication costs (normalized to yield); Tritium inventory for each target; Alignment tolerances and tolerances for beam intensity variations for each target; (note that spherical tolerances will be different than cylindrical tolerances); Injection issues for each target (ion targets have advantages because they are closed; capsules insulated from target environment).

III. Specific IFE Target Questions

What is a figure of merit for accelerator difficulty for different targets?

A necessary (but not sufficient) requirement that must be met by the driver is that the required phase space density at the target must be less than the achievable phase space density at the injector. This has been recognized since the earliest HIF symposia in the 70's. (See, e.g. [16]). The target requires a particular pulse energy E, supplied in a pulse duration Δt, spot radius r_{spot}, and with contstraints on the cone angle θ. The final emittance and chromatic aberrations limit (among other factors) the spot radius.

The 6D phase space density dN/dU_6 required by the target, assuming equal contributions to the spot radius from chromatic aberrations and emittance, can be expressed as (see e.g. [17]):

$$\left.\frac{dN}{dU_6}\right|_{\text{target}} = \frac{2^{3/2}\alpha_1^{1/2} d\ E}{\left[(\gamma-1)^3(\gamma+1)^2/\gamma\right] n_{beams} m^4 c^6 \theta r_{spot}^3 \Delta t}$$

Here, α_1 is a constant of the focusing system (~ 16), d is the final focal length (~ 6 m), m is the ion mass, γ is the ion relativistic factor, n_{beams} is the total number of ion beams, and c is the speed of light.

The phase space density produced at the injector (assuming space charge limited flow, breakdown limited diode voltage, a ratio of beam radius to diode gap of 1/4, and source temperature limited emittance; see [17] for details) is:

$$\left.\frac{dN}{dU_6}\right|_{injector} = \frac{\pi\varepsilon_0}{2^{1/2}9}\left(\frac{V_0}{m^3 q^3}\right)^{1/2} \frac{1}{kT_{source}(\Delta p_z/p_z)(1\ cm)^2 \alpha_{\text{B}}},$$

where $\alpha_b = (V_0/100\ \text{kV})^2$ for $V_0 < 100$ kV and $\alpha_b = (V_0/100\ \text{kV})^4$ for $V_0 > 100$ kV. Here $\Delta p_z/p_z$ is the fractional momentum spread at the injector exit, q is the charge state of the ion, kT_{source} is the ion source temperature, and V_0 is the injector diode voltage.

Note that the ratio of the target requirement to the injector phase space density is proportional to $Eq^{3/2}/([(\gamma-1)^3(\gamma+1)^2/\gamma]\theta r_{\text{spot}}^3\ \Delta t\ m^{5/2} n_{beams})$. For non-relativistic beams this ratio is proportional to $1/\beta^6$ where β is the ion velocity/c. Thus, from the phase space density point of view, constraints are eased as one goes to larger number of beams, higher ion velocity, larger spot radius, longer pulse duration, larger focusing angle, higher ion mass, and lower ion charge state. The ratio should be much less than unity to allow for inevitable phase space dilution from injector to target.

What near-term surrogate experiments can be done (e.g on NIF, OMEGA etc) to elucidate HI target physics needs?

NIF: laser-driven and heavy-ion driven indirect drive targets have the same implosion physics. Also share the coupling efficiency issues of X-ray hohlraum wall losses, hohlraum wall motion and radiation transport.

FAIR/GSI: LAPLAS (cylindrical implosions)
- X-Target (quasi-spherical implosions)/Cylindrical implosions
- Radiation converter physics

Z-machine (Sandia): X-Target (quasi-spherical implosions)/Cylindrical implosions

NIF/Omega/GEKKO: Rugby laser configurations for closely coupled
- ion analog targets
- Fuel/propellant scraping against high-Z material in a cone geometry

NDCX-II/GSI:
- Ion-coupling experiments (creating weak shocks in planar targets)
- Examine tamper shock/Bragg-peak shock generation with tamped foils
- Pulse shaping (to test flexibility of accelerator to accommodate some target designs)

How realistic is it to assume that targets with a single ion kinetic energy can be designed? What is the research required that would demonstrate it to be practical?

For cylindrical hohlraums: it appears that a single-energy-target could be designed at some energy or yield penalty. (Time dependent symmetry is the issue, as target heating changes ion range over the course of the pulse); Tamped spherical targets historically have only required a single ion energy; For tamped spherical targets with shock ignition, some study is required to see if shock ignition is consistent with a single ion energy;

For the X-target or Cylindrical target, a single ion energy for the target was chosen by design.

The hohlraum target designs and beam power profiles were derived by demanding the same temperature versus time profile in the hohlraum as were developed for laser hohlraum targets. This might have forced some beam current (vs time) features and constraints that aren't fundamental requirements (eg: the 90-TW, 6.5-ns high intensity feature that precedes the relatively long 20-TW power level at the front of the pulse for the RPD target). Can the group clarify or add to this?

The accelerator constraints were not part of the original design of the pulse shape. This is an area that would benefit by revisiting.

When should the goals of the Heavy Ion Driver Implosion Experiment (HIDIX) be specified?

The target group recommends that the specific goals of the HIDIX facility should be specified in the near term. The Integrated Research Experiment (IRE) design from Snowmass-2002 should drive HIDIX for both direct and indirect drive targets

Summary and Conclusions

We have reviewed a number of promising examples of HIF targets. The down select time is at least five years away, so no promising targets should be eliminated at this time. An important point is that heavy ion targets now cover a wider range of target design classes that may use existing heavy ion accelerator technologies. This feature provides for flexibility of HIF chamber and accelerator choices. Also, the target work requires close iteration and coordination among other elements of the power plant (e.g. chamber and accelerator). We believe all the target classes deserve increased attention.

	Features	Issues
Indirect drive – *HS ign.*	• Integrated 2D designs exist • Ablation/burn physics on NIF • Natural two-sided geometry	• Lower drive efficiency • Lower gains, high driver energies
Direct drive X-target – *Fast ign.* 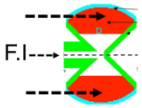	• Inherent one-sided drive • High coupling efficiencies • Reduced stability issues • Potential for high yields (~GJ) and gains	• High gains require high densities under quasi-3D compression • Higher ion kinetic energies • High power, small focal spot beams needed for fast ignition • Driver concepts immature
Direct (+indirect) drive, tamped – *Shock ign.* 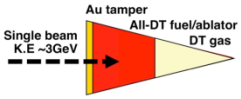	• High coupling efficiencies (tamped ablation) • Simple targets • High gains consistent with low ion-kinetic-energies (~2-10GeV)	• Optimum ion species and energy • Two-sided (polar) geometry to be established** • High power beams needed for shock ignition • Stability to be confirmed
Direct drive, cylindrical compression – *Fast ign.*	• Inherent one-sided drive • High coupling efficiencies • Simple targets	• Low gains, high driver energies • High ion kinetic energies • High power. small focal spot beams needed for fast ignition • Driver concepts immature • No U.S target design interest

**Will leverage present NIF PDD studies

7

Figure 1: The features and issues of the main classes of targets that were the focus of the working group.

	Hybrid		Distributed Radiator (RPD)		Tamped Direct Drive		X-Target		Cylind. ITEP [FPC] Target		Spherical Hohlraum	
	Foot	Main	Foot	Main	Compressor	Shock	Compressor	Ignitor	Compressor	Ignitor	Pre	Main
Energy (in pulse) (MJ)	1.7	5	2.7	4.9	2	1	1	2	7.1 [20]	0.4	1	3
Pulse duration (ns)	7	11	6.5	9.3	20	0.5	20	0.2	75 [75]	0.2	20	10
Beam radius (mm)	3.8 x 5.4	3.8 x 5.4	1.8 x 4.1	1.8 x 4.1	1.9	2.2	0.5	0.2	0.5 [0.05]	0.05	3	3
Ion range (g/cm^2)	0.031	0.049	0.034	0.042	0.038	0.038	2	2	4 [7]	4 [1]	0.15	0.15
Target acceptance angle (deg)	0 to 6	0 to 12	0 to 20	0 to 20	20 degree goal		0 to 20 degree		0 [2]	0 [2]	4 Pi	4 Pi
Illumination geometry	Two-sided		Two-sided		Two-sided		One-sided		Two-sided [Two-sided]		Spherical	
Target gain	55		68		100?		400		100 [500?]		50 - 100	
Avg. Req. Beam Power for 1 GW net electric (MW)[1]	56.0		43.8		28.4		6.6		28.4 [5.3]		63 - 28	
Rep rate for 1 GW net electric power (Hz)[1]	8.4		5.8		9.5		2.2		3.8 [0.3]		16 - 7	
(Example ion mass) (amu)	207	207	209	209	200.59	200.59	207	207	207 [130]	207 [200]	207	207
(Example ion energy) (GeV)	3	4.5	3.3	4	3.5	3.5	63	63	100 [20]	100 [13.5]	8	8
(Example charge in pulse) (mC)	0.57	1.11	0.82	1.23	0.57	0.29	0.02	0.03	0.07 [1.0]	.004 [0.07]	0.13	0.38
(Example current in pulse) (kA)	81.0	101.0	125.9	131.7	28.6	571.4	0.8	158.7	0.9 [13]	20 [37]	6.3	37.5

Table 1: Examples of target requirements for various classes of targets. Hybrid target parameters from ref. [3]; Distributed radiator (Robust Point Design) parameters from refs [2,15]; Tamped direct drive [20]; X-Target [13]; Cylind. ITEP represents cylindrical direct drive, fast ignition target parameters obtained from ref. [18, 14]. FPC parameters in brackets represent Fusion Power Corporation parameters from ref. [19]; Spherical hohlraum [21]. [1.] Assumptions on beam power requirement: Net_electric_power = 1 GW; Thermal-to-electric efficiency = 0.35; Blanket multiplier =1.1; Accelerator efficiency =0.3; Formulae used: Beam_power= Net_electric_power /(target_gain x blanket_multiplier x thermal-to-electric-efficiency - 1/accelerator-efficiency); rep rate = Average beam_power/Pulse_energy

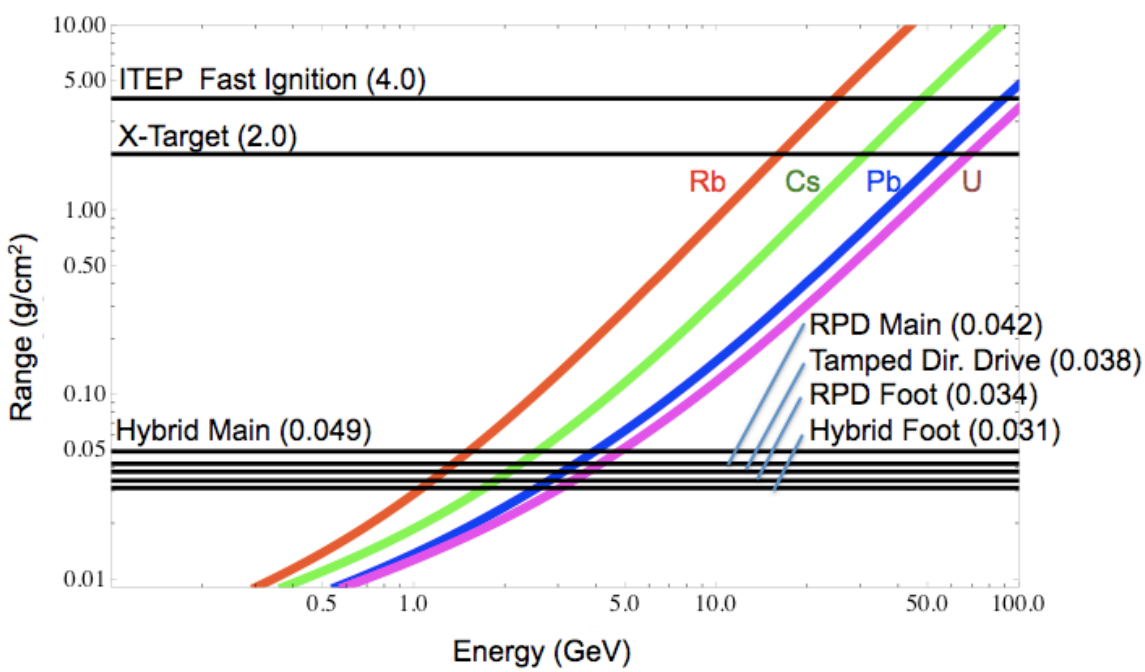

Figure 2: Range as a function of ion energy and ion mass.

References:

[1] M. Tabak and D. Callahan-Miller. "*Design of a Distributed Radiator Target for Inertial Fusion Driven from Two Sides with Heavy Ion Beams*" *Phys. Plasmas*, 5:1895, 1998.

[2] D. Callahan-Miller and M. Tabak, "Progress in target physics and design for heavy ion fusion,"*Phys. Plasmas*, 7:2083, 2000.

[3] D. Callahan, M. Herrmann, and M. Tabak, *"Progress in heavy ion target capsule and hohlraum design." Laser Part. Beams*, 20:3:405–410, 2002.

[4] D. Callahan, D. Clark, A. Koniges, M. Tabak, G. Bennett, M. Cuneo, R. Vesey, and A. Nikroo. *"Heavy-Ion Target Physics and Design in the USA," Nucl. Inst. Meth. A*, 544:9–15, 2005.

[5] D. J. Meeker and R. O. Bangerter, *"A Tamped Split-Fuel-Layer Ion-Beam Target,"* Laser Program Annual Report 1981, Lawrence Livermore National Laboratory, UCRL-50021-81, 3-15 (1982).

[6] G. O. Allshouse, R. E. Olson, D. A. Callahan-Miller, M. Tabak, Nuc. Fus. **39,** 893 (1999).

[7] T. Someya, K. Miyazawa, T. Kikuchi, S. Kawata, *"Direct-indirect mixture implosion in heavy ion fusion,"*Laser Part. Beam **24**, 359-369 (2006).

[8] B. Logan, L. Perkins, and J. Barnard. "*Direct Drive Heavy-Ion-Beam Inertial Fusion at High Coupling Efficiency*. *Phys. Plasmas*," 15:072701, 2008.

[9] N. A. Tahir and K. A. Long, *"Importance of radiation effects in ion-beam-driven inertial fusion target calculations: Compensation of range shortening by radiation transport in ion-beam-generated plasmas,"* Phys. Fluids, Vol. 29, No. 4 (1986) 1282.

[10] Tabak, M. (1988) Private communication.

[11] Basko and Meyer-ter-Vehn, *"Hohlraum target for heavy ion inertial fusion,"* Nuclear Fusion, Vol. 33, No. 4 (1993) 601.

[12] N.A. Tahir, A. Shutov, I.V. Lomonosov, A.R. Piriz, G. Wouchuk, C. Deutsch, D.H.H. Hoffmann, V.E. Fortov, *"Numerical simulations and theoretical analysis of High Energy Density experiments at the next generation of ion beam facilities at Darmstadt: The HEDgeHOB collaboration,"* High Energy Density Physics **2** (2006) 21 - 34.

[13] E. Henestroza, B.G. Logan, L. J. Perkins, *"Quasispherical fuel compression and fast ignition in a heavy-ion-driven X-target with one-sided illumination,"* Physics of Plasmas **18**, 032702, (2011). (See also http://ahif.lbl.gov/presentations/Henestroza_XTARGET_2011.pdf).

[14] M.M. Basko, M.D. Churasov, and A.G. Aksenov, *"Prospects of heavy ion fusion in cylindrical geometry," Laser and Particle Beams* **20** (2002), 411–414.

[15] S. S. Yu, W. R. Meier, R. P. Abbott, J. J. Barnard, T. Brown, D. A. Callahan, C. Debonnel, P. Heitzenroeder, J. F. Latkowski, B. G. Logan, S. J. Pemberton, P. F. Peterson, D. V. Rose, G.-L. Sabbi, W. M. Sharp, and D. R. Welch, Fusion Sci. Technol. **44**, 266 (2003).

[16] D. Judd. "*Phase space constraints on some heavy-ion inertial-fusion igniters and example designs of 1 MJ RF linac systems,"* Technical Report ANL-79-41, p. 237, Argonne National Laboratory, 1978.

[17] J. J. Barnard, "Phase-space considerations,"

http://ahif.lbl.gov/presentations/BarnardPhaseSpaceConsiderations.3.ppt

[18] B. Sharkov, G. Logan, *"Heavy Ion Fusion,"* IFSA 2007, Kobe, Presentation.

[19] A. Burke, *"The plan for direct-drive cylindrical pellets with fast ignition in the 50 GW reactor design,"* http://ahif.lbl.gov/presentations/AlexBurke_FPC_target_plan.ppt

[20] [20] L. J. Perkins et al, "*Targets for Heavy Ion Fusion Energy*," http://ahif.lbl.gov/plenary-presentations/06-110523Perkins.pptx, and L. J. Perkins, private communication (2011). See also M. Tabak, presentation at European Physical Society meeting, Hersonissos, Crete, Greece, June 12, 2008.

[21] S. Kawata et al, *"Efficient Stable Target Implosion in HIF,"*

http://ahif.lbl.gov/presentations/KawataTargetsWobbler.ppt

The Injector Summary Report

Martin Stockli[1] and Joe Kwan[2]
[1]Oak Ridge National Laboratory
[2]Lawrence Berkeley National Laboratory
July 26, 2011

Introduction

Heavy ion driven inertial fusion is a very difficult challenge, but it is not unlike all other attempts to harness the power of fusion for energy production. It actually has some advantages over other methods, especially in terms of the high efficiency and reliability of accelerators that has been achieved with high-power accelerators over the last few decades.

Heavy Ion Fusion requires ion beams with several MJ energy to compress and heat the fuel pellets to the required density and ignition temperature. For the induction linac approach, this requires heavy ion beams of ~10 ns with tens of thousands of Amps (total charge ~ 1 mC) and several GeVs at the target. This charge can be generated by combining the 0.5 to 1 amp beams from ~100 sources and longitudinally compressing the 10 to 20 μs long pulses (at the sources) after being accelerated.

Light ions are much easier to produce in large quantities, but their lower stopping power limits their useful energy range between ~10 MeV for H, ~100 MeV for Li, and a few hundred MeV for Ne. The lower kinetic energy would have to be made up by increasing the beam charge (or beam current), which becomes very unpractical. Most likely heavy ions of ~200 amu are best suited to meet such requirements. Nevertheless, lighter ions can provide opportunities to study certain aspects of the injector or driver early on during the development phase [1].

The ion beam's normalized transverse emitttance requirement is determined by the need to compress the beam diameter down to the mm-size target. Typically, this means the beam brightness at the ion source should have a current of ~ 1A and an emittance of less than 1 π·mm·mrad (for induction linacs). The goal is to have simultaneously high current and high brightness.

Inventive approaches to produce beams with lower emittance (approaching the fundamental limit given by the size and temperature of the emitted ions) allows for perhaps better emittance at the fusion target. This is not essential if the past successes for single beams can be replicated in a multi-beam geometry, but it could help target performance.

Development history and "state of the art"

An accelerator facility of unusually high reliability (as drivers for fusion power) requires ion sources that are remarkably stable and rugged. In the first HIF workshops of the late 1970's, the ion source was an immediate concern. A survey of the state of the art found that some ion sources produced currents in the microampere scale, at hundreds of kV; other ion sources demonstrated many Amperes but at only a few kV extraction voltage. The periodic table was scoured for candidate ions, and a few emerged as likely candidates: The heavy alkali ions (Cs, Rb) were good candidates because of the ease of producing a single ionization state (q=1). Mercury is another ion that is easy to produce in a unique charge state, but occurs naturally in a wide range of isotopes. Isotopic separation should be considered in cases of significant isotopic admixtures.

An example of high current beam was the ion thruster based on contact ionizer using Cs^+ [2]. It had produced beams for thousands of hours continuously, with a high total current from multiple-beamlets, but relatively low voltage. It represented – and still does – a highly developed sub-area of ion sources that overlaps with HIF in reliability and beam intensity. At the start of the HIF program many years ago, Berkeley had a Heavy Ion Linear Accelerator (HILAC) and experts on r.f. accelerator sources. The high current Xenon source [3] worked satisfactorily, producing 30 mA at 22.5 kV. It was given to BNL, and was used for a long time there. A multiple-ribbon beam array was designed [4]. The design included focusing by einzel lenses at low energy.

Today, single ion beams with the required emittance, current, and energy have been produced, suitable for injection into an induction linac [5]. The repetition rate for these sources was low due mostly because of the cost of building HV pulsers capable of the higher rep-rate, and the experiments at the time did not require it. The total operating hours was still well below the number of pulses required in a HIF driver in one year. The neutral beam injectors (for Tokamaks) can produce up to tens of Amperes of H^+ or H^- by merging multiple beamlets from a gas discharge ion source. Likewise, Xenon ion thrusters have been used on satellites [2].

The most recent HIF injector development was done for a multi-beam quadrupole array driver design. One beam of such an array is the 2 MV injector in the existing HCX experiment at LBNL using Alumino-silicate thermionic source [6]. A similar (current, emittance) beam was produced in the multi-beamlet injector Argon gas plasma source (STS-500) [7].

Ion sources for RF accelerator approach

In contrast to the induction linac approach to build a heavy ion beam driver, the RF (linac) approach will use longer pulse, lower current ion sources (because induction linac has a much lower impedance than RF linac). For example, one design is to use U^{4+} ion source [8] in a 200 MV RF linac (~ 1 km) injecting into a storage ring (of many km in circumference). The beam current at the ion source is ~ 10's mA each and pulse length > 100 μs.

In another RF accelerator scheme, accumulation of the 1 mC beam charge is done by "funneling" multiple beams (some designs have different isotopes), i.e, by stacking beam pulses in time. Here each ion source will produce 100 mA, ~ 20 μs, of singly charged ions [9]. Up to 640 ion sources will be used for producing the compression beams and another 384 ion sources for the ignition beams.

TIT had demonstrated the acceleration of two C^{2+} beams simultaneously, each 50 mA, within a single RF cavity which has two RFQ beam channels [10]. A laser ion source was used with direct plasma injection scheme (DPIS) which was invented by the BNL laser ion source group in 2006 [11].

High Charge State Ions

The ease of production and the low space charge cause singly charged ions to be the dominant charge state that is normally extracted from ion sources. Heavy ion accelerators often use a stripper foil or gas to drastically boost the ion charge state in order to boost the energy of the accelerated ions or to lower the cost of the accelerator required for the desired energy. Stripping generates distributions of charge states. A well designed stripper can limit the widths to a few charge states if the ion of interest is a highly charged ion with a full shell. However, when stripping lower-charged heavy ions at low energy, the less structured ions yield only ~10% in the dominant charge state due to the distributions covering ~20 charge states [12]. While stripping could reduce the cost of acceleration, the associated loss in intensity is prohibitive for reaching the heavy ion fusion requirements.

The MEVVA source that is currently used to produce these high charge state heavy ions is still considered unreliable with problems related to current fluctuation and high emittance [8].

There are several examples of laser ion sources. Those based on CO_2 lasers can be used to produce high charge state ions, but normally suffered from life time and instability issues. Using a YAG laser at low target intensity can produce multiple charge state ions that are not very high in the charge states and with a narrow distribution, but with adequate life time and stability. BNL is planning to install a YAG laser ion source to provide low charged state ion beams to an EBIS injector to feed heavy ion beam to RHIC and NSRL for daily operation. TIT had produced Cu^{+} and Cu^{2+} ions using laser intensity at $10^8 – 10^9$ W/cm^2 [13]. More recently BNL had observed Bi^{2+} current density of ~ 10 mA/cm^2 at 1 m of a plasma drift length. [14]. This experiment is indicating that more than 1 A of Bi^{2+} beam can be achieved by a compact table top YAG laser. More work is needed in tailoring the laser ion source design and characterizing the beam emittance in order to meet the specific requirements for HIF.

Furthermore, gas discharge ion sources with strong confinement and/or powerful plasma generators naturally output multiply charged ions with a rather narrow distribution of charge states. In some cases, the ion source can be tuned to optimized a desired charge state, thus significantly lower the cost of the accelerator without reducing the beam current available from

the source. Multiply charged ions can provide unique opportunities that need to be continued to explore.

The unwanted charge states, as well as other ion species, have to be dumped in a controlled fashion before they are accelerated to high energies and cause excessive activation of the accelerator. Even at low energy, the dumps for the unwanted beams have to be carefully designed to handle the high peak power and possible emittance growth, although the low duty factor keeps the average thermal load modest.

Future work

In developing an HIF R&D plan for the next several years, one often frames the discussion in terms of a development path that leads to a believable scientific and technical case for a large intermediate step (such as HIDIX [15]). For such an accelerator and target physics facility that is likely to cost in the range of $1B, we need R&D early on to show that at least one design for the injector for a multiple beam accelerator driver will work. Seven or nine beams might be considered a fundamental unit of an injector that would require ~100 beams. There are no fundamental showstoppers here. The merging of many ion beams, which are created from sources that are larger than the unit cell size of a multiple beam induction linac array (~0.1-0.2 m), requires dipole as well as focusing fields to match the induction linac. Another requirement would be to explore and show control of gas buildup, electron clouds, and reliability at 5-10 Hz.

In summary, there is a way forward for the HIF ion source and injector. Based on demonstrated single beam sources, future effort must demonstrate scaling up to many beams, repetition rate, and reliability. These are significant and necessary next steps, but amenable to significant progress on a 5-year timescale.

References:

[1] J.W. Kwan, "*High Current ion sources and Injectors for Induction Linacs in Heavy Ion Fusion*," IEEE Trans. On Plas. Sci., 33 (2005) 1901.

[2] J. Sovey et al., "*A Synopsis of Ion Propulsion Projects in the United States: SERT I to Deep Space I*," NASA/TM--1999-209439 (1999) http://www.scribd.com/doc/46736439/A-Synopsis-of-Ion-Propulsion-Development-Projects-in-the-US-SERT-1-to-Deep-Space-I

[3] W. Chupp et al., "*Operation of a high-current Xenon source*," PAC (1979) http://accelconf.web.cern.ch/AccelConf/p79/PDF/PAC1979_3036.PDF

[4] W.B. Herrmannsfeldt, "*A Multi-Ampere Heavy Ion Injector for Linear Induction Accelerators Using Periodic Electrostatic Focusing*," HIF Workshop 1978, Argonne National Laboratory (ANL-79-41) http://ahif.lbl.gov/selected-references/files/Herrmannsfeldt-HIF78-p273.pdf?attredirects=0&d=1

[5] A. Faltens and D. Keefe, "*Ion Induction Linacs: Reference Design and Proposed Test-Bed*," http://www.slac.stanford.edu/cgi-wrap/getdoc/hif79-016.pdf

[6] F. M. Bieniosek, et al., "*2-MV electrostatic quadrupole injector for heavy-ion fusion*," Phys. Rev. ST Accel. Beams 8, 010101 (2005). http://prst-ab.aps.org/abstract/PRSTAB/v8/i1/e010101

[7] J. W. Kwan, et al., "*Compact multibeamlet high-current injector for heavy-ion fusion drivers,"* Rev. Sci. Instruments 77, 03B503 (2006).

[8] P. Spadtke, "*U4+ Mevva source and outlook for HIF sources*," Nucl. Instrum. And Meth. A464 (2001) 388, and M. Weber, P. Beller, R. Hollinger, A. Maaser, K. Volk, H. Klein, "*Development of a Bi+ Ion Source*" in The HIDIF-Study, GSI-98-06 Report (1998) 18.

[9] J.M. Watson, J.M. Bogarty, R.J. Burke, R.L. Martin, "*A High Intensity 1.5 MegaVolt Heavy ion Preaccelerator for Ion Beam Fusion*," IEEE Trans. on Nucl. Sci. NS-26 (1979) 3098.

[10] T. Ishibashi, N. Hayashizaki and T. Hattori, Phys. Rev. ST Accel. Beams 14, 060101 (2011).

[11] M. Okamura, et al, Rev. Sci. Instrum. 77, 03B303 (2006).

[12] P. Seidl and J.L. Vay, "*Formation of high charge state heavy ion beams with intense space charge,*" Proceedings of the Particle Accelerator Conference, (PAC 11), http://www.jacow.org

[13] M. Yoshida et al, "*Development of a high-current laser ion source for induction accelerators,*" Rev. Sci. Instrum., 71, p1216, (2000).

[14] T. Kanusue, et al, presented at HIF conference in Darmstadt (2010).

[15] See G. Logan's slide # 31 http://ahif.lbl.gov/presentations/

Ion sources and Injectors Working Group Participants:

Martin Stockli	*ORNL*	*stockli@ornl.gov*
Joe Kwan	*LBNL*	*jwkwan@lbl.gov*
John Verboncoeur	*Michigan State Univ.*	*johnv@msu.edu*
Lionel Prost	*Fermi Lab*	*lprost@fnal.gov*
Masahiro Okamura	*BNL*	*okamura@bnl.gov*
Anton Stepanov	*PPPL*	*astepano@pppl.gov*
*John Staples**	*LBNL*	*JWStaples@lbl.gov*
*Jean-Luc Vay**	*LBNL*	*jlvay@lbl.gov*
*Molvik Art**	*LBNL*	*akmolvik@comcast.net*

** roaming participants*

RF Accelerator Working Group Summary

Robert Garnett (Working Group Chair)
Los Alamos National Laboratory

Working Group Participants:
Yuri Batygin, Ken Johnson, Sergey Kurennoy
Los Alamos National Laboratory
Grant Logan
Lawrence Berkeley National Laboratory
Steve Lund
Lawrence Livermore National Laboratory
Robert Burke, Hal Helsley
Fusion Power Corporation
Peter Spiller
Gesellschaft für Schwerionenforschung GmbH
Rami Kishek
University of Maryland

July 26, 2011

Introduction

Current efforts in the US on inertal fusion are focused on achieving ignition at the National Ignition Facility (NIF) at LLNL using high-power lasers and indirect-drive hohlraum targets. We note that technical activity in heavy-ion fusion started in the US in 1976 and was based on the successful application of RF-accelerator and induction accelerator [1] technology. Since then the US efforts in Heavy Ion Fusion (HIF) have focused primarily on induction linac technology while RF accelerator driven systems have been pursued primarily in Europe and Japan. The most significant RF accelerator based concept and supporting study was last completed in 1998 for the European Heavy Ion Driven Inertial Fusion (HIDIF) collaboration [2]. The goal of the study, carried out within the framework of a European study group, was to demonstrate the feasibility of an RF linac and storage ring based scheme for high-repetition rate (~10 Hz) ignition with an indirectly driven low-gain target using ballistic focusing. Not much in the way of detailed system or concept studies for RF drivers has been done since, although more recently a single-pass RF-accelerator concept eliminating the use of storage rings has been proposed by Fusion Power Corporation [3]. However, significant progress has been made in the last decade in RF accelerator technology and in the physics of intense beams (including electron cloud and ion lifetime effects) that warrants examination of past efforts and a look at new possibilities to use RF accelerators in the near-term future for energy production. Other progress of significance includes the construction of the €1 Billion FAIR Project at GSI [4] and their ongoing work to improve ion-source performance and beam brightness for high charge states, as well as the application of superconducting technology at the Michigan State University Facility for Rare Isotope Beams (FRIB) [5]. It is also noteworthy to point out that increased understanding of plasma-neutralized compression and final focusing from the ongoing program in beam-driven

Warm Dense Matter (WDM) has made it likely that future system studies for HIF will consider lower kinetic energy but high-current beams on target when exploring architecture optimization.

The charge to the working group included defining the requirements and constraints for applying RF accelerators to HIF, assessing the state of the technology in light of new developments since 2000, and exploring a specific design approach, if possible. Our discussions touched on all of these. We also discussed intermediate steps of R&D demonstrations vs. full-scale energy productions systems, new approaches vs. scaling present technology, strategies to move HIF forward, and associated funding issues. We chose to focus primarily on what is needed to produce energy while defining some enabling R&D issues that still need to be addressed.

Information and statements from the plenary talks was also used to guide our discussions:

- All target options assume multiple beams.
- Need >90% plant availability.
- Effort should be made to reduce the costs of accelerator driver systems.
- P. Spiller – HIDIF is very complicated (see Fig. 1). (There are many injectors, linacs, funneling, other beam manipulations), and the RF approach would benefit from simplifications.
- P. Spiller – The requirement of 10^{15} ions/pulse starting with a small number of beams and achieving the required macropulse at the target is very challenging.
- Desorption/beam losses are still an issue in synchrotrons/storage rings – Will this also be the case for RF linacs?
- P. Spiller – Beam loss tolerances due to activation are less restrictive for ion beams vs. protons (for ions can tolerate >>1 W/m).
- R. Burke – "Present RF linac technology can meet requirements without more relaxed target requirements."
- Driver energy in the range of 1 MJ – 7 MJ covers most target designs.
- Target design advances could influence a new baseline concept.

Target requirements were provided by John Barnard (LLNL). The target details were discussed and it was acknowledged that significant effort would be needed to look at target/driver matches. The consensus of the working group members was that we could not accomplish this in the short time available to us.

Several past studies were considered that set the context for future work. These included the 2004 HEDP Workshop RF Working Group Front-End Concept [6], the HIDIF study, the 2005 ITEP High-Energy (100-GeV U) Concept [7], and the Fusion Power Corporation Single-Pass HIF Driver Concept [8]. The Single-Pass HIF Driver Concept was discussed in considerable detail.

HIDIF/FAIR

Since significant work has been done by the HIDIF study group, it was only natural to ask one of the main participants of that effort to comment on what the perceived critical issues that

should be discussed might be. Prof. Ingo Hoffman (GSI), unable to attend the workshop, was so kind as to provide these comments:

"In most general terms, I believe the critical themes after HIDIF are listed below. Some of them actually are much clearer now, thanks to the development of FAIR (Peter Spiller's field). One needs to keep in mind that a fusion driver with its tens of megawatts of heavy ion beam power cannot easily be scaled up from proton drivers. So attention should be given to the differences.

- *Activation with low energy heavy ions: meanwhile understood much better due to the work of I. Strasik and E. Mustafin in the context of FAIR.*
- *Desorption with heavy ions: beam scrubbing effects seem to be important and helpful - Peter Spiller would know everything relevant about this.*
- *Final compression: The task was not really doable largely due to the indirectly driven target of HIDIF with its very high power requirement."*

These comments were noted and some discussion followed regarding recent results indicating that beam loss requirements for heavy ions (based on GSI/FAIR results) are much relaxed as compared to the 1 W/m requirements typically assumed for hand-on maintenance in high-power proton accelerators. These relaxed requirements improve chances for success for high-current RF ion accelerators (see Fig. 2) in the operating range required for HIF. The HIDIF results were also acknowledged as an important technical baseline. It was noted that today the initially proposed linac length could be reduced by up to 25% by using room-temperature IH structures rather than an Alvarez drift-tube linac. Present high-charge state ion source reliability and beam quality (emittance) continue to be issues (based on GSI experience). A cost for the HIDIF scheme (see Fig. 1) was never developed and therefore provides no cost baseline to compare new designs, however it may be possible to extrapolate costs from the earlier HIBALL-II study [9].

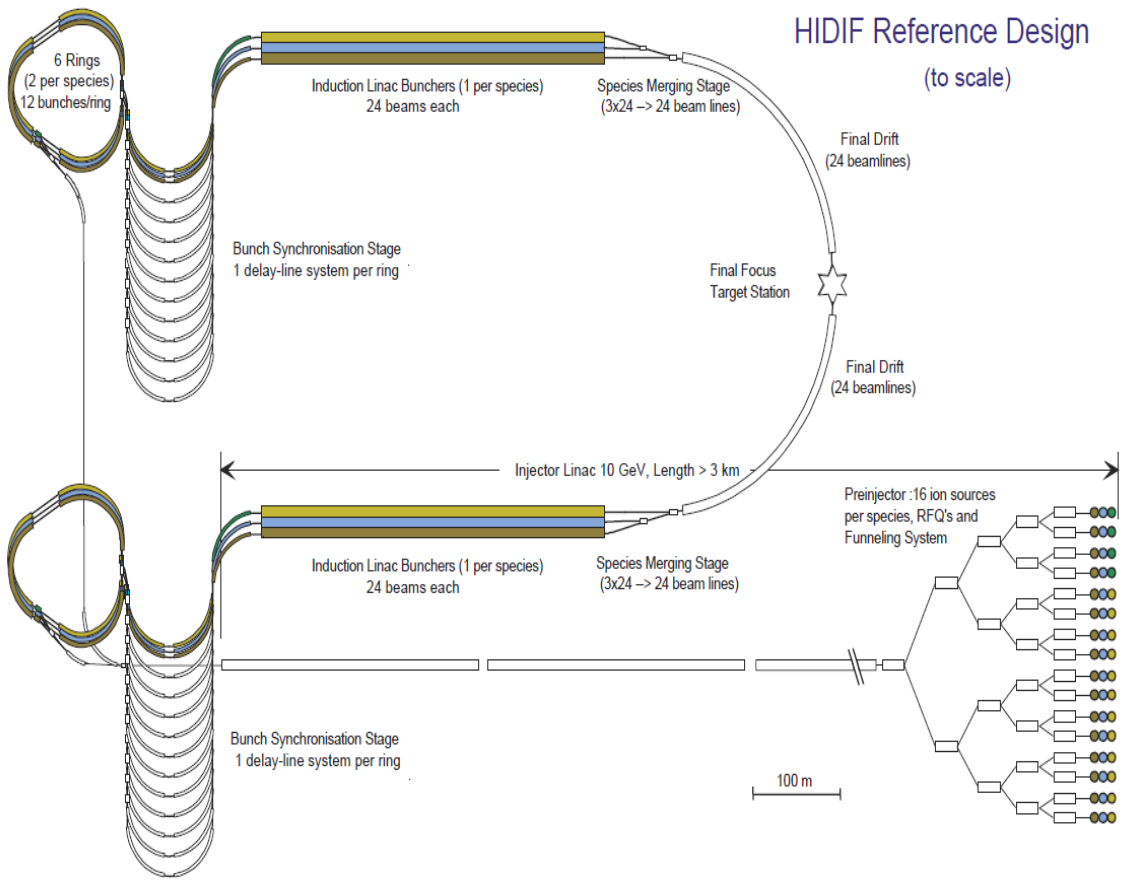

Figure 1: HIDIF Reference Design.

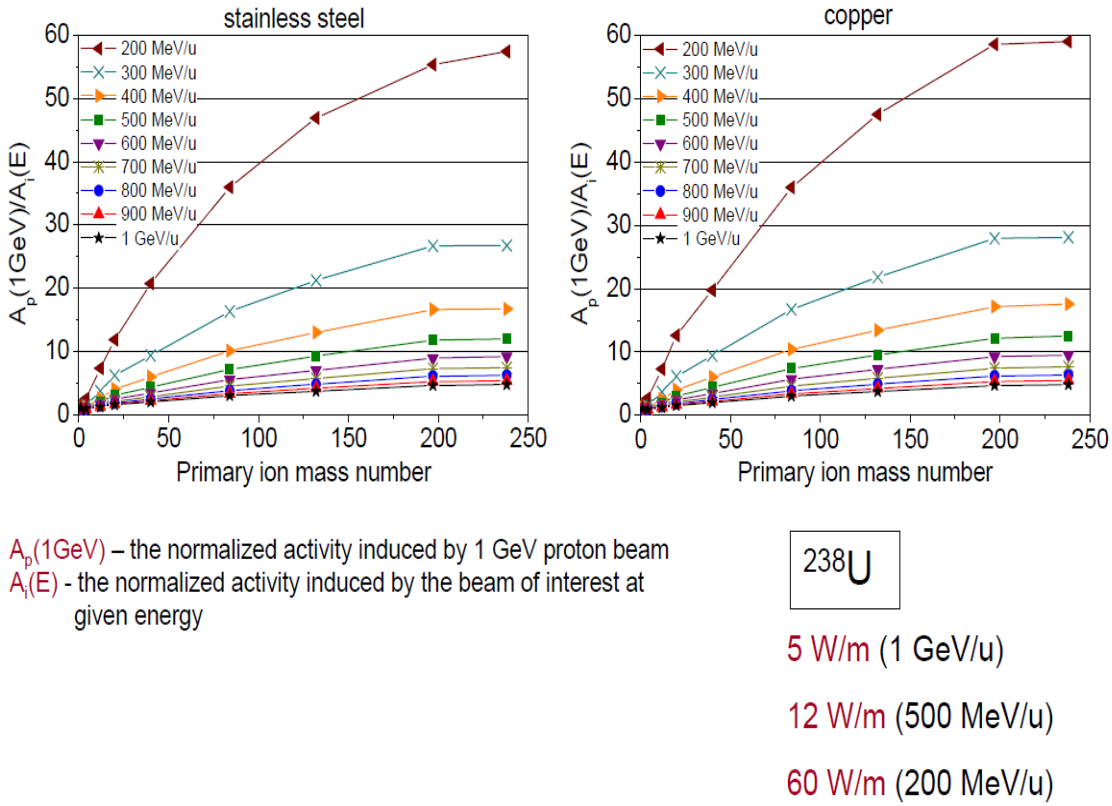

Figure 2: Activation results from the FAIR project. The activity is calculated per unit beam power, and normalized to a 1 GeV proton beam. See reference [10].

Working Group Presentations

Several short talks were presented in our working group. Highlights are presented below.

Robert Burke (Fusion Power Corporation), "Evolution of the Pulse Structure in the Single-Pass RF Driver"

Details of the pulse formats including telescoping of the multiple charge-state 1+ beams, progressive bunch and pulse combining, the differential acceleration scheme for a factor of 10 bunch compression, and final beam combining by telescoping at the target were presented for the Fusion Power Corporation Single-Pass RF Driver concept. The overall system layout was also presented. The expected transverse and longitudinal emittance budgets were discussed. The design concept is similar to HIDIF on the front end and eliminates the use of storage rings which were regarded as only marginally viable. Neutralized chamber transport is employed.

Rami Kishek (University of Maryland), "Space Charge Studies at Extreme Intensities in a Ring"

The experimental capabilities of the University of Maryland Electron Ring (UMER) were presented. UMER is a scaled experiment using high-current, low-energy electrons to better understand space charge dynamics at extreme intensities and can be used to study beam halos and mitigation techniques or phase-advance limits in FODO lattices with space charge over a

wide range of parameters. This experimental capability should be used for beam halo proof-of-principle experiments related to HIF. Space-charge limit research may lead to simpler ring-based machine designs if more charge can be controlled in storage/compressor rings.

Yuri Batygin (LANL), "Self-Consistent Beam Current Limit in RF Accelerator"

An analytical solution for the self-consistent equilibrium particle distribution of a high-brightness beam in an RF accelerator was presented. Conditions for equipartitioning of the beam distribution and transverse and longitudinal current limits were obtained. A comparison of the analytical solution with an ellipsoidal bunched-beam model was also presented. This work can lead to better estimates for space-charge current limits of bunched beams.

Steve Lund (LLNL), "Comments on Space-Charge Limits in Linacs and Rings"

The optimization of linac and ring designs to operate at the space-charge limit was discussed. Typically both are designed to operate in the known region of stability for space-charge strength (tune depression) and applied focusing strength (phase advance) (See Fig. 3). It would be a "game changer" if rings in particular could be designed to operate at or beyond the conventional space-charge limits. This could lead to significant increases in transported ring current through a prescribed injection scheme that injects beam continuously at or beyond the current limit. An important outcome of this discussion is to revisit the concept of current limits and to explore if it is possible to exceed the Laslett tune-shift limits. Classical resonance conditions may not apply due to space-charge induced tune spread washing out resonances at high space charge due to phase mixing and Landau damping.

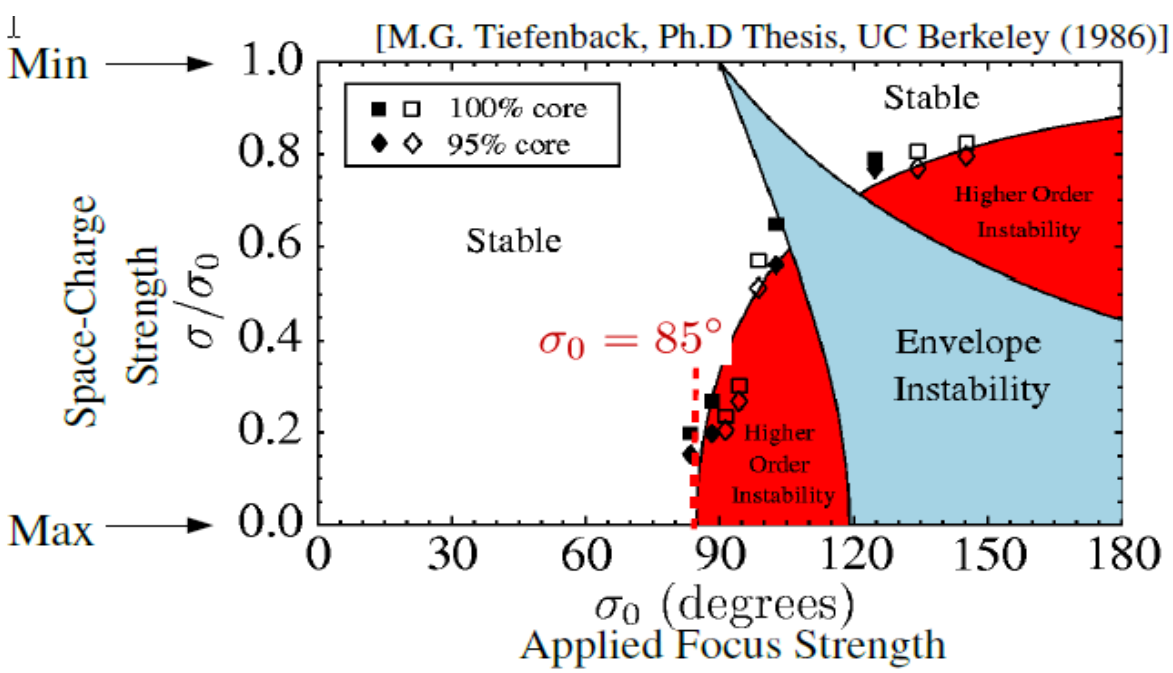

Figure 3: Tune depression vs. zero-current phase advance plot showing the region of stability in which most linacs and rings have been designed to operate.

John Staples (LBNL), "Comments on 2004 HEDP Workshop – RF WG Concept"

Design and preliminary simulation results of a 16-beam injector developed during the 2004 HEDP Workshop were discussed. Results were presented of a 1-μC, Ne^{+1} beam compressed to 1-ns pulse length, demonstrating that the de-bunched linac energy spread could be compressed a factor of 200. A beam current of 300 mA/beam was assumed (5 A total current, 200-ns pulse length) from each injector followed by a 50-MHz interdigital H-mode linac structure with multichannel solenoidal focusing.

Potential Design Concept – Extrapolating Existing Technology

A conservative example concept was discussed that addresses what is possible with modest extensions of existing technology at GSI/FAIR. This concept assumed a single-driver linac with three injectors followed by a large storage ring and multiple smaller pulse-compression rings or a compressor induction linac. The large storage ring is required to damp out the ion source/injector current fluctuations that need to be < ±10% at the final focus. Accumulation time in the storage ring would be varied based on the injector output current. The basic system parameters are given below:

- U^{4+} Injector – 1-ms pulse, ~ 20 mA (need 1mC), MEVVA-like source (x 3 for reliability)
- 100-300 MeV/u linac – single beam, similar to upgraded UNILAC, ~1-km length
- Large Storage Ring – ~10 km circumference, 1-3x10^{14} ions achievable, need 10^{15} ions for 3 MJ, ~60-μs pulse, injection time determined by linac output, goal is to damp out ion source fluctuations.
- Pulse Compression – Smaller compression rings or induction linac (or other novel schemes)
- Transport/Final Focus – neutralized, ~100 m (TBD)

This approach is attractive since it is simple in comparison to the HIDIF design and takes advantage of existing technology. Possible use of induction bunching could allow an optimized hybrid design taking advantage of RF for high-gradient acceleration in the linac and induction bunching after (or in) the ring with flexible pulse compression capabilities if phase-space dilution can be limited in the rings. However, present MEVVA ion source performance is the weak point. A 1-Hz repetition rate has been demonstrated for this source but 5 Hz-10 Hz is needed. There are also source lifetime issues (may be mitigated by using multiple ion-source injectors). Presently it is unknown how to achieve the required 10^{15} ions for 3 MJ with this concept. Since this approach uses existing technology, most R&D effort would be focused on the final focus region to address space-charge issues. Increased space charge in the rings by minimizing beam storage/accumulation/bunching time and potentially related space-charge limits beyond conventional Laslett limits could further improve the concept.

Single-Pass RF Driver (Fusion Power Corporation)

A recently-developed concept for energy production was presented and discussed in significant detail. The Fusion Power Corporation Single-Pass RF Driver (SPRFD) concept is

shown in Fig. 4. The concept assumes the use of readily available accelerator and ion-source/injector technologies and as such, is relatively conservative. Singly-charged ions are accelerated and combined progressively to deliver a 20-MJ compression pulse followed by 1-MJ ignition pulses to each end of cylindrical, direct-drive targets, in one of up to 20 chambers to increase economy of scale. The concept relies heavily on a set of novel beam manipulations (through appropriate beam merging and timing) that are conceived as a way to handle many different isotopes. It appears that sufficient redundancy exists to ensure a high level of plant availability, but a more detailed analysis, which was out of the scope of this workshop, is required to verify this conclusion.

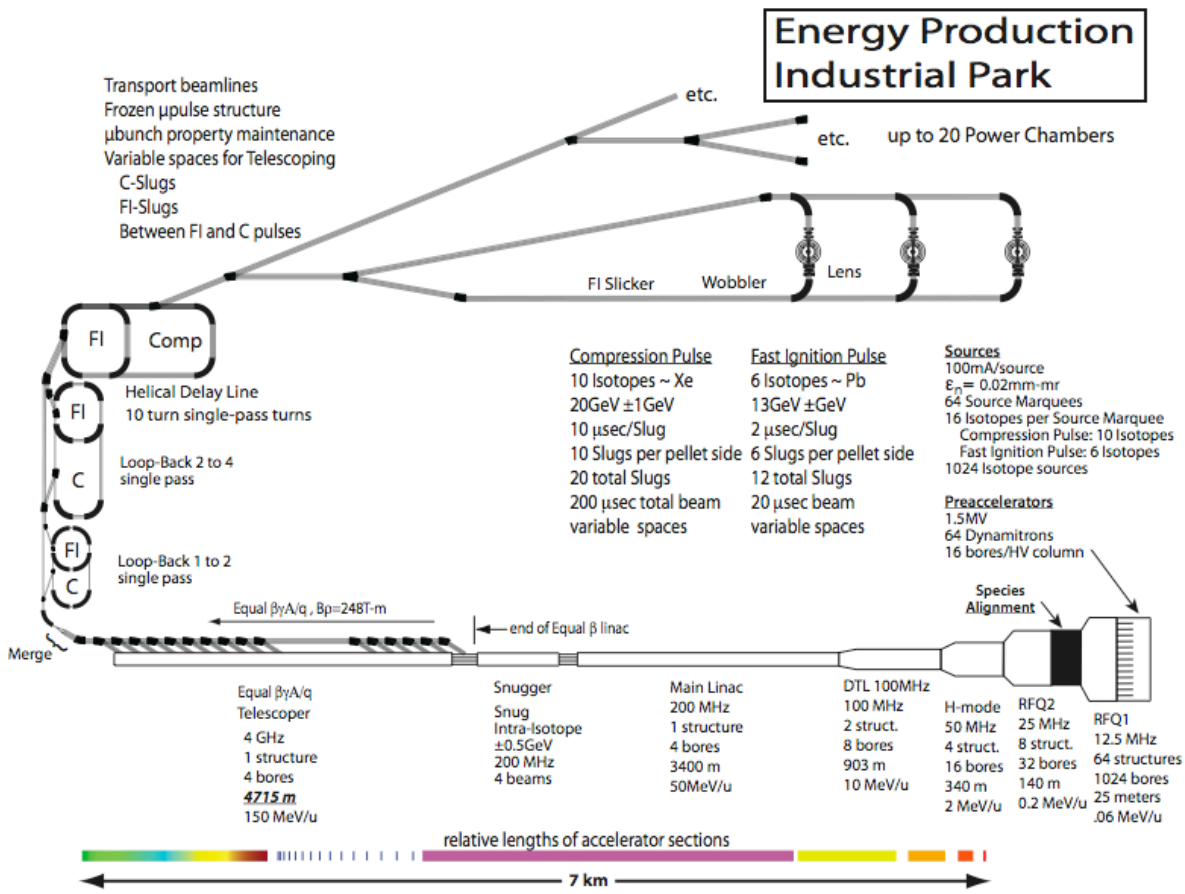

Figure 4: The Single-Pass RF Driver (SPRFD) concept.

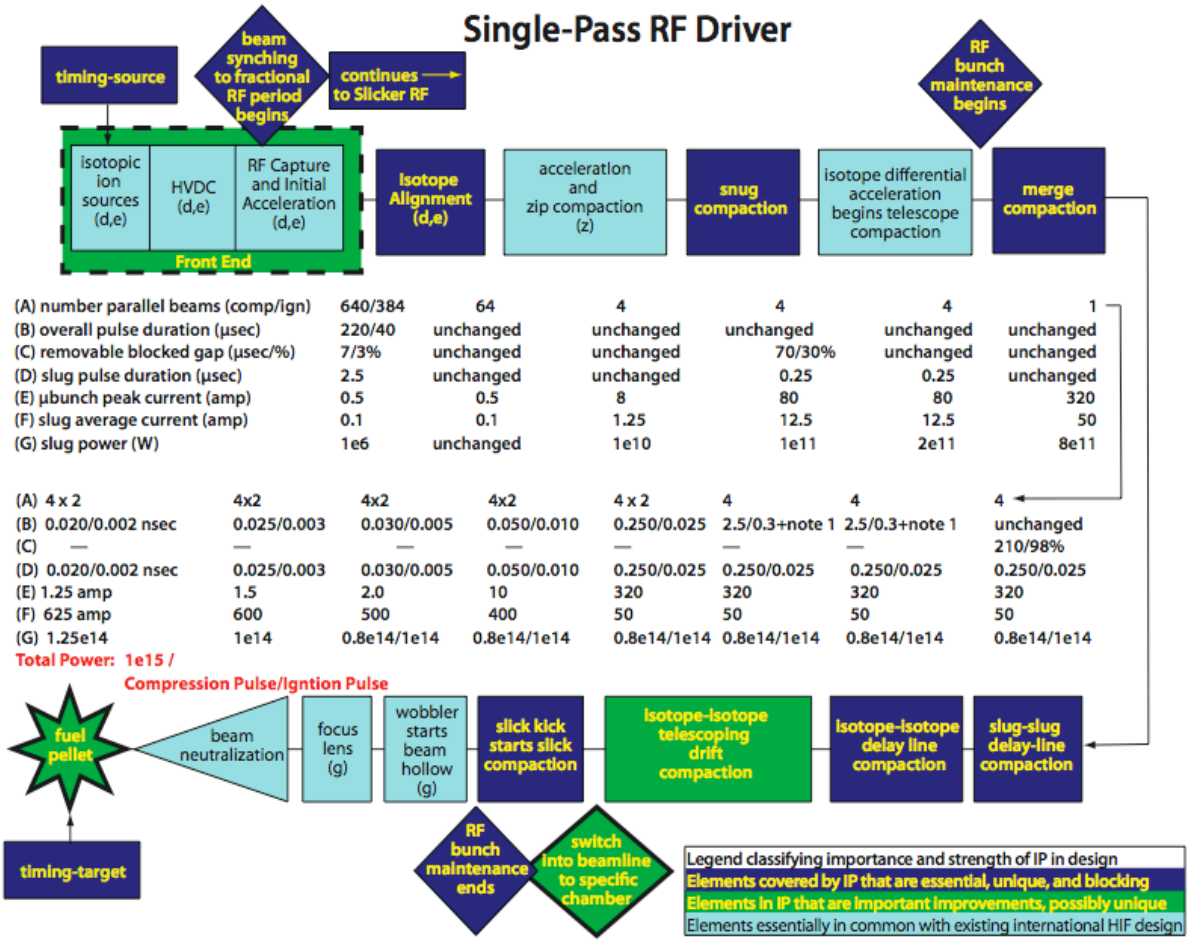

Figure 5: SPRFD subsystem details.

Much of the technical basis for this concept is grounded in the HIDIF design. However, there are several unique features including the elimination of the use of storage rings, the inclusion of the multiple target chambers, and details of beam manipulation and timing (see Fig. 5). The elimination of storage rings allows microbunch control which should preserve beam emittance and ease final focusing. The assumed 50-µm spot is estimated based on the HIDIF linac study, which included substantial growth of the emittance between the sources and the linac output.

While the concept appears to be well-developed and the proposed beam dynamics, under initial examination, are well within the experience of conventional RF accelerator systems, detailed beam dynamics simulations of either subsystems and/or an integrated end-to-end simulation would greatly enhance the technical footing of the design. This includes detailed simulations with errors. Such is common practice in accelerator system design today. Using available and well-benchmarked codes allows verification of otherwise estimated performance parameters such as emittance growth (and emittance budget), beam losses and activation, and the associated required control margins for RF, magnet, and other systems. The SPRFD concept assumes a factor of 3 emittance dilution during the beam manipulations between the linac and final focus. This will not be verifiable without substantial additional analysis.

There was significant discussion of the beam manipulations that are necessary to make the SPRFD concept work. Questions arose regarding what hardware systems would be used to perform some of these manipulations such as extracting beams of different species, merging, etc. It was not clear if these systems had been considered in detail. Technical gaps may exist and details of concept-to-implementation need to be addressed to place this concept on a firmer technical basis.

Potential Advantages of Eliminating Storage Rings

Elimination of storage rings to increase peak beam currents in an RF-based driver system in favor of a linac-only based system has the potential advantage of maintaining the microbunch structure of the beams. As a result, bunch-to-bunch space-charge interactions in the beam are negligible and minimal emittance growth is expected. The beam dynamics are dictated by the space charge of the microbunches, not the integrated charge of the pulse. Therefore, microbunch control and the subsequent preservation of the beam emittance will ease final focusing. It is recommended that a more careful analysis, supported by appropriate beam simulations, be carried out to verify these conclusions.

Pushing the Space-Charge Limits

Innovative methods should be sought to increase the driver output energy while assuming presently achievable parameters for ion source/injector beam currents. Existing simulation codes should be used to explore the potential to design and operate both linacs and rings at or beyond the typically assumed space-charge limits. Proof-of-principle experiments could also be carried out at existing facilities such as UMER.

Recent Advances

Several significant advances in accelerator technology and physics, beam transport, and HIF target design have been made in the last ten years or so that can improve the next generation of HIF driver designs. Higher-kinetic energy targets are being developed that would allow significant reductions in the required beam currents that the driver must deliver for the final compression and ignition energy. Progress has also been made in improving methods to neutralize the final beam transport to the target. This can relax the current limits of the driver beams due to space-charge effects. There have also been significant advances in understanding beam halo and electron-cloud effects, and ion lifetime issues. Being able to minimize or mitigate these effects enables designs with lower beam loss and resulting activation, and improves both driver and final focus performance.

Superconducting cavity technology (¼-wave/ ½-wave structures, IH/CH structures, spoke resonator cavities, elliptical cavities) has been applied to high-power proton linac designs (ORNL Spallation Neutron Source, accelerator production of tritium, accelerator-driven systems, etc.) and for heavy isotopes (University of Michigan FRIB). Use of this technology can reduce driver-accelerator footprints and significantly reduce overall power costs, both of which are important in realizing an efficient energy-production system. There is also promising new work

in materials applied to superconducting accelerating structures that may lead to even higher average accelerating gradients in the near future.

Significant improvements in accelerator simulation codes [11] and computational capabilities over the last decade have enabled sophisticated high-current/high-brightness designs previously not envisioned. Use of these codes has led to an improved understanding of how to design high-power linacs that minimize beam halo and losses, allow for nearly current-independent transitions that improve operation and beam tuning, and are less sensitive to fault conditions. Most of these codes have been thoroughly benchmarked and should be used to develop and verify the next generation of driver designs. Advanced simulations are also essential to understanding the limits of neutralized beam transport in compression, final focusing, and chamber transport. Exploiting these tools can promise future design concepts with lower degrees of uncertainty in machine issues and performance.

Although not yet a standard practice in accelerator system design, Reliability, Availability, Maintainability, and Inspectability (RAMI) and Failure-Mode Effects Analysis (FMEA) models have been applied to understanding the overall plant performance of many operating accelerator facilities. These models and available world-wide data must be applied to the next generation of driver designs to help ensure the required high levels of reliability and availability needed (likely > 90%) for economical energy production.

Enabling R&D

Several areas of enabling R&D were recognized as needed to refine the next-generation driver requirements. These include:

- High-current, high-charge-state injectors /ion sources capable of pure species and low emittance.
- Final transport designs that are independent of driver topology. This enables easier driver system trade-off studies.
- Better integrated target and chamber designs.
- Several new enabling proof-of-principle experiments would be useful:
  UMER – transverse beam halo formation and mitigation; study of longitudinal bunch control for final compression.
  Beam transport space-charge neutralization experiments
  GSI /FAIR wobbler experiment
  Fusion Power Corp – multi-beam multi-isotope front-end, multi-beam multi-isotope manipulations
- Well benchmarked codes made available to evaluate concepts.
- New progress in intense beam diagnostics and beam control.

Technical Issues That Can Be Addressed

A clear path forward for HIF as a means of energy production needs to be defined. Past efforts in RF driver designs have not focused on developing viable systems for energy production, but rather on basic science R&D and as such, are not optimized for the energy application. We feel confident that a next-generation driver/target system can be developed for

this purpose based on current RF accelerator technology and recent concepts. This includes exploiting recent RF and superconducting technology advances for HIF.

It is expected that all accelerator-based systems for energy production will be large power output (1 GWe or greater) systems. Large power output systems are common among the world's base-load energy suppliers. However, optimized fusion energy designs must be developed that minimize complexity to the extent possible to maximize operational reliability and performance. To do so will require extensive use of modern accelerator design and simulation codes and RAMI/FMEA data.

As target/chamber designs for energy production mature, it is expected that efficiency/gain trade-offs can be better understood. This will allow optimization of driver/target topologies including choices of appropriate accelerator technologies to maximize plant power efficiencies. Optimal driver architectures might contain aspects of both RF and induction designs. The average beam power for these systems is large (~ 20-200 MW). Accelerating structure RF source parameters can also be optimized for cost control.

Recommendations:

1. Now is the time for developing detailed conceptual designs for economical energy production that take advantage of decades of progress in accelerator physics and RF accelerator technology. An optimized design may be a combination of RF-accelerator and induction-linac technologies. A more detailed examination of the Single-Pass HIF Driver concept may be a good starting point.
2. National and international collaborations (including industry) should be encouraged to develop heavy-ion fusion energy.
3. Economy of scale issues should be studied. Conclusions could have significant impacts in defining the most viable approaches for energy production. Scale economies should increase profitability by lowering cost per kWh.
4. Development of improved high-charge state ion sources (q>1) is desirable. Higher output currents and higher brightness beams can immediately be leveraged to improve designs.
5. The beam physics of neutralization and space-charge limits should be better quantified. This will require continuing R&D efforts that include simulations and beam experiments. Efforts can be symbiotic with ongoing work in beam-driven WDM facilities such as the NDCX-II experiment at LBNL and GSI/FAIR.
6. An experimental program on heavy-ion physics including accumulation, compression, space-charge neutralization and beam-target interactions could be initiated using heavy-ion capabilities at Brookhaven National Laboratory.

References

[1] ERDA Summer Study of Heavy Ions for Inertial Fusion, Berkeley, 1976, LBL-5543 http://www.osti.gov/bridge/product.biblio.jsp?osti_id=7227551

[2] I. Hofmann and G. Plass, Editors, "The HIDIF Study," GSI-98-06 Report, August 1998.

[3] See http://www.fusionpowercorporation.com

[4] R. Bär, et al, *The New Fair Accelerator Complex At GSI: Project, Controls Challenges And First Steps* Proceedings of ICALEPCS07, Knoxville, USA (2007), http://accelconf.web.cern.ch/AccelConf/ica07/PAPERS/TOAB01.PDF

[5] FRIB reference: R.C. York, "*FRIB: A New Accelerator Facility For The Production Of And Experiments With Rare Isotope Beams,"* R.C. York PAC'09 proceedings, http://accelconf.web.cern.ch/AccelConf/PAC2009/papers/mo3gri03.pdf

[6] J. Staples, et al., "Status Report – RF Linac Group," Accelerator Driven HEDP Workshop, Lawrence Berkeley National Laboratory, Berkeley, California, October 26-29, 2004.

[7] B.Yu. Sharkov, et al., "Power plant design and accelerator technology for heavy ion inertial fusion energy," Nuclear Fusion 45 (2005) S291–S297.

[8] R. Burke, "Single-Pass, Heavy Ion Fusion, Systems and Method," U.S. Patent Application Publication, Publication No. US 2009/0310731 A1, Dec. 17, 2009.

[9] B. Badger et al., "HIBALL-II, an Improved Conceptual Heavy Ion Beam Driven Fusion Reactor Study," University of Wisconsin, Fusion Technology Institute report UWFDM-625, December 1984.

[10] I. Strašík et al., "*Beam-Loss Criteria for Heavy-Ion Accelerators and Activation of Different Materials,"* Proceedings of HB2010, Morschach, Switzerland, http://hb2010.web.psi.ch/proceedings/papers/weo1b04.pdf

[11] See for example, *Accelerator Physics Simulation Codes,* https://oraweb.cern.ch/pls/hhh/code_website.startup

Summary for the Induction Linac Working Group

S. Nath
Los Alamos National Laboratory

July 24, 2011

The plenary session of the workshop covered different system-components e.g., injector/heavy ion source, accelerator-drivers, HIF target, chamber/interface etc. The following members participated most of the time in the working group: J. Barraza (LANL), R. Bangerter (LBNL), R. Briggs (SAIC), A. Faltens (LBNL), A. Friedman (LLNL), I. Haber (UMD), W. Herrmannsfeldt (SLAC), S. Lidia (LBNL), B. T. McCuistian (LANL), A. Molvik (LLNL), K. Nielsen (LANL), A. Radovinsky (MIT), L. Reginato (LBNL), P. Roy (LBNL), P. Seidl (LBNL), B. Smith (MIT), and I. Smith (L3 Com.).

Essentially, about one and a half days were available for the working groups to meet and deliberate - deemed not enough to deliberate in detail ALL the plausible system-combinations i.e., injector/source, accelerator and target/chamber that merit discussion for their strengths and weaknesses as integrated systems. A particular component-system concept that may stand out on its own merit may not be optimally suited for the system as a whole; as such, most appropriate use of the time was deemed to pick the most plausible scenario/layout for an induction linac based system, identify typical requirements of such a system, discuss current status of the technology, and potential issues, and provide recommendations/path forward for the identified areas.

We could envision three plausible scenarios: Multi-beam linac layout, a many-accelerator modular system, and a re-circulating beam option. We chose to limit our discussion to the first scenario i.e., multi-beam linac option. In a similar vein, three target options merit looking into. As a working group for induction linacs, we discussed the induction linac layout for an indirect drive target system only.

For an indirect-drive target, typical requirements could be summarized as: ~ 5 MJ total beam energy on the target, with ~ 1 mC delivered in ~ 10 nsec; the acceleration gain of ~ 10 – 40 MeV/amu with ~ 5 GeV at the output (for 20 MeV/amu). That would need ~ 100 beamlets (individual beams). At ~ 10 Hz duty an efficiency of about 20% or more is desirable. An acceptable beam quality would be ~ mm-scale focus on the target. Similar target and driver parameters may be found in refs. [1-3].

In a multiple-beam induction linac concept, the <u>total</u> beam current (a few to 10 kA over much of the accelerator) is made up of individual beams transported in parallel channels through a common set of "induction" modules. A typical section of a transverse focusing period of the FODO lattice is shown in figure 1, which depicts a superconducting magnet assembly at the entrance, one or more induction modules and acceleration gaps, followed by a defocusing quadrupole unit. The pattern is repeated to form a FODO accelerating lattice constituting the

entire linac. The composite magnetic field-lines in the quadrupole magnets are arranged so as to provide high quality fields encompassing each of the individual beams. Each particle-beam carries about 1 Amp near the injector, and increases in current to ~50 Amp/beam at the end of the accelerator. Several insulator configuration options are possible and optimization studies need to be done for cost and acceleration efficiency of specific geometries.

The projected vacuum needs, 10^{-8} Torr at the front end gradually relaxing to 10^{-7} Torr, is considered achievable; this specification needs to be confirmed – it depends on the allowable accelerator component activation, beam loss, and relevant atomic cross sections. Alignment requirement is an issue intimately tied to the choice of the target. Constraints resulting from error analysis that fold in component errors coupled with the requirements of the specific target would determine if the state of the art alignment techniques would suffice or more innovative mitigation approach e.g., active steering is needed.

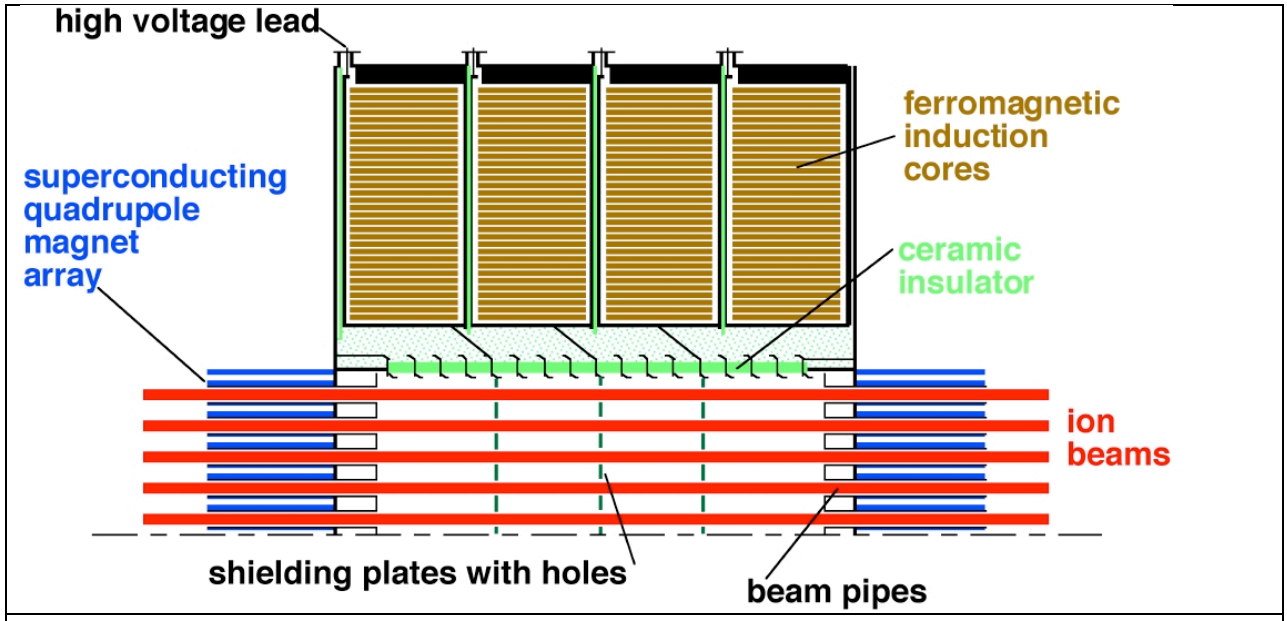

Figure 1: An induction module bracketed by quadrupole magnets at the front- and exit-end forming half of a FODO lattice period of the induction linac.

Power-feed to the accelerating modules is an important consideration that needs to be looked at carefully. Trade-off studies are needed to settle on specific systems. At the front end, i.e., around the injector region (1~ 2 MeV, ~ 20 μsec), use of silicon steel for the magnetic core and pulse forming networks (PFN) for long pulse seem to be a logical choice. In the midsection of the accelerator structure, from about 50 to 100 MeV, (and 1μsec) use of PFN's is still deemed efficient. Switching over to Metglas at ~ 5 μsec is perhaps the right transition point for the magnetic core. For cost and efficiency, trade-off studies for the use of metal-tape vs. ferrite and PFNs vs. pulse forming lines (PFL's) is most important for the remainder of the structure i.e., downstream of ~500 MeV (and ~ 200 nsec). We note that the great majority of the accelerator is downstream of ~500 MeV, so the architecture here will have the greatest impact on the driver cost and efficiency. Also, R&D efforts are needed to explore applicability and adaptability of solid-state pulsed power systems to meet demanding rise-time requirements.

A prototype module representing the high-energy end that would serve as a "prototypical module" for a demonstration driver (HIDIX/IRE) [4] is highly recommended to understand and address issues like alignment, gradient limits, efficiency, interaction impedances, fabrication and installation cost, etc.

The successful operational record of the multi-pulse DARHT facility [5] has provided the induction linac community with significant confidence in the understanding of key elements of the beam-physics, and design issues as well as operational reliability. Beam breakup instability (BBU) resulting from transverse beam-cell interactions is one of the most destructive instabilities in the electron linacs and as such had been a major consideration in their design. The "campaign" on DARHT-II to minimize the transverse impedance led to a much deeper understanding and effective control of this instability. The induction linac concept considered here will have several orders of magnitudes more induction cells. However, earlier studies for heavy-ion induction linacs indicate that the BBU amplitude growth would likely to be very slow and should not be significant for transport purposes [6]. The use of superconducting quadrupole magnets should also help by providing higher average available focusing field.

Related beam physics issues unique to the layout and deemed important are: 1) Individual beams interacting, electrically and magnetically with the module core as well as 2) mutual interaction of the beams among themselves. The group strongly recommends that comprehensive beam physics simulation studies that combine these effects should be undertaken for qualitative and quantitative understanding and look for signs of any hitherto unknown physics issues.

Opportunities exist both at LBNL and elsewhere for collaborative experimental studies on beam physics.

An outside example is University of Maryland Electron Ring (UMER) Facility. By using electrons for appropriately scaled experiments, UMER can investigate both transverse and longitudinal space-charge-dominated beam physics. Aided by 3-D simulations (using the WARP code) that accurately capture experimental results even without inclusion of the details of the

"ring" characteristics, UMER can be used to simulate a long linac and to explore the "long path-length" physics.

Additional resources for experimentally examining the transverse physics important to long path space-charge-dominated transport are the Paul-Trap devices currently operational at PPPL and Hiroshima University. These devices have been used to simulate the beam dynamics, as viewed in a frame moving with the beam, by applying the appropriate time varying focusing forces to the stationary non-neutral plasma in the trap.

Collaborative effort with DARHT as well as GSI and other heavy ion accelerator facilities should be explored.

Experimental opportunities at Berkeley Lab include experiments on the HCX and NDCX-II facilities. HCX produces a single driver-scale low emittance beam, and has been applied to stray-electron control, and to both electric and magnetic quadrupole transport. Consideration should be given to upgrading HCX so that it can provide answers to important questions about driver-scale beams. Enhancement of the rep rate to 5 - 10 Hz would facilitate studies of gas build-up and e^- cloud effects. An extension would enable transport of a driver-scale beam over multiple plasma oscillation periods.

Experiments on extensions of the NDCX-II would be very valuable to explore non-neutral transverse and longitudinal compression, bending, & focusing of beams, to validate some of the key concepts in the driver-to-target-chamber geometry considered.

Too often-overlooked yet critical systems - diagnostics and controls are integral to any "complete" accelerator based system. Phenomenal advances have been made in both fields in the last decade, aided by fast computer and matching algorithms. State of the art capabilities in these areas must be taken advantage of, and be integrated into any driver scheme. Comprehensive failure mode analysis of the entire system with folded in capabilities of both would drive the necessary "redundancy" requirements.

Though outside the immediate purview of this working group, the chair of the working group would like to make two personal observations:

1. There are several options for each of the component systems such as heavy-ion sources/injector, HIF targets and accelerator drivers, none without its merits and shortcomings. A "system approach" is necessary to whittle down the "options list" to a handful of technically feasible yet practical options; that would help to draw up a couple of "down selectable," complete, end-to-end options to pursue.
2. Both RF and Induction linacs have earned the reputation of being reliable machines and hold the promise as potential drivers. However, even with the advances in the accelerating gradient of SC linacs, and demonstrated reliable operation of Inductions linacs such as DARHT, two major practical limitations remain: 1) Long machine footprint translating into high machine cost, and 2) Accelerator power-feed requirements and geometry, and power management issues. It is in this context, that an inclusive and

broad view is necessary at this juncture. A hybrid that leverages the strengths of both the technologies may not only turn out to be the most attractive configuration but is a desirable path-forward with the potential of yielding a credible alternative and being taken as a serious competitor in the Fusion community at large. From a more pragmatic point of view, any driver for a demonstration system will be a billion-dollar class machine and therefore would not stand a chance of becoming a funded reality if it is not viewed as a carefully studied and laid out "**end-to end**" system. Also, the accelerator community at large would benefit to learn from the lessons of the Accelerator Transmutation of (Nuclear) Waste (ATW) national campaign in the 90's in light of the severe limitations imposed by the need of integration of the accelerator driven system to a conventional power grid as the ultimate goal.

References:

[1] J. Hovingh, V.O. Brady, A. Faltens, and D. Keefe, and E.P. Lee, "*Heavy-ion linear induction accelerators as drivers for inertial fusion power plants*," *Fusion Technol.* **13**, 255 (1988).

[2] R. O. Bangerter, "*The Induction Approach to Heavy-Ion Inertial Fusion: Accelerator and Target Considerations*," *Il Nuovo Cimento* **106 A** No. 11, 1445 (1993).

[3] S. S. Yu, W. R. Meier, R. P. Abbott, J.J . Barnard, T. Brown, D. A. Callahan, C. Debonnel, P. Heitzenroeder, J. F. Latkowski, B. G. Logan, S. J. Pemberton, P. F. Peterson, D. V. Rose, G.-L. Sabbi, W. M. Sharp, and D. R. Welch, "An Updated Point Design for Heavy Ion Fusion," *Fusion Science and Tech.* **44 (2)**, 266 (2003).

[4] See slide 31 of G.L. Logan's plenary presentation in this workshop: "*The Motivation for Heavy Ion Fusion*" http://ahif.lbl.gov/plenary-presentations/01-110523Logan.pdf?attredirects=0&d=1

[5] S. Nath, "*Linear Induction Accelerators At The Los Alamos National Laboratory DARHT Facility*" Proceedings of LINAC 2010, http://accelconf.web.cern.ch/AccelConf/LINAC2010/papers/th304.pdf

[6] S. Chattopadhyay,, A. Faltens, and L. Smith, "*Study Of The Beam Breakup Mode In Linear Induction Accelerators For Heavy Ions," Proceedings PAC 1980* *http://accelconf.web.cern.ch/AccelConf/p81/PDF/PAC1981_2465.PDF*

Chamber and Chamber Driver Interface working group

R. Moir[1], I. Kaganovich[2],
R. Bangerter[3], T. Brown[2], R. Cohen[4], M. Dorf[4],
A. Friedman[4], C. Helsley[5], E. Lee[3], B. Parker[6], P. Roy[3],
[7]C. Swenson, J.-L. Vay[3]

[1] Vallecitos Molten Salt Research
[2] Princeton Plasma Physics Laboratory
[3] Lawrence Berkeley National Laboratory
[4] Lawrence Livermore National Laboratory
[5] Fusion Power Corporation
[6] Brookhaven National Laboratory
[7] Los Alamos National Laboratory

July 12, 2011

The requirements for the chamber and chamber driver interface

For a summary of IFE Chamber Designs and Requirements see Wayne Meier's presentation: http://ahif.lbl.gov/presentations/110523MeierHIF-Workshop.ppt?attredirects=0&d=1

The chamber and chamber driver interface have to be designed to meet the following requirements:

1. The neutrons need to be moderated to prevent damage to the chamber and radiation to the external environment.
2. The beams have to be focused on targets with required precision,
3. Each target must be accurately injected into the chamber.
4. The accelerator and final focus system should be shielded from debris, radiation and neutrons.
5. The interface between chamber and accelerator requires pumping systems to pump down from chamber pressure (about 1mTorr) to accelerator pressure (for 1 km of $\sigma_s \sim 10^{-15}$ cm^2 electron stripping of 5-10 GeV ions at 10^{-8} Torr gives 3% loss),
6. The chamber has to be cleared after the shot and chamber conditions for the next shot have to be reestablished.
7. Power conversion system has to capture and transfer nuclear power and convert it to electrical power.
8. Tritium needs to be bred from lithium, recovered and recycled.
9. Valuable materials from target debris need to be recovered and recycled.

The Robust Point Design and the earlier HYLIFE-II design address most of the requirements listed above. The designs are well documented in the publications and reports.

We started our discussion with a summary of the 2001-2003 Robust Point Design (see Figs. 1 and 2) that made use of a radiation-driven, cylindrical hohlraum target based fairly closely on the NIF target with a few hundred megajoules of yield and about 5 Hz pulse rate. The walls were protected by a system of liquid jets, shown in Figs. 3 and 4. The array of jets was used to protect the beam ports and oscillating jets form the wall protection for a 30-year life of materials. This first wall protection is one of the significant advantages of IFE drivers compatible with thick liquid protection. The final focus used superconducting quadrupoles and dipoles. The magnets were cooled in common cryostats, shown in Fig. 2. Other target designs with one or two compact groups of beams would have a similar chamber design. However, when the yield approaches the GJ range, the pulse rate can be reduced to 1 Hz range. At this pulse rate, gravity can be relied upon for chamber clearing. Therefore, the chamber designs such as waterfalls (HYLIFE-I) can be considered for liquid wall protection. However, for high output per pulse designs it may be necessary to increase the radius of the chamber. Multiple chambers and large total power still have similar chamber considerations as the Robust Point Design even though the beams might be of much higher kinetic energy and therefore fewer individual beams are used for target illumination. Having fewer beams is an advantage for there is less likelihood of neutron escape.

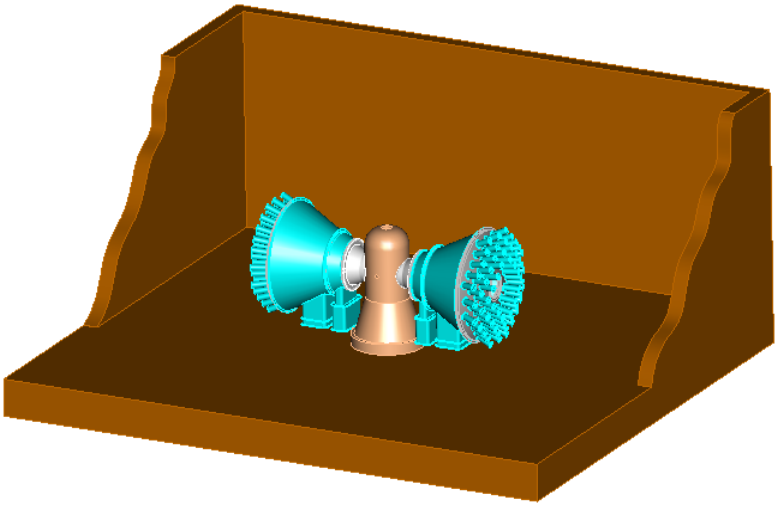

Figure 1: An isometric view illustrating the configuration arrangement of the Robust Point Design (RPD-2002) for a Heavy Ion Power Plant. To give scale the chamber and its final focal system are shown in the ITER building approximately 75 m long.

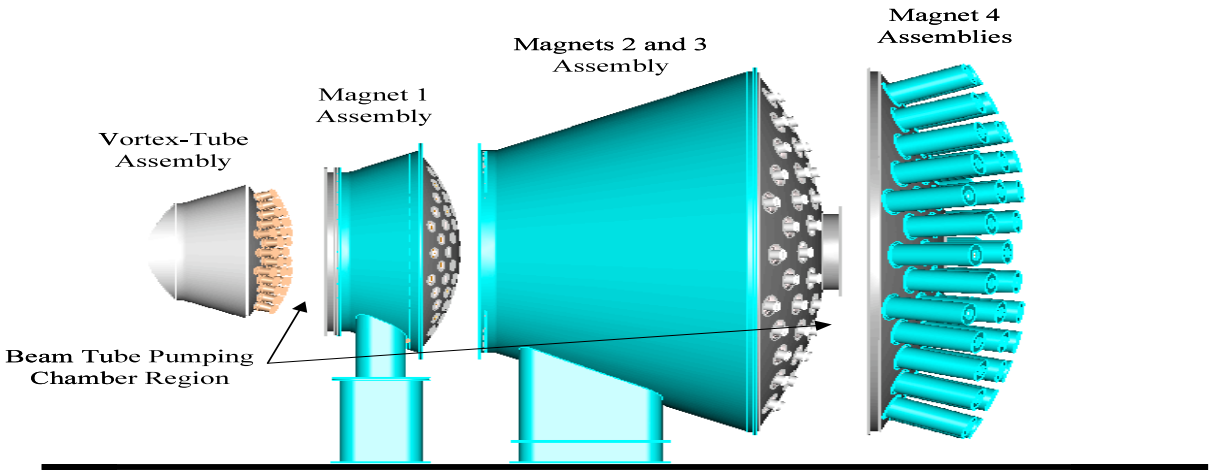

Figure 2: Magnet Assembly Overall Design Philosophy: quadrupole magnets are located in common cryostats. One cryostat structure houses magnet 1 quadrupole and a second cryostat contains magnets 2 and 3 quadrupole assemblies and another magnet 4. The final focus magnet is 6 m from the target and the array shown above is 10 m long. Intermagnet supporting structure is used to align and support magnets 1, 2, 3 and 4 plus add to the overall shielding requirements**.** The current design assumes that a complete final focus magnet section is replaced if maintenance is required**.**

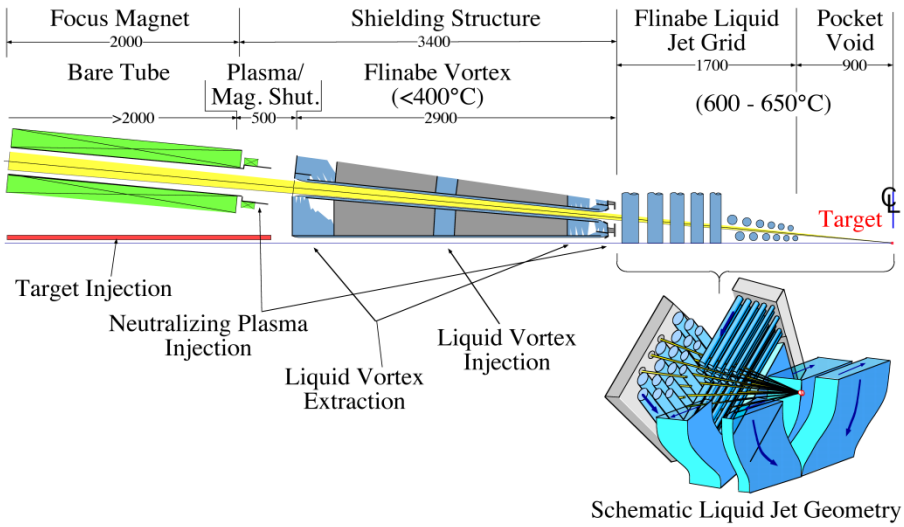

Figure 3: The Robust Point Design (RPD) beam line and schematic of liquid jet geometry.

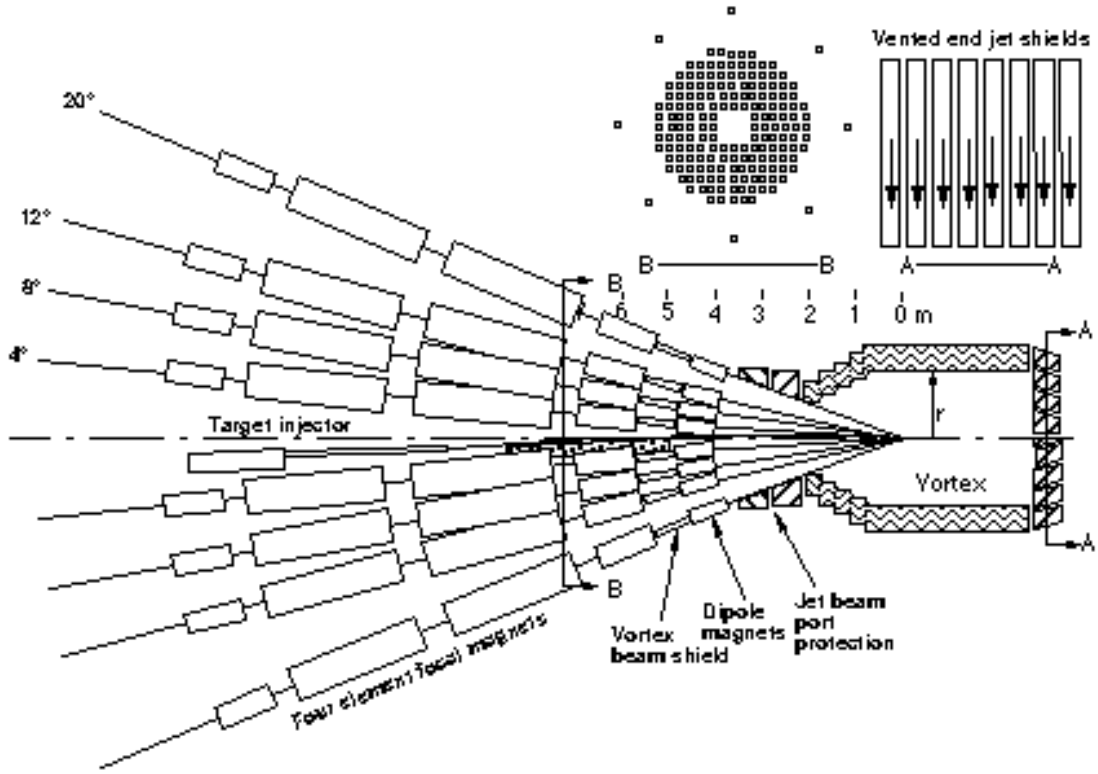

Figure 4: Vortex chamber and beam layout for the X-target. The final dipole bends the beams slightly.

In the RPD design the "pocket" is cleared of liquid debris after a shot by oscillating jets. Close fitting jets protect the beam ports from neutrons. A liquid vortex around each beam line with cooler molten salt reduces the vapor pressure. Shutters, included in the HYLIFE-II but not shown in RPD design have to be installed to prevent much of the vapor from entering the focal magnets. Plasma sources at each end of the vortex would provide electrons to neutralize the space charge of the beam passing to the target. A small dipole magnet and electrostatic electron clearing system, not shown, would prevent electrons from entering the focal magnet system. The final focus system and chamber interface shown in the prior four figures have been worked out in considerable detail and are well documented in publications.

High-level Interface Issues

Thermal management

Cold 4 K magnets must be insulated from hot 400^0 C Flinabe. Neutron and other radiative fluxes must be minimized to prevent quenching of the superconducting magnets or final focus elements need to be made from non-superconducting material. Hydraulics were studied in the water jet experiments at UC Berkeley and elsewhere.

Vacuum management

The vapor pressure in the target chamber, p ~10^{-3} Torr ,needs to be isolated from high vacuum in the beam lines at ~10^{-8} Torr. Debris from target must be kept out of beam lines. The effective solution is adding a mechanical shutter and the vortex with <400 °C molten salt with its lower vapor pressure.

Mechanical support

Due to pulsed power the structures are subject to large mechanical stresses. In addition, quadrupole magnets interact with each other. The mechanical support structure has to be designed to withstand these stresses. Reduction in size of the final focusing array is highly desirable, and opportunities to achieve this were discussed.

Radiation management

Magnets must be shielded for 30-year lifetime. Nuclear heating of the superconducting magnets must be as low as possible. Neutron loss to the external environment must be minimal. Studies by Latkowski showed the neutron damage lifetime of the magnets was over three decades.

Magnet alignment

Beam alignment must be maintained within less than 1mm. This requires magnet alignment and active correction with pulsed dipoles.

Maintenance and Assembly

The target and beam array design should allow power production in the event of the loss of a few beam lines. Failed beam lines have to be replaced in less than 6 months.

Utility Feeds management

Magnets are closely packed. This presents a challenge for providing utility feeds for cryogenic system, magnet power, instrumentation lines, and Flinabe lines from all of the ~100 beam lines.

The recommendations of the chamber and chamber driver interface group

A program on chamber and chamber driver interface R&D is recommended including one or more *multidisiplinary* HIF design studies of an integrated HIF power plant based on the RPD or similar illumination geometry and include new facilities to address chamber issues.

The study should develop complete baseline scenarios of simultaneous compression and focus of intense beams to target including resolution of uncertainties, optimization of the system, analysis of errors and misalignments, effects of beam stripping in collisions, gas desorption form the walls, imperfect neutralization of beam space charge and current with care being taken to examine alternatives that might relieve constraints inherent in the RPD configuration.

The current RPD chamber was designed specifically for an induction linac driver. However, it could be used for other driver configurations such as an RF driver with similar illumination

required by the target. One of the RF driver systems ("single-pass") shown at the workshop had a much higher kinetic energy. The induction driver could have had a higher energy if desired. The target for the single-pass RF system's chamber would only need to have a total of eight entrance beam ports, a tremendous simplification of the design that affects neutron containment, maintainability, and operational reliability. And it would need to be larger in diameter for conceptual RF systems have energy release per pulse that is significantly higher. The added wall damage effects of these higher yield pulses could be strongly mitigated by the intervention of the Lithium or Flibe or Flinabe jets and droplets typically of cm dimensions but a radius increase of perhaps 30 percent might be needed. A program to examine alternate uses of the RPD concept seems warranted.

The study should encompass the following:

- Perform a comprehensive survey of current status of knowledge on liquid wall designs for chamber, neutralization sources, beam neutralization requirements, and a tolerable momentum spread of the beam for focusing.
- Explore combinations of electrostatic and magnetic quadrupoles for achromatic focusing.
- Develop designs with thick liquid walls, including a liquid vortex with no moving parts with 50-year lifetime and reduced pumping power, and conduct fluid dynamic experiments to validate designs.
- Design rotating shutters to keep debris out.
- Study plasma sources for neutralization capable of working in a neutron radiation environment
- Include dipoles to steer the beam to the target.
- Perform comprehensive optimization of the final focus design for the HIF driver, including:
    - Study of beam pulse shaping with different individual beam pulses, each shaped in time.
    - Study of design with larger-radius beam spots allowed at the target. This would allow easier focusing and thus smaller beam aperture in the final focus.
    - Reconsider higher beam kinetic energy and reduced number of beams.
    - Consider elliptical holes in a shield for the final focus magnets instead of circular. This is more consistent with the beam shape.
    - Design array of final focus magnets with magnetic flux sharing to achieve a closely-packed array of beams. This would allow much reduced shielding.
    - Consider different materials for the final magnet, including normal conducting materials based on new recently developed materials to reduce the size of the magnet array.

It was noted that the proposed study requires many large scale simulations to be performed preferably in three dimensions, demanding for further development of three dimensional codes

for beam-plasma interactions including robust support for code development, benchmarking, maintenance, and user support.

Although much of the discussion centered on designs from US induction-linac HIF research programs, an effort should be made to broaden the opportunities for other and international institutions to participate in the recommended programs. Future programs should enable cooperation with partners where different systems approaches exist (e.g., RF systems).

The requirements of chambers compatible with an RF accelerator should be examined. The basic RPD design may be appropriate if the number of ports is reduced to 4 from each of two sides. This would greatly reduce the neutron radiation loss and fewer ports would allow a 'dog-leg' in each beam entry system that would assist in neutron control.

Summary

The RPD-2002 configuration was in an early stage of development. Further study should include many more design details, machine options and system trade-offs to make a full assessment.

Maintainability issues need to be fully understood from the standpoint of component activation and personnel access.

Total radiation loss from the beam ports needs to be examined with the goal being a better means of shielding or reducing the solid angle subtended by the beam entrance ports.

Design details of the beam tube pumping must to be developed to assure vacuum requirements are met.

The details of the beam matching and steering magnets, plasma sources, and shutters will affect the assembly process; consequently their integration into the design is needed.

References:

R. W. Moir, et al., "*HYLIFE-II: A Molten-Salt Inertial Fusion Energy Power Plant Design—Final Report,*" *Fus. Technol.* **25** (1994) 5-25.

The following three references describe the "Robust Point Design"—

T. Brown, G-L Sabbi, J. J. Barnard¸ P. Heitzenroeder, J. Chun, J. Schmidt, S. S. Yu1, P. F. Peterson, R. P. Abbott, D. A. Callahan, J. F. Latkowski, B. G. Logan1, W. R. Meier, S. J. Pemberton, D. V. Rose, W. M. Sharp, D. R. Welch, "*An Integrated Mechanical Design Concept for the Final Focusing Region for the HIF Point Design,*" unpublished report (2003).

S.S. Yu, W.R. Meier, R.P. Abbott, J.J. Barnard, T. Brown, D.A. Callahan, P. Heitzenroeder, J.F. Latkowski, B.G. Logan, S.J. Pemberton, P.F. Peterson, D.V. Rose, G-L. Sabbi, W.M. Sharp, D.R. Welch, "*An Updated Point Design For Heavy Ion Fusion*," *Fusion Science and Technology* **44** (2003) 266.

J. F. Latkowski and W. R. Meier, "*Shielding Of The Final Focusing System In The Robust Point Design*," *Fusion Science and Technology* **44** (2003) 300-304.

Workshop on Accelerators for Heavy Ion Fusion
Summary Report of the Workshop

by

P.A. Seidl, J.J. Barnard

AFRD
Accelerator and Fusion Research Division
Ernest Orlando Lawrence Berkeley National Laboratory
Berkeley, California 94720

May 23-26, 2011

This work was supported by the Director, Office of Science, Office of Fusion Energy Sciences, of the U.S. Department of Energy under Contract No. DE-AC02-05CH11231.

This document was prepared as an account of work sponsored by the United States Government. While this document is believed to contain correct information, neither the United States Government nor any agency thereof, nor The Regents of the University of California, nor any of their employees, makes any warranty, express or implied, or assumes any legal responsibility for the accuracy, completeness, or usefulness of any information, apparatus, product, or process disclosed, or represents that its use would not infringe privately owned rights. Reference herein to any specific commercial product, process, or service by its trade name, trademark, manufacturer, or otherwise, does not necessarily constitute or imply its endorsement, recommendation, or favoring by the United States Government or any agency thereof, or The Regents of the University of California. The views and opinions of authors expressed herein do not necessarily state or reflect those of the United States Government or any agency thereof or The Regents of the University of California.

This work was supported by the Director, Office of Science, Office of Fusion Energy Sciences, of the U.S. Department of Energy under Contract No. DE-AC02-05CH11231.

Workshop on Accelerators for Heavy Ion Fusion
Summary Report of the Workshop

by

P.A. Seidl, J.J. Barnard

AFRD
Accelerator and Fusion Research Division
Ernest Orlando Lawrence Berkeley National Laboratory
Berkeley, California 94720

May 23-26, 2011

This work was supported by the Director, Office of Science, Office of Fusion Energy Sciences, of the U.S. Department of Energy under Contract No. DE-AC02-05CH11231.

This document was prepared as an account of work sponsored by the United States Government. While this document is believed to contain correct information, neither the United States Government nor any agency thereof, nor The Regents of the University of California, nor any of their employees, makes any warranty, express or implied, or assumes any legal responsibility for the accuracy, completeness, or usefulness of any information, apparatus, product, or process disclosed, or represents that its use would not infringe privately owned rights. Reference herein to any specific commercial product, process, or service by its trade name, trademark, manufacturer, or otherwise, does not necessarily constitute or imply its endorsement, recommendation, or favoring by the United States Government or any agency thereof, or The Regents of the University of California. The views and opinions of authors expressed herein do not necessarily state or reflect those of the United States Government or any agency thereof or The Regents of the University of California.

This work was supported by the Director, Office of Science, Office of Fusion Energy Sciences, of the U.S. Department of Energy under Contract No. DE-AC02-05CH11231.