ERNEST ORLANDO LAWRENCE
BERKELEY NATIONAL LABORATORY

A FRAMEWORK FOR ENVIRONMENTAL ASSESSMENT OF CO2 CAPTURE AND STORAGE SYSTEMS

Roger Sathre, Mikhail Chester, Jennifer Cain, and
Eric Masanet

Environmental Energy Technologies Division
Lawrence Berkeley National Laboratory
Berkeley, CA 94720

May 2012

Supported by the U.S. Department of Energy under Contract No.
DE-AC02-05CH11231.

Disclaimer

This document was prepared as an account of work sponsored by the United States Government. While this document is believed to contain correct information, neither the United States Government nor any agency thereof, nor the Regents of the University of California, nor any of their employees, makes any warranty, express or implied, or assumes any legal responsibility for the accuracy, completeness, or usefulness of any information, apparatus, product, or process disclosed, or represents that its use would not infringe privately owned rights. Reference herein to any specific commercial product, process, or service by its trade name, trademark, manufacturer, or otherwise, does not necessarily constitute or imply its endorsement, recommendation, or favoring by the United States Government or any agency thereof, or the Regents of the University of California. The views and opinions of authors expressed herein do not necessarily state or reflect those of the United States Government or any agency thereof or the Regents of the University of California.

A Framework for Environmental Assessment of CO_2 Capture and Storage Systems

Roger Sathre[1*], Mikhail Chester[2], Jennifer Cain[3], and Eric Masanet[1,3]

[1] *Lawrence Berkeley National Laboratory, Berkeley CA, USA*

[2] *Arizona State University, Tempe AZ, USA*

[3] *University of California, Berkeley CA, USA*

** Corresponding author: Email: rsathre@lbl.gov; Phone: +1-510-495-2024; Fax: +1-510-486-6996*

Abstract

Carbon dioxide capture and storage (CCS) is increasingly seen as a way for society to enjoy the benefits of fossil fuel energy sources while avoiding the climate disruption associated with fossil CO_2 emissions. A decision to deploy CCS technology at scale should be based on robust information on its overall costs and benefits. Life-cycle assessment (LCA) is a framework for holistic assessment of the energy and environmental footprint of a system, and can provide crucial information to policy-makers, scientists, and engineers as they develop and deploy CCS systems. We identify seven key issues that should be considered to ensure that conclusions and recommendations from CCS LCA are robust: energy penalty, functional units, scale-up challenges, non-climate environmental impacts, uncertainty management, policy-making needs, and market effects. Several recent life-cycle studies have focused on detailed assessments of individual CCS technologies and applications. While such studies provide important data and information on technology performance, such case-specific data are inadequate to fully inform the decision making process. LCA should aim to describe the system-wide environmental implications of CCS deployment at scale, rather than a narrow analysis of technological performance of individual power plants.

Keywords: carbon capture and storage; life-cycle assessment; environmental impacts; climate change mitigation

1. Introduction

Our society is heavily dependent on fossil fuels, which supply about 81% of the world's primary energy [1]. Fossil fuels are used to produce about 67% of the world's electricity, to which coal, natural gas, and oil contribute about 41%, 21%, and 5%, respectively. The growing global demand for energy services, as well as the relative abundance of fossil fuels and the proven technologies for using them, suggest that fossil fuels will continue to be widely used in the future. This raises concern of climate destabilization caused by increasing atmospheric concentration of carbon dioxide (CO_2) released during the combustion of fossil fuels [2].

Technologies are being developed to capture a part of the CO_2 released by fuel combustion and industrial processes and to sequester the CO_2 in long-term storage sites. If effective, such CO_2 capture and storage (CCS) technologies would allow the continued use of fossil fuels with reduced concerns about climate destabilization. CCS has been proposed as an important component of the "stabilization wedge" concept, in which various climate change mitigation approaches are implemented simultaneously, with each approach achieving a gradually increasing amount of the required CO_2 emission reduction [3]. For example, the International Energy Agency [4] suggested that CCS used in electric power generation, industry, and fuel transformation plants could together capture 9.4 $GtCO_2$ per year by 2050, thus reducing total projected annual global emissions by 14%.

To be an effective means of climate change mitigation, CCS will need to be implemented globally on a very large scale. The resources used to implement CCS may then be unavailable for use in other mitigation strategies [5]. It is thus essential that a decision to employ CCS be informed by a clear understanding of the overall benefits and impacts of the technologies. Employing the life-cycle assessment (LCA) framework may allow the evaluation of system-wide energy and environmental footprints of CCS deployment. LCA includes four phases [6]. *Goal and scope definition* describes the purpose of the study, the system boundaries of the analysis, and the functional unit used for assessment and comparison. *Inventory assessment* quantifies the inputs and outputs of mass and energy attributable to processes occurring within the system boundaries. *Impact assessment* characterizes the effects of these inputs and outputs considering resource depletion, human health, ecosystem quality, and climate change. *Interpretation* of the inventory and impact assessment results seeks to identify significant conclusions, recommendations and implications for decision making.

LCA has often focused on evaluation of existing products and processes. When applied to complex, emerging technologies, however, the results can vary significantly depending on the system

boundaries and assumptions used by the researcher. For example, numerous LCA studies of biofuels have been conducted with widely varying conclusions due to inconsistencies in methodologies and system boundaries [7]. Although the results of each study may be reasonable given the specific approach used by the authors, the overall heterogeneity of results has provided policy-makers with limited basis for decisions. A similar challenge exists for assessment of future CCS systems. To effectively guide decision making, LCAs must credibly model the potential system-wide effects of CCS technologies implemented at large scale. Uncertainty and variability must be managed to reduce the risk of policy failure, or the implementation of policy that generates counterproductive results [8].

In recent years, a growing number of authors have conducted full or partial LCAs of power plants equipped with CO_2 capture [e.g. 9-18]. Fewer authors have analyzed the energy or environmental implications of CCS implemented at a national scale [e.g. 19-21]. In this paper we do not critique these specific studies or conduct a new LCA; rather, we identify and develop the fundamental elements that a robust assessment framework for CCS must include for sound decision making. Other authors have discussed the challenges and requirements of the LCA process in general [e.g. 22,23], but the existing literature lacks a comprehensive overview of appropriate LCA methodology specific to CCS. Here we describe challenges specific to the environmental analysis of CCS, and outline approaches to ensure that such an LCA is as robust as possible. This work will assist energy system and policy analysts to make better estimates of the full implications of future CCS systems, and will provide insight to scientists and engineers regarding critical performance parameters of CCS technologies. This knowledge, in turn, will be needed by policy-makers to effectively compare CCS with other mitigation strategies [24]. The goal of this paper is to identify the critical considerations for future LCA practitioners. Developing an LCA around these recommendations is planned in future work.

The following section briefly describes the CCS system components. Next, we discuss several key issues including energy penalty, functional units, scale-up, non-climate environmental impacts, uncertainties, policy-making needs, and market effects. We conclude with observations on the role of LCA in CCS implementation.

2. The CCS system

The CCS system consists of direct processes such as capturing CO_2, transporting the CO_2 from the capture site to a storage site, and placing the CO_2 into the storage location (Figure 1). The system also includes indirect processes including production and provision of the required infrastructure and

materials, extraction and transport of fuels, and maintenance and monitoring of the processes. In addition to the technological system components, implementation of CCS has consequential effects in other sectors which may also be significant.

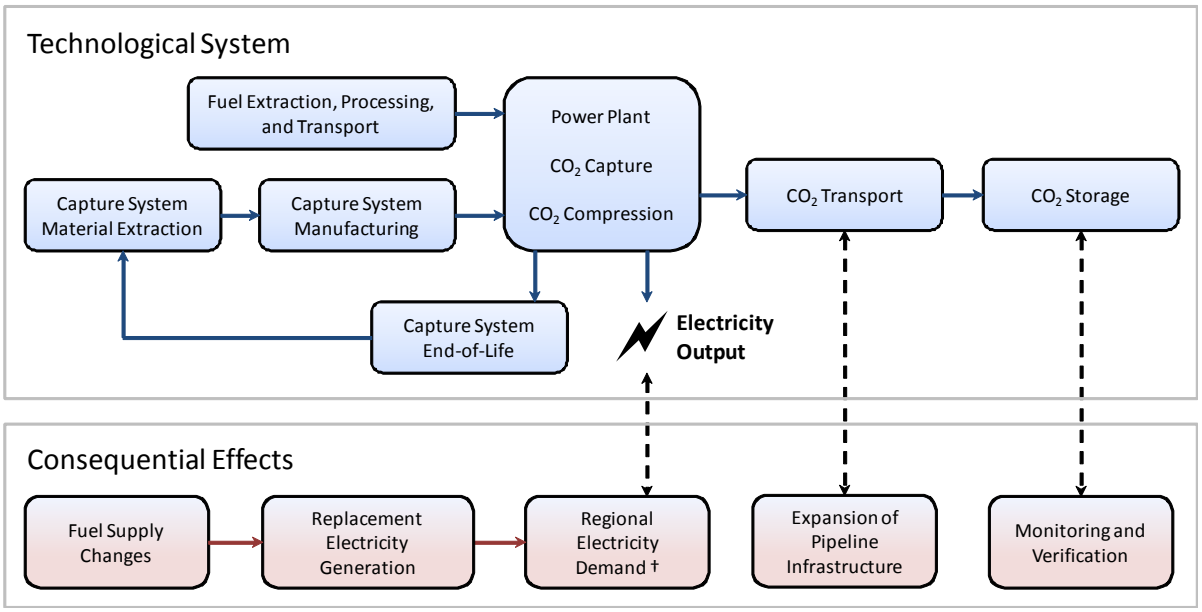

Figure 1. Components of a CCS system, and linkages to their consequential effects. †Assumes that regional electricity demand will not decrease so additional electricity generation is needed to replace CCS energy penalty losses.

CO_2 capture is generally considered suitable for stationary sources that emit at least 0.1 $MtCO_2$ per year. Stationary sources smaller than this emit a small fraction of total global emissions [25], and CO_2 capture from smaller sources may be cost prohibitive [26]. Globally, such large stationary sources together emit about 13.8 $GtCO_2$ annually [27], roughly half of all fossil fuel CO_2 emissions and a quarter of all anthropogenic GHG emissions. Among large stationary sources, coal-fired electric power plants contribute about 60% of CO_2 emissions. Natural gas- and oil-fired power plants contribute about 11% and 8%, respectively. Cement plants, oil refineries, and steel mills contribute about 7%, 6%, and 5%, respectively. Fossil fuel-fired power plants are thus the largest opportunity for CO_2 capture, and are the focus of this paper.

Three main strategies can be used to capture CO_2 from power plants: post-combustion, pre-combustion, and oxy-fuel. In post-combustion capture the fuel is burned in air, and CO_2 is separated from nitrogen and other components of the flue gas. Pre-combustion capture converts solid coal fuel

into CO_2 and hydrogen, and separates the CO_2 from the hydrogen prior to combustion. In an oxy-fuel process air is separated into nitrogen and oxygen and the fuel is burned in nearly pure oxygen, resulting in a flue gas of mainly CO_2 and water vapor, from which the CO_2 is separated. All of these CO_2 capture processes involve some form of gas separation. Major categories of separation media include physical and chemical solvents, solid adsorbents, and membranes. Presently, post-combustion capture using chemical solvents such as monoethanolamine (MEA) is the most mature capture technology [28]. However, many promising technologies are currently under development such as ionic liquids, zeolites, and metal-organic frameworks [29].

After the CO_2 is captured it is compressed to a "supercritical" fluid with properties between those of a gas and a liquid. It is then transported to a location suitable for long-term storage. Although CO_2 may be transported by truck, rail, or ship, the most likely method for large-scale transport is pipeline [25].

CO_2 is then injected deep below the surface, either in ocean water or in geologic formations. CO_2 injected into the ocean may eventually enter the atmosphere over a time span of centuries, and may cause acidification of ocean water resulting in ecological impacts [25]. Geologic formations suitable for CO_2 storage include deep saline aquifers, oil and gas reservoirs, un-mineable coal seams, and possibly organic-rich shale and basalt formations [30,31]. Deep saline formations are very extensive, with an estimated global capacity of at least 1000 $GtCO_2$, but their characteristics are less well understood than other potential storage deposits [25]. Estimated capacity in oil and gas fields is at least 675 $GtCO_2$, and in un-mineable coal seams is at least 3 $GtCO_2$ [25]. At levels of global sequestration proposed by IEA [4] for the year 2050, these formations could continue to accept CO_2 for several centuries or longer.

3. Key issues

The following sections summarize seven key issues that must be rigorously considered by practitioners when developing CCS LCAs. These issues have been identified through a review of the existing literature, and in consideration of the aforementioned challenges associated with application of LCA to complex, emerging systems.

3.1. Energy penalty

CCS is an energy intensive process and generally uses both heat and electricity. For example, heat is needed to regenerate MEA and is provided by steam which could otherwise have been used to

produce electricity. Additional electrical power is used for operating pumps and fans and for compressing CO_2. The energy penalty associated with CCS applied to an electric power plant may be expressed as either the increase in fuel input per unit of delivered electricity, or as the decrease in electricity output for a given fuel input [25].

A review of LCA studies that directly compare power plants with and without CCS, allowing quantification of the energy penalty and emission reduction of CCS, shows that the increase in fuel energy required per unit of electricity output associated with CCS ranges from about 16% to 65% [32]. About 90% of the carbon in the fuel is captured (in the form of CO_2), but additional fuel is needed to produce a unit of electricity. Thus, the net reduction of flue gas CO_2 emissions from producing electricity with and without CCS is less than 90%. The net life-cycle CO_2 emission reduction between cases with and without CCS is even lower due to increased CO_2emissions from mining and transporting the additional fuel, and emissions from manufacturing CCS infrastructure. The net life-cycle GHG emission reduction is still lower, averaging 74%, due largely to increased methane emissions from coal beds (for coal-fired plants) and natural gas leakage (for natural gas-fired plants).

There is a thermodynamic minimum energy required for gas separation and compression, which provides an absolute limit for efficiency improvements [19]. The minimum energy penalty varies for different types of power plants and capture systems due to their different thermodynamic processes [33]. For example, post-combustion capture requires separating CO_2 from nitrogen, while pre-combustion capture requires separating CO_2 from hydrogen. Since CO_2 is relatively easier to separate from hydrogen than from nitrogen, the energy penalty of pre-combustion capture is potentially lower than that of post-combustion capture [29]. Another difference is that between coal- and natural gas-fired plants. Since coal combustion produces more CO_2 per unit of thermal energy than natural gas combustion, coal-fired plants require the capture of more CO_2 per unit of electricity generation. Other factors that influence the energy penalty include the higher pressures associated with pre-combustion capture, which are more favorable for CO_2 separation than the low pressure flue gas conditions associated with post-combustion capture.

The development of novel capture technologies may increase the efficiency of future CCS systems, but will not eliminate the energy penalty. Using low-grade waste heat from a power plant for regenerating capture media can increase the efficiency of the systems, by using heat that is not suitable for electricity production. However, using waste heat for CCS may conflict with other energy efficiency and climate change mitigation measures such as combined heat and power (CHP)

production or combined cycle electricity production. Regardless of efficiency improvements in the CO_2 capture process, energy will still be needed for CO_2 compression to allow transport and storage.

The energy penalty of CCS is widely acknowledged and has been included to some extent in all previous LCAs of CCS considered in this paper. We recommend that LCA practitioners use appropriate energy penalty values for the capture technologies being analyzed, considering potential future improvements in capture efficiencies. The system-wide implications of the energy penalty should be taken into account, not limited to the power plant boundaries but also including upstream and downstream components such as fuel supply emissions and expanded infrastructure requirements.

3.2. Functional units and demand for electricity

A functional unit allows the use of LCA results to compare the environmental performance of different (and often competing) technology options for meeting a given societal service. A functional unit should be selected to facilitate and inform the decision-making process, so different functional units may be appropriate for different uses. Most previous CCS LCAs have analyzed electric power plants and have quantified results on a *per kWh of deliverable electricity* basis. While useful for understanding the differences in technologies at the power plant, this functional unit does not aid in considering large-scale effects such as how reduced efficiencies from a CCS installation at one plant may necessitate increased electricity generation from other power plants in order to meet the electricity demand in a given region. It gives no indication of the output of the overall system and whether total regional demand is adequately fulfilled.

The implementation of CCS will result in less available electricity per unit input of fuel, due to the energy penalty described previously. To capture these dynamics, CCS systems should be evaluated from the broader context of the grid-wide demand and supply of electricity, rather than focusing on individual power plants [20]. The reduced electricity output due to CCS implementation could, for example, be accommodated through reduced electricity demand through efficiency improvements [19]. The changing demand for electricity could also be satisfied through other technologies including renewable sources with low CO_2 emissions [24]. These interactions can best be determined by an integrated analysis of the entire energy sector, accounting for the dynamics of demand and supply of various energy services.

Two approaches have been used to achieve a broader functional unit to identify the system-wide effects of CCS deployment. A simplified approach is to model the impacts of compensating for the

energy penalty of an individual power plant. NETL [14] used this approach in an LCA of a retrofitted power plant, with a scenario including "make-up power" based on average grid characteristics to compensate for the reduced electricity output from the retrofitted plant. A more comprehensive approach, which requires integration of LCA and energy system analysis, is to conduct scenario analyses of future energy system developments including CCS deployment. For example, Schreiber et al. [20] analyzed future scenarios of CCS deployment within the German power sector to evaluate the energy and environmental implications of CCS, and House et al. [19] and Bistline & Rai [21] modeled future CCS deployment within the US coal-fired power fleet to determine trade-offs and priorities.

In some cases it may be appropriate for a CCS LCA to express results in more than one functional unit. For example, captured CO_2 can be injected into oil reservoirs in a process known as enhanced oil recovery (EOR), serving to sequester CO_2 and allow the recovery of additional quantities of oil. In this case the functions of a CCS system would include both electricity generation and oil production, and it may be necessary to allocate CO_2 storage benefits to these two products. Jaramillo et al. [34] explored various allocation methods for EOR LCA, finding that the allocation method can significantly affect the calculated emissions of the electricity and oil. Another instance where co-production might be an issue is in combined heat and power (CHP) plants, where the application of CCS may reduce the amount of cogenerated heat from a power plant, thus requiring system expansion to include a separate source of heat to maintain the same functional units of heat and electricity.

We recommend that LCAs of CCS applied to power plants use a broad functional unit focusing on the overall demand for electricity. This will require cooperation between LCA practitioners and energy system analysts to incorporate future dynamics not only of CCS deployment but of electricity demand and supply. Analysis at the level of individual power plants is a necessary step, but insufficient to understand the system-wide implications of CCS. In some cases, additional system functions may need to be considered such as oil recovery or heat.

3.3. Consideration of non-climate impacts

Because the direct goal of CCS systems is CO_2 emission reduction, many analyses of CCS systems have focused on carbon accounting while forgoing the evaluation of non-climate effects. Although climate impact analysis is essential, in isolation it does not provide sufficient information to evaluate the overall costs and benefits of CCS systems. A CCS system should avoid regrettable substitutions such as trading a reduction in CO_2 for an increase in impacts from another pollutant. LCA

practitioners can help evaluate non-GHG effects allowing for the development of strategies that lead to optimal reductions across multiple societal, resource, and environmental impacts.

Several LCA studies of CCS systems have addressed other environmental indicators in addition to energy use and CO_2 emissions, and can help identify trade-offs between the climate benefits of CO_2 capture and increased impacts elsewhere. Table 1 shows key results from LCA studies that have directly compared the environmental performance of electric power plants with and without CCS [9-18,20]. Some studies quantified absolute emission changes, while others quantified changes in aggregated impact categories. In general, there is large variability in impacts between the studies and cases. Much of the variability involves the magnitude of the change, but there is also variation in the sign (positive or negative) of some changes. Some of this variation is due to different capture technologies in the plants, while other variability is due to different system boundaries and assumptions in the studies. Importantly, all of the impacts identified by these studies occur above ground; no underground impacts were described, despite their potential significance [35].

Table 1. Percent change in non-climate environmental impacts between electricity production without and with CCS, as reported in selected LCAs.

Reference [a]	Indicator [b]										
			ABD	ODP	FWAE	MAE	TEP	POP	EP	AP	HTP
Koornneef et al. [10]											
Coal/USCPC/MEA			34	55	46	-27	57	27	80	46	181
Korre et al. [13]											
Coal/PC/MEA			53	-	135	-	-	9	50	21	-29
Coal/PC/K+PZ			36	-	85	-	-	-4	0	-21	-39
Coal/PC/KS-1			30	-	67	-	-	-7	25	-8	-43
Pehnt & Henkel [12]											
Coal/PC/MEA			-	-	-	-	-	156	100	-9	25
Coal/IGCC/Selexol			-	-	-	-	-	17	25	30	22
Viebahn et al. [9]											
Coal/PC/ MEA			-	-	-	-	-	96	44	39	-
Singh et al. [18]											
Gas/NGCC/MEA			-	-	166	150	143	21	33	43	124
	Emission										
	NOx	SOx	PM	NH_3	CO	VOC	Pb	Hg			
Schreiber et al. [20]											
Coal/PC/MEA	32	-91	-	-	-	-	-	-	111	57	265
Coal/SCPC/MEA	37	-91	-	-	-	-	-	-	113	54	250
Coal/USCPC/MEA	26	-92	-	-	-	-	-	-	61	21	123
Lignite/PC/MEA	47	-88	-	-	-	-	-	-	189	44	772
Lignite/SCPC/MEA	39	-89	-	-	-	-	-	-	156	50	718
Lignite/USCPC/MEA	28	-90	-	-	-	-	-	-	138	25	425
Odeh & Cockerill [11]											
Coal/SCPC/MEA	44	-99	-48	9300	-	-	-	-			
Coal/IGCC/Selexol	-17	10	0	-	-	-	-	-			
NETL [14]											
Coal/PC/MEA	-76	-46	-97	241	69	0	192	6			
NETL [17]											
Coal/SC/MEA	38	-90	39	15	36	40	2	60			
NETL [15]											
Coal/IGCC/Selexol	-10	17	-26	-54	-38	-50	31	17			
NETL [16]											
Gas/NGCC/Amine	17	19	17	8	18	17	15	28			

[a] For each reference, results are listed for each combination of Fuel/Generation technology/Capture technology (PC: pulverized coal; IGCC: integrated gasification combined cycle; NGCC: natural gas combined cycle; USCPC: ultra-supercritical pulverized coal; SCPC: supercritical pulverized coal)

[b] Indicators include: ABD: abiotic resource depletion; ODP: ozone layer depletion; FWAE: fresh water aquatic ecotoxicity; MAE: marine aquatic ecotoxicity; TEP: terrestrial ecotoxicity; POP: photochemical oxidation; EP: eutrophication; AP: acidification; HTP: human toxicity.

In general, these studies have found increased human health and environmental impacts due to CCS. Emissions of NO_X appear to increase when CCS is used, primarily due to increased fuel throughput and indirect emissions. Emissions of SO_X and particulate matter decrease; they are either removed by the CO_2 capture solvent or by additional scrubbers placed before the CO_2 capture unit to reduce solvent degradation. Acidification potential is found to increase in spite of the decreased level of SO_X emissions, likely due to increased emissions of other acidifying agents such as NO_X and NH_3. Increased coal mining and transport produce emissions that contribute to additional impacts from eutrophication and photochemical oxidation. However, the limited number of studies and the large variation prevent definitive conclusions regarding non-climate environmental impacts [32].

The studies also illustrate the importance of considering the environmental impacts associated with the life-cycle of CO_2 capture media. For example, several studies point out toxicity and ecological impacts associated with MEA capture solvents. These impacts occur at different stages of the MEA life-cycle including the solvent production process, solvent degradation during use, and from incineration or landfilling of reclaimer wastes. Koornneef et al. [10] found a large increase in human toxicity potential due largely to emission of ethylene oxide to the air and water during MEA production. Schreiber et al. [20] and Singh et al. [18] found significant increases in human toxicity and ecotoxicity due in part to emissions from MEA production and the capture unit.

To produce LCA results that contribute to robust policy decisions, LCA practitioners should endeavor to quantify all relevant environmental benefits and impacts of CCS systems, including non-climate aspects. Analysis should not be limited to the capture process, but also include upstream processes (e.g., fuel supply and infrastructure production) and downstream processes (e.g., CO_2 transport and storage). There is currently substantial uncertainty regarding the overall environmental effects of some processes, and we recommend additional research and integration of key topics such as capture solvent impacts [e.g. 36] and geological sequestration impacts [e.g. 35]. Uncertainty management is discussed in more detail in the following section.

3.4. Uncertainty management

LCA is a meta-analysis that consolidates and evaluates information about a system's behavior. Robust uncertainty assessment can assist practitioners in identifying when a policy or decision is likely to lead to the desired environmental outcome(s), and the information that is needed to improve LCA quality. Traditionally, reducing uncertainty in LCA is achieved by focusing on improving parameter quality through an iterative process where data quality assessment is combined with sensitivity analysis. This approach, while useful for improving the input data that have the largest

effects on final results, does not acknowledge the accuracy of the mathematical models employed or the potentially large variations in deployment scenarios for future CCS systems. Uncertainty in CCS LCA should be evaluated from parameter, model, and scenario considerations [37].

Parameter uncertainty is tied to data quality, incorporating knowledge of central tendencies and ranges of key variables. A significant parameter uncertainty for CCS LCA is the incomplete characterization of life-cycle impacts of some materials and processes. For example, several LCA studies found the life-cycle toxicity effects of MEA capture solvent to be very significant, but there is a large range of impacts between studies (see Table 1). The large uncertainty surrounding the impact characterization of MEA would decrease with further analysis [36,38]. Additionally, the unavailability of proprietary chemical production process data may be a barrier to identifying the life-cycle footprints of novel capture media such as metal-organic frameworks. While simplified tools can be used to estimate the energy use and environmental effects of chemical production from parameters describing the molecular structure [39], current tools and databases fall short of providing comprehensive and accurate footprints for a wide range of chemicals.

Model uncertainty considers the accuracy of mathematical models in simulating real-world system behavior. For example, the effectiveness of subsurface CO_2 storage is a critical life-cycle component which requires accurate modeling to reduce uncertainty in CCS assessments. The permanence of geologic storage depends on various physical and geochemical trapping mechanisms that retain CO_2 [25]. Better understanding of these mechanisms is being developed via models of chemical and geologic processes to determine the likelihood of permanent storage and conditions for potential leakage. The permanence of CO_2 storage is a key assumption made by most previous CCS LCAs, although Viebahn et al. [9] did include a sensitivity analysis of CO_2 leakage at varying rates. The time-dependent climatic impact potential of CO_2 emissions are increasingly well understood through modeling of radiative forcing [40]. Beyond these physical effects, however, current LCA methodology is poorly suited for analyzing extended time horizons, which involves questions of time discounting of impacts and intergenerational equity [41,23]. A further example is potential leakage of CO_2 from storage formations into drinking water aquifers, which could decrease water pH and mobilize arsenic and other toxins, leading to long-term human health impacts [35]. Modeling such low probability, high impact events is challenging, but needed for robust analysis of CCS systems.

Scenario uncertainty, which may be significant for future estimates of CCS deployment, evaluates how actual behavior may differ from normative assumptions. Large-scale deployment of CCS technologies in horizontally-integrated systems (i.e., systems where no single stakeholder controls all

decisions) will be affected by many policy and market mechanisms leading to many possible futures. Policies that are formulated based on a single normative future behavior may produce unintended consequences if future behavior is different than what was assumed, so it is necessary to incorporate the varied effects of decision makers and the signals they respond to. Technologies that perform adequately under a range of plausible scenario conditions may be preferred over other technologies that perform superlatively under some conditions but fail under other conditions.

The LCA practitioner faces various sources of uncertainty when analyzing the potential impacts and benefits of future CCS systems. We recommend that these uncertainties be transparently acknowledged and that efforts be made to bound and reduce their potential impact on policy success. Reducing parameter uncertainty may require additional research into specific processes and their effects, while model uncertainty may be reduced through better understanding of physical systems and how they can be analytically represented. Comprehensive scenario analysis can help identify decision pathways that are robust over a range of uncertainties. Understanding and quantifying the shortcomings of LCA in predicting wider effects and the bounds of CCS system futures is necessary for crafting policy that does not prescribe a one-fit solution. Early identification of policies that require narrow uncertainty bounds, and the tailoring of analysis to meet these bounds, is in the best interest of climate change mitigation goals [42].

3.5. Scale-up issues

Projecting from current small-scale to future regional, national, or global deployment is a major challenge for CCS LCA. CCS currently occurs on the order of several *million* metric tonnes of CO_2 per year, part of which is in support of enhanced oil recovery efforts [43]. To achieve the *billions* of tonnes per year of CO_2 storage suggested by Pacala & Socolow [3] and IEA [4], it will be necessary to scale up the current level of operations by perhaps 1000 times or more. LCA practitioners must consider a variety of issues when moving from small to large scale. These include increasing the technological scale from pilot to industrial, increasing the analytical scale from one power plant to many, and increasing the operational scale from small to large. These issues are discussed below.

The technological scale of current CCS activities is modest relative to the very large scale required for effective climate change mitigation [43]. For example, amine-based capture is generally considered a mature technology in the gas processing industry, where it is used to "sweeten" natural gas by removing CO_2 and other impurities like H_2S. Still, it is currently used to remove only about 50 $MtCO_2$ annually (most of which is released to the atmosphere and not sequestered) [25], which is about 0.5% of the CO_2 capture projected by IEA [4] for the year 2050. Other capture processes such

as pre-combustion and oxy-fuel are still under development, and novel capture media such as metal-organic frameworks are still at laboratory scale [29]. For processes that are currently at preliminary (i.e., bench-scale) stages of development, it is difficult to accurately assess future performance at a global industrial scale. For example, mass and energy balances of bench-scale processes may not scale up linearly to industrial scale [44]. A challenge in estimating the environmental performance of future technologies lies in bounding the potential variability between current, small-scale performance and future, large-scale performance. Learning curve data from other energy-related technologies may offer guidance on costs and implementation [45], though the lack of comparative at-scale processes is a hindrance to technological evaluation.

The analytical scale is also important, e.g., whether the analysis covers a single power plant or a regional or global CCS system. CCS applied to a single power plant will cause marginal changes in electricity production. For example, production from a new CCS-equipped plant may replace power from marginal sources, which may be old, inefficient coal-fired plants, resulting in a large CO_2 emission reduction. Large-scale adoption of CCS, however, will cause multiple marginal changes to the production system, and eventually will change the structure of the system itself. As additional old plants are retired and replaced, the performance of the system as a whole improves, and the CO_2 emission reduction from each new CCS-equipped plant may decline. Electricity supply systems continue to evolve over time, with CCS being only one part of that evolution, and marginal electricity production in the decades to come will be affected by the development of the energy system as a whole [46]. The identification of marginal electricity production depends on numerous factors including the time frame of analysis, the future development of technology, incentives to reduce CO_2 emissions, and the deployment of sources such as nuclear and renewables. To better understand the climate benefits from differing scales of CCS implementation, LCA practitioners should collaborate with other modeling domains to incorporate issues such as the future dynamics of electricity supply systems.

The operational scale of CCS should also be considered. A technology that can be successfully deployed at small scale may possibly be unsustainable on a large scale, or may have unforeseen requirements when operated at large scale. For example, resource constraints for key materials may be encountered as novel CO_2 capture technologies are scaled to a global level, due to limited absolute quantities of materials or to conflicts with other potential uses of the materials. For example, constraints have been identified for materials used in some types of photovoltaic cells [47], and the deployment of some energy technologies will significantly increase the need for particular metals [48]. Upfront analysis of resource requirements and availability may guide researchers as they

develop new capture technologies. These analyses would project future demand for particular materials both within the CCS system and for other uses, estimate the quantities available through primary extraction and recycling, and identify potential constraints. A final example of potential operational scale constraints is the mining and transport infrastructure that supplies fuel to power plants. Since more fuel will be needed to produce a unit of electricity in a CCS-equipped plant, bottlenecks may emerge in fuel supply networks. This potential should be evaluated, and environmental impacts from necessary infrastructure expansion should be considered.

We recommend that CCS LCAs explicitly consider the potential for non-linear changes as the CCS system expands from an individual installation to a regional or global complex. These non-linearities may be beneficial, such as economies of scale or technological optimization, or they may be disadvantageous, such as constraints of material resources or support system capacity. In any case, a realistic analysis must take into account the different characteristics of systems at varying scales.

3.6. Policy-making needs

The use of LCA is shifting from the evaluation of system footprints to include consequential aspects. As the framework matures, it is becoming more recognized that LCA should be implemented on policy and decision questions rather than technology options. While traditional LCAs are valuable for technology-specific questions, their inability to be scaled to broader questions justifies a more comprehensive system boundary structured for policies and decisions, as well as integration with modeling techniques that can better capture issues of system dynamics and technological scale over time. For example, the traditional LCA framing around the question "how can a manufacturer reduce their product's footprint?" does not assist policy-makers when asking "how can CCS be implemented with maximum CO_2 emissions reduction at minimum social cost?" The second question requires that an LCA establish a system boundary that includes components such as the changes to the electricity generation mix, the implementation of a transport and storage infrastructure, and the tradeoffs between climate and non-climate effects. Furthermore, the question "how can society best act to mitigate the impacts of climate change?" requires a still broader approach incorporating various technologies, behaviors, and strategies [24,49]. Public acceptance of a technology such as CCS is crucial for its widespread adoption in a participatory system. The LCA framing around policy and decision making offers an opportunity to consider and compare many options for implementation that minimize costs and maximize benefits system-wide.

CCS LCAs should be structured around prospective policies that reduce GHG emissions from CCS systems, rather than retrospective analysis that quantifies the life-cycle footprints of different

technologies. Retrospective LCAs generally use an attributional approach that describes the characteristics of an existing system, while prospective LCAs use a consequential approach that describe the effects of a change [50]. The consequential approach has gained considerable momentum in the LCA community because it is more focused on evaluating the systems-level effects of policy and decisions. In contrast, attributional LCAs, while valuable for understanding critical processes in the life-cycle of a system, are generally focused on evaluating the effects of a technology or process independent from its role in larger policy interests. In the context of CCS, the decision to use attributional versus consequential approaches is important because it determines how the final results may be applied to larger societal goals. Recognizing early in the deployment of CCS technologies that LCA is most valuable when structured around prospective questions will allow for better policy and decision recommendations that do not infer broad meaning from technology-based indicators. Although attributional analyses may be used to improve the footprint of the technology itself, ultimately a consequential approach that considers optimal deployment of technologies to achieve climate mitigation goals is most useful. For example, early adoption and rapid diffusion of CCS are potentially more important factors to achieving climate change mitigation targets than are the types of CCS technology adopted and their performance parameters [21]. Policies that incentivize CCS adoption can look to environmental LCA recommendations for assistance when deciding whether to facilitate early implementation of CCS to gain experience at increasing scale.

Formally, LCA must include life-cycle costing [6] which would further inform decision makers. In a carbon-priced market, electricity generation enterprises would choose between the emerging CCS technologies and low-carbon fuels including renewables. Appropriately priced CO_2 would send signals that may encourage a utility to purchase or generate electricity with wind or solar instead of fossil fuels. CCS technologies, depending on their cost and efficiency, would add to the utility's choice set. CCS could also potentially be applied to biomass-fired power plants, resulting in net removals of CO_2 from the atmosphere. Ultimately, the cost of using CCS technologies would have to be less than the cost of using lower carbon fuels or renewables, and life-cycle costing can help forecast these transitions including politically feasible strategies.

3.7. Market effects

Prospective CCS LCAs should consider market forces and how individual decision makers within the larger system respond to market signals and ultimately affect the impact of a policy. By nature, retrospective LCAs consider systems that have a normative behavior, as the system-wide footprint of a product, process, or service was pre-determined as markets operated with particular behaviors that dictated components such as material origins, transportation, manufacturing locations, and material

selection. The retrospective approach treats system behavior as static where all processes will continue to behave as they have in the past, making marginal assessment challenging. For new systems that have not yet been deployed, the prospective LCA approach requires that practitioners consider how markets will respond. The example of biofuels highlights the challenges of evaluating market effects. Bioenergy LCAs have recently considered market effects including indirect land use change (from perturbing bio-feedstock markets) and the GHG balance of biomass-fired electricity (which is affected by the CO_2 intensity of the marginal electricity source) [51,52,42]. The uncertainty in how the market responds drives the uncertainty of results and limits recommendations of the LCA.

CCS LCAs will need to consider a range of individual behaviors that may shift the environmental performance of the larger system. Local and remote actors will operate within CCS systems making decisions based on signals from each other or policies. Including these actors in LCA allows the practitioner to consider the role of individual decision makers in the system, and how their decisions will affect results. Local actors are those associated with the direct process of interest, in the case of CCS, using CO_2 capture technology (e.g., a power plant owner or operator). Their decision to use the technology will be influenced by policies that dictate emission reductions at their facilities. Remote actors are those making decisions elsewhere as a result of the local actor, and responding to economic signals. CCS remote actors include technology manufacturers and possibly CO_2 sequestration enterprises. A power plant operator (local actor) subject to emission reduction policy may choose to install CCS and contract with other firms for transport and storage of CO_2 (remote actors). The storage firm may have more than one option for final sequestration and will choose one based on market conditions. As the LCA system boundary expands, the decisions of these remote actors become numerous and not easy to track. The uncertainty associated with these market effects may be large and impede the ability to formulate recommendations from the LCA results. Furthermore, the inability to evaluate market equilibrium outcomes from small perturbations prevents exhaustive assessment.

Scenario uncertainty analysis can be one method for evaluating the range of decisions of actors in the CCS system. While normative decisions are often required in LCA, scenario analysis provides an approach for considering how results may change given different possible futures [53,37]. By identifying critical parameters within the LCA system as well as in the larger market, scenario analyses can be constructed and corresponding uncertainty assessment performed as a bounding analysis to ask “what if” questions. Furthermore, this approach will help identify future research needs where targeted questions can be identified for particular components that dominate the uncertainty. Ultimately, methods and tools that evaluate market responses and equilibrium outcomes

are needed to rigorously understand how local and remote actors will behave given particular economic signals. This will likely require joint efforts between LCA practitioners, economists, and general equilibrium modelers.

4. Conclusions

The growing global demand for energy services makes it improbable that the large quantity of energy stored underground in fossil fuels will remain unexploited. CCS is increasingly discussed as a potential means to prevent the release into the atmosphere of the carbon in those fuels. The development and deployment of CCS as a significant climate change mitigation strategy would be a major, complex undertaking, and must be supported by appropriate information. Decisions regarding CCS implementation should be informed by robust forecasts of expected costs and benefits including life-cycle environmental trade-offs. The LCA framework can provide crucial information to policy-makers, scientists, and engineers as they develop and deploy CCS systems.

Here we have identified and discussed seven key issues that should be considered by LCA practitioners to ensure that CCS LCA conclusions and recommendations are robust: 1) The energy penalty from capturing and sequestering CO_2 must be considered on a system-wide level. 2) The functional unit of comparison should account for overall demand for energy services. 3) Non-climate environmental impacts may bring unintended consequences when reducing CO_2 emissions. 4) Uncertainties that arise from parameters, models, and scenarios must be identified and managed. 5) Challenges of CCS scale-up, including technological, analytical, and operational issues, must be overcome. 6) Policy-makers require timely and appropriate information on the full consequences of their decisions. 7) The essential role of markets in shaping the form of CCS implementation must be acknowledged.

Addressing these issues is consistent with current trends in LCA that are broadening and deepening the analytical framework to provide more informed decision making [54]. Increasingly, LCA is seen as complementary to other decision support tools such as input-output analysis, material flow analysis, scenario forecasting, and economic analysis [55]. Combining perspectives and integrating knowledge across diverse fields will likely require interdisciplinary cooperation among scientists, engineers, economists, and policy analysts.

LCA should aim to provide holistic information on the energy and environmental implications of CCS deployment at scale, rather than a narrow analysis of technological performance of an individual

power plant. While detailed analysis of specific technologies is an essential part, by itself it is inadequate to fully inform the decision making process. Large-scale CCS systems will involve interactions between many components and actors, and the LCA framework must reflect that complexity if it is to describe the true costs and benefits of CCS deployment.

Acknowledgements

This work was conducted at Lawrence Berkeley National Laboratory under the US Department of Energy Contract No. DE-AC02-05CH11231. The work was funded by the Advanced Research Projects Agency-Energy (ARPA-E), US Department of Energy.

References

[1] International Energy Agency. *Key World Energy Statistics2011*. Accessed 28 October 2011 at http://www.iea.org.

[2] Intergovernmental Panel on Climate Change. *Climate Change 2007: The Physical Science Basis.* Contribution of Working Group I to the Fourth Assessment Report. Accessed 12 August 2011 at http://www.ipcc.ch.

[3] Pacala S, Socolow R. Stabilization wedges: Solving the climate problem for the next 50 years with current technologies. *Science* 2004; 305(5686): 968-72.

[4] International Energy Agency. *Energy Technology Perspectives: Scenarios and Strategies to 2050*. 2010. Accessed 12 August 2011 at http://www.iea.org.

[5] Tsouris C, Aaron DS, Williams KA. Is carbon capture and storage really needed? *Environ Sci Technol* 2010; 44(11): 4042-5.

[6] International Organization for Standardization. *ISO 14044:2006 Environmental Management: Life Cycle Assessment—Requirements and Guidelines*. Geneva: ISO; 2006.

[7] Farrell AE, Plevin RJ, Turner BT, Jones AD, O'Hare M, Kammen DM. Ethanol can contribute to energy and environmental goals. *Science* 2006; 311(5760): 506-8.

[8] Mullins KA, Griffin WS, Matthews HS. Policy implications of uncertainty in modeled life-cycle greenhouse gas emissions of biofuels. *Environ Sci Technol* 2011; 45(1): 132-8.

[9] Viebahn P, Nitsch J, Fischedick M, Esken A, Schüwer D, Supersberger N, et al. Comparison of carbon capture and storage with renewable energy technologies regarding structural, economic, and ecological aspects in Germany. *Int J GHG Control* 2007; 1(1): 121-33.

[10] Koornneef J, van Keulen T, Faaij A, Turkenburg W. Life cycle assessment of a pulverized coal power plant with post-combustion capture, transport and storage of CO_2. *Int J GHG Control* 2008; 2(4): 448-67.

[11] Odeh N, Cockerill T. Life cycle GHG assessment of fossil fuel power plants with carbon capture and storage. *Energy Policy* 2008; 36(1): 367-80.

[12] Pehnt M, Henkel J. Life cycle assessment of carbon dioxide capture and storage from lignite power plants. *Int J GHG Control* 2009; 2(1): 49-66.

[13] Korre A, Nie Z, Durucan S. Life cycle modelling of fossil fuel power generation with post-combustion CO_2 capture. *Int J GHG Control* 2010; 4(2): 289-300.

[14] National Energy Technology Laboratory. *Life Cycle Analysis: Existing Pulverized Coal (EXPC) Power Plant*. Report Number DOE/NETL-403-110809. Morgantown, WV: NETL; 2010.

[15] National Energy Technology Laboratory. *Life Cycle Analysis: Integrated Gasification Combined Cycle (IGCC) Power Plant*. Report Number DOE/NETL-403-110209. Morgantown, WV: NETL; 2010.

[16] National Energy Technology Laboratory. *Life Cycle Analysis: Natural Gas Combined Cycle (NGCC) Power Plant*. Report Number DOE/NETL-403-110509. Morgantown, WV: NETL; 2010.

[17] National Energy Technology Laboratory. *Life Cycle Analysis: Supercritical Pulverized Coal (SCPC) Power Plant*. Report Number DOE/NETL-403-110609. Morgantown, WV: NETL; 2010.

[18] Singh B, Strømman AH, Hertwich E. Life cycle assessment of natural gas combined cycle power plant with post-combustion carbon capture, transport and storage. *Int J GHG Control* 2011; 5(3): 457-66.

[19] House KZ, Harvey CF, Aziz MJ, Schrag DP. The energy penalty of post-combustion CO_2 capture and storage and its implications for retrofitting the U.S. installed base. *Energy Environ Sci* 2009; 2: 193-205.

[20] Schreiber A, Zapp P, Markewitz P, Vögele S. Environmental analysis of a German strategy for carbon capture and storage of coal power plants. *Energy Policy* 2010; 38(12): 7873-83.

[21] Bistline JE, Rai V. The role of carbon capture technologies in greenhouse gas emissions-reduction models: A parametric study for the US power sector. *Energy Policy* 2010; 38(2): 1177-91.

[22] Reap J, Roman F, Duncan S, Bras B. A survey of unresolved problems in life cycle assessment; Part 1: goal and scope and inventory analysis. *Int J LCA* 2008; 13(4): 290-300.

[23] Reap J, Roman F Duncan S, Bras B. A survey of unresolved problems in life cycle assessment; Part 2: impact assessment and interpretation. *Int J LCA* 2008; 13(5): 374-88.

[24] Weisser D. A guide to life-cycle greenhouse gas (GHG) emissions from electric supply technologies. *Energy* 2007; 32(9): 1543-59.

[25] Intergovernmental Panel on Climate Change. *Special Report on Carbon Dioxide Capture and Storage*. 2005. Accessed 12 August 2011 at http://www.ipcc.ch.

[26] International Energy Agency Greenhouse Gas R&D Programme. *Updating the IEA GHG Global CO_2 Emissions Database: Developments since 2002.* 2006. Accessed 12 August 2011 at http://www.isdemo5.co.uk.

[27] International Energy Agency Greenhouse Gas R&D Programme. *IEA-GHG CO_2 Emissions Database v.2006*. Updated January 2008. 2008.

[28] Aaron D, Tsouris C. Separation of CO_2 from flue gas: A review. *Sep Sci Technol* 2005; 40(1-3): 321-48.

[29] D'Alessandro DM, Smit B, Long JR. Carbon dioxide capture: Prospects for new materials. *Angew Chem Int Ed* 2010; 49(35): 6058-82.

[30] National Energy Technology Laboratory. *Carbon Sequestration Atlas of the United States and Canada*. Third Edition. 2010. Accessed 12 August 2011 at http://www.netl.doe.gov.

[31] Lindeberg E, Vuillaume J-F, Ghaderi A. Determination of the CO_2 storage capacity of the Utsira formation. *Energy Procedia* 2009; 1(1): 2777-84.

[32] Sathre R, Cain J, Chester M, Masanet E. The role of Life Cycle Assessment in identifying and reducing environmental impacts of CCS. In: *Proceedings of the 10th Annual Conference on Carbon Capture and Sequestration*, Pittsburgh, Pennsylvania. 2011.

[33] Page SC, Williamson AG, Mason IG. Carbon capture and storage: Fundamental thermodynamics and current technology. *Energy Policy* 2009; 37(9): 3314-24.

[34] Jaramillo P, Griffin WM, McCoy ST. Life cycle inventory of CO_2 in an enhanced oil recovery system. *Environ Sci Technol* 2009; 43(21): 8027-32.

[35] Siirila ER, Navarre-Sitchler AK, Maxwell RM, McCray JE. A quantitative methodology to assess the risks to human health from CO_2 leakage into groundwater. *Adv Water Res* 2011; 36: 146-164.

[36] Veltman K, Singh B, Hertwich EG. Human and environmental impact assessment of postcombustion CO_2 capture focusing on emissions from amine-based scrubbing solvents to air. *Environ Sci Technol* 2010; 44(4): 1496-502.

[37] Huijbregts MAJ, Gilijamse W, Ragas AMJ, Reijnders L. Evaluating uncertainty in environmental life-cycle assessment: A case study comparing two insulation options for a Dutch one-family dwelling. *Environ Sci Technol* 2003; 37(11): 2600-8.

[38] Karl M, Wright RF, Berglen TF, Denby B. Worst case scenario study to assess the environmental impact of amine emissions from a CO_2 capture plant. *Int J GHG Control* 2011; 5(3): 439-47.

[39] Wernet G, Papadokonstantakis S, Hellweg S, Hungerbűhler K. Bridging data gaps in environmental assessments: Modeling impacts of fine and basic chemical production. *Green Chem* 2009; 11: 1826-31.

[40] Levasseur A, Lesage P, Margni M, Deschênes L, Samson R. Considering time in LCA: Dynamic LCA and its application to global warming impact assessments. *Environ Sci Technol* 2010; 44(8): 3169-74.

[41] Hellweg S, Hofstetter TB, Hungerbühler K. Discounting and the environment: Should current impacts be weighted differently than impacts harming future generation? *Int J LCA* 2003; 8(1): 8-18.

[42] Plevin RJ, O'Hare M, Jones AD, Torn MS, Gibbs HK. Greenhouse gas emissions from biofuels' indirect land use change are uncertain but may be much greater than previously estimated. *Environ Sci Technol* 2010; 44(21): 8015-21.

[43] Herzog HJ. Scaling up carbon dioxide capture and storage: From megatons to gigatons. *Energy Economics* 2011; 33(4): 597-604.

[44] Bisio A, Kabel RL. *Scaleup of Chemical Processes*. New York: John Wiley & Sons Inc; 1985.

[45] Rai V, Victor DG, Thurber MC. Carbon capture and storage at scale: Lessons from the growth of analogous energy technologies. *Energy Policy* 2010; 38(8): 4089-98.

[46] Hawkes AD. Estimating marginal CO_2 emissions rates for national electricity systems. *Energy Policy* 2010; 38(10): 5977-87.

[47] Andersson BA, Azar C, Holmberg J, Karlsson S. Material constraints for thin-film solar cells. *Energy* 1998; 23(5): 407-11.

[48] Kleijn R, van der Voet E, Kramer GJ, van Oers L, van der Giesen C. Metal requirements of low-carbon power generation. *Energy* 2011; 36(6): 5640-8.

[49] Terwel BW, Harinck F, Ellemers N, Daamen DDL. Going beyond the properties of CO_2 capture and storage (CCS) technology: How trust in stakeholders affects public acceptance of CCS. *Int J GHG Control* 2011; 5(2): 181-8.

[50] Tillman A-M. Significance of decision-making for LCA methodology. *Environ Impact Assess Rev* 2000; 20(1): 113-23.

[51] Searchinger T, Heimlich R, Houghton RA, Dong F, Elobeid A, Fabiosa J, et al. Use of U.S. croplands for biofuels increases greenhouse gases through emissions from land-use change. *Science* 2008; 319(5867): 1238-40.

[52] Lemoine DM, Plevin RJ, Cohn AS, Jones AD, Brandt AR, Vergara SE, et al. The climate impacts of bioenergy systems depend on market and regulatory policy contexts. *Environ Sci Technol* 2010; 44(19): 7347-50.

[53] Pesonen H, Ekvall T, Fleischer G, Huppes G, Jahn C, Klos Z, et al. Framework for scenario development in LCA. *Int J LCA* 2000; 5(1): 21-30.

[54] Guinée JB, Heijungs R, Huppes G, Zamaga A, Masoni P, Buonamici R, et al. Life cycle assessment: Past, present, and future. *Environ Sci Technol* 2011; 45(1): 90-6.

[55] Weidema BP. Stepping stones from life cycle assessment to adjacent assessment techniques. *J Ind Ecol* 2011; 15(5): 658-61.