UPDATE ON THE MODIFICATION AND TESTING OF THE MICE SUPERCONDUCTING SPECTROMETER SOLENOIDS*

S.P. Virostek#, M.A. Green, N.Y. Li, T. Niinikoski, H. Pan, S. Prestemon and M.S. Zisman
Lawrence Berkeley National Laboratory, Berkeley CA 94720, USA

Abstract

The Muon Ionization Cooling Experiment (MICE) is an international effort, sited at Rutherford Appleton Laboratory, that will demonstrate ionization cooling in a segment of a realistic cooling channel using a muon beam. A pair of identical, 3-m long spectrometer solenoids will provide a 4-tesla uniform field region at each end of the cooling channel. The emittance of the beam as it enters and exits the cooling channel will be measured within the 400 mm diameter magnet bores. The magnets incorporate a three-coil spectrometer magnet section and a two-coil section that matches the solenoid uniform field into the MICE cooling channel. The cold mass, radiation shield and leads are kept cold by means of a series of two-stage cryocoolers and one single-stage cryocooler. Previous testing of the magnets had revealed several operational issues related to heat leak and quench protection. A quench analysis using Vector Fields software and detailed heat leak calculations have been carried out in order to assess and improve the magnet design. Detailed analyses of the eddy currents, temperature distribution and stresses in a modified radiation shield design have been carried out as well. Details of the analyses and resulting magnet design modifications, along with an update of the magnet assembly progress, will be presented here.

INTRODUCTION

The cooling channel portion of the Muon Ionization Cooling Experiment (MICE) [1] will consist of the following components: three absorber focus-coil (AFC) modules [2], each containing two superconducting focusing coils and a liquid-hydrogen absorber, which performs muon ionization cooling to reduce the beam emittance; two RF and coupling-coil (RFCC) modules [3], each of which contain a central superconducting solenoid and four 201 MHz normal-conducting RF cavities to re-accelerate the beam. The spectrometer solenoid modules are located at either end of the cooling channel. A CAD image of the MICE cooling channel with the spectrometer solenoids in place is provided in Fig. 1. Each spectrometer solenoid consists of five superconducting coils wound on a common 2923 mm long aluminum mandrel. The tracker detector located in the bore of the three spectrometer coils is made up of five planes of scintillating fibers, which are used to measure the emittance of the muons as they enter and exit the cooling channel.

*This work was supported by the Office of Science, U.S. Department of Energy under DOE contract number DE-AC02-05CH11231.
#spvirostek@lbl.gov

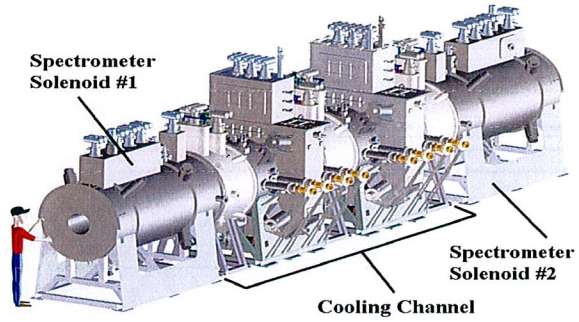

Figure 1: MICE cooling channel 3D CAD image.

A CAD image of a single spectrometer solenoid module that reflects recent changes to the cryocooling scheme is shown in Fig. 2. A photo of the magnet cold mass after coil winding and before the cover was welded on is provided in Fig. 3.

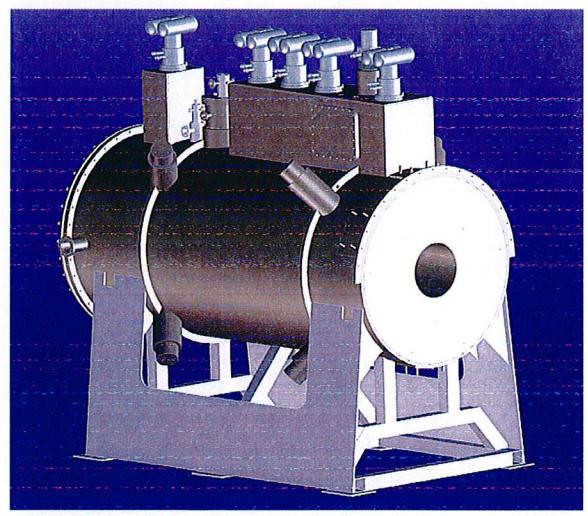

Figure 2: Spectrometer solenoid 3D CAD image.

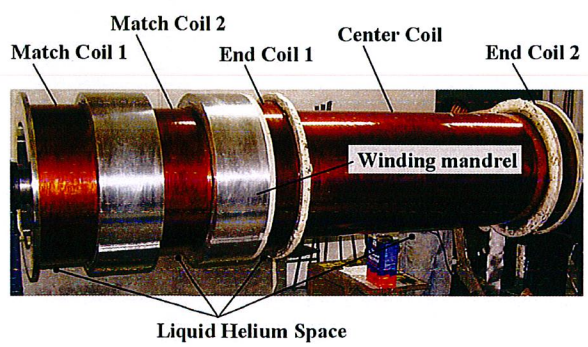

Figure 3: Spectrometer solenoid cold mass assembly.

Match Coil 1 and Match Coil 2 operate as a focusing doublet to match the beam in the spectrometer solenoid to the beam in the adjacent AFC modules. The spectrometer portion of the module, consisting of End Coil 1, the Center Coil and End Coil 2 will generate a 4-tesla uniform field ($\Delta B/B < 3\times10^{-3}$) over a 1-meter-long and 0.3-meter-diameter volume. Additional details of the spectrometer solenoid design and operating parameters have been presented previously [4].

Several issues arose during the most recent testing and training of one of the spectrometer solenoids that resulted in the need to disassemble the magnet and to carry out detailed analyses and a review of the existing design [5,6]. The primary areas needing attention were the protection of the magnet leads during a quench and excessive heat leak to the magnet cold mass. Details of the design modifications being implemented and of the analyses that were carried out are presented here.

MAGNET MODIFICATIONS

The spectrometer solenoid uses a series of cryocoolers to provide cooling for the cold mass and radiation shield. The most recent version of the magnet tested used three Cryomech PT-415 two-stage cryocoolers to re-condense the LHe in the cold mass and to maintain the temperature of the 70K radiation shield. Each of these coolers provides 1.5 watts of cooling power at 4K. An additional single-stage cooler provided direct cooling of the upper end of the HTS lead area.

In order to address the issues with the original design of the magnets, a series of design and assembly modifications are currently being implemented. These modifications include the following: improvement of the connection between the first stage of the cryocoolers and the radiation shield, increase of the thermal conductivity of the radiation shield, reduction of direct shine to the cold mass through the fill and vent lines by using baffles, and improvement of the production and application of MLI blankets. Through these and other improvements to the system, the total heat load on the cold mass has been calculated to be less than 4 watts. Two additional pulse-tube cryocoolers are being added to each magnet to obtain adequate thermal margin by providing 7.5 watts of total cooling power at 4K.

After the most recent series of magnet training runs, the cold mass cover was partially removed in order to repair a cold lead that failed just inside the feedthrough. Inspection of the inside of the cold mass revealed thermal damage to six of the nine resistors used in the passive quench protection system. The resistors overheated and buckled and caused localized charring of an adjacent G-10 insulating sheet. The quench resistors are included in the analysis that is described later in this paper. It appears that the resistors absorbed more energy than expected due to the lead burnout, so a design for conduction cooling of the resistors is being implemented to prevent the possibility of overheating in the future. The scheme uses an insulated copper clamping plate that is thermally connected to the cold mass mandrel. An off-line test of the conduction cooling system was carried out prior to implementing the design in the actual magnet cold mass (see Fig. 4).

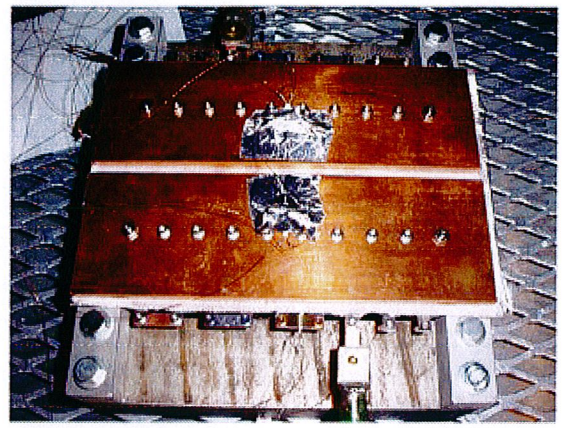

Figure 4: Test of the resistor conductive cooling scheme.

QUENCH AND SHIELD ANALYSES

The spectrometer solenoid design incorporates a series of diodes and resistors within the cold mass to function as a passive quench protection system. As part of the overall assessment of the magnet design, the suitability of the passive magnet protection system has been reviewed and analyzed considering various operational regimes to verify to what degree the design can safely protect the system under reasonable fault scenarios. The final analyses have been carried out using the Opera-3D modeler with the QUENCH module [7]. The 3D quench analysis model is shown in Fig. 5.

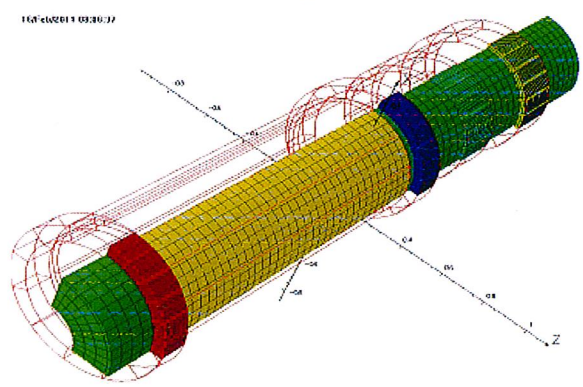

Figure 5: 3D quench analysis model.

A systematic analysis of quench scenarios has been performed to validate the general magnet design in terms of hot-spot temperatures, internal voltages, and the role and reliability of quenchback propagating quenches through the spectrometer solenoid coils. Under normal operating conditions, the magnet protection system is found to function correctly, with any one coil quench resulting in a sequence of coil quenches that largely deposit the stored magnetic energy in the coils in the form of heat, with hot-spot temperatures of 130K or less.

Furthermore, the internal voltages are acceptable, with adequate turn, layer, and ground insulation in the coil.

A modification to the external circuit design is being developed to protect the HTS leads. The design requires detection of increased voltage drop across the leads and the active triggering of an external switch. By appropriate selection of the external resistance, the circuit will significantly reduce the current through the HTS leads and protect them from burn-out.

One of the magnet modifications was to change the radiation shield material from 6061 aluminum to 1100 aluminum to increase the thermal conductivity. A series of analyses of the shield was carried out in order to determine the magnitude of eddy currents during a quench as well as the corresponding forces, displacements and stresses. Fig. 6 shows the Vector Fields model used in the analysis with the direction of the eddy currents indicated by the arrows. The model was used to establish the locations of electrical breaks in the shield body.

An ANSYS model of the shield was also developed in order to predict the shield stresses and displacements due to shipping (see Fig. 7). The same ANSYS model was also used to predict the steady-state temperature distribution in the shield subject to the estimated heat loads (see Fig. 8).

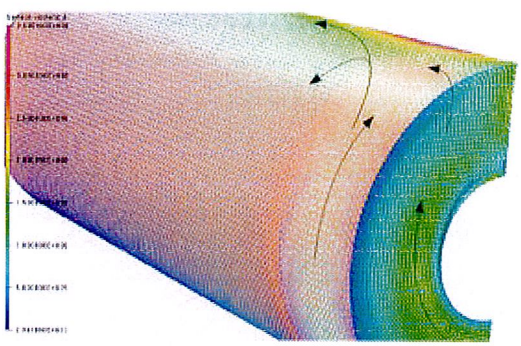

Figure 6: Radiation shield eddy current analysis.

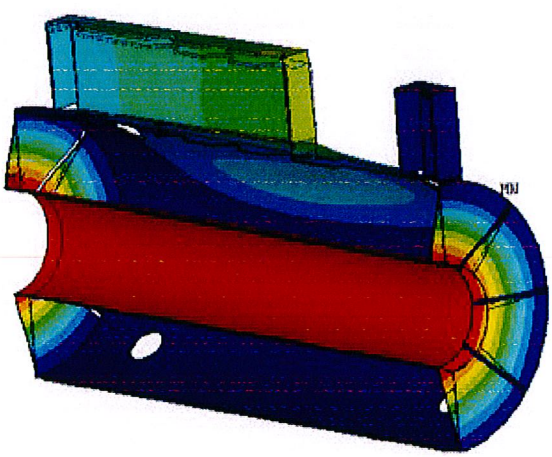

Figure 7: Radiation shield displacements during shipping.

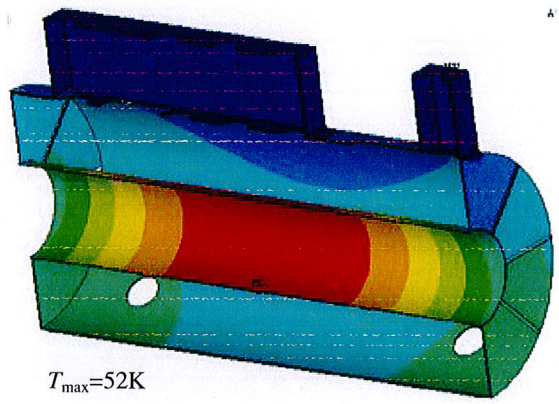

Figure 8: Radiation shield temperature distribution.

SUMMARY

The magnet quench analysis has been completed, and a final design has been developed. The thermal analysis of the spectrometer solenoids has resulted in a series of design modifications that will reduce the heat leak into the cold mass while increasing the total amount of cryocooling power. The reassembly of the first of the two magnets is currently under way.

ACKNOWLEDGMENTS

The authors would like to acknowledge the design and fabrication efforts of our subcontracted magnet vendor, Wang NMR, Inc. of Livermore, CA. The development of the initial design concepts and detailed review by Pasquale Fabbricatore of INFN is acknowledged as well.

REFERENCES

[1] G. Gregoire *et al.*, "MICE and International Muon Ionization Cooling Experiment Technical Reference Document"

[2] M. A. Green *et al.*, "The Mechanical and Thermal Design for the MICE Focusing Solenoid Magnet System," IEEE Transactions on Applied Superconductivity **15**, No. 2, p. 1259, 2005.

[3] M. A. Green *et al.*, "The Mechanical and Thermal Design for the MICE Coupling Solenoid Magnet," IEEE Transactions on Applied Superconductivity **15**, No. 2, p. 1279, 2005.

[4] S. Virostek *et al.*, "Progress on the Fabrication and Testing of the MICE Spectrometer Solenoids," PAC09, Vancouver, Canada.

[5] S. Virostek *et al.*, "Fabrication, Testing and Modeling of the MICE Superconducting Spectrometer Solenoids," IPAC10, Kyoto, Japan.

[6] S. Virostek *et al.*, "Progress on the Modeling and Modification of the MICE Superconducting Spectrometer Solenoids," PAC11, New York, NY.

[7] Cobham Technical Services, Vector Fields Software.

This document was prepared as an account of work sponsored by the United States Government. While this document is believed to contain correct information, neither the United States Government nor any agency thereof, nor The Regents of the University of California, nor any of their employees, makes any warranty, express or implied, or assumes any legal responsibility for the accuracy, completeness, or usefulness of any information, apparatus, product, or process disclosed, or represents that its use would not infringe privately owned rights. Reference herein to any specific commercial product, process, or service by its trade name, trademark, manufacturer, or otherwise, does not necessarily constitute or imply its endorsement, recommendation, or favoring by the United States Government or any agency thereof, or The Regents of the University of California. The views and opinions of authors expressed herein do not necessarily state or reflect those of the United States Government or any agency thereof or The Regents of the University of California.

This work was supported by the Director, Office of Science, Office of Fusion Energy Sciences, of the U.S. Department of Energy under Contract No. DE-AC02-05CH11231.