PROGRESS ON MICE RFCC MODULE FOR THE MICE EXPERIMENT*

Allan DeMello, Nord Andresen, Michael Green, Derun Li, Heng Pan, Steve Virostek, Michael Zisman (LBNL, Berkeley CA 94720, USA),
Don Summers, Mike Reep (University of Mississippi, Oxford MS 38677, USA)
An Bin Chen, Xiao-Kun Liu, Feng-Yu Xu, Shi-Xian Zheng (HIT, Harbin, China),
Yun Cao, Sen Sun, Li Wang, Lixin Yin (SINAP, Shanghai, China)

Abstract

We describe the recent progress on the design and fabrication of the RFCC (RF and Coupling Coil) module for the international Muon Ionization Cooling Experiment (MICE). The MICE cooling channel has two RFCC modules; each has four 201-MHz normal conducting RF cavities and one superconducting solenoid magnet. The magnet is designed to be cooled by three cryocoolers. Fabrication of the RF cavities is complete; design and fabrication of the magnets are in progress. The first magnet is expected to be finished by the end of 2011.

INTRODUCTION

MICE is an international experiment designed to demonstrate muon beam cooling using ionization cooling (Fig. 1). Muons are captured in a strong magnetic field, "cooled" in 4D phase space and re-accelerated in the beamline direction by the normal conducting RF cavities in the RFCC. This demonstration is key to the success of a future Neutrino Factory or Muon Collider. The experiment is being hosted at Rutherford Appleton Laboratory (RAL) in the UK, where beamline commissioning is underway. Institutions participating in the collaboration include national laboratories and universities in Europe, the U.S., China, and Japan.

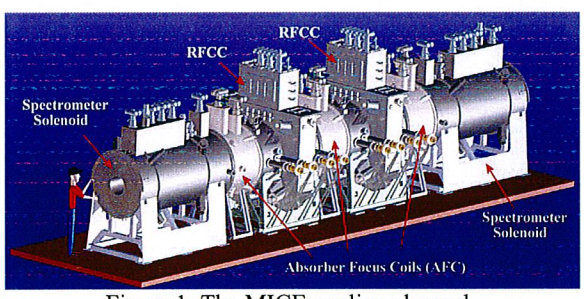

Figure 1: The MICE cooling channel.

RFCC MODULE CAVITIES

Lawrence Berkeley National Laboratory is responsible for the design of the RF Cavity and Coupling Coil (RFCC) module for MICE (Fig. 2). Each RFCC module will contain four 201 MHz normal conducting RF cavities and one superconducting coupling coil magnet [4].

Each cavity will have its frequency actively tuned using six stainless steel flexure tuners moved with a dual action pneumatic actuator (Fig. 3). Six flexure tuners are currently being fabricated (University of Mississippi) for a full cavity test of the RF tuner system. This test will include the electronic pressure control, EPICS software interface and the RF feedback system. This system will be assembled into a single cavity vacuum vessel (see below) for testing.

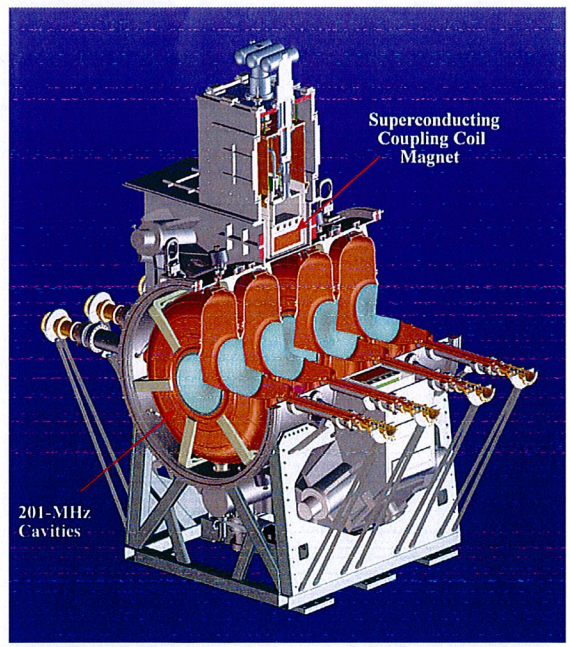

Figure 2: 90° sectioned view of the MICE cooling channel RFCC module.

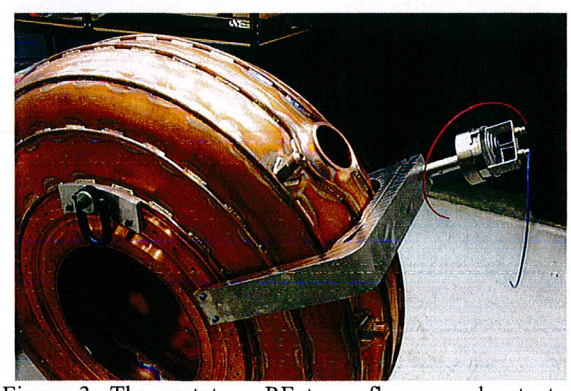

Figure 3: The prototype RF tuner flexure and actuator mounted on a 201-MHz cavity.

* This work was supported by the Office of Science, U.S. Department of Energy under DOE contract number DE-AC02-05CH11231.

COUPLING COIL

The coupling coil magnet consists of a single coil wound on a forged aluminum mandrel, a copper and aluminum thermal radiation shield and a stainless steel cryostat vacuum vessel (Fig. 4). Cooling of the radiation shield and cold mass is provided by three two-stage cryocoolers. Liquid helium is maintained in aluminum tubes welded to the cold mass by means of a re-condensation circuit [5].

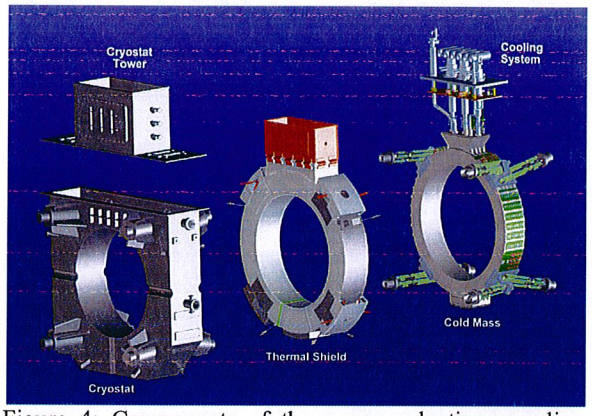

Figure 4: Components of the superconducting coupling coil magnet.

The first magnet coil winding has been finished including the aluminum banding over the superconductor (Fig. 5). The first of three magnets will be used for the MuCool experiment at Fermilab with the second and third magnets going to the MICE project. The second and third forged bobbins have been fabricated as well as three cover plates to complete the cold mass.

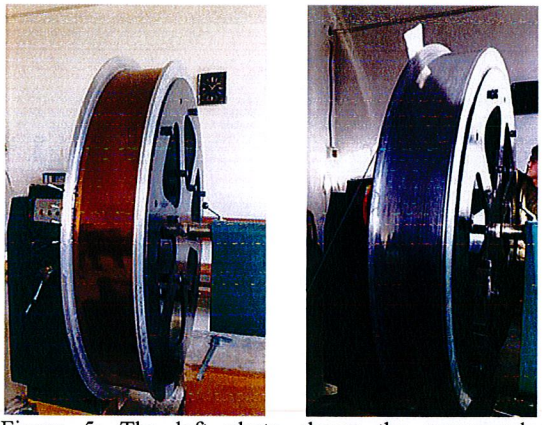

Figure 5: The left photo shows the superconductor winding complete. The right photo shows the aluminum banding wound over the superconductor.

The magnet cryostat is designed to be integrated with the vacuum vessel housing the four RF cavities. The cryostat has been redesigned to improve the ease of assembling the magnet [3]. The cold mass will be assembled by lowering it into the cryostat from the top. The cryostat has also been widened by 20 mm per side to increase the gap between the RF coupler cutouts and the thermal shield. This will provide more room for the application of the multi-layer insulation material and reduce the possibility of a heat leak in this area.

The coupling coil cooling system has also been improved [1, 2] with the addition of a third cryocooler and a new helium fill line system (Fig. 6). The initial fill will be directed to the bottom reservoir of the cold mass and the fill line will also allow for "top off", if necessary, into the top reservoir.

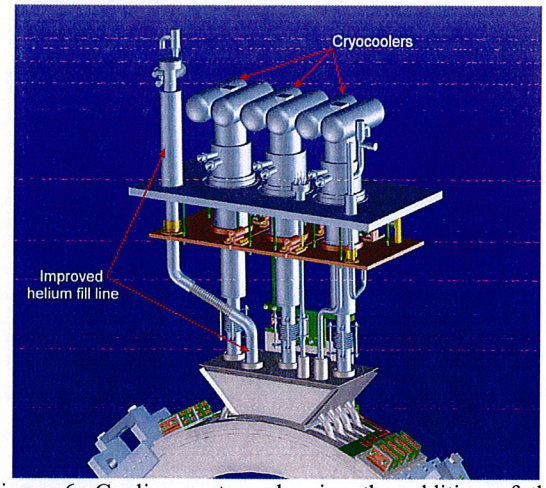

Figure 6: Cooling system showing the addition of the third cryocooler and improved helium fill line.

The removable top tower assembly of the cryostat and openings near the bottom will provide access to the cold mass for transferring coil physical center fiducial information to the outside of the coupling coil cryostat.

SINGLE CAVITY VACUUM VESSEL

A single RF cavity vacuum vessel has been designed and the fabrication drawings are complete (Fig. 7). The drawing package will be sent out for fabrication quotes in early April. This vessel will give us the opportunity to test several aspects of the RFCC module vacuum vessel assembly before we receive the coupling coil magnets. This will include a check of the engineering and mechanical design.

We will test the RF tuning system with 6 tuners and actuators on a cavity to verify the frequency tuning range and the EPICS software control system. We will also be able to obtain experience with the assembly procedures and have an opportunity to design fixturing for installing the RF cavity into the vacuum vessel prior to installing cavities into the MICE RFCC. Installing the cavity also includes mounting the beryllium windows and the RF tuners onto the cavity, aligning the cavity with the hexapod arrangement of support struts, mounting the tuner actuators (through the vacuum vessel) into the flexure tuner, completing the cavity water cooling tubing connections to the air side of the vessel and finally connecting the RF couplers to the cavity.

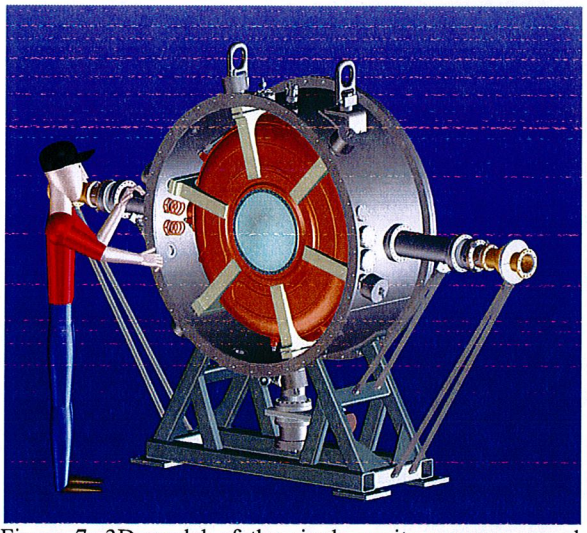

Figure 7: 3D model of the single cavity vacuum vessel with the front cover removed.

CONCLUSION

The cavity fabrication is complete; all 10 cavities have been delivered to LBNL. Mechanical polish and electropolish of the inside of the cavities will be done by the end of 2011.

Design and fabrication of the coupling coil magnet is proceeding well. Qi Huan Corporation in Beijing, China has completed the winding and banding of the first superconducting coil. They have already fabricated the coil bobbins for the remaining two coils and also finished three cover plates to complete the cold mass assemblies. The cryostat drawings are complete and fabrication of the parts will begin soon. The cooling system design is complete and the drawings are near completion. Preparations for testing of 6 RF tuner and actuator assemblies on a cavity are ongoing. We expect to have the single vacuum vessel cavity fabricated and the test of the RF tuner system finished by the end of 2011.

REFERENCES

[1] L. Wang, "Calculations and FEA simulations for MICE/ MuCool Coupling Magnet Cryostat Design," Review at SINAP/Shanghai, 2010

[2] S. Sun, "Mechanical Design for Coupling Magnet Cooling System," Review at SINAP/Shanghai, 2010

[3] Y. Cao, "Coupling Magnet Cryostat Mechanical Structure Design and Manufacture," Review at SINAP/Shanghai, 2010

[4] D. Li, et al., "Progress on the RF Coupling Coil Module Design for the MICE Channel," PAC-05 Paper WPAE-045, 2005

[5] S.P. Virostek, et al., "Fabrication, Testing and Modeling of the MICE Superconducting Spectrometer Solenoids," IPAC '10, Kyoto, Japan

This document was prepared as an account of work sponsored by the United States Government. While this document is believed to contain correct information, neither the United States Government nor any agency thereof, nor The Regents of the University of California, nor any of their employees, makes any warranty, express or implied, or assumes any legal responsibility for the accuracy, completeness, or usefulness of any information, apparatus, product, or process disclosed, or represents that its use would not infringe privately owned rights. Reference herein to any specific commercial product, process, or service by its trade name, trademark, manufacturer, or otherwise, does not necessarily constitute or imply its endorsement, recommendation, or favoring by the United States Government or any agency thereof, or The Regents of the University of California. The views and opinions of authors expressed herein do not necessarily state or reflect those of the United States Government or any agency thereof or The Regents of the University of California.

This work was supported by the Director, Office of Science, Office of Fusion Energy Sciences, of the U.S. Department of Energy under Contract No. DE-AC02-05CH11231.