LBL-12248
Preprint c.2

Lawrence Berkeley Laboratory
UNIVERSITY OF CALIFORNIA

RECEIVED
LAWRENCE
BERKELEY LABORATORY
JUN 5 1981
LIBRARY AND
DOCUMENTS SECTION

ENERGY & ENVIRONMENT DIVISION

To be published in Lighting Design and Application

QUICKLITE 1: A DAYLIGHTING PROGRAM FOR THE TI-59 CALCULATOR

Harvey Bryan, Robert Clear, James Rosen, and Stephen Selkowitz

April 1981

TWO-WEEK LOAN COPY

This is a Library Circulating Copy which may be borrowed for two weeks. For a personal retention copy, call Tech. Info. Division, Ext. 6782

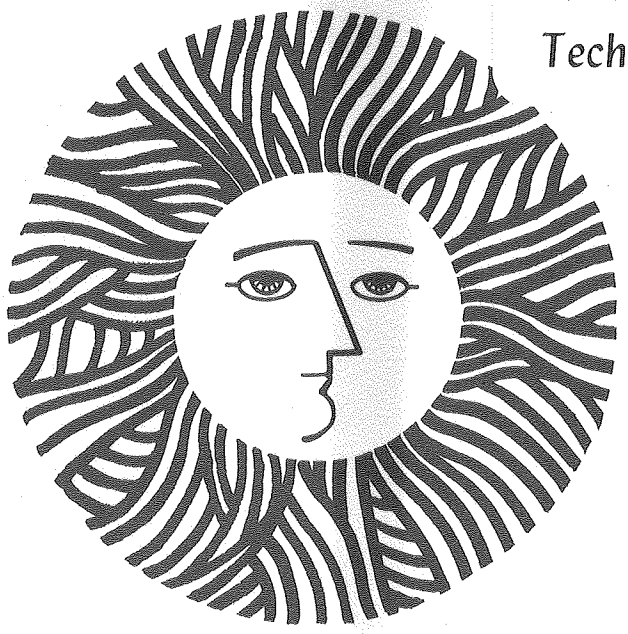

LBL-12248 c.2

Prepared for the U.S. Department of Energy under Contract W-7405-ENG-48

DISCLAIMER

This document was prepared as an account of work sponsored by the United States Government. While this document is believed to contain correct information, neither the United States Government nor any agency thereof, nor the Regents of the University of California, nor any of their employees, makes any warranty, express or implied, or assumes any legal responsibility for the accuracy, completeness, or usefulness of any information, apparatus, product, or process disclosed, or represents that its use would not infringe privately owned rights. Reference herein to any specific commercial product, process, or service by its trade name, trademark, manufacturer, or otherwise, does not necessarily constitute or imply its endorsement, recommendation, or favoring by the United States Government or any agency thereof, or the Regents of the University of California. The views and opinions of authors expressed herein do not necessarily state or reflect those of the United States Government or any agency thereof or the Regents of the University of California.

LBL-12248
W-80
EEB-W-81-01

To be Published in Lighting Design and Application

QUICKLITE 1:

A DAYLIGHTING PROGRAM

FOR THE TI-59 CALCULATOR

Harvey Bryan**
Robert Clear*
James Rosen**
Stephen Selkowitz*

April 1981

*Lawrence Berkeley Laboratory
University of California
Berkeley, California 94720

**Department of Architecture
Massachusetts Institute of Technology
Cambridge, Massachusetts 02139

The work described in this paper was funded by the Assistant Secretary for Conservation and Solar Energy, Office of Buildings and Community Systems, Buildings Division of the U.S. Department of Energy under Contract No. W-7405-ENG-48.

This manuscript was printed from originals provided by the author.

QuickLite I

ABSTRACT

This paper presents a set of daylighting programs that can be run on a TI-59 hand calculator. The paper gives the program listings, the step-by-step procedures for using the programs, worksheets, and a worked sample problem.

The programs calculate interior horizontal illumination levels or daylight factors from a window. The user can specify the location of the calculation point, or, if a printer is available, the locations of a grid of points. Calculations can be performed for both CIE clear and overcast sky conditions.

The direct sky component calculation uses Rivero's approximation for window transmission. The interreflected component calculation uses a split-flux approximation.

INTRODUCTION

Daylighting is now considered one of the most promising energy conservation strategies for nonresidential buildings. Although substantial savings in both electrical energy and peak power demand are possible, potential savings may not be achieved given the present state of daylighting design procedures. A major obstacle to the effective utilization of daylighting is the lack of accurate and simple procedures for daylighting design and analysis.

Three types of design tools have been used to predict interior daylight illumination: scale models, graphic techniques, and calculations. A detailed discussion of the strengths and limitations of each is beyond the scope of this paper; we focus here on computational approaches.

Calculations can provide a fast and accurate assessment of illumination levels for typical room and glazing design. Present procedures for calculating daylight illumination can be divided into two categories: simplified procedures, which often make simplifications and assumptions that may reduce flexibility and accuracy, and large-scale computer programs, which, although they may be more flexible and accurate, require the preparation of detailed input data and access to computers or time-sharing computer facilities. There is a need for a calculation procedure that combines the speed, low cost, and ease of the simplified methods with the flexibility and accuracy of the large computer models.

This paper describes a calculation procedure, using a programmable hand calculator, that is a major step toward that goal.

QUICKLITE 1 PROGRAM DESCRIPTION

Quicklite 1 will predict daylight illumination at any point within a room. The methodology and algorithms used in the development of this program are documented in a previous paper.[1] Further details and additional program capabilities will be described in a later publication.[2]

The program utilizes the CIE sky luminance distribution functions

for the overcast and clear skies.[3,4] The light reaching the interior point being considered is separated into two components. Light arriving directly from the sky (Sky Component or SC) is calculated using a source area formula. Light reflected from external and internal surfaces (Reflected Component or RC) is calculated using the split flux approach. The total for these two components is given as either the daylight factor (the ratio of illumination at the reference point to illumination on a horizontal surface from the unobstructed sky) or illumination (in footcandles) for the point(s) being considered. This paper describes the use of the program to calculate daylight illumination for a simple window without obstructions or sun-control devices. The program can also be used to solve more complex daylighting problems; however, the length of this paper limits their inclusion. Solutions to these problems are described in reference 2.

Quicklite 1 has been designed to be accurate, simple, and relatively fast-running. The output compares well with other daylighting calculation procedures as well as with a series of physical scale-model measurements. However, it must be remembered that no calculation procedure, no matter how accurate, can duplicate all the complexities that daylighting poses. In most cases we seek comparative performance levels rather than absolute quantitative results. We must also remember that the non-quantifiable aspects of lighting design are equally important and that nothing can substitute for good design judgment.

I: SKY COMPONENT PROGRAM: This program uses the TI-59's master library. If multiple point calculations are desired for a single program execution, the PC-100 printer must be used.

Step 1: Repartition the calculator memory by entering 5 and then pressing 2nd OP 17.

Step 2: Determine if sky condition is clear or overcast, then read appropriate program into calculator. The clear sky program will require reading sides 1, 2, and 3, while the overcast sky program requires reading only sides 1 and 2.

Step 3: a) Enter window transmission at normal incidence (90° to the plane of the window).

NOTE: Steps (3b-3e) should be executed only for the clear sky program.

b) Enter the normalization factor (N_{sc}) which is the ratio of illumination on a horizontal plane to the luminance at the zenith. This factor is a function of solar altitude and is given as follows:

Solar Altitude	N_{sc}
10°	3.654
20°	3.565
30°	3.235
40°	2.741
50°	2.178
60°	1.632
70°	1.159
80°	0.782
90°	0.503

c) Enter window azimuth angle (in degrees), which is the angle that a line normal to a vertical window makes with south (which is taken to be 0°). Clockwise rotation from south is measured as positive while counter-clockwise rotation is measured as negative. (See Figure 1)

d) Enter solar azimuth angle (in degrees), which is the azimuthal angle of the sun from south. Here again clockwise rotation from south is measured as positive while counter-clockwise rotation is measured as negative. (See Figure 1)

NOTE: This program does not compute the effect of direct sun in the room. There will be direct sun at some point in the room for an obstructed window if the absolute value of the difference between the window azimuth and solar azimuth is less than 90°.

e) Enter solar altitude (in degrees from horizontal). (See Figure 1.)

Step 4: Enter the location and size of the window and the workplane height at which illumination is to be calculated. A rectangular coordinate system is used to locate the window as well as the calculation point(s) (see Figure 2). The origin of this coordinate system should be placed at the lower left-hand corner of the window-wall's interior face. When facing the window from the interior of the room, the X-axis will run along the floor perpendicular to the window-wall. The Y-axis will run to the right, along the intersection of the floor and the window-wall. The Z-axis will point straight up. The location and size of the window is described by four values: Y_{left} and Y_{right} represent the respective distances of the left- and right-hand sides of the window from the Z-axis, Z_{bottom} and Z_{top} represent the respective distances of the bottom and top of the window from the floor. Finally, the height of the calculation point(s) above the floor (Z_p) must be determined. For most office tasks Z_p is assumed to be 2.5 feet. Figure 2 illustrates these relationships.

Step 5: Determine if the output is to be calculated in units of daylight factor or illumination. To calculate the daylight factor, the number 1 must be stored in register 35. To calculate illumination, the appropriate horizontal illumination from the sky (E_{sky}) must be stored in register 35. This value can be found in Figure 36A, B, C, or D in the IES Recommended Practice of Daylighting,[5] in reference 2, or can be taken from any other source of measured or calculated illumination data.

NOTE: To calculate values for a single point, proceed to steps 6a and 7a. If a printer is available, multiple points on a rectangular grid may be calculated and printed by proceeding to steps 6b and 7b.

Single Point Procedure:

Step 6a: Enter the location of the point at which the daylight factor or illumination calculation is to be made. Y_p is the distance from the measurement point to the wall to the left of the window. X_p is the distance from the measurement point to the window-wall. (See Figure 2)

Step 7a: Calculate the sky component by pressing 2nd B'.

Multiple Point Procedure:

Step 6b: Enter the corner locations of the rectangular grid of calculation points. Y_{min} and Y_{max} are, respectively, the distances from the wall at the left of the window to the closest and the farthest columns of calculation points. X_{min} and X_{max} are, respectively, the distances from the window-wall to the closest and the farthest rows of calculation points. (See Figure 2) Finally, the number of calculation points for the Y-column (N_y), and X-row (N_x), must be determined. N_y and N_x include the corner points and thus must be greater than or equal to two. Setting N_y or N_x to one will result in a "divide by zero" error.

Step 7b: Calculate the sky component values by pressing 2nd D'. Run time for this option is approximately 1.2 minutes per point for overcast sky and 3 minutes per point for the clear sky.

General Notes: Sky Component Program

1) It is unnecessary to re-enter all the input data for repeated calculations. Only those input values entered in step 6a or 6b must be re-entered to rerun the program. All other input values need to be changed only if their new values differ from those used in the previous run.

2) All inputs that relate to distance (such as width of the window) may be entered in any unit, English or metric, so long as the user is consistent.

3) If a printer is being used, it is highly advisable to make a list of the register contents before running the program. To obtain a permanent list of the data registers, enter 30 and then press INV LST before executing step 7a or 7b. (For register assignments see Figure 6.)

4) Figure 4 summarizes the steps required to enter and run the Sky Component program.

REFLECTED COMPONENT PROGRAM: This program uses the TI-59's master library. The PC-100 printer is optional.

Step 1: Repartition the calculator memory by entering 3 and then pressing 2nd OP 17.

Step 2: The reflected component requires reading sides 1 and 2.

Step 3: Enter window width and height.

Step 4: Enter room width, depth, and height plus the height of the window sill above the floor.

Step 5: Enter normal incidence window transmission.

Step 6: Enter reflectance of ceiling, floor, glass and walls as well as exterior ground.

NOTE: There are four options for output from this program. The appropriate option must be chosen from steps 7a, b, c, or d.

Step 7a: To calculate the daylight factor from the reflected component under an overcast sky, enter the window factor (f_s). The window factor is the ratio of the light flux entering the window from the sky to the light flux on an exterior horizontal plane. For an unobstructed sky $f_s = .39$.

Step 7b: To calculate the illumination level from the reflected component under an overcast sky, enter the window factor (f_s) as in step 7a and the horizontal illumination from the sky (E_{sky}), which can be found from Figure 36A in reference 5.

Step 7c: To calculate the daylight factor from the reflected component under a clear sky, enter the window factor (f_s), the horizontal illumination from the sky (E_{sky}) from Figure 36B, C, or D in reference 5, and the horizontal illumination from the sun

(E_{sun}) from Figure 37A in reference 5. The window factor for a clear sky is a function of solar altitude as well as of window azimuth from the sun and is given below.

Solar Altitude	Window Azimuth from Sun 0°	45°	90°	135°	180°
10°	.68	.65	.50	.35	.32
20°	.72	.67	.50	.33	.28
30°	.73	.70	.50	.30	.27
40°	.74	.69	.50	.31	.26
50°	.73	.68	.50	.32	.27
60°	.70	.66	.50	.34	.30
70°	.66	.62	.50	.38	.34
80°	.59	.56	.50	.44	.41
90°	.50	.50	.50	.50	.50

Step 7d: To calculate the illumination level from the reflected component under a clear sky, proceed as in step 7c, but a different label is pressed for the resulting answer.

General Notes: Reflected Component

1) A single average value for the reflected component is computed for the entire room.

2) It is unnecessary to re-enter all the input data for repeated calculations. Change only those values entered in steps 3 through 6 that differ from the previous run. Then execute the program beginning at step 7.

3) If a printer is being used, it is highly advisable to make a list of the register contents before running the program. To obtain a permanent record of the data registers, enter 15 and then press INV LST before executing step 7. (For register assignments see Figure 7.)

4) Figure 5 summarizes the steps required to enter and run the Reflected Component program.

SAMPLE PROBLEM

Calculate the illumination for the room shown in Figure 3, which is

30 feet wide, 20 feet deep, and 8.67 feet high and which has one large window, 5 feet high by 28 feet wide. The window is 2 feet above the floor and centered on a wall facing due west. Glazing consists of two layers of 1/4 inch clear glass having a combined normal daylight transmission of 78%. The ceiling has a reflectance of 80%, the floor 20%, the wall 50%, and the glass 14%.

Illumination is to be calculated under both clear and overcast conditions. The sun is assumed to be due south at an altitude of 40°. The horizontal illumination from the sky (E_{sky}) is 1400 footcandles under overcast sky conditions (from Figure 36A in reference 5) and 1200 footcandles under clear sky conditions (from Figure 36C in reference 5). The horizontal illumination from the sun (E_{sun}) is 4800 footcandles (from Figure 37A in reference 5). Finally, a three-by-three calculation grid (9 calculation points) was selected, each edge of the grid being five feet from the nearest wall. (See Figure 3)

The sky component program for both clear and overcast skies was run first. Figure 6 shows the sample input and output from this example in which both the data register contents and results are identified. The reflected component program for both sky conditions were then run. Figure 7 shows the sample input and output from this run; here again data register contents and results have been identified. Finally, the sky component and reflected component values were added to determine overall illumination values. Results from the overcast sky example are shown in Figure 8. Notice that the illumination is symmetric about the center line of the room as expected. Results for the clear sky example are given in Figure 9. Here the change in sky luminance with azimuth results in an asymmetrical illumination distribution across the room. In each case the reflected component is calculated as an average value throughout the room. This approximation will generally result in an overestimate of daylight illumination in the back of the room. Comparison between reflected component results from the average value approach described here, and a more detailed calculation is given in reference 2.

CONCLUSION

A relatively accurate, simple, and fast procedure for calculating interior daylight illumination has been presented. It is hoped that the application of this procedure will encourage the use of daylighting, placing it in a proper relationship to other design considerations. A lengthier version of this paper that includes a detailed program description, user instructions, and several worked examples (which include external obstructions, overhangs, direct sun in room, etc.) will be available from the authors at the address below. This calculation procedure is one of several daylighting design tools now under development as part of the LBL/DOE Daylighting Program. For information on the availability of other daylighting design tools, write to: Windows and Daylighting Program, Lawrence Berkeley Laboratory, Building 90, Room 3111, Berkeley, California 94720.

ACKNOWLEDGEMENTS

The work described in this paper was funded by the Assistant Secretary for Conservation and Solar Energy, Office of Buildings and Community Systems, Buildings Division of the U.S. Department of Energy under Contract No. W-7405-ENG-48.

REFERENCES

1. Bryan, H.J., and Clear, R.C., "Calculating Interior Daylight Illumination with a Programmable Hand Calculator," presented at the 1980 IES Annual Technical Conference, Dallas, Texas, August 24-28, 1980. (To be published in the Journal of the IES).

2. Bryan, H.J., Clear, R.C., Rosen, J., and Selkowitz, S., Quicklite 1 Users Manual." (To be published as an LBL report.)

3. CIE Technical Committee E-3.2, "Daylight: International Recommendations for the Calculation of Natural Daylight," CIE PUBLICATION No. 16, Commission Internationale d'Eclairage, Paris, 1970.

4. CIE Technical Committee 4.2, "Standardization of Luminance Distribution on Clear Skies," CIE PUBLICATION No. 22, Commission Internationale de l'Eclairage, Paris, 1973.

5. IES Daylighting Committee, "Recommended Practice of Daylighting," LIGHTING DESIGN & APPLICATION, Vol. 9, No. 2, February 1979, p. 45 & 46.

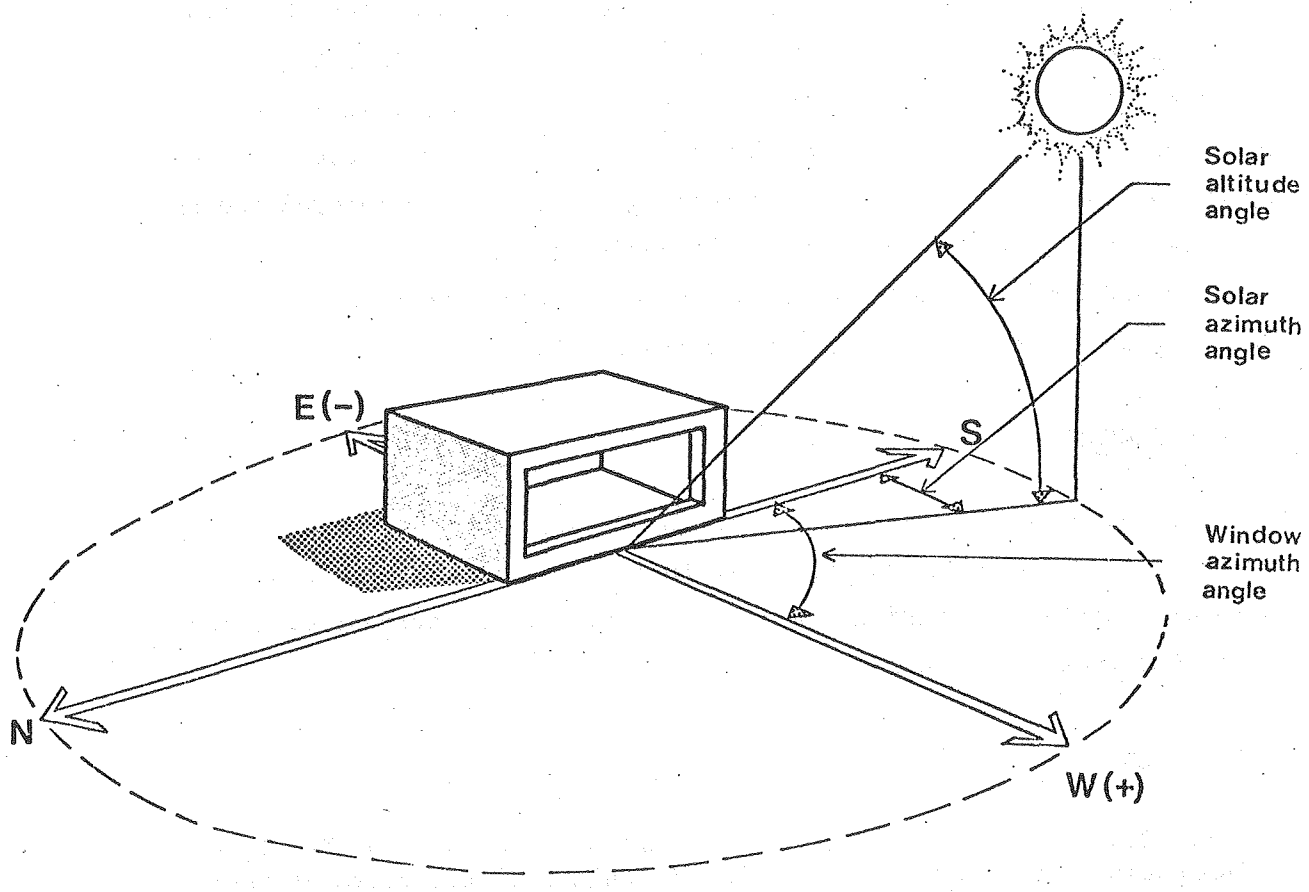

FIGURE 1. SITE COORDINATE SYSTEM FOR PROGRAM

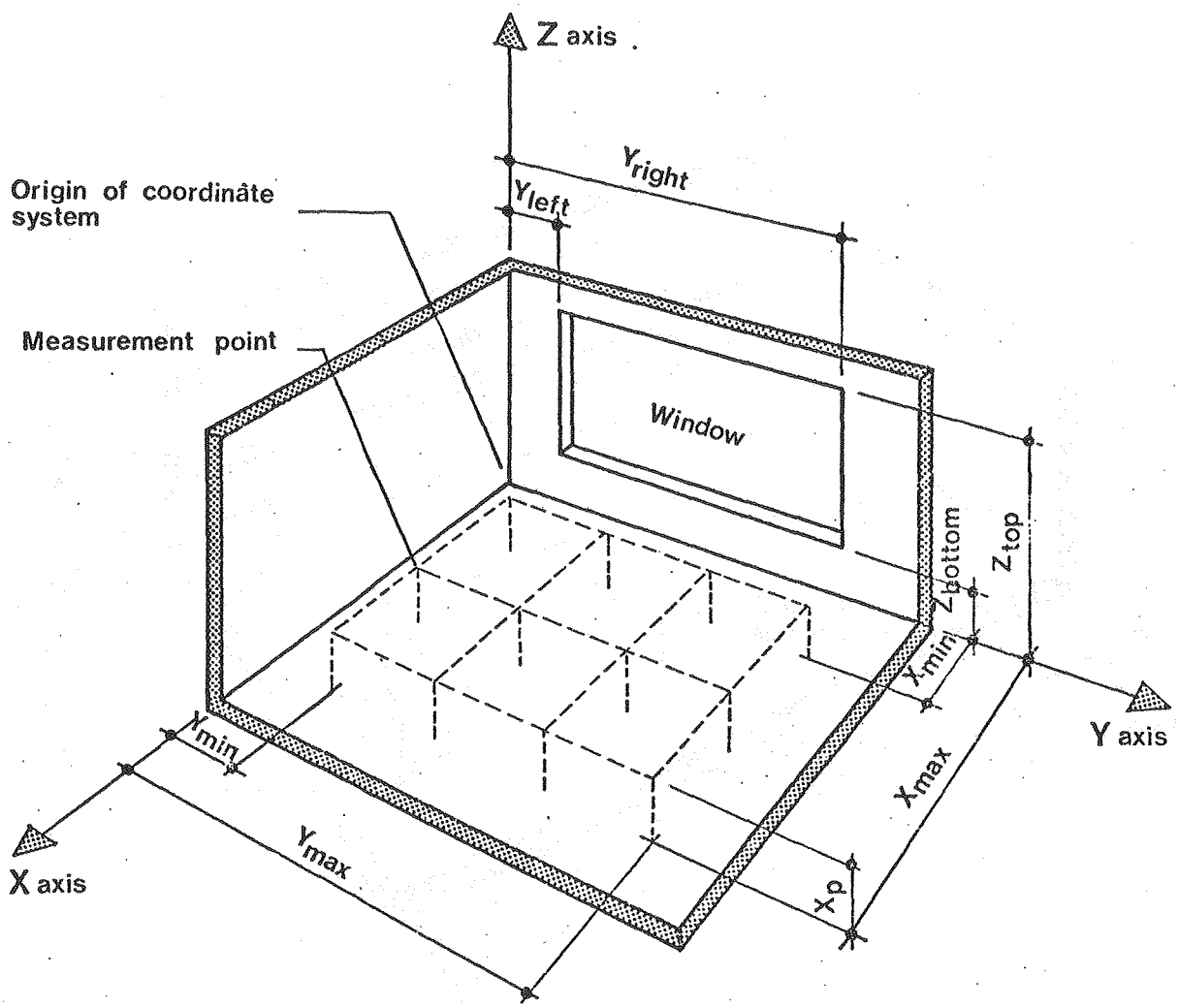

FIGURE 2. ROOM COORDINATE SYSTEM FOR PROGRAM

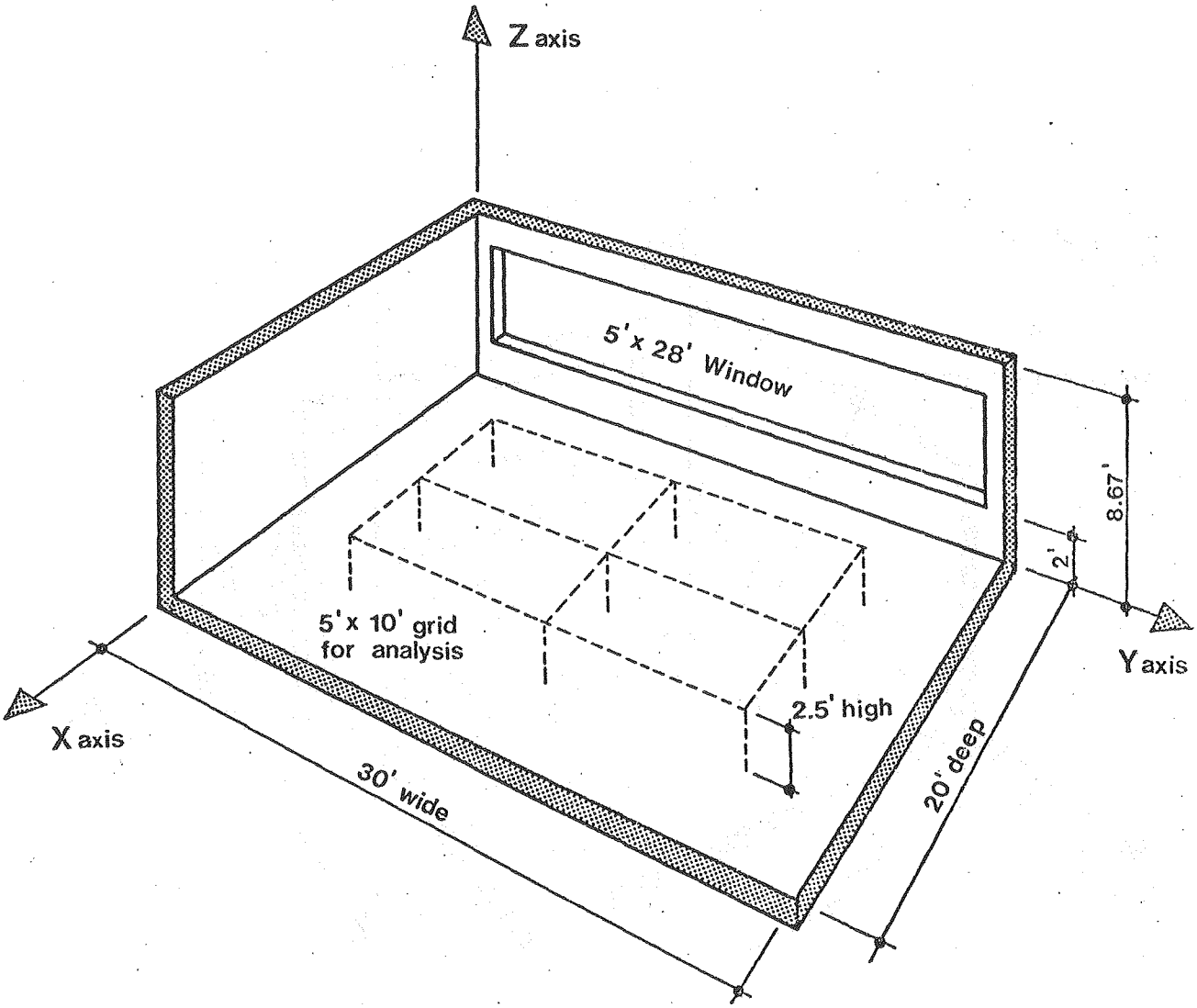

FIGURE 3. EXAMPLE ROOM

STEP	PROCEDURE	ENTER	PRESS	DISPLAY
1	Repartition calculator	5	2nd OP 17	559.49
2	Clear Sky: Read sides 1, 2 & 3	1,2,3	2nd INV WRITE	1,2,3
	Overcast Sky: Read sides 1 & 2	1,2	2nd INV WRITE	1,2
3a	Enter Window Transmission	T_o	A	$1.018T_o$
Note:	Steps 3b-3e should be executed for clear sky only			
3b	Enter Normalization Factor	N_{sc}	R/S	N_{sc}
3c	Enter Window Azimuth (in degrees)	AZ_{window}	R/S	AZ_{window}
3d	Enter Solar Azimuth (in degrees)	AZ_{solar}	R/S	AZ_{solar}
3e	Enter Solar Altitude (in degrees)	ALT_{solar}	R/S	ALT_{solar}
4	Enter Y_{left}	Y_{left}	STO 3Ø	Y_{left}
	Enter Y_{right}	Y_{right}	STO 31	Y_{right}
	Enter Z_{bottom}	Z_{bottom}	STO 32	Z_{bottom}
	Enter Z_{top}	Z_{top}	STO 33	Z_{top}
	Enter Z_p	Z_p	STO 34	Z_p
5	To calculate Daylight Factor: Enter 1	1 or E_{sky}	STO 35	1 or E_{sky}
	To calculate Illumination: Enter E_{sky}			
Note:	For Single Point Calculation:			
6a	Enter Y_p	Y_p	STO 36	Y_p
	Enter X_p	X_p	STO 37	X_p
7a	Run Program	—	2nd B'	S.C.
Note:	For Multiple Point Calculations:			
6b	Enter Y_{min}	Y_{min}	STO 38	Y_{min}
	Enter Y_{max}	Y_{max}	STO 39	Y_{max}
	Enter X_{min}	X_{min}	STO 4Ø	X_{min}
	Enter X_{max}	X_{max}	STO 41	X_{max}
	Enter number of points along Y axis	N_y	STO 42	N_y
	Enter number of points along X axis	N_x	STO 43	N_x
7b	Run Program	—	2nd D'	S.C.

FIGURE 4. SKY COMPONENT PROGRAM WORKSHEET

STEP	PROCEDURE	ENTER	PRESS	DISPLAY
1	Repartition calculator	3	2nd OP 17	719.29
2	Read sides 1 & 2	1,2	2nd INV WRITE	1,2
3	Enter Window Width	$Width_{win}$	STO 15	$Width_{win}$
	Enter Window Height	$Height_{win}$	STO 16	$Height_{win}$
4	Enter Room Width	$Width_{rm}$	STO 17	$Width_{rm}$
	Enter Room Depth	$Depth_{rm}$	STO 18	$Depth_{rm}$
	Enter Room Height	$Height_{rm}$	STO 19	$Height_{rm}$
	Enter Window Sill Height	$Height_{sill}$	STO 2Ø	$Height_{sill}$
5	Enter Window Transmission	T_o	STO 21	T_o
6	Enter Ceiling Reflectance	ceiling	STO 22	ceiling
	Enter Floor Reflectance	floor	STO 23	floor
	Enter Glass Reflectance	glass	STO 24	glass
	Enter Wall Reflectance	wall	STO 25	wall
	Enter Ground Reflectance	ground	STO 26	ground
7a	Daylight Factor for an overcast sky:			
	Enter Window Factor	f_s	STO 27	f_s
	Run Program	—	A	R.C.
7b	Illumination for an overcast sky:			
	Enter Window Factor	f_s	STO 27	f_s
	Enter Illumination from sky	E_{sky}	STO 28	E_{sky}
	Run Program	—	B	R.C.
7c	Daylight Factor for a clear sky:			
	Enter Window Factor	f_s	STO 27	f_s
	Enter Illumination from sky	E_{sky}	STO 28	E_{sky}
	Enter Illumination from sun	E_{sun}	STO 29	E_{sun}
	Run Program	—	C	R.C.
7d	Illumination for a clear sky:			
	Enter Window Factor	f_s	STO 27	f_s
	Enter Illumination from sky	E_{sky}	STO 28	E_{sky}
	Enter Illumination from sun	E_{sun}	STO 29	E_{sun}
	Run Program	—	D	R.C.

FIGURE 5. REFLECTED COMPONENT PROGRAM WORKSHEET

VARIABLE	OVERCAST SKY INPUT	OVERCAST SKY MEMORY #	CLEAR SKY INPUT	CLEAR SKY MEMORY #
Y_{left}	1.	30	1.	30
Y_{right}	29.	31	29.	31
Z_{bottom}	2.	32	2.	32
Z_{top}	7.	33	7.	33
Z_p	2.5	34	2.5	34
E_{sky}	1400.	35	1200.	35
Y_p	0.	36	0.	36
X_p	0.	37	0.	37
Y_{min}	5.	38	5.	38
Y_{max}	25.	39	25.	39
X_{min}	5.	40	5.	40
X_{max}	15.	41	15.	41
N_y	3.	42	3.	42
N_x	3.	43	3.	43
$1.018T_o$	0.79404	44	0.79404	44
N_{sc}	0.	45	2.741	45
AZ_{window}	0.	46	90.	46
AZ_{solar}	0.	47	0.	47
ALT_{solar}	0.	48	40.	48
	0.	49	0.	49

OVERCAST SKY OUTPUT		CLEAR SKY OUTPUT	
5.	X	5.	X
5.	Y	5.	Y
88.96117803	SC	77.88657598	SC
5.	X	5.	X
15.	Y	15.	Y
102.7729127	SC	104.8656102	SC
5.	X	5.	X
25.	Y	25.	Y
88.96117803	SC	96.82265492	SC
10.	X	10.	X
5.	Y	5.	Y
21.5263186	SC	25.84613883	SC
10.	X	10.	X
15.	Y	15.	Y
27.28921538	SC	37.53479146	SC
10.	X	10.	X
25.	Y	25.	Y
21.5263186	SC	32.852973	SC
15.	X	15.	X
5.	Y	5.	Y
8.23775761	SC	12.04242839	SC
15.	X	15.	X
15.	Y	15.	Y
10.48444276	SC	16.81735902	SC
15.	X	15.	X
25.	Y	25.	Y
8.23775761	SC	15.02274864	SC

FIGURE 6. INPUT AND OUTPUT FOR SKY COMPONENT PROGRAM

VARIABLE	OVERCAST SKY INPUT	OVERCAST SKY MEMORY #	CLEAR SKY INPUT	CLEAR SKY MEMORY #
$WIDTH_{win}$	28.	15	28.	15
$HEIGHT_{win}$	5.	16	5.	16
$WIDTH_{rm}$	30.	17	30.	17
$DEPTH_{rm}$	20.	18	20.	18
$HEIGHT_{rm}$	8.67	19	8.67	19
$HEIGHT_{sill}$	2.	20	2.	20
T_o	0.78	21	0.78	21
$\rho_{ceiling}$	0.8	22	0.8	22
ρ_{floor}	0.2	23	0.2	23
ρ_{glass}	0.14	24	0.14	24
ρ_{wall}	0.5	25	0.5	25
ρ_{ground}	0.2	26	0.2	26
FS	0.39	27	0.5	27
E_{sky}	1400.	28	1200.	28
E_{sun}	0.	29	4800.	29
	OUTPUT		OUTPUT	
R.C.	27.	RC	61.	RC

FIGURE 7. INPUT AND OUTPUT FOR REFLECTED COMPONENT PROGRAM

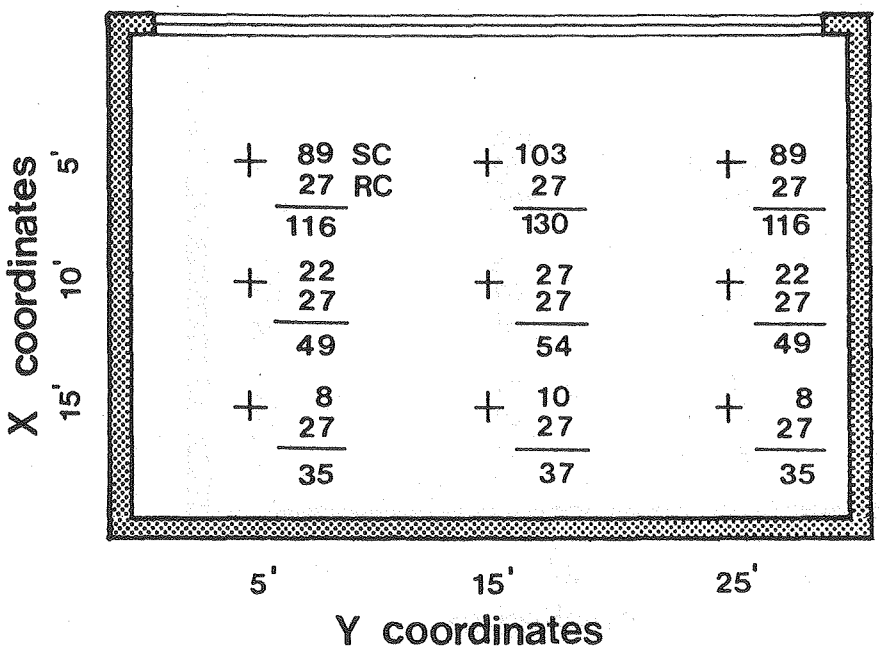

FIGURE 8. OVERCAST SKY ILLUMINATION VALUES (fc) FOR EXAMPLE ROOM

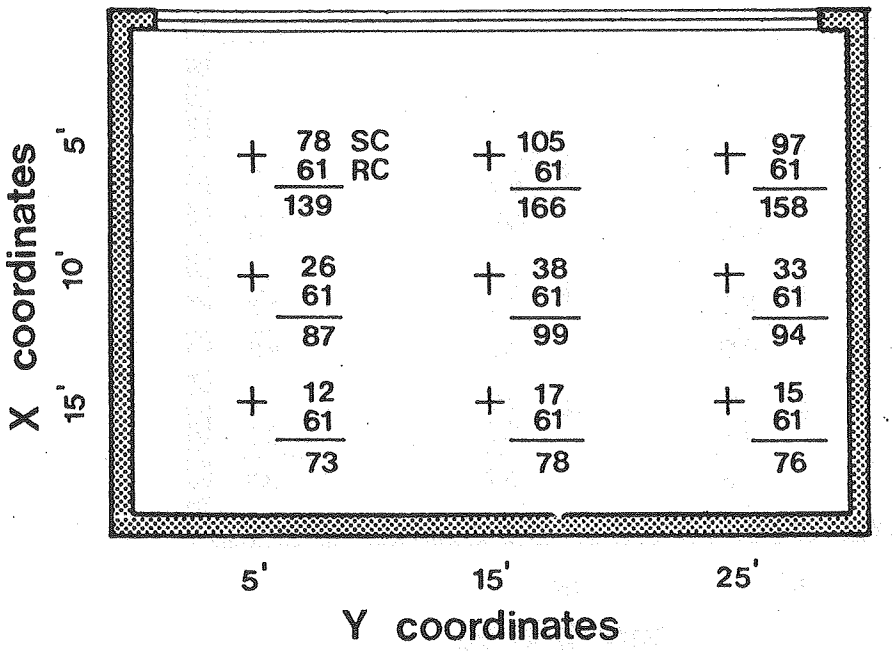

FIGURE 9. CLEAR SKY ILLUMINATION VALUES (fc) FOR EXAMPLE ROOM

SKY COMPONENT PROGRAM: OVERCAST SKY

000	76	LBL	055	18	18	110	42	STO	165	97	DSZ
001	16	A'	056	34	√X	111	08	08	166	09	09
002	42	STO	057	85	+	112	02	2	167	68	NOP
003	15	15	058	01	1	113	42	STO	168	43	RCL
004	39	COS	059	54	)	114	07	07	169	22	22
005	42	STO	060	65	×	115	76	LBL	170	44	SUM
006	16	16	061	43	RCL	116	58	FIX	171	10	10
007	33	X²	062	17	17	117	03	3	172	97	DSZ
008	53	(	063	65	×	118	42	STO	173	08	08
009	42	STO	064	43	RCL	119	24	24	174	42	STO
010	17	17	065	16	16	120	76	LBL	175	06	6
011	65	×	066	55	÷	121	42	STO	176	42	STO
012	43	RCL	067	53	(	122	02	2	177	24	24
013	12	12	068	43	RCL	123	22	INV	178	02	2
014	85	+	069	18	18	124	44	SUM	179	42	STO
015	43	RCL	070	45	Y^X	125	24	24	180	08	08
016	13	13	071	02	2	126	43	RCL	181	61	GTO
017	54	)	072	93	.	127	10	10	182	42	STO
018	42	STO	073	05	5	128	39	COS	183	76	LBL
019	18	18	074	54	)	129	42	STO	184	68	NOP
020	53	(	075	54	)	130	11	11	185	89	π
021	53	(	076	92	RTN	131	33	X²	186	55	÷
022	53	(	077	76	LBL	132	42	STO	187	02	2
023	53	(	078	11	A	133	12	12	188	95	=
024	43	RCL	079	65	×	134	42	STO	189	32	X:T
025	13	13	080	01	1	135	14	14	190	43	RCL
026	85	+	081	93	.	136	43	RCL	191	21	21
027	43	RCL	082	00	0	137	10	10	192	42	STO
028	17	17	083	01	1	138	38	SIN	193	10	10
029	65	×	084	08	8	139	33	X²	194	67	EQ
030	43	RCL	085	95	=	140	42	STO	195	59	INT
031	14	14	086	42	STO	141	13	13	196	97	DSZ
032	54	)	087	44	44	142	94	+/-	197	07	07
033	55	÷	088	91	R/S	143	44	SUM	198	58	FIX
034	43	RCL	089	76	LBL	144	14	14	199	76	LBL
035	18	18	090	13	C	145	04	4	200	59	INT
036	54	)	091	43	RCL	146	36	PGM	201	98	ADV
037	45	Y^X	092	23	23	147	09	09	202	04	4
038	01	1	093	42	STO	148	13	C	203	04	4
039	93	.	094	10	10	149	36	PGM	204	69	OP
040	05	5	095	94	+/-	150	09	09	205	04	04
041	85	+	096	85	+	151	14	D	206	43	RCL
042	01	1	097	43	RCL	152	65	×	207	37	37
043	54	)	098	21	21	153	43	RCL	208	69	OP
044	65	×	099	95	=	154	13	13	209	06	06
045	53	(	100	55	÷	155	65	×	210	04	4
046	02	2	101	04	4	156	43	RCL	211	05	5
047	65	×	102	42	STO	157	11	11	212	69	OP
048	43	RCL	103	09	09	158	65	×	213	04	04
049	16	16	104	95	=	159	43	RCL	214	43	RCL
050	65	×	105	42	STO	160	24	24	215	36	36
051	43	RCL	106	22	22	161	95	=	216	69	OP
052	11	11	107	00	0	162	44	SUM	217	06	06
053	55	÷	108	42	STO	163	19	19	218	03	3
054	43	RCL	109	19	19	164	22	INV	219	06	6

220	01	1
221	05	5
222	69	OP
223	04	04
224	43	RCL
225	19	19
226	65	×
227	43	RCL
228	44	44
229	65	×
230	43	RCL
231	22	22
232	55	÷
233	07	7
234	55	÷
235	89	π
236	65	×
237	43	RCL
238	35	35
239	95	=
240	69	OP
241	06	06
242	92	RTN
243	76	LBL
244	14	D
245	43	RCL
246	42	42
247	42	STO
248	00	00
249	75	-
250	01	1
251	95	=
252	35	1/X
253	65	×
254	53	(
255	43	RCL
256	39	39
257	75	-
258	43	RCL
259	38	38
260	42	STO
261	36	36
262	54	)
263	95	=
264	42	STO
265	39	39
266	53	(
267	43	RCL
268	41	41
269	75	-
270	43	RCL
271	40	40
272	42	STO
273	37	37
274	54	)
275	55	÷
276	53	(
277	43	RCL
278	06	06
279	75	-
280	01	1
281	54	)
282	95	=
283	42	STO
284	41	41
285	76	LBL
286	43	RCL
287	71	SBR
288	12	B
289	61	GTO
290	44	SUM
291	76	LBL
292	24	CE
293	71	SBR
294	22	INV
295	76	LBL
296	44	SUM
297	71	SBR
298	13	C
299	22	INV
300	97	DSZ
301	00	00
302	34	√X
303	43	RCL
304	39	39
305	44	SUM
306	36	36
307	61	GTO
308	24	CE
309	76	LBL
310	34	√X
311	22	INV
312	97	DSZ
313	06	06
314	35	1/X
315	43	RCL
316	42	42
317	42	STO
318	00	00
319	43	RCL
320	38	38
321	42	STO
322	36	36
323	43	RCL
324	41	41
325	44	SUM
326	37	37
327	61	GTO
328	43	RCL
329	76	LBL
330	35	1/X
331	91	R/S
332	76	LBL
333	12	B
334	70	RAD
335	29	CP
336	43	RCL
337	32	32
338	75	-
339	43	RCL
340	34	34
341	95	=
342	42	STO
343	23	23
344	94	+/-
345	22	INV
346	77	GE
347	23	LNX
348	89	π
349	55	÷
350	02	2
351	95	=
352	42	STO
353	21	21
354	61	GTO
355	33	X²
356	76	LBL
357	23	LNX
358	43	RCL
359	37	37
360	55	÷
361	43	RCL
362	23	23
363	95	=
364	22	INV
365	30	TAN
366	42	STO
367	21	21
368	76	LBL
369	33	X²
370	43	RCL
371	37	37
372	55	÷
373	53	(
374	43	RCL
375	33	33
376	75	-
377	43	RCL
378	34	34
379	54	)
380	95	=
381	22	INV
382	30	TAN
383	42	STO
384	23	23
385	76	LBL
386	22	INV
387	43	RCL
388	30	30
389	75	-
390	43	RCL
391	36	36
392	95	=
393	55	÷
394	43	RCL
395	37	37
396	95	=
397	22	INV
398	30	TAN
399	42	STO
400	01	01
401	43	RCL
402	31	31
403	75	-
404	43	RCL
405	36	36
406	95	=
407	55	÷
408	43	RCL
409	37	37
410	95	=
411	22	INV
412	30	TAN
413	42	STO
414	02	02
415	87	IFF
416	01	01
417	13	C
418	92	RTN
419	76	LBL
420	17	B'
421	86	STF
422	01	01
423	61	GTO
424	12	B
425	76	LBL
426	19	D'
427	22	INV
428	86	STF
429	01	01
430	43	RCL
431	43	43
432	42	STO
433	06	06
434	61	GTO
435	14	D

SKY COMPONENT: CLEAR SKY

000	76	LBL	055	53	(	110	53	(	165	42	STO
001	16	A'	056	53	(	111	93	.	166	44	44
002	42	STO	057	43	RCL	112	03	3	167	91	R/S
003	15	15	058	13	13	113	02	2	168	42	STO
004	39	COS	059	85	+	114	94	+/-	169	45	45
005	42	STO	060	43	RCL	115	65	×	170	91	R/S
006	16	16	061	17	17	116	43	RCL	171	42	STO
007	33	X²	062	65	×	117	18	18	172	46	46
008	53	(	063	43	RCL	118	34	ΓX	173	71	SBR
009	42	STO	064	14	14	119	55	÷	174	28	LOG
010	17	17	065	54	)	120	43	RCL	175	42	STO
011	65	×	066	55	÷	121	11	11	176	27	27
012	43	RCL	067	43	RCL	122	55	÷	177	43	RCL
013	12	12	068	18	18	123	43	RCL	178	46	46
014	85	+	069	54	)	124	16	16	179	91	R/S
015	43	RCL	070	45	Y×	125	54	)	180	42	STO
016	13	13	071	01	1	126	22	INV	181	47	47
017	54	)	072	93	.	127	23	LNX	182	71	SBR
018	42	STO	073	05	5	128	54	)	183	28	LOG
019	18	18	074	85	+	129	65	×	184	94	+/-
020	53	(	075	01	1	130	43	RCL	185	44	SUM
021	53	(	076	54	)	131	17	17	186	27	27
022	43	RCL	077	65	×	132	65	×	187	43	RCL
023	26	26	078	53	(	133	43	RCL	188	47	47
024	65	×	079	93	.	134	16	16	189	91	R/S
025	43	RCL	080	09	9	135	55	÷	190	42	STO
026	20	20	081	01	1	136	53	(	191	48	48
027	65	×	082	85	+	137	43	RCL	192	75	-
028	53	(	083	01	1	138	18	18	193	09	9
029	43	RCL	084	00	0	139	45	Y×	194	00	0
030	15	15	085	65	×	140	02	2	195	95	=
031	85	+	086	53	(	141	93	.	196	94	+/-
032	43	RCL	087	03	3	142	05	5	197	71	SBR
033	27	27	088	94	+/-	143	54	)	198	28	LOG
034	54	)	089	65	×	144	54	)	199	42	STO
035	39	COS	090	43	RCL	145	92	RTN	200	25	25
036	85	+	091	29	29	146	76	LBL	201	70	RAD
037	43	RCL	092	22	INV	147	28	LOG	202	38	SIN
038	11	11	093	39	COS	148	65	×	203	42	STO
039	65	×	094	54	)	149	89	π	204	20	20
040	43	RCL	095	22	INV	150	55	÷	205	43	RCL
041	28	28	096	23	LNX	151	01	1	206	25	25
042	65	×	097	85	+	152	08	8	207	39	COS
043	43	RCL	098	93	.	153	00	0	208	42	STO
044	16	16	099	04	4	154	95	=	209	28	28
045	54	)	100	05	5	155	92	RTN	210	43	RCL
046	55	÷	101	65	×	156	76	LBL	211	48	48
047	43	RCL	102	43	RCL	157	11	A	212	91	R/S
048	18	18	103	29	29	158	65	×	213	76	LBL
049	34	ΓX	104	33	X²	159	01	1	214	13	C
050	54	)	105	54	)	160	93	.	215	43	RCL
051	42	STO	106	65	×	161	00	0	216	23	23
052	29	29	107	53	(	162	01	1	217	42	STO
053	53	(	108	01	1	163	08	8	218	10	10
054	53	(	109	75	-	164	95	=	219	94	+/-

220	85	+	275	36	PGM	330	69	OP	385	75	-
221	43	RCL	276	09	09	331	04	04	386	01	1
222	21	21	277	14	D	332	43	RCL	387	95	=
223	95	=	278	65	×	333	37	37	388	35	1/X
224	55	÷	279	43	RCL	334	69	OP	389	65	×
225	04	4	280	13	13	335	06	06	390	53	(
226	42	STO	281	65	×	336	04	4	391	43	RCL
227	09	09	282	43	RCL	337	05	5	392	39	39
228	95	=	283	11	11	338	69	OP	393	75	-
229	42	STO	284	65	×	339	04	04	394	43	RCL
230	22	22	285	43	RCL	340	43	RCL	395	38	38
231	00	0	286	24	24	341	36	36	396	42	STO
232	42	STO	287	95	=	342	69	OP	397	36	36
233	19	19	288	44	SUM	343	06	06	398	54	)
234	42	STO	289	19	19	344	03	3	399	95	=
235	08	08	290	22	INV	345	06	6	400	42	STO
236	02	2	291	97	DSZ	346	01	1	401	39	39
237	42	STO	292	09	09	347	05	5	402	53	(
238	07	07	293	68	NOP	348	69	OP	403	43	RCL
239	76	LBL	294	43	RCL	349	04	04	404	41	41
240	58	FIX	295	22	22	350	43	RCL	405	75	-
241	03	3	296	44	SUM	351	19	19	406	43	RCL
242	42	STO	297	10	10	352	65	×	407	40	40
243	24	24	298	97	DSZ	353	43	RCL	408	42	STO
244	76	LBL	299	08	08	354	44	44	409	37	37
245	42	STO	300	42	STO	355	65	×	410	54	)
246	02	2	301	06	6	356	43	RCL	411	55	÷
247	22	INV	302	42	STO	357	22	22	412	53	(
248	44	SUM	303	24	24	358	55	÷	413	43	RCL
249	24	24	304	02	2	359	03	3	414	06	06
250	43	RCL	305	42	STO	360	55	÷	415	75	-
251	10	10	306	08	08	361	43	RCL	416	01	1
252	39	COS	307	61	GTO	362	45	45	417	54	)
253	42	STO	308	42	STO	363	65	×	418	95	=
254	11	11	309	76	LBL	364	43	RCL	419	42	STO
255	33	X^2	310	68	NOP	365	35	35	420	41	41
256	42	STO	311	89	π	366	95	=	421	76	LBL
257	12	12	312	55	÷	367	69	OP	422	43	RCL
258	42	STO	313	02	2	368	06	06	423	71	SBR
259	14	14	314	95	=	369	92	RTN	424	12	B
260	43	RCL	315	32	X:T	370	76	LBL	425	61	GTO
261	10	10	316	43	RCL	371	19	D'	426	44	SUM
262	38	SIN	317	21	21	372	22	INV	427	76	LBL
263	42	STO	318	42	STO	373	86	STF	428	24	CE
264	26	26	319	10	10	374	01	01	429	71	SBR
265	33	X^2	320	67	EQ	375	43	RCL	430	22	INV
266	42	STO	321	59	INT	376	43	43	431	76	LBL
267	13	13	322	97	DSZ	377	42	STO	432	44	SUM
268	94	+/-	323	07	07	378	06	06	433	71	SBR
269	44	SUM	324	58	FIX	379	76	LBL	434	13	C
270	14	14	325	76	LBL	380	14	D	435	22	INV
271	04	4	326	59	INT	381	43	RCL	436	97	DSZ
272	36	PGM	327	98	ADV	382	42	42	437	00	00
273	09	09	328	04	4	383	42	STO	438	34	$\sqrt{X}$
274	13	C	329	04	4	384	00	00	439	43	RCL

440	39	39
441	44	SUM
442	36	36
443	61	GTO
444	24	CE
445	76	LBL
446	34	√X
447	22	INV
448	97	DSZ
449	06	06
450	35	1/X
451	43	RCL
452	42	42
453	42	STO
454	00	00
455	43	RCL
456	38	38
457	42	STO
458	36	36
459	43	RCL
460	41	41
461	44	SUM
462	37	37
463	61	GTO
464	43	RCL
465	76	LBL
466	35	1/X
467	91	R/S
468	76	LBL
469	17	B'
470	86	STF
471	01	01
472	76	LBL
473	12	B
474	29	CP
475	43	RCL
476	32	32
477	75	-
478	43	RCL
479	34	34
480	95	=
481	42	STO
482	23	23
483	94	+/-
484	22	INV
485	77	GE
486	23	LNX
487	89	π
488	55	÷
489	02	2
490	95	=
491	42	STO
492	21	21
493	61	GTO
494	33	X²
495	76	LBL
496	23	LNX
497	43	RCL
498	37	37
499	55	÷
500	43	RCL
501	23	23
502	95	=
503	22	INV
504	30	TAN
505	42	STO
506	21	21
507	76	LBL
508	33	X²
509	43	RCL
510	37	37
511	55	÷
512	53	(
513	43	RCL
514	33	33
515	75	-
516	43	RCL
517	34	34
518	54	)
519	95	=
520	22	INV
521	30	TAN
522	42	STO
523	23	23
524	76	LBL
525	22	INV
526	43	RCL
527	30	30
528	75	-
529	43	RCL
530	36	36
531	95	=
532	55	÷
533	43	RCL
534	37	37
535	95	=
536	22	INV
537	30	TAN
538	42	STO
539	01	01
540	43	RCL
541	31	31
542	75	-
543	43	RCL
544	36	36
545	95	=
546	55	÷
547	43	RCL
548	37	37
549	95	=
550	22	INV
551	30	TAN
552	42	STO
553	02	02
554	87	IFF
555	01	01
556	13	C
557	92	RTN

REFLECTED COMPONENT PROGRAM

000	76	LBL	055	44	SUM	110	42	STO	165	95	=
001	33	X^2	056	01	1	111	07	07	166	44	SUM
002	43	RCL	057	42	STO	112	42	STO	167	03	03
003	26	26	058	02	02	113	08	08	168	43	RCL
004	55	÷	059	04	4	114	44	SUM	169	20	20
005	02	2	060	42	STO	115	08	08	170	85	+
006	95	=	061	12	12	116	65	×	171	43	RCL
007	42	STO	062	61	GTO	117	43	RCL	172	16	16
008	09	09	063	23	LNX	118	23	23	173	55	÷
009	92	RTN	064	76	LBL	119	95	=	174	02	2
010	76	LBL	065	14	D	120	42	STO	175	95	=
011	44	SUM	066	71	SBR	121	04	04	176	55	÷
012	43	RCL	067	33	X^2	122	44	SUM	177	43	RCL
013	29	29	068	71	SBR	123	03	03	178	19	19
014	85	+	069	44	SUM	124	43	RCL	179	95	=
015	43	RCL	070	43	RCL	125	05	05	180	42	STO
016	28	28	071	28	28	126	65	×	181	14	14
017	95	=	072	42	STO	127	43	RCL	182	65	×
018	55	÷	073	02	02	128	22	22	183	43	RCL
019	43	RCL	074	00	0	129	95	=	184	13	13
020	28	28	075	42	STO	130	42	STO	185	65	×
021	95	=	076	12	12	131	06	06	186	44	SUM
022	49	PRD	077	76	LBL	132	44	SUM	187	05	05
023	09	09	078	23	LNX	133	03	03	188	43	RCL
024	92	RTN	079	43	RCL	134	43	RCL	189	25	25
025	76	LBL	080	27	27	135	18	18	190	85	+
026	11	A	081	42	STO	136	65	×	191	43	RCL
027	71	SBR	082	01	01	137	43	RCL	192	04	04
028	33	X^2	083	43	RCL	138	19	19	193	95	=
029	04	4	084	15	15	139	65	×	194	55	÷
030	42	STO	085	65	×	140	02	2	195	43	RCL
031	12	12	086	43	RCL	141	65	×	196	05	05
032	01	1	087	16	16	142	42	STO	197	95	=
033	42	STO	088	95	=	143	13	13	198	49	PRD
034	02	02	089	42	STO	144	44	SUM	199	01	01
035	61	GTO	090	10	10	145	08	08	200	01	1
036	23	LNX	091	65	×	146	43	RCL	201	75	-
037	76	LBL	092	53	(	147	25	25	202	43	RCL
038	12	B	093	43	RCL	148	95	=	203	14	14
039	71	SBR	094	24	24	149	44	SUM	204	95	=
040	33	X^2	095	75	-	150	03	03	205	65	×
041	43	RCL	096	43	RCL	151	43	RCL	206	43	RCL
042	28	28	097	25	25	152	17	17	207	13	13
043	42	STO	098	54	)	153	65	×	208	65	×
044	02	02	099	95	=	154	43	RCL	209	44	SUM
045	00	0	100	42	STO	155	19	19	210	07	07
046	42	STO	101	03	03	156	65	×	211	43	RCL
047	12	12	102	43	RCL	157	44	SUM	212	25	25
048	61	GTO	103	17	17	158	13	13	213	85	+
049	23	LNX	104	65	×	159	02	2	214	43	RCL
050	76	LBL	105	43	RCL	160	65	×	215	06	06
051	13	C	106	18	18	161	44	SUM	216	95	=
052	71	SBR	107	95	=	162	08	08	217	55	÷
053	33	X^2	108	42	STO	163	43	RCL	218	43	RCL
054	71	SBR	109	05	05	164	25	25	219	07	07

REFLECTED COMPONENT PROGRAM (cont.)

```
220  95  =
221  65  ×
222  43  RCL
223  09   09
224  85  +
225  43  RCL
226  01   01
227  95  =
228  65  ×
229  43  RCL
230  21   21
231  65  ×
232  43  RCL
233  10   10
234  55  ÷
235  53  (
236  43  RCL
237  08   08
238  75  -
239  43  RCL
240  03   03
241  54  )
242  95  =
243  65  ×
244  43  RCL
245  02   02
246  95  =
247  42  STO
248  11   11
249  98  ADV
250  03   3
251  05   5
252  01   1
253  05   5
254  69  OP
255  04   04
256  43  RCL
257  11   11
258  58  FIX
259  40  IND
260  12   12
261  69  OP
262  06   06
263  22  INV
264  58  FIX
265  98  ADV
266  91  R/S
```