ERNEST ORLANDO LAWRENCE
BERKELEY NATIONAL LABORATORY

Building Scale DC Microgrids

Chris Marnay, Steven Lanzisera, Michael Stadler, and Judy Lai

Environmental Energy Technologies Division

paper presented at the IEEE EnergyTech2012 Conference
Cleveland OH, 29-31 May 2012

http://eetd.lbl.gov/EA/EMP/emp-pubs.html

This work described in this paper was funded by the Office of Energy Efficiency and Renewable Energy, Building Technologies Program of the U.S. Department of Energy under Contract No. DE-AC02-05CH11231. It also builds on work previously supported by U.S. DOE's Office of Electricity Delivery and Energy Reliability.

Disclaimer

This document was prepared as an account of work sponsored by the United States Government. While this document is believed to contain correct information, neither the United States Government nor any agency thereof, nor The Regents of the University of California, nor any of their employees, makes any warranty, express or implied, or assumes any legal responsibility for the accuracy, completeness, or usefulness of any information, apparatus, product, or process disclosed, or represents that its use would not infringe privately owned rights. Reference herein to any specific commercial product, process, or service by its trade name, trademark, manufacturer, or otherwise, does not necessarily constitute or imply its endorsement, recommendation, or favoring by the United States Government or any agency thereof, or The Regents of the University of California. The views and opinions of authors expressed herein do not necessarily state or reflect those of the United States Government or any agency thereof, or The Regents of the University of California.

Ernest Orlando Lawrence Berkeley National Laboratory is an equal opportunity employer.

Building Scale DC Microgrids

Chris Marnay, *IEEE Member,* Steven Lanzisera, *IEEE Member*,
Michael Stadler, *IEEE Member,* and Judy Lai

***Abstract*—The structure of both electricity supply and demand is evolving rapidly. Dispersed building-scale generation is becoming an increasingly familiar generation source and electronics based loads are ubiquitous. Given this landscape, the historic advantages of AC electricity delivery, while still strong in the high voltage realm of meshed grids and medium voltage distribution, is seeming less attractive for emerging small-scale semiautonomous systems, generally known as *microgrids (or µgrids)*. The dominance of small-scale photovoltaics or variable frequency sources in small systems, together with the likely emergence of fuel cells and required batteries suggest a DC bus. Similarly, building loads increasingly involve DC somewhere in their electricity supply path. Given these circumstances, DC µgrids potentially eliminate conversion losses with their associated heat management problems and costs, as well as providing high quality service to loads. This paper discusses these trends and other factors that are pushing our power system towards a more decentralized paradigm, and one more reliant on DC systems.**

***Index Terms*—microgrids, direct current, consumer electronics, variable speed drives, electric vehicles, photovoltaic cells, fuel cells, power quality, converters, inverters.**

I. Introduction

INCREASINGLY, electricity used in buildings will be from local, small-scale renewable sources, e.g. photovoltaic modules (PV), from other direct current (DC) generation, e.g. fuel cells (FCs), from combustion driven combined heat and power (CHP) technologies, or will be drawn from either stationary or plug-in electric vehicle (PEV) batteries.

At the same time, an increasing share of building loads are either native DC, such as electronics and compact fluorescent and light emitting diode (LED) lighting, or involve DC at some point in their power delivery chain, e.g. variable frequency drives. Additionally, the challenges of meeting the demanding power quality and reliability (PQR) requirements of many building end-uses using the universal PQR of utility-delivered alternating current (AC) power, as well as mitigating AC-DC conversion losses, is reviving interest in local DC networks. Modern power electronics permit predominantly DC sources to offer efficient tailored PQR service to loads by integrating them in controlled microgrids *(µgrids)*.

II. Evolving Electricity Delivery

It is often noted that early local power systems used DC power, beginning with Edison's Pearl Street Station in Manhattan; however, DC was less amenable to transmission over long distances, which was the key advantage that allowed AC to ultimately dominate [1]. Our legacy power system paradigm dates from George Westinghouse's ambitious and successful 1895 Niagara Falls Power Project. It implemented Tesla's concept for long-distance AC power delivery at 25 Hz and high voltages enabling energy transmission 32 km to Buffalo, even though the loads at that time were entirely DC. In those early days, both AC and DC coexisted. Some complex systems were even developed, such as the one at the Biltmore Estate, to permit use of both for various household functions. At Biltmore, supply switched back and forth between AC and DC for the incandescent lighting, depending on the availability of AC from the local electric company, which gave priority to a local rail system [2].

From this beginning, AC rapidly gained dominance and the power supply infrastructure, as we know it today, has been built out at a massive scale, entrenching the highly centralized paradigm for power delivery. For example, the synchronized Western Interconnect, of which California is a part, serves over 70 million people, and the California Independent System Operator (CAISO) alone controls almost 80% of the state's electricity network, and delivers over 200 TWh/a.

This structure may now be devolving towards one in which numerous local heterogeneous control centers co-exist at lower voltage extremities of the network, while the legacy backbone high voltage meshed grid continues to function as today. Given that locally controlled systems might exist on the periphery of the system naturally leads to the proposition that many of these systems might involve DC power, at least in part. Since many, if not most, of these local systems will involve significant DC production and consumption, they might involve DC distribution to ensure high PQR and avoid conversion losses.

III. Changing Policy Priorities

The centralized paradigm that high voltage, long distance transmission drove is now coming under review because of multiple changes that are taking place in the industry. It is important to remember that electricity demand continues to grow in developed economies, although current U.S. expectations are for somewhat slowing demand growth. Figure 1 shows how recent forecasts by the U.S. Energy Information

This work described in this paper was funded by the Office of Energy Efficiency and Renewable Energy, Building Technologies Program of the U.S. Department of Energy under Contract No. DE-AC02-05CH11231. It also builds on work previously supported by U.S. DOE's Office of Electricity Delivery and Energy Reliability.

C. Marnay is with the Ernest Orlando Lawrence Berkeley National Laboratory (Berkeley Lab or LBNL), Berkeley, CA 94720-8136, U.S.A. (e-mail: ChrisMarnay@LBL.gov).

S. Lanzisera is with Berkeley Lab. (e-mail: SMLanzisera@LBL.gov).

M. Stadler is with Berkeley Lab (e-mail: MStadler@LBL.gov).

J. Lai is with Berkeley Lab. (e-mail: JLai@LBL.gov)

Agency have predicted slower demand growth in recent years. Forecasts are now fairly close to the rate of population growth, i.e. per capita consumption is almost constant, which is a significant change in the history of this industry. Such forecasts are, however, quite uncertain because of the possible electrification of transportation, as well by other possible innovations, such as ground source heat pump space heating, not to mention our seemingly insatiable appetite for electronic gadgets.

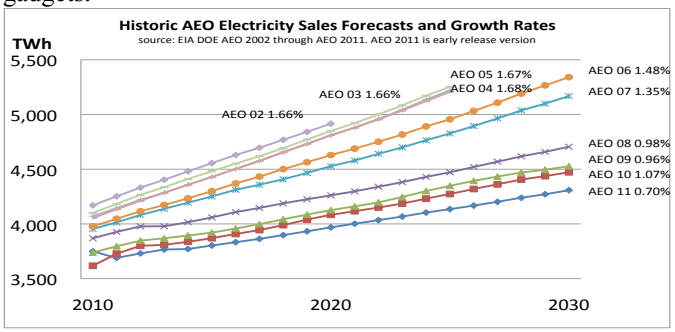

Fig. 1. U.S. Energy Information Administration forecasts of U.S. electricity consumption

To some extent, current policy objectives are contradictory. Expanding supply to meet expected growing demand is unavoidable, while it is also a priority to increase renewable generation penetration, and to develop and maintain competitive wholesale electricity markets. While all of the above objectives together with increasing difficulty siting new generation and transmission tend to work against a highly reliable high power quality power system, at the same time, we seek to provide the same service quality we enjoy today, or better. In fact, many have argued that the traditional power system must deliver higher PQR, as may be required by a *digital society* [3]. These contradictions have led some to question the traditional paradigm. Following is a short list of some of the key concerns that will challenge the traditional paradigm in the coming era.

A. Climate Change

Concerns about climate change and other environmental issues will result in increased penetrations of renewable generation in the fuel mix; for example, California has set targets for renewable generation (by its own State definition which does not include large-scale hydro generation) of 20 % by 2010, and 33 % by 2030 [4,5]. The three major electricity suppliers reached approximately 18 % in 2010, missing the 2010 target, but it is within sight, and the 33 % in 2030 target is still effective. Unfortunately, many of these new resources do not fit well into the traditional paradigm. Renewable generation is both variable and relatively unpredictable, compared to traditional fossil resources, which implies that control operators must have more costly reserves available [4]. Another problem with renewable generation is that much of it is expected to come from relatively small installations, e.g. residential PV systems. Controlling numerous, possibly millions, of small sources poses a significant new challenge, and has led analysts to consider alternatives that could manage these problematic smaller scale sources locally. The residual system would continue to be managed centrally so it would operate with similar numbers and sizes of resources as are successfully controlled today. Locally aggregating these small sources in *µgrids* and presenting them to the legacy higher voltage grid, or *macrogrid*, as a controlled entity of a size and with performance that better matches traditional power resources can make them more compatible with our legacy macrogrid. By enabling greater rapid penetration of these desirable but problematic small resources into traditional structures and operations their other well-known low-carbon benefits can be captured more rapidly, and more completely. Since the dispersed paradigm is one that can be realized as either DC or AC µgrids, the local benefits of DC systems as described elsewhere in this paper, can be achieved together with the global benefits of decarbonized electricity.

B. Heat Loss from Central Generation

Unsustainability of heat losses by energy conversion from fossil fuels to electricity is also a growing concern. While some modern technologies can achieve excellent efficiencies as measured by historic standards, the overall systemic efficiency of generation at remote sites, long distance transmission, and local radial distribution delivers barely a third of the initial fossil energy to ultimate devices. One partial solution to this problem is smaller-scale generation closer to loads, which increases the potential CHP, which can improve overall efficiency significantly. In many climates, using the waste heat to cool buildings can be attractive because doing so further reduces expensive on-peak electricity use and downsizes needed generating capacity.

C. Infrastructure Interdependency

Infrastructure interdependency has become a growing concern. That the PQR of our current power delivery is seemingly so critical occurs because so many other vital infrastructures, such as communications, transportation, water treatment, etc., depend upon it. To the extent that vital services could be powered independently of the grid, the consequences of blackouts could be reduced [6]. Communications and computational loads are particularly amenable to DC supply, and these are likewise particularly essential during grid failures, so local DC systems for these loads are appealing for multiple reasons. Note that the pre 1970's telephone system was an almost universal DC grid that reached virtually every home and business in North America. It was, in fact, a duplicate continent-wide power system.

D. Cost of Reliability

Reliability is costly even though customers do not usually see it as a line in their electricity bills. Maintaining high levels of reliability incurs two types of costs, both significant. First, equipment investments to improve PQR, such as underground versus overhead lines, impose direct costs on utility operations. Second, the paramount concern with maintaining high PQR leads to conservative operations, for example, potentially economic exchanges of energy are foregone. It may be that sustaining high PQR across the board no longer makes economic sense. If we are now able to provide PQR locally more closely matched to the requirements of loads, the standards of the centralized grid can be rethought. Our traditional electricity supply paradigm is one in which a standard level of PQR is delivered to all customers, at all times, in all places. One of the more radical ideas holds that as sensitive loads can be supplied by more localized means, then the standards of the

traditional centralized grid could be adjusted to better suit the objectives of our circumstances, that is standards could be more in keeping with current objectives, notably high renewable penetration, competitive markets, etc. The desirable level of reliability may indeed be lower than we enjoy today. Also, the level of PQR could be chosen based on objective criteria, such as the cost-benefit trade-off, rather than on traditional engineering standards alone.

IV. Growth of DC loads and generation

It is quite obvious that native DC loads are growing. Electronics are everywhere, compact fluorescent and LED lamps are ubiquitous, and in addition, many emerging technologies, such as variable frequency drives (VFDs) that use DC are becoming commonplace. This trend is so clear not only because of the attractive capabilities, efficiency, and reliability of these devices, but also because public policies motivated by energy efficiency and related goals are reinforcing the trend. Likewise also stimulated by subsidies, the deployment of PV, a DC source especially amenable to building scale systems close to loads, continues to grow exponentially. New U.S. PV capacity grew over tenfold from 70 MW in 2005 to 880 MW in 2010, and more than doubled again to almost 2 GW in 2011. Nonetheless, in that year the U.S. was only the world's third largest market and was only about a third as big as world leading Germany [7]. In addition to PV, other emerging building scale generation involves DC directly, e.g. fuel cells, or in the electricity pathway, e.g. variable frequency microturbines.

Particularly interesting though, is the potential role of PEVs, which may prove to be a disruptive technology. While the effects of PEVs on the wider macrogrid are quite well studied, their interactions with building power systems where they will be interconnected has been much less rigorously investigated [8]. Not only will PEVs add to building loads, their availability for electricity storage offers a source of arbitrage on electricity tariffs and the fast response of batteries could be an attractive source of ancillary services either to buffer local variable generation, or to serve the macrogrid. It is instructive then to think of buildings and PEVs as a combined electrical system, whose evolution appears in Fig. 2.

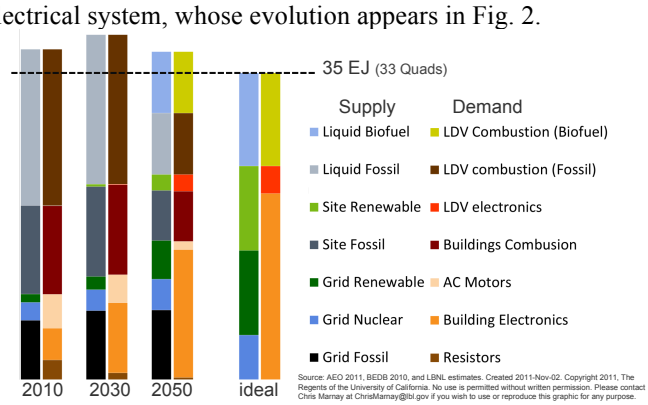

Fig. 2. Forecast energy consumption by buildings and light duty vehicles

The graphic shows pairs of stacked bars for various years. The left bar shows the supply side, and the right bar the demand side. Both are stacked in the same order as the legend. Looking first at the historic 2010 supply stack, the combined site energy consumption of buildings and light duty vehicles (LDVs) is supplied by several primary fuels. Macrogrid power used in buildings comes mostly (69%) from fossil fuels, with nuclear (21%) and a much smaller amount (10%) of renewables. Considerable fossil fuel (27% of building site energy) is burned on-site, primarily for heating. LDVs are currently powered almost exclusively by liquid fossil fuels, consuming 47% of the combined total. The demand stack has some resistive loads, incandescent lighting, electric water heating, etc., and significant AC only loads, primarily induction motors; however, electronic devices alone comprise 11% of building electricity use, and additionally, a significant fraction of other equipment uses DC at some point in the electricity pathway, as described above.

The 2030 bar pair shows the Energy Information Administration's *Annual Energy Outlook 2011 (AEO-2011)* forecast, by which time electronics alone are expected to surpass 20% of building electricity consumption. The 2050 bars are a best guess scenario based on non-rigorous extrapolation of trends seen in the AEO-2011 2030 forecast. On the supply-side, while fossil-fired generation continues to be significant, grid renewable generation almost triples, and nuclear also grows. The contribution of site renewable is still small (5%). Liquid biofuels are now providing fully half of LDV combustion fuels, but electric vehicles are also becoming significant. The small relative size of the LDV electronics bar, which represents PEVs is deceptive because electric vehicles are much more efficient than internal combustion ones in terms of site energy, i.e. km/kWh electric.

Finally, the ideal bars far right show the speculation of the authors on where the fuel consumption pattern of these two sectors should be heading. Not surprisingly, fossil fuels are driven out of the supply picture entirely, to be replaced by nuclear and renewables generation by the macrogrid, and by distributed renewables and liquid biofuels locally. On the demand side, the building and LDV electronics categories together dominate. Technological advances and the drive towards higher efficiency pushes more and more of electricity consumption into devices using DC at some point. In this scenario, local use of DC has risen to 60 of all energy, and local generation has risen to over a quarter of supply. This match-up together with the storage opportunity provided by the PEV batteries are the heart of the case for DC microgrids.

Increasingly, as the power system moves towards DC at both the generation bus and the ultimate load bus, and the two are sufficiently closely co-located, the case for AC diminishes. And in fact, the losses incurred by rectification and inversion of power together with problems related to managing the related heat output become insupportable. Removal of heat from data centers can comprise a third of its total energy consumption.

V. A DC μGRID DEMONSTRATION

Various demonstrations of DC μgrids under way in Japan include a demonstration that involves both multiple PQR and DC in Sendai. One notable pure DC μgrid example is at the Aichi Institute of Technology (AIT), in Toyota City, close to Nagoya [9]. And, a second center for DC research is at Osaka University. AIT has some generation resources installed, and

some modest loads connected to a DC bus. Fig. 3 shows one of the resources, a 10 kW vertical axis wind turbine, and Fig. 4 shows one of two 10 kW PV arrays that is also connected.

Fig. 3. Vertical axis wind turbine in the AIT DC µgrid

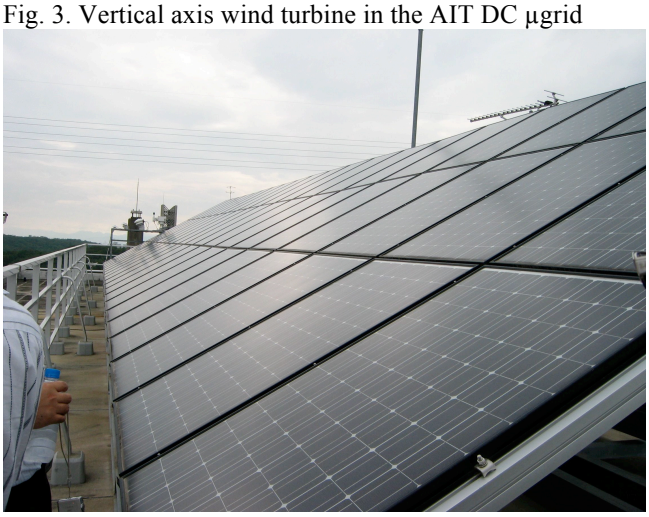

Fig. 4. PV array in the AIT DC µgrid

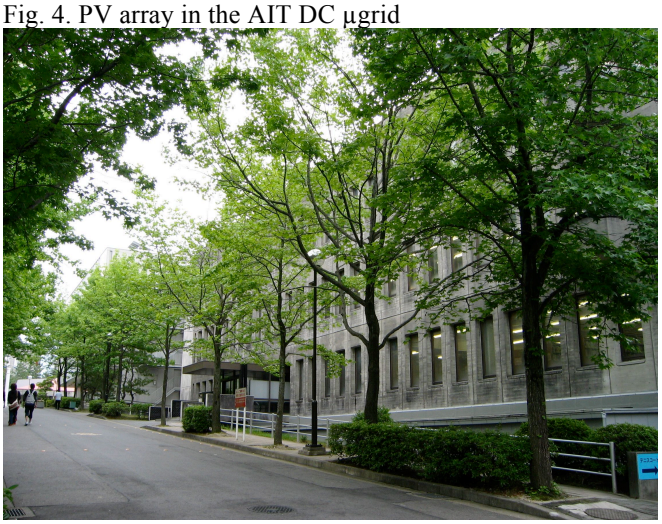

Fig. 5. Two buildings served by the µgrid

Fig. 6. The DC equipment testing laboratory

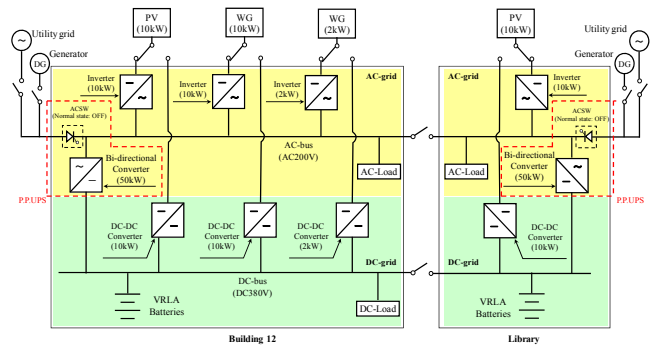

Fig. 7. One-line diagram of the DC µgrid

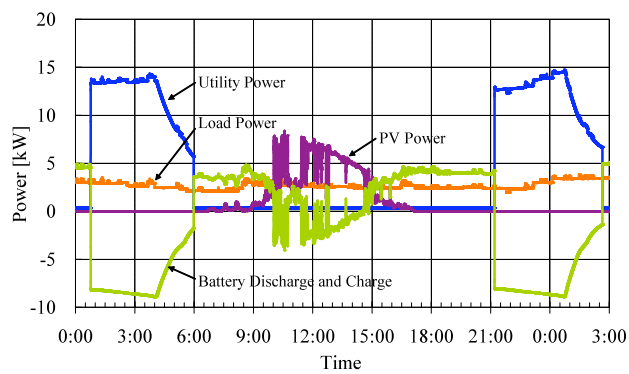

Fig. 8. A daily operating history

VI. Conclusion

The historic advantage of AC systems is being eroded by the changing character of both the supply and demand sides of electricity provision. Since much of both the supply and the load is likely to involve DC in the future, locally controlled DC µgrids able to function semi-autonomously are a promising emerging technology that can offer both PQR and efficiency benefits.

Our familiar legacy grid is a vast interconnected system. Changes such as adoption of DC, will have affects well beyond any individual building.

VII. Acknowledgment

The authors acknowledge the contributions of colleagues Karina Garbesi and Evangeloss Vossos who have completed related work on residential DC systems.

VIII. References

[1] R. Asad and A. Kazemi, "A Quantitative Analysis of Effects of Transition from AC to DC System, on Loads and Generation," *IEEE Smart-Grid Conf.*, 978-1-4577-2159-5/12, Washington DC, Jan. 2012.

[2] T. J. Blalock, "Ashland's Biltmore Estate," *IEEE Power & Energy Magazine*, vol. 10, no. 1, pp. 74-84, Jan./Feb. 2012.

[3] Gellings, C., W., & Yeager, K. E., "Transforming the Electric Infrastructure," *Physics Today, 57*(12), pp. 45-51.

[4] California Independent System Operator, Folsom CA, Integration of Renewable Resources: Operational Requirements and Generation Fleet Capability at 20 % RPS, 2010.

[5] California Public Utilities Commission, *Renewables Portfolio Standard Eligibility* (No. CEC-300-2007-006-ED3-CMF), 2008.

[6] U.S. Department of Energy, *The Potential Benefits of Distributed Generation and Rate-Related Issues That May Impede Its Expansio*n, 2007.

[7] Statistics, *Photon: The Photovoltaic Magazine*, vol. 1 2012, p. 111, Jan.

[8] M. Stadler C. Marnay, M. Kloess, G. Cardoso, G. Mendes, Afzal Siddiqui, R. Sharma, O. Mégel, and J. Lai, "Optimal Planning and Operation of Smart Grids with Electric Vehicle Interconnection," *Journal of Energy Engineering, (forthcoming).*

[9] H. Murai, T. Takeda, K. Hirose, Y. Okui, Y. Iwase, K. Yukita, K. Ichiyanagi, "A study on charge patterns for uninterruptible power supply system with distributed generators," *Telecommunications Energy Conference, 2009 - INTELEC 2009*.

IX. Biographies

Chris Marnay (M'90) is a Staff Scientist at LBNL, and leads microgrid research. He specializes in likely future adoption patterns of microgrids. He chairs the annual Symposium on Microgrids, and is Convenor of the CIGRÉ C6.22 Microgrids Evolution Roadmap Working Group. He holds an A.B. in Development Studies, an M.S. in Agricultural and Resource Economics, and a Ph.D. in Energy and Resources, all from the University of California, Berkeley.

Steven Lanzisera received the B.S. degree in electrical engineering from the University of Michigan, Ann Arbor, in 2002 and the Ph.D. degree in electrical engineering and computer sciences from the University of California, Berkeley, in 2009. His dissertation research focused on low-energy, networked technologies including the design of radios, communication protocols, embedded systems, and wireless networks. He was an Engineer with the Space Physics Research Laboratory, University of Michigan, from 1999 to 2002, where he worked on spacecraft integration and testing. He is currently a Research Scientist in the Environmental Energy Technologies Division at LBNL, where he studies energy use in buildings with a focus on distributed sensing, controls, and appliance energy efficiency. He has published research on embedded systems, wireless communication, networking, integrated circuits, building energy efficiency, and public policy.

Michael Stadler is a Research Scientist at LBN, and a leader in the analytical / mathematical research on distributed generation with and without CHP. He studied at the Vienna University of Technology, from which he holds a Master's degree in electrical engineering and a Ph.D. summa cum laude in energy economics. Michael published more than 130 papers, journal papers, reports, as well as five software tools in his 10-year career. In recent years, Michael has been focusing more on microgrids and smart grids as well as CHP, as an efficiency measure to reduce CO_2 emissions .

Judy Lai is a Principal Research Associate at LBNL. She has worked with commercial building lighting simulation and analysis, providing documentation and customer support for LBNL developed rendering software, and has also researched distributed energy resources for five years. She also organizes the annual international Symposiums on Microgrids. Judy has a B.A. in Architecture from U.C. Berkeley, and is currently pursuing an M.E.M degree at Duke University.