LBID- 128 c. 1

Lawrence Berkeley Laboratory

UNIVERSITY OF CALIFORNIA, BERKELEY

Engineering & Technical Services Division

RECEIVED
LAWRENCE
BERKELEY LABORATORY

NOV 26 1979

LIBRARY AND
DOCUMENTS SECTION

For Reference

Not to be taken from this room

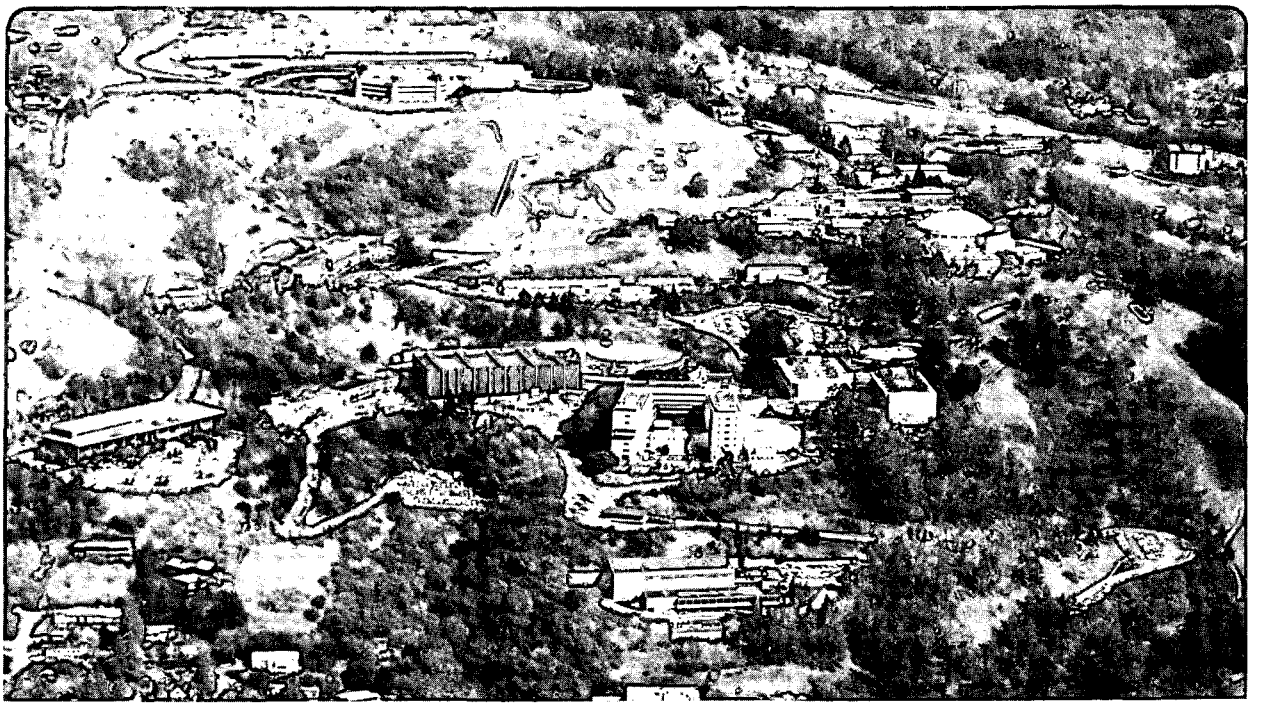

LBID-128 c.1

DISCLAIMER

This document was prepared as an account of work sponsored by the United States Government. While this document is believed to contain correct information, neither the United States Government nor any agency thereof, nor the Regents of the University of California, nor any of their employees, makes any warranty, express or implied, or assumes any legal responsibility for the accuracy, completeness, or usefulness of any information, apparatus, product, or process disclosed, or represents that its use would not infringe privately owned rights. Reference herein to any specific commercial product, process, or service by its trade name, trademark, manufacturer, or otherwise, does not necessarily constitute or imply its endorsement, recommendation, or favoring by the United States Government or any agency thereof, or the Regents of the University of California. The views and opinions of authors expressed herein do not necessarily state or reflect those of the United States Government or any agency thereof or the Regents of the University of California.

SUBJECT: PEP-4 - TIME PROJECTION CHAMBER

NAME: M. Nakamura, P. Martin, P. Robrish, R. Jared

DATE: February 2, 1978

This engineering note documents the preliminary design criteria for the Time Projection Chamber (TPC) to aid in the design and development of the electronics system. The physical, mechanical, electrical and gas characteristics of the Time Projection Chamber are described. It is assumed that the reader is familiar with the principles of the Time Projection Chamber,[1,2] and its general construction.

The Time Projection Chamber

The Time Projection Chamber (TPC) provides particle track recognition, momentum measurement and charged particle identification over most of 4π steradians. The TPC surrounds the beam pipe for a length of ±1 meter and extends radially to 1 meter. Each end of the TPC is constructed of six wedges, with ~180 dE/dX wires and ~900 pads per wedge. Each dE/dX wire and pad requires a preamplifier, amplifier shaper and charge-coupled device (CCD). The preamplifiers are placed inside the pressure vessel with the preamplifer output signals fed through high pressure connectors.

The TPC is filled with Argon-Methane gas at 10 atmospheres pressure, providing adequate ionization sampling thickness for particle identification. The dE/dX resolution is better than 3% rms. A resistor column establishes a uniform potential gradient for the electric drift field which is parallel to the magnetic field. The drift field requires a voltage of 190 ±40 kV at one end of the 1 meter long drift space. A drift velocity of 7 cm/μs is the design goal for the above conditions.

Each wire gives r and amplitude information, each cell or bucket in the CCD gives time Z and amplitude information, and several pads combine to give azimuthal Ø information. r, Z and Ø combined provide momemtum measurement and particle track recognition.

TPC Operating Conditions

$\vec{B}$	15 kG
Gas	80% Argon + 20% CH_4
E/P	0.2-0.3 (V/cm/Torr)
E	190 ±40 kV/m
Pressure	10 Atmospheres
Maximum Drift Distance	1 m
Momemtum Resolution	~0.6% XP (GeV/c)
Drift Velocity	7 cm/μs

TPC Operating Conditions (Continued)

Spatial Resolution	$\Delta Z = 2$ mm
	$\Delta\phi = \frac{150\ \mu m}{R}$
No. dE/dX sense wires	~1100 x 2 ≡ 2200
No. pads	~5400 x 2 ≡ 10800
No. wedges/end cap	6
No. dE/dX wires/wedge	~180
No. spatial wires/wedge	12

Mechanical and Physical Characteristics of TPC

Because of the rather severe environmental requirements and mechanical restrictions of the TPC, the following characteristics must be taken into consideration while designing the electronics. The 10 atmospheres pressure of the Argon-Methane gas will require high pressure connections or feed throughs to bring supply and signal wires in and out of the chamber. Fifteen cm of space within the TPC is allotted for the preamplifiers and their cabling at the ends of the wedges. A preamplifier is required for each pad and for each dE/dX wire, and a total of ~1100 preamplifiers at each end of a wedge and a total of about 13,500 preamplifiers for the entire TPC will be used. All components used in the preamplifiers must be able to withstand the 10 atmospheres pressure in the TPC.

The TPC feed throughs are mounted beyond the end cap calorimeter and above the inner pole tip. Feed throughs must also be provided for the inner drift chamber signal wires which is housed within the high pressure wall.

A continuous flow of Argon-Methane gas purges the chamber. Certain areas of the chamber will be considered "clean" and other areas, especially those surrounding the electronic components, will be declared "dirty." Partitions separate the "clean" gas from the "dirty" gas.

The identification of each wedge, pad and dE/dX wire follows a numerical sequence according to established rules. In Fig. 1, the 6 wedges, as seen from the "1" end of the chamber, are numbered 0 through 5 in a counter-clockwise manner starting at the reference line. The 12 wires with segmented cathodes are numbered continuously 0 through "n" in each row of pads beginning with 0 at the reference line and continuing counter-clockwise through each wedge until n is reached at the reference line. The dE/dX wires are numbered 0 through 179 beginning with 0 nearest the beam pipe and increasing to 179 at the outer extremities of the chamber.

Mechanical and Physical Characteristics of TPC (Continued)

Since a preamplifier is required for each pad and for each dE/dX wire, the signals from each preamplifier are identified and tagged according to the following plan. The pad signal is identified by row number and pad number within that row. For example, 1-03-39 is the 39th pad counting counterclockwise from the reference line in the 03 row on the "1" end of the chamber. Each dE/dX signal will be identified by wedge number and wire number; e.g., 1-4-108 is wire No. 108 in wedge 4, on the "1" end of the chamber.

A similar numbering scheme is used on the other end of the chamber which is called the "0" end.

Electrical Characteristics of TPC

Some of the electrical characteristics and considerations of importance are summarized.

Gas Gain	$10^2 - 10^3$
Pad Capacitance	3-5 pF
Signal for dE/dX wire	~200 electrons before gas gain
Pad Signal	~1/3 - 1/6 dE/dX wire signal
dE/dX and Pad Signal Width	100-350 ns
Pad Signal Resolution	~1% of mean
Wire Signal Resolution	~10% of gas gain of 10^2
Preamplifier Rise Time	20 ns

Coupled with the "TPC Operating Conditions" listed earlier, the above tabulation describes the important characteristics and parameters which must be considered in the design of the electronics for TPC.

The form of the shaping for the amplifiers preceding the CCD's has yet to be determined, but it should have some form of gain control. It must be capable of obtaining the necessary position (ΔZ) and total charge (ΔE) information simultaneously. The simultaneous solution of these two variables will require compromises yet to be determined.

One approach is to use a gated integrator that would place in the CCD the total charge accumulated in each CCD fast clock period. This approach would give, after read out, the profile of the current pulse coming from each wire and would lead to a simple program that could determine the summation

Electrical Characteristics of TPC

(ΔE energy), first moment, (ΔZ position) and second moment (is there an adjacent track?). The period of the gated integrator must match that of the fast CCD clock. In order to allow flexibility in the setting of the fast clock period, the clock must control the gated integrator period.

A second approach would be to use single delay line shaping with suitable integration. If the delay line has a delay time (2 ΔT) equal to the CCD sampling period, this approach is very similar to the gated integrator. If the delay time is less than the CCD period, charge would be lost and if it is longer, corrections would be needed in the summation because some charge would be counted two or more times.

A third approach would be to use some form of RC shaping which is comparatively inexpensive and simple, but will probably place more load on the computer that reduces the data. In this case the shape of the signal pulse is recorded by sampling its amplitude at several points on the wave forms and then reconstructing the wire current pulse in the computer.
The steps needed in the computer could be as follows:

1. Fit a curve to the CCD output.

2. Deconvolute the impulse response of the shaping amplifier from the fitted curve to obtain the wire current wave form.

3. Find the area (ΔE), mean (ΔZ) and second moment (is there an adjacent track?) of the wire current.

The applicability of this approach probably depends on finding simple ways to do 1, 2 and 3 above.

Figure 2 is a simplified diagram showing each pad or dE/dX signal coupled to a preamplifier and its corresponding shaper-amplifier. The shaper amplifiers are partitioned 8 to a board with a trigger signal generated by a discriminator for each signal channel. The trigger pulse is used in majority logic to obtain TPC fast and slow triggers. A 4-bit register is computer controlled to adjust the threshold of the discriminator. All"ones" in the 4-bit register inhibit a trigger signal from being generated. Test pulses are injected into the preamplifier and shaper-amplifier so that malfunctions in the system can be traced to the nearest board. Each of the output circuits must drive 50 Ω terminated cable.

Figure 3 shows 32 CCD's multiplexed into a single analog-to-digital converter (ADC). The CCD's are partitioned 16 CCD's to a board with two boards feeding a single ADC. Test pulses are injected into each CCD. A computer controlled 4-bit register adjusts the offset from each CCD to equalize minor variations of the CCD's. Another computer controlled 4-bit register adjusts the threshold of the non-zero detect discriminator so we can process only wanted events and speed up the readout process. This also saves memory space in the Large Data Bufffer (LDB). When this register is filled with "ones", it inhibits the non-zero detect signal and allows one to bypass any given CCD

Electrical Characteristics of TPC (Continued)

signal channel. On the other hand when this register is filled with "zeros" the CCD signal channel is always activated regardless of the signal amplitude from the CCD.

The local controller receives and sends a number of signals from and to various parts of the system. The non-zero detect signal alerts the ADC to convert. The end of convert (EOC) signal from the ADC tells the controller that the conversion is done. The controller flags the "Ordering Logic and Bus Control" and sends the data along with an identification (ID) word describing the dE/dX or pad signal orgin. A double buffered system may be required.

The pads are ordered in the manner shown in Fig. 4. The 32 pad signals shown in Fig. 3 are selected from the "O" pads indicated and fed into a single ADC. This scheme was selected so that the probability of processing all 32 CCD's (within the allotted time due to the CCD characteristics) will be minimal. This alleviates the problem of handling the large number of signals from the outer chords of pads that are pulsed simultaneously. This ordering scheme is used only for purposes of multiplexing pads into single ADC's and should not be confused with the signal origin numbering scheme described earlier in this note. (see Fig. 1)

References

1. "Proposal for PEP Facility Based on the Time Projection Chamber,"PEP-4, December 30, 1976, JHU, LBL, UCLA, UCR, and Yale U.

2. "The Time Projection Chamber Facility at PEP and Prospects," a collaborative group of JHU, LBL, UCLA, UCR, and Yale U, presented at Nucl. Sci. Symposium, San Francisco, October 1977.

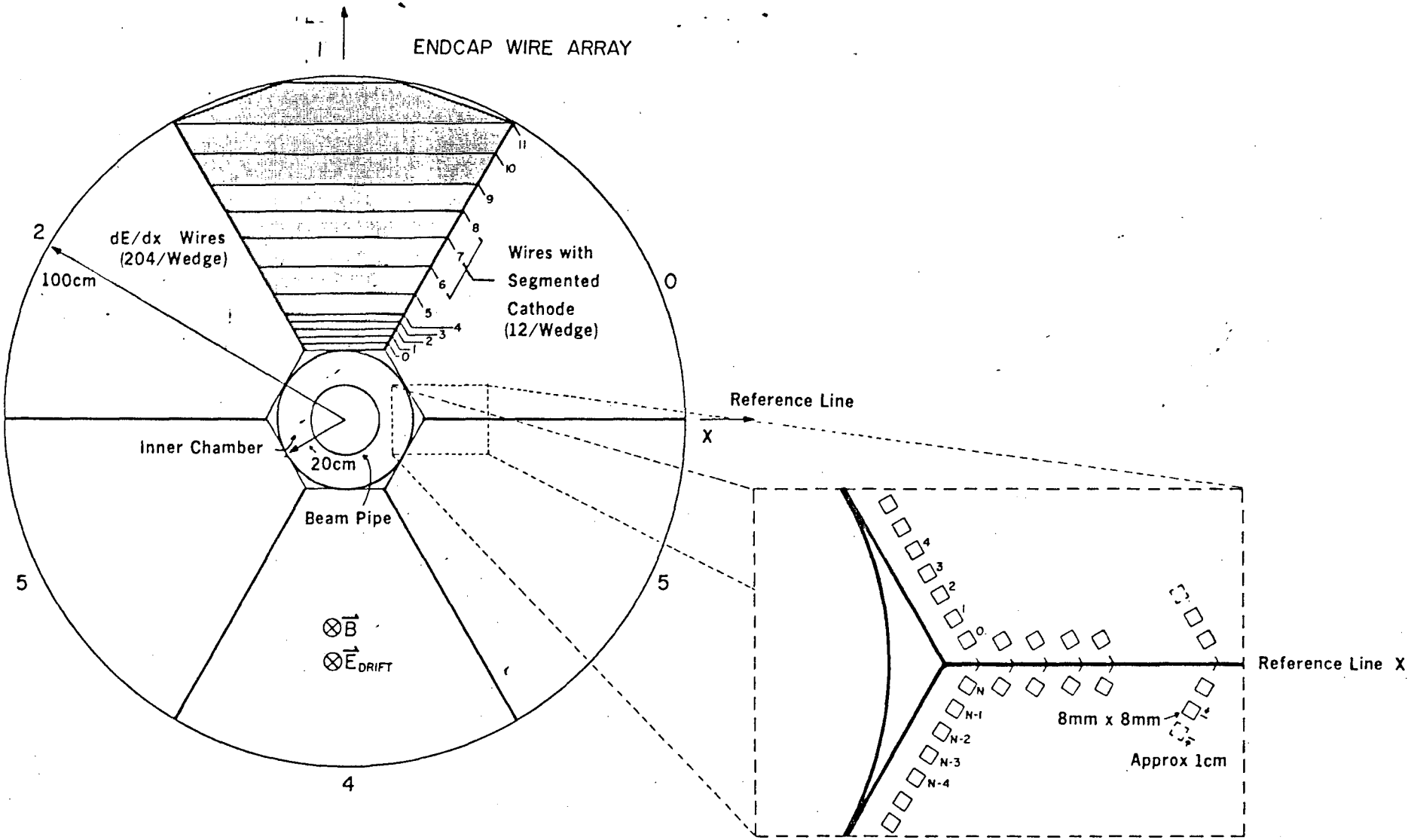

END VIEW OF TPC FROM "I" END OF CHAMBER

Figure 1

XBL 781-6727

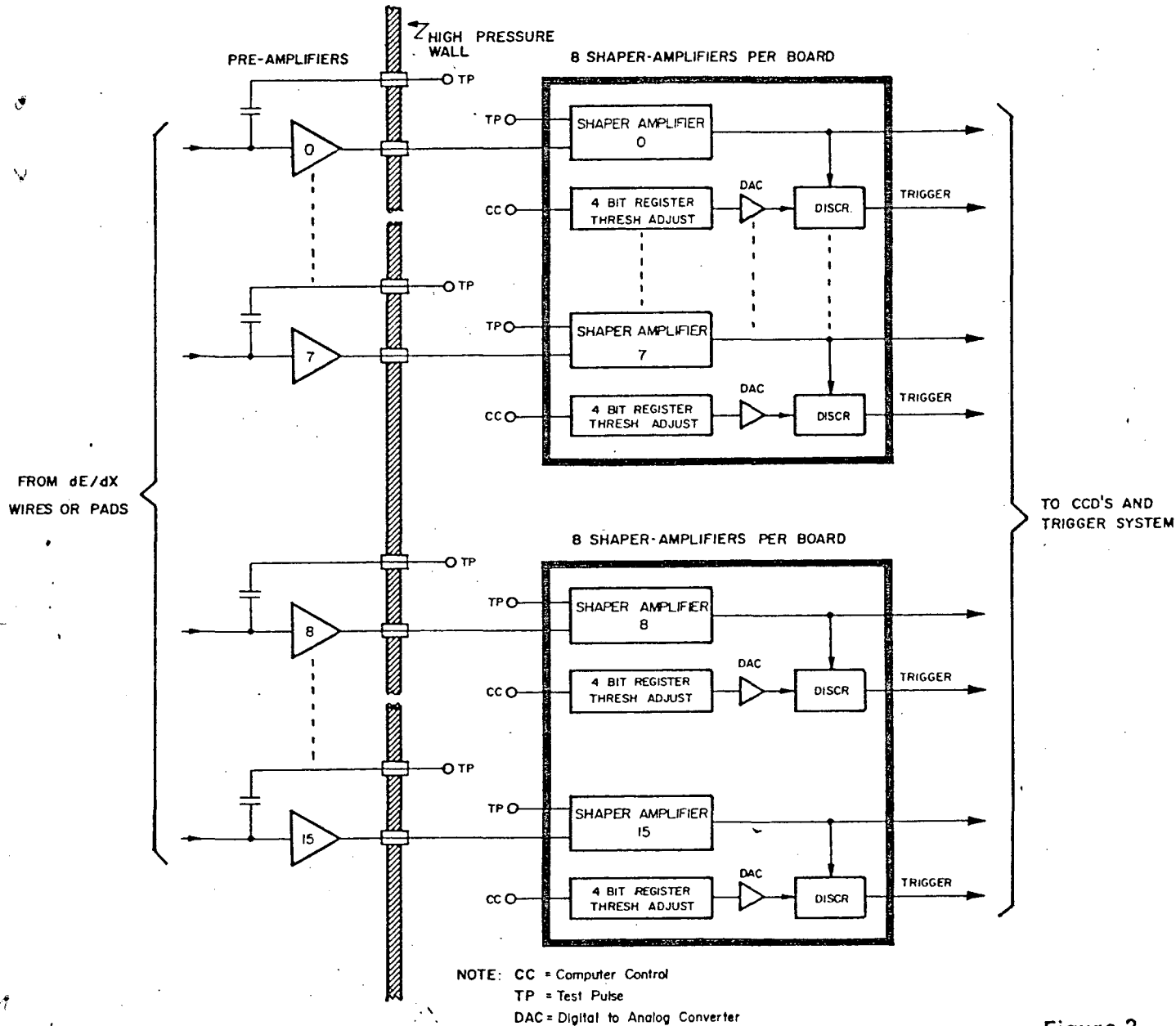

Figure 2

XBL 781-6726

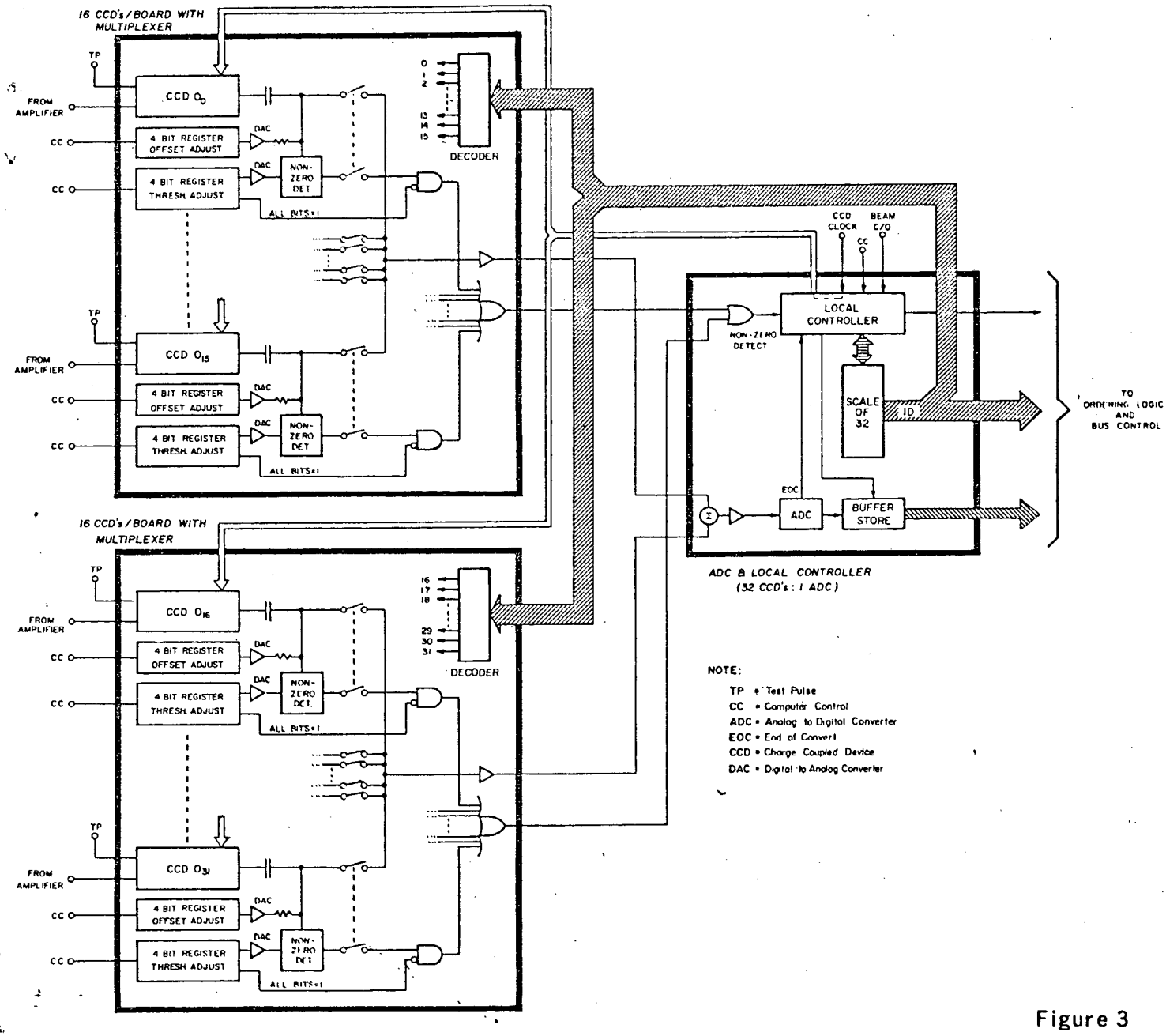

Figure 3

XBL 781-6728

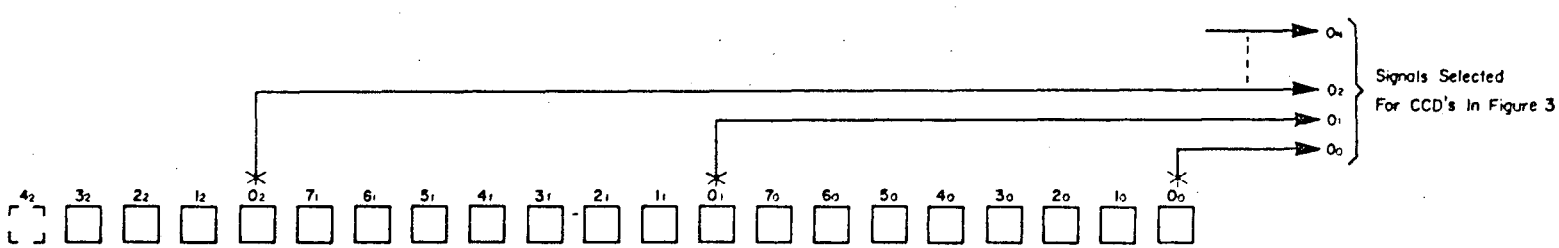

Figure 4

XBL 792-7027

This report was done with support from the Department of Energy. Any conclusions or opinions expressed in this report represent solely those of the author(s) and not necessarily those of The Regents of the University of California, the Lawrence Berkeley Laboratory or the Department of Energy.

Reference to a company or product name does not imply approval or recommendation of the product by the University of California or the U.S. Department of Energy to the exclusion of others that may be suitable.

TECHNICAL INFORMATION DEPARTMENT
LAWRENCE BERKELEY LABORATORY
UNIVERSITY OF CALIFORNIA
BERKELEY, CALIFORNIA 94720