LBID-129 c.1

Lawrence Berkeley Laboratory

UNIVERSITY OF CALIFORNIA, BERKELEY

Engineering & Technical Services Division

RECEIVED
LAWRENCE
BERKELEY LABORATORY

NOV 26 1979

LIBRARY AND
DOCUMENTS SECTION

For Reference

Not to be taken from this room

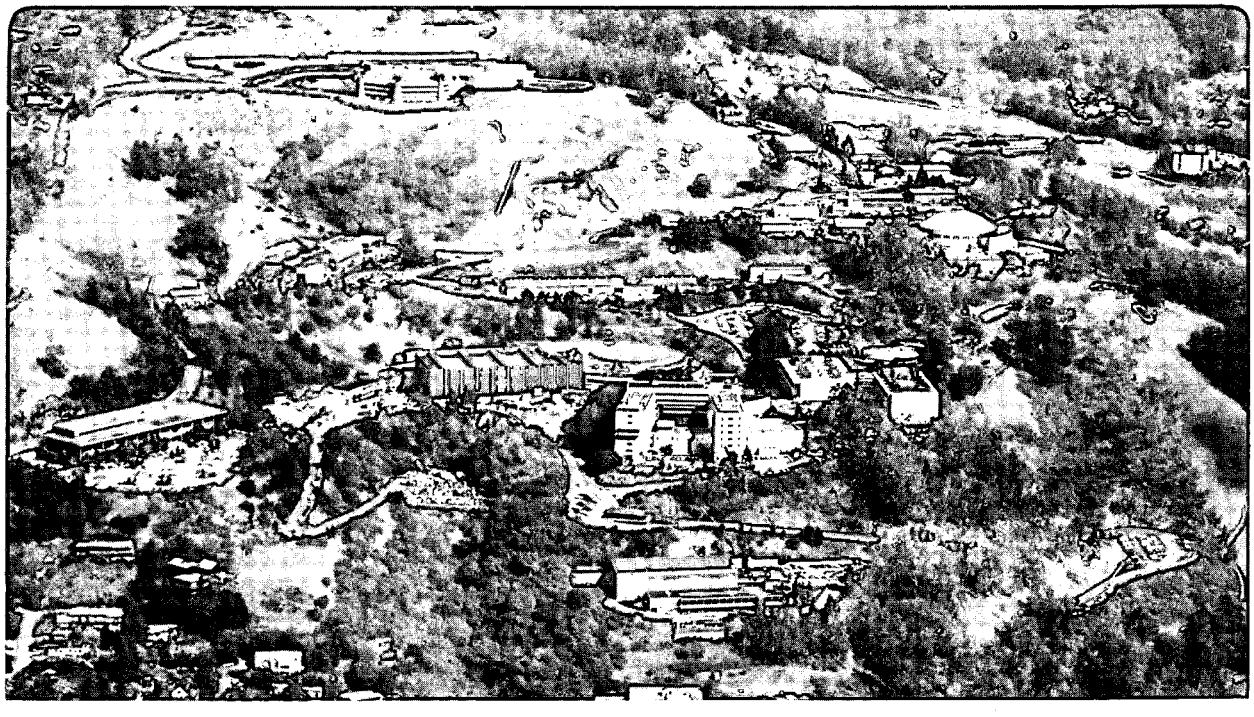

LBID-129 c.1

DISCLAIMER

This document was prepared as an account of work sponsored by the United States Government. While this document is believed to contain correct information, neither the United States Government nor any agency thereof, nor the Regents of the University of California, nor any of their employees, makes any warranty, express or implied, or assumes any legal responsibility for the accuracy, completeness, or usefulness of any information, apparatus, product, or process disclosed, or represents that its use would not infringe privately owned rights. Reference herein to any specific commercial product, process, or service by its trade name, trademark, manufacturer, or otherwise, does not necessarily constitute or imply its endorsement, recommendation, or favoring by the United States Government or any agency thereof, or the Regents of the University of California. The views and opinions of authors expressed herein do not necessarily state or reflect those of the United States Government or any agency thereof or the Regents of the University of California.

SUBJECT: Trigger System, Digital Meantimer For the Inner Drift Chamber (IDC) - (PEP 4)

NAME: Eliahu Nadav
DATE: 11-16-78

This note summarizes the main features of a digital mean-timer and its application in deriving the IDC component of the pre-trigger (PT) from signals of the inner drift chamber.

Introduction

The IDC trigger eletronics distinguishes valid signals from background by two features:

A. The track should be radial (in the projection on the end-cap) within an angle $\Psi \leq \pm 5^0$. This is performed by the coincidences (a·c) and (b·d).

B. A tight time correlation should exist between the signals and the BCO. A coincidence between a delayed BCO (BCOD) and the output of a meantimer discriminates against radial cosmic-ray tracks.
The meantime of the signals of the drift chamber has certain spread in time due to several factors as follows:

1. The angle of deflection from radial $\pm \Psi$.

2. The range of the Ψ effect is a function of the angular position of the track ϕ (that is so because the difference in drift time between outer and inner layers is only partially compensated for by a fixed delay in the path of the inner layer's signal).

3. The angle Θ of the tracks relative to the Z axis of the TPC. Alternate layers are brought out to opposite sides of the TPC, and the difference in propagation along the sense-wires ($\pm$5ns) is introduced as an error. Since the error is almost symmetrical, its effect is equivalent to a slight increase in the radius of the drift chamber.

4. All sorts of random noise, which result in time-jitter ε of the relevant signals with respect to the BCO, as discussed later.

   Optimized operating conditions for the meantimer have been found so that variations in the meantime will not degrade the trigger efficiency while maintaining the background trigger rate minimal.

An additional requirement from the meantimer is a capability of double pulse resolution of about 50 msec.

Basic Characteristics of the Digital Meantimer

1. Figure la illustrates the basic scheme of a meantimer; the timing diagram if Fig. lb defines the relations of the input signals (A & B) and the clock (ck & $\overline{ck}$) to the beam cross-over (BCO). The time of the meantimer output ($MTMR_o$) is then given by: $To = 1/2(N+m+n)Tck$, where:

N = number of bits in the shift register,
"m" is defined by: $0<[mTck - Ta]<Tck$, and
"n" is defined by : $0< [nTck - (TB-1/2Tck)] <Tck$.

The equation is valid provided that: $|n-m| < N-1$, and this defines the range of the meantimer.

2. The presence of random noise ($\pm\varepsilon$time jitter) leads to output signal fluctuations. When a clock transition is inside the noise range of each input signal (and the noise peaks are smaller than $\pm$ 1/2 Tck), the output will fluctuate in a range of 1/2 Tck.

3. When the clock is non-synchronized with the BCO, and its phase is random, the output timing will fluctuate in a range of up to Tck. That is because usually both the ck and the $\overline{ck}$ may coincide with the noise range of the corresponding input signals (see Fig. 2).

4. For convenience of later analysis of the optimal alignment of the meantimer, the valid tracks are arranged in a sort of "bunches," (see Fig. 3). .The tracks with the same drift time to the c sense-wire (Tb) are grouped in a bunch which may be characterized by an "Average" track ($TB;TA_{AV}$) associated with symmetrical deviations ($\pm$ ΔTA) from the mean drift time). A second case of optimal alignment is referenced to an "Offset Average" track ($TB; TA'_{AV}$) with $\Delta TA+ \neq \Delta TA-$.
(The description neglects the dependence of ΔTA on ϕ ; therefore, $\Delta TA(\phi;\Psi)_{max}$ should be considered for the worst case.)

5. For the conditions: a. $TA_{AV} + TB = const.$
b. The clock is synchronized to the BCO
c. Tck = const.
There is an optimal alignment of the clock phase, so that the output time spread is minimized. See Fig. 4.

6. For a given range of variation in the meantime of the inputs, there is a maximal clock frequency for which the output spread is only a 1/2 Tck for all $\phi \pm \Psi$ angles (provided that the phase is optimized according to 5 above).

7. As the clock is synchronized, the output transitions occur at discrete times refered to the BCO. And, gating the output with a properly delayed BCOD for a duration 1/2 Tck $< \Delta T_{BCOD} <$ 3/2 Tck, will select all the valid trigger signals.

8. For the conditions specified in 5,6 and 7 above, the random background trigger rate (non BCO related) is determined by a time window T_{RI} = Tck (resolving time for random inputs).

9. The relations of the above mentioned parameters of the meantimer are illustrated in Fig. 5. From the nomograph, it becomes evident that no advantage is gained by increasing the clock frequency beyond the limit of line 2: T_{RO} = 1/2 Tck, unless the random noise time-jitter is found to be considerable component.

10. There are two types of random noise in the systesm:

    a. A conventional physical noise affecting each channel.
    b. The statistics of the propagation times of various signals in a system of 120 channels.

The elements whose relative accuracy contributes to the second type of noise are listed below:

1. Geometry of the cells of the drift chambers.
2. The electric field in each cell.
3. Signal propagation along the strings: Amplifier, 100 feet of cable,discriminators, AND (or OR) circuit.
4. Propagation of the ck and $\overline{ck}$ through buffers to individual shift registers.
5. Propagation of BCOD to individual meantimers.

System Organization

Block diagrams of the system are given in Figures 6, 7, and 8. The 60 IDC channels occupy 15 cards (4 channels per card = 8 meantimers per card). The test input pulses distribution gives access to each meantimer through on-card channel decoding and a card decoder on a Test Control Card. The outputs of the meantimers are multiplexed and brought to a single latch on the Control card for read-out. The output's addressing may be separate from that of the Test input's to facilitate checking of cross-talk.

A card with all the timing control circuits (clock, BCOD and clear) will be placed in the middle of the bin for minimizing propagation times. Computer control through D to A converters is applied to optimize the clock frequency and phase and the BCOD time and width.

Monitoring of Optimal Timing Alignment

An output of one meantimer on each card (15 in total) and the BCOD signal are brought out to a Time Digitizer of a multi-stop type, which is started by the BCO (Fig. 9). The data are read-out and processed to give a Delay Curve. Optimal alignment of the clock frequency and phase are achieved when the Delay Curve is maxmized, and the position of BCOD should match the Delay Curve peak. A phase-locked-loop is thus established for long term stability. Four bit resolution for the time digitizer is sufficient and the data processing could be handled by a microprocessor.

Performance of a Prototype Meantimer Card

A prototype card has been built using wire-wrap technology and Schattky logic ('s). At lower clock frequencies some of the I.C.'s may be replaced by their Low Power Schottky ('LS) counterparts for saving power and heat dissipation.

1. Maximum clock frequency: ('S) - 45 MHz, ('LS) - 35 MHz.

2. Double Pulse Resolution:

   a. With flip-flop input - 1 1/2 Tck average.
   b. With retriggerable input shaper - Tck.

3. Clock frequency stability: < 0.1%.

4. Clock and BCOD propagation time errors: ~ $\pm$1 nsec.

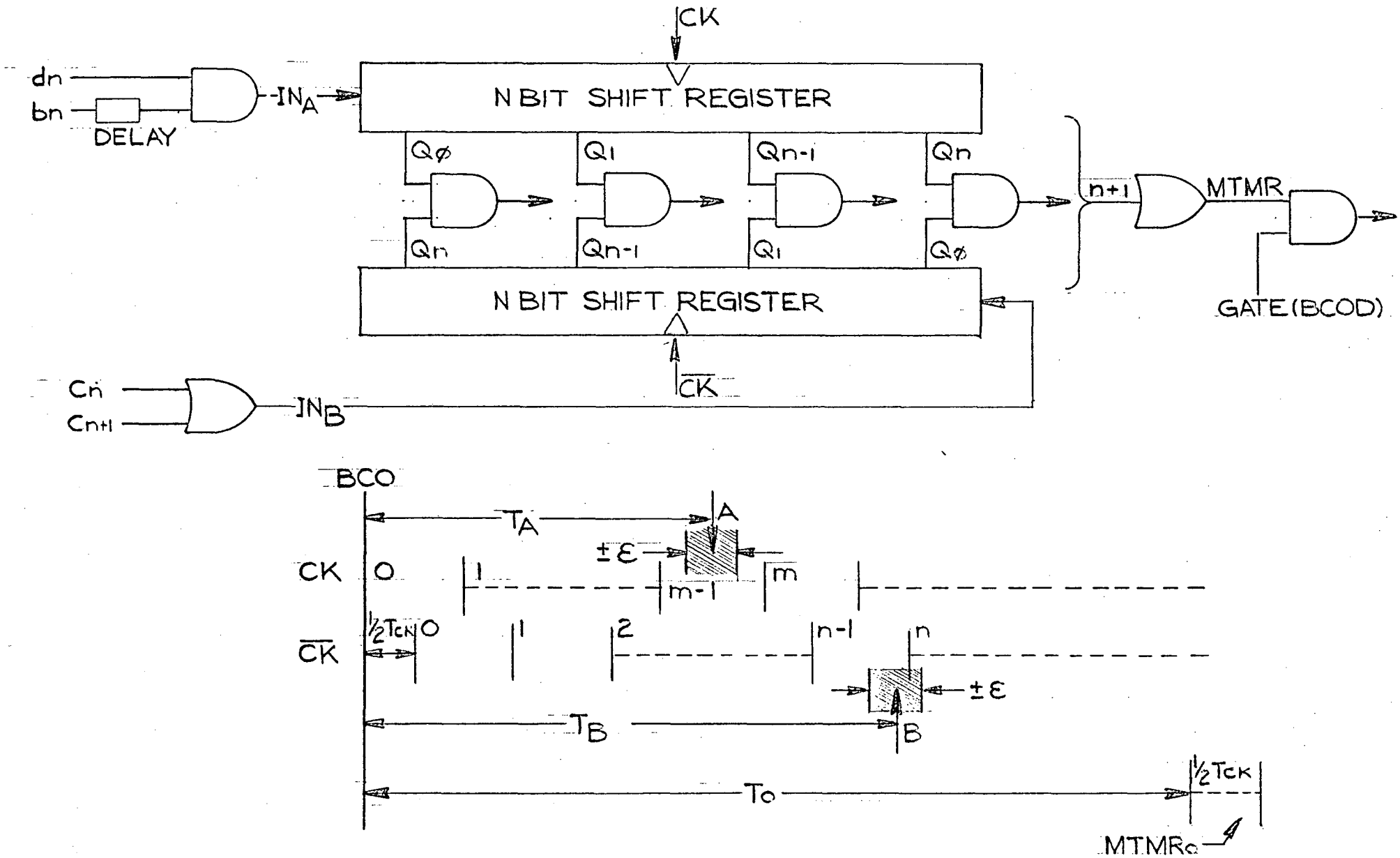
CK
dn
bn
DELAY
IN_A
N BIT SHIFT REGISTER
Qφ
Q1
Qn-1
Qn
n+1
MTMR
GATE (BCOD)
N BIT SHIFT REGISTER
CK
Cn
Cn+1
IN_B
BCO
T_A
A
±ε
CK
0
1
m-1
m
½Tck
0
1
2
n-1
n
CK
±ε
T_B
B
½Tck
To
MTMRo

FIG. 1.

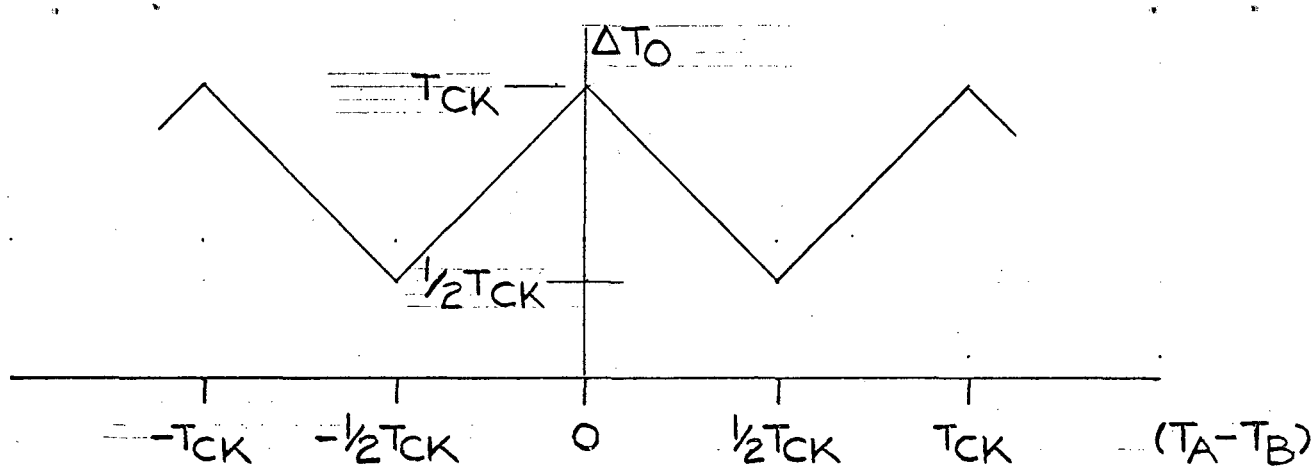

$$\Delta T_O = \tfrac{1}{2}T_{CK} - [KT_{CK} - (T_A - T_B)]\,;\ \text{FOR } 2K(\tfrac{1}{2}T_{CK}) \le (T_A - T_B) < (2K+1)\tfrac{1}{2}T_{CK}$$

$$\Delta T_O = \tfrac{1}{2}T_{CK} + [KT_{CK} - (T_A - T_B)]\,;\ \text{FOR } (2K-1)(\tfrac{1}{2}T_{CK}) \le (T_A - T_B) < 2K(\tfrac{1}{2}T_{CK})$$

$$K = 0, \pm 1, \pm 2, \ldots$$

FIG. 2. OUTPUT TIME FLUCTUATIONS OF MEANTIMER WHEN CLOCK PHASE IS RANDOM IN RESPECT TO BCO.

FIG. 3. GROUP OF VALID TRACKS HAVING THE SAME T_B

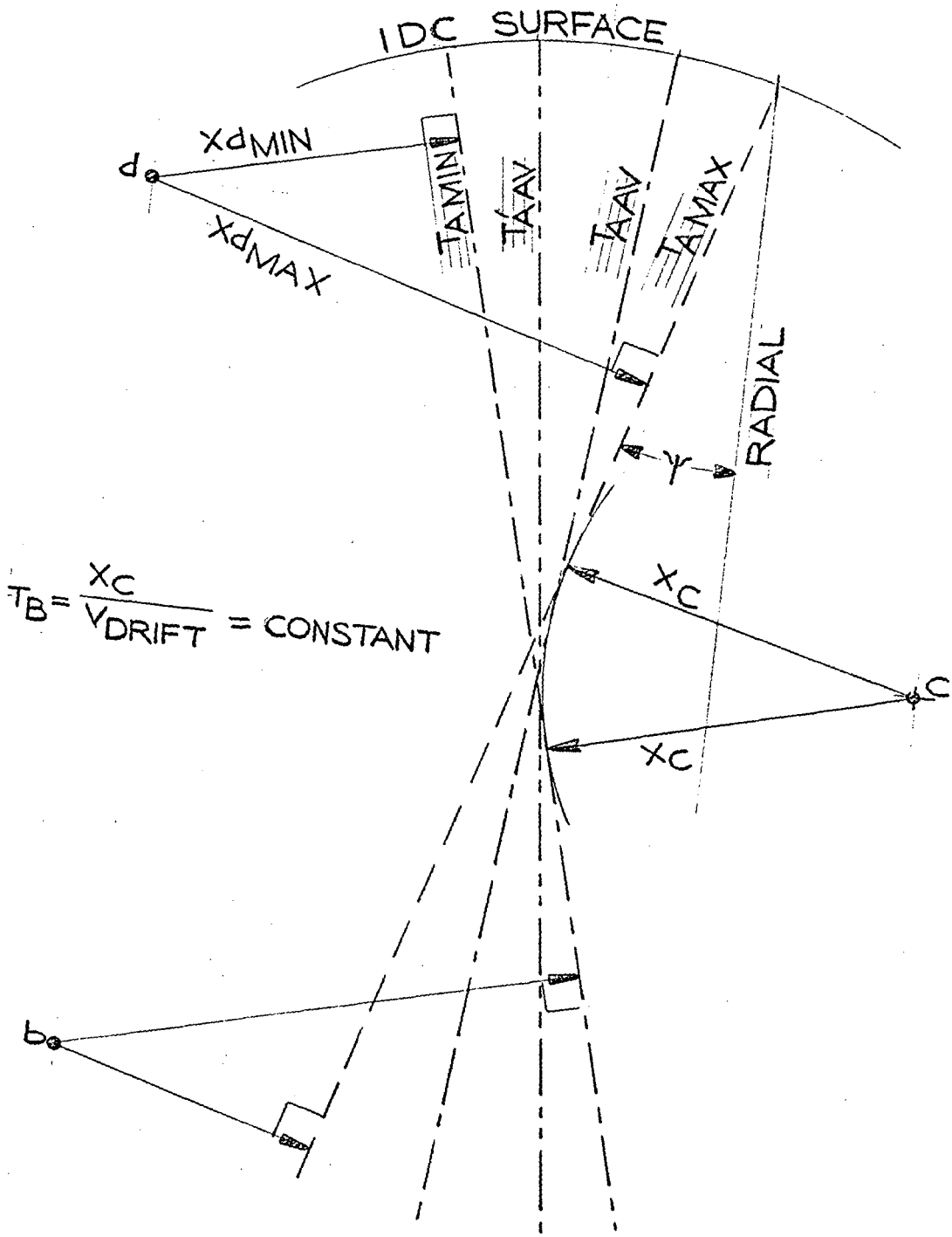

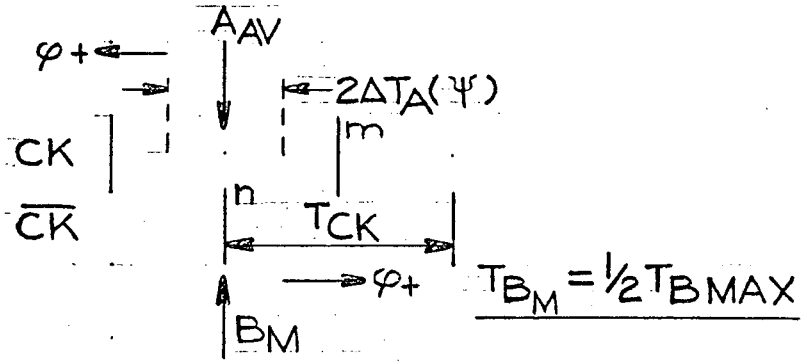

a. OPTIMAL ALIGNMENT FOR

$\Delta T_0 \leq \frac{1}{2} T_{CK} + K T_{CK}$

$T_{A_{AV}} = T_{B_M}$; $\Delta T_{A+} = \Delta T_{A-}$

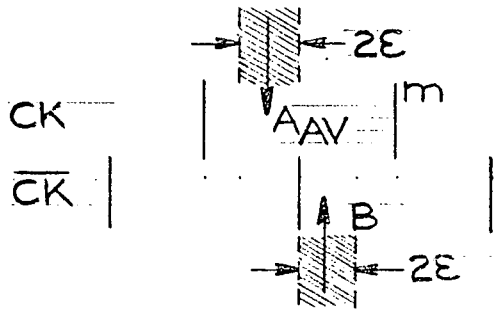

b. WORST CASE: $\Delta T_0 \leq \frac{1}{2} T_{CK}$

$\Delta T_A(\Psi) + 2\varepsilon \leq \frac{1}{2} T_{CK}$

$\Delta T_{MAX} \leq T_{CK} - 4\varepsilon$

$\Delta T_A = 0 \Rightarrow \varepsilon \leq \frac{1}{4} T_{CK}$; $\varphi_W = \varphi_M \pm \varepsilon$

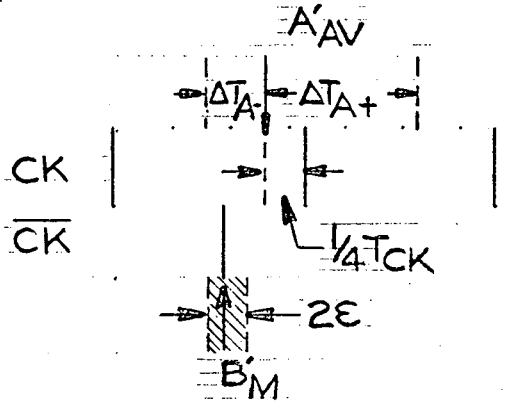

c. OPTIMAL ALIGNMENT FOR

$\Delta T_0 \leq (K+1) T_{CK}$ $\quad \Delta T_{A+} \neq \Delta T_{A-}$

$T'_{A_{AV}} - T'_{B_M} = \frac{1}{4} T_{CK}$

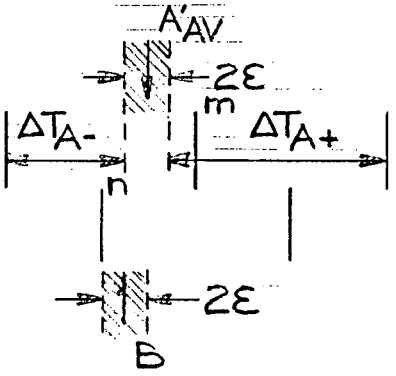

d. WORST CASE: $\Delta T_0 \leq T_{CK}$

$\Delta T_{MAX} = \Delta T_{A-} + \Delta T_{A+} = 2T_{CK} - 2\varepsilon$

$\varphi_W = \varphi_M + \varepsilon$

$\Delta T_A(\Psi) = 0 \Rightarrow \varepsilon \leq \frac{3}{8} T_{CK}$

FIG. 4

FIG. 5. MEANTIMER TIME RESOLUTION: SYNC. CK.

T_{RI} = INPUT TIME WINDOW WIDTH FOR BACKGROUND.
$\Delta T_{MAX} = T_A(\Psi)_{MAX} - T_A(\Psi)_{MIN}$; WHEN T_B CHOSEN AS REFERENCE.

T_{RO} - SELECTED TIME WINDOW ON OUTPUT OF MEANTIMER.

① $T_{RO} = 0 \Rightarrow \Delta T_{MAX} = 0;\ \varepsilon = 0;\ T_{RI} = \frac{1}{2} T_{CK}$ *

② $T_{RO} = \frac{1}{2} T_{CK} \Rightarrow \Delta T_{MAX} < T_{CK} - 4\varepsilon;\ T_{RI} = T_{CK};\ (\varepsilon < \frac{1}{4} T_{CK})$

③ $T_{RO} = T_{CK} \Rightarrow \Delta T_{MAX} < 2T_{CK} - 2\varepsilon;\ T_{RI} = 2T_{CK};\ (\varepsilon < \frac{3}{8} T_{CK})$

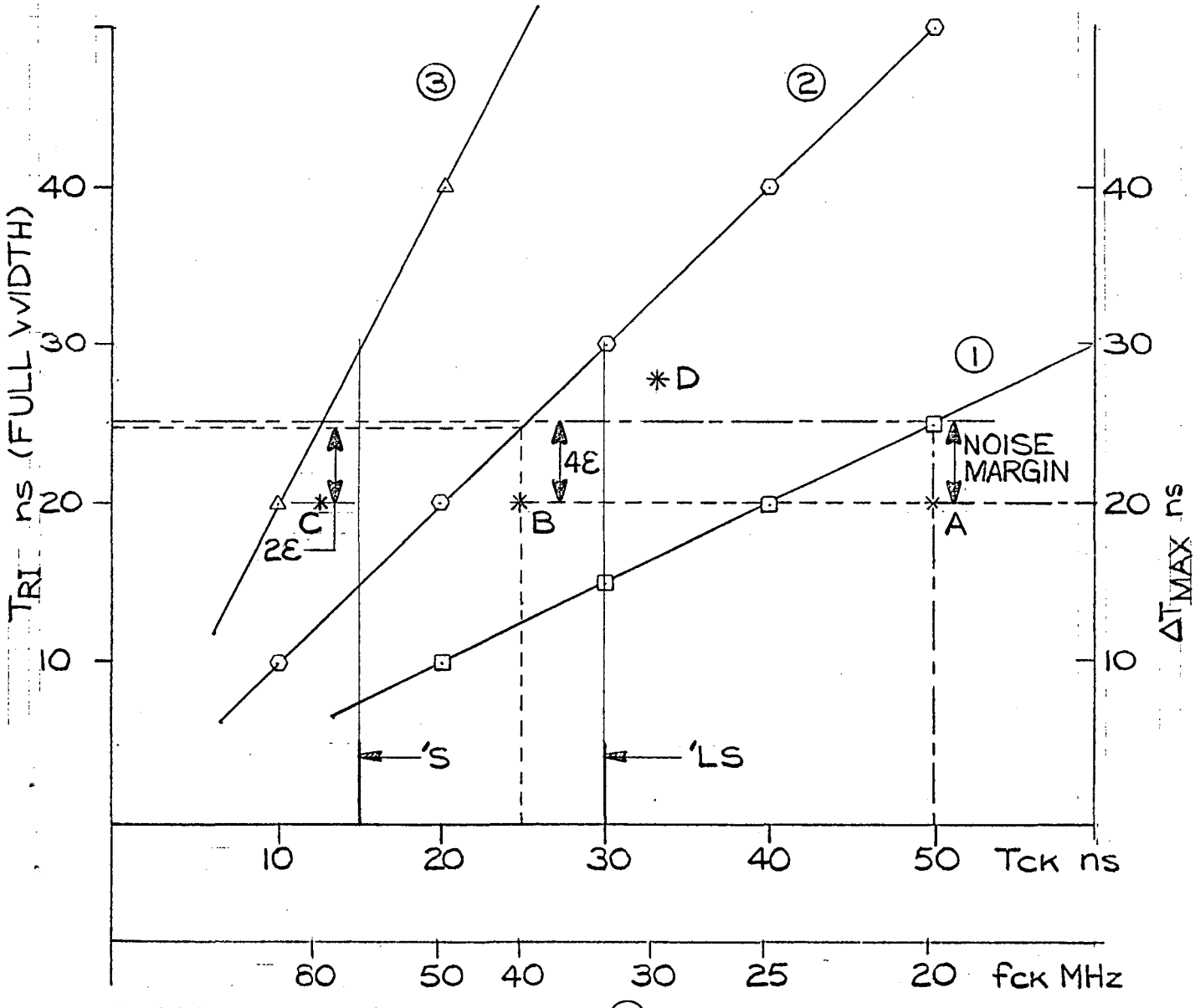

* COMMENTS: IN CONDITION ① THERE ARE SINGULAR POINTS (φ_S) WHERE VALID TRACKS ARE LOST ($\varepsilon > 0$; $\Delta T_{MAX} > 0$). T_{RI} IN EACH CASE IS AN AVERAGE VALUE.

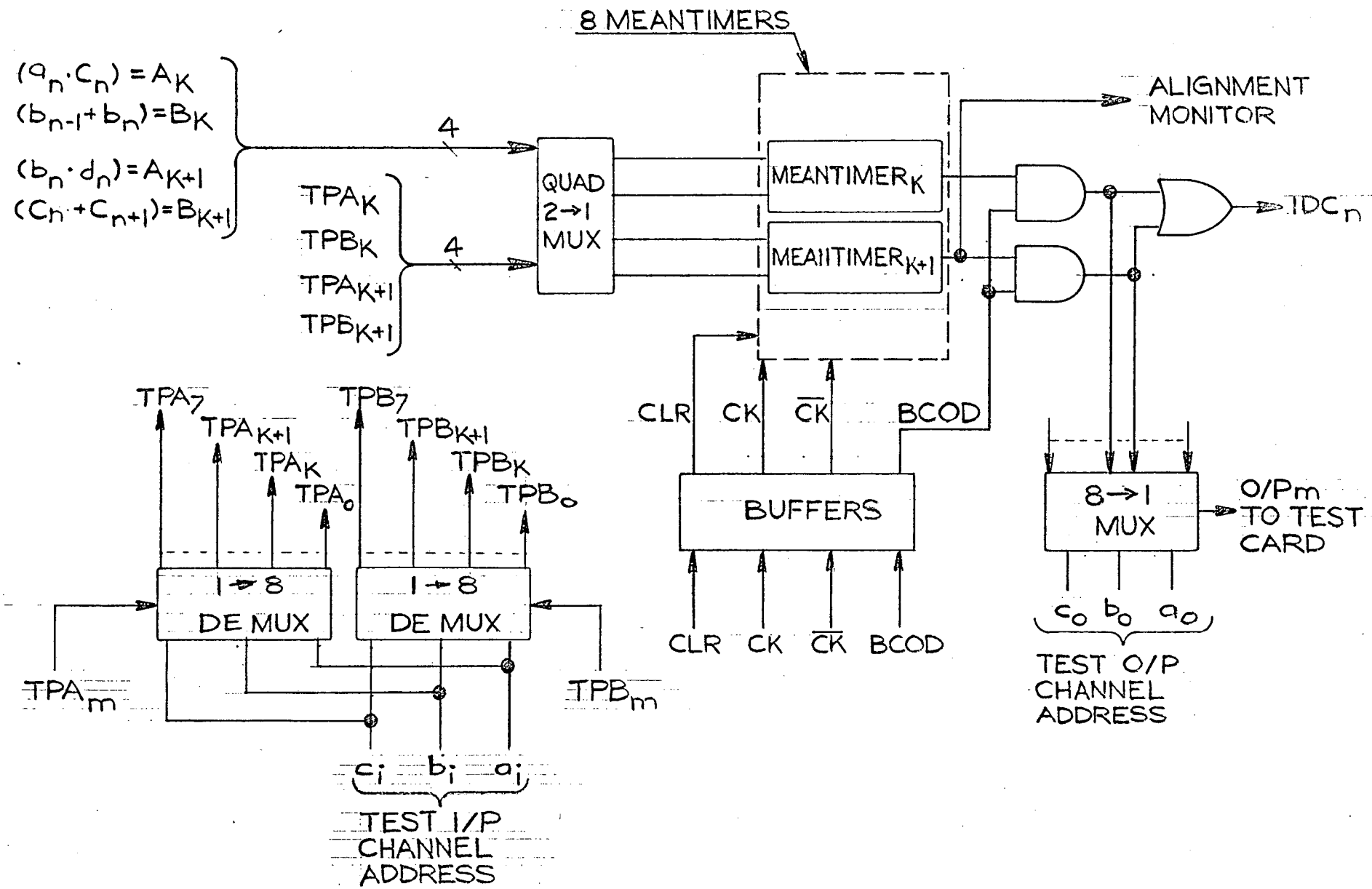

FIG. 6. MEANTIMER CARD 4 IDC CHANNELS

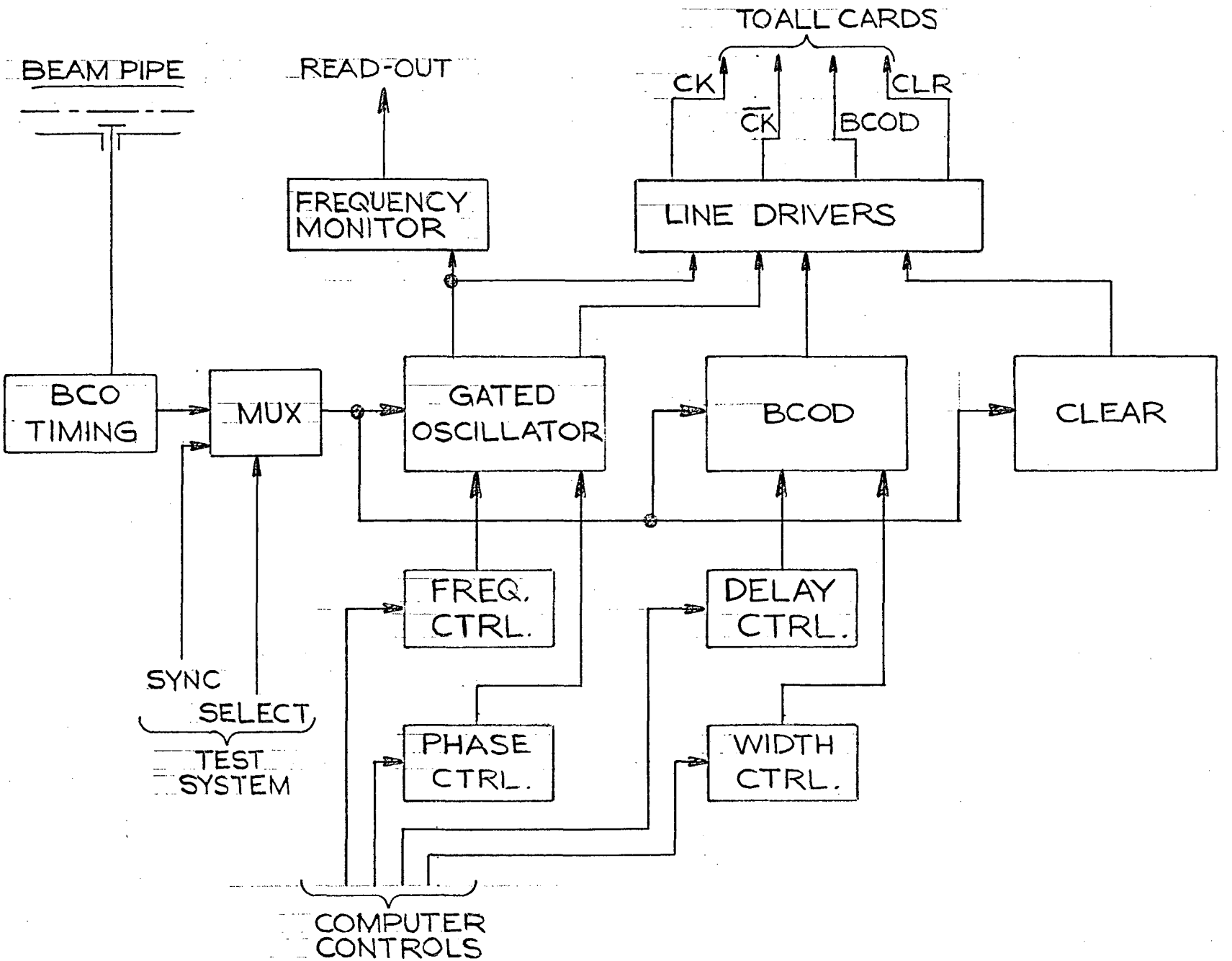

FIG. 7. OSCILLATOR & TIMING CARD

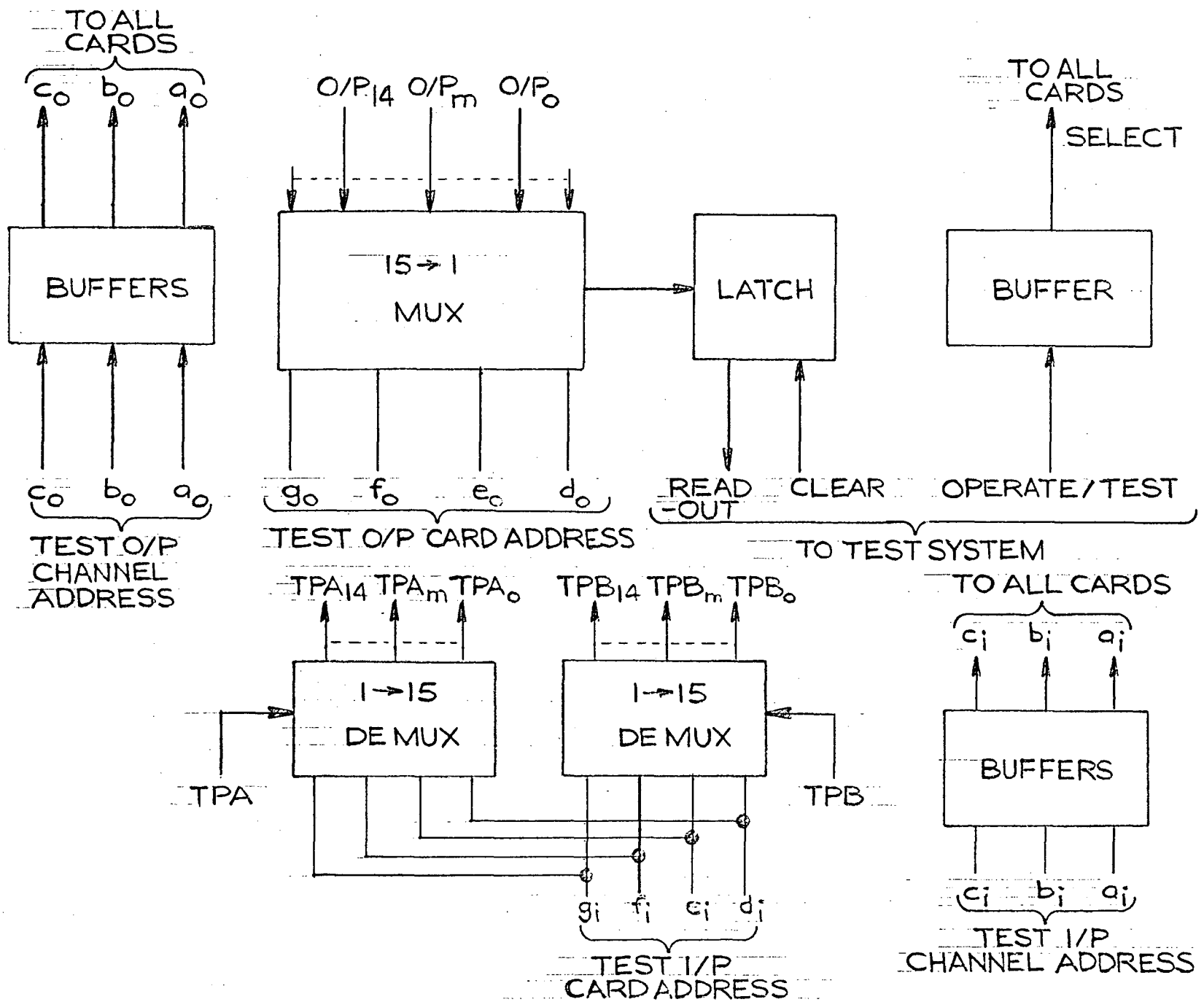

FIG. 8. TEST CONTROL CARD

This report was done with support from the Department of Energy. Any conclusions or opinions expressed in this report represent solely those of the author(s) and not necessarily those of The Regents of the University of California, the Lawrence Berkeley Laboratory or the Department of Energy.

Reference to a company or product name does not imply approval or recommendation of the product by the University of California or the U.S. Department of Energy to the exclusion of others that may be suitable.

TECHNICAL INFORMATION DEPARTMENT
LAWRENCE BERKELEY LABORATORY
UNIVERSITY OF CALIFORNIA
BERKELEY, CALIFORNIA 94720