ENGINEERING NOTE M5521 - LBID 208 c1

CRYOSYSTEM DOCUMENTATION PART I - GENERAL

RECEIVED
LAWRENCE
BERKELEY LABORATORY

AUG 1 0 1982

LIBRARY AND DOCUMENTS SECTION

For Reference

Not to be taken from this room

DISCLAIMER

This document was prepared as an account of work sponsored by the United States Government. While this document is believed to contain correct information, neither the United States Government nor any agency thereof, nor the Regents of the University of California, nor any of their employees, makes any warranty, express or implied, or assumes any legal responsibility for the accuracy, completeness, or usefulness of any information, apparatus, product, or process disclosed, or represents that its use would not infringe privately owned rights. Reference herein to any specific commercial product, process, or service by its trade name, trademark, manufacturer, or otherwise, does not necessarily constitute or imply its endorsement, recommendation, or favoring by the United States Government or any agency thereof, or the Regents of the University of California. The views and opinions of authors expressed herein do not necessarily state or reflect those of the United States Government or any agency thereof or the Regents of the University of California.

LAWRENCE LIVERMORE LABORATORY - UNIVERSITY OF CALIFORNIA
ENGINEERING NOTE

TF2500 | FILE NO. M5521 | PAGE 1

SUBJECT: NEUTRAL BEAM SYSTEM TEST FACILITY - TFTR
INJECTOR CRYOPANELS
CRYOSYSTEM DOCUMENTATION PART I - GENERAL

NAME: L. E. Valby
DATE: 4/30/79

1.0 INTRODUCTION

The NBSTF Cryosystem Documentation includes the following material:

Part I:	General Information
Part II:	Operating Manual
Part III:	Engineering Calculations
Part IV:	Purchase Orders (and related procurement information)

Drawings (as listed on NTFD #3084)

This is part I of that documentation; it contains a comprehensive index to the other parts as well as certain general information relating to procurement, assembly, design reviews, etc.

COMPREHENSIVE INDEX

PART I: GENERAL

1.0 INTRODUCTION

2.0 COMPREHENSIVE INDEX

3.0 GENERAL DESCRIPTION

4.0 JOB ORDER LISTS

5.0 PROCUREMENT BACKUP

- 5.1 Supplemental Specifications
- 5.2 Certifications

6.0 ASSEMBLY AND TEST PROCEDURES

7.0 DESIGN REVIEWS

- 7.1 Preliminary
- 7.2 Final

8.0 TRANSMITTALS

- 8.1 Drawings
- 8.2 Documentation

PART II: OPERATING MANUAL

1.0 INTRODUCTION

2.0 COOLDOWN

2.1 Pre-Cooldown Conditions
2.2 Purge Cryogenic Systems

2.2.1 LN_2 System
2.2.2 LHe System

2.3 LN_2 Cooldown

2.3.1 Setup
2.3.2 Cooldown
2.3.3 Evaluation Criteria
2.3.4 Shroud and Guard Lines
2.3.5 Transition to Steady State Operation

2.4 LN_2 Operation

2.4.1 Normal Operation
2.4.2 Abnormal Indications

2.5 Helium Cooldown

2.5.1 Setup
2.5.2 Cooldown
2.5.3 Evaluation Criteria
2.5.4 Transition to Steady State Operation

2.6 LHe Operation

2.6.1 Normal Operation
2.6.2 Abnormal Indications

3.0 STEADY STATE

3.1 LN_2 System

3.1.1 Normal Operation
3.1.2 Abnormal Indications

3.2 LHe System

3.2.1 Normal Operation
3.2.2 Abnormal Indications

4.0 SYSTEM QUALIFICATION

4.1 Mechanical Integrity

4.1.1 Leaks
4.1.2 Main Supports
4.1.3 Distortion and Damage
4.1.4 Operation

4.2 Cryogenic Performance

4.2.1 Temperatures
4.2.2 Circulation
4.2.3 Consumption

4.3 Pumping Performance

4.3.1 Procedure
4.3.2 Line Density
4.3.3 Injected Gas
4.3.4 Escape Clause

5.0 REGENERATION

5.1 Motivation
5.2 Description
5.3 Panel Warm Up

5.3.1 LN_2 System
5.3.2 LHe System

5.4 Pump Out
5.5 LN_2 System Recooling

5.5.1 Helium Dewar Pressurization
5.5.2 Recool LN_2 System
5.5.3 Steady State

5.6 LHe System Recooling

5.6.1 Cooldown
5.6.2 Steady State

5.7 Completion of Regeneration Cycle
5.8 Abnormal Indications

5.8.1 LN_2 System
5.8.2 LHe System

6.0 WARM UP

6.1 Establish Warm Up Mode

6.1.1 From Cooldown Mode
6.1.2 From Steady State Mode
6.1.3 From Regeneration Mode
6.1.4 Remaining Steps

6.2 Warm Up He System

6.2.1 Remove Liquid He from System
6.2.2 He System Warm Up

6.3 Warm Up LN_2 System

6.4 Secure Cryosystem

7.0 UTILITY FAILURE

7.1 Power

7.1.1 LN_2 System
7.1.2 LHe System

7.2 Instrument Air
7.3 LN_2 Supply
7.4 LHe Refrigerator
7.5 Computer

8.0 VACUUM BREAK

8.1 TYPES OF BREAKS

8.1.1 Massive
8.1.2 Partial
8.1.3 Water

8.2 TYPICAL EVENTS

8.2.1 LN_2 System
8.2.2 LHe System

8.3 REQUIRED ACTION

8.3.1 Massive Breaks
8.3.2 Partial Breaks

9.0 ASSOCIATED DOCUMENTS

9.1 P & I Diagram

9.2 Instrumentation Readout Status

9.3 Control Panels

9.4 Schematics

9.5 Commercial Manuals & Data Sheets

9.6 Carbon Glass Resistor Calibrations

9.7 Signal Description Forms

PART III: ENGINEERING CALCULATIONS

1.0 INTRODUCTION

1.1 Organization and Index
1.2 Bibliography

2.0 CRYOPUMPS

2.1 Stress Analysis

2.1.1 Requirements
2.1.2 Description
2.1.3 Vertical and Front-Back Loadings
2.1.4 Left-Right Loadings
2.1.5 Loads Within Array
2.1.6 Module Top Plate Stresses
2.1.7 Other Stresses on Module
2.1.8 Quilted Panels
2.1.9 Miscellaneous

2.2 Steady State Thermal

2.2.1 Heat Loads and Inventory
2.2.2 Convective Circulation
2.2.3 Temperature Gradients

2.3 Transient Thermal Analysis

2.3.1 Cooldown
2.3.2 Regeneration

2.4 Vacuum Break

2.4.1 Air Flow Rate
2.4.2 Energy Released
2.4.3 Helium Panel
2.4.4 Helium Dewar

2.5 Pumping

2.5.1 Gas Loads
2.5.2 Conductances
2.5.3 Pump Speeds
2.5.4 Pressures
2.5.5 Line Density
2.5.6 Streaming
2.5.7 Active Pumping Area

2.6 Experiments

2.6.1 Initial Module Testing
2.6.2 Up-to-Air Test
2.6.3 Support Rod Test

3.0 HELIUM DEWAR

3.1 Stress Analysis

3.1.1 Pressure Vessel
3.1.2 Supports
3.1.3 Weight and Stand

3.2 Thermal Analysis

3.2.1 Heat Loads
3.2.2 Thermo-Acoustic Oscillations
3.2.3 Diverter Valve Seal

4.0 LN_2 MANIFOLD

4.1 Basic Sizing
4.2 Heat Load
4.3 Internal Pressure

PART IV: PURCHASE ORDERS

CRYOPUMPING SYSTEM FOR TFTR NEUTRAL BEAM INJECTORS*

Lawrence E. Valby

Lawrence Livermore Laboratory, University of California
Livermore, California 94550

Summary

The cryocondensation pumping system for the TFTR neutral beam injectors is described. Topics include hardware design, differential pumping and beam loss, operational modes, and response to massive vacuum breaks.

Introduction

In January 1977 Lawrence Livermore Laboratory (LLL) and Lawrence Berkeley Laboratory (LBL) agreed with Princeton Plasma Physics Laboratory (PPPL) to design and test a prototype neutral beam injector, at least four of which will be installed on the Tokamak Fusion Test Reactor (TFTR). Descriptions of the general requirements and the total beamline design may be found elsewhere in these proceedings.[1]

The major features of the cryogenic system are:

- Active pumping area 29.5 m^2, gross area 34.2 m^2.
- Pumping Speed for D_2 at 4.5 K: 2.5 $\times 10^3\ m^3 \cdot s^{-1}$.
- Net 120 keV D° loss owing to background pressure of ~1.64% ($\int Pd\ell$ 3 $\times 10^{-5}$ torr · m).
- Cryocondensation pumps, 8 modules (5450 kg).
- 0.75 m^3 liquid helium dewar (900 kg).
- LN_2 distribution manifold (450 kg).
- Operation at 3.8 K or 4.5 K.
- Helium heat load: 45 W.
- LN_2 heat load: 4700 W.

Hardware Design

We have maintained a close cooperation with PPPL personnel throughout the design of the prototype beamline. Space limitations on the TFTR facility dictated the requirement for a rectangular vacuum vessel. Preliminary estimates of required pumping area then established the approximate length and height required. It was essential that cryopumping only be performed on the vertical surfaces to prevent potential flow instabilities and cryopump dryout associated with horizontal panels.

Other important considerations in the preliminary design were the requirement for making repairs with remote handling equipment (because of the expected TFTR radiation environment), ease and repetitiveness of fabrication for the large number of units involved, and compatibility with the PPPL cryogen supply systems.

We have achieved these goals in the final design. The cryosystem consists of an array (Fig. 1) of 8 modular cryopumps (Fig. 2), as well as a liquid helium storage dewar, and a liquid nitrogen distribution manifold. (Fig. 3)

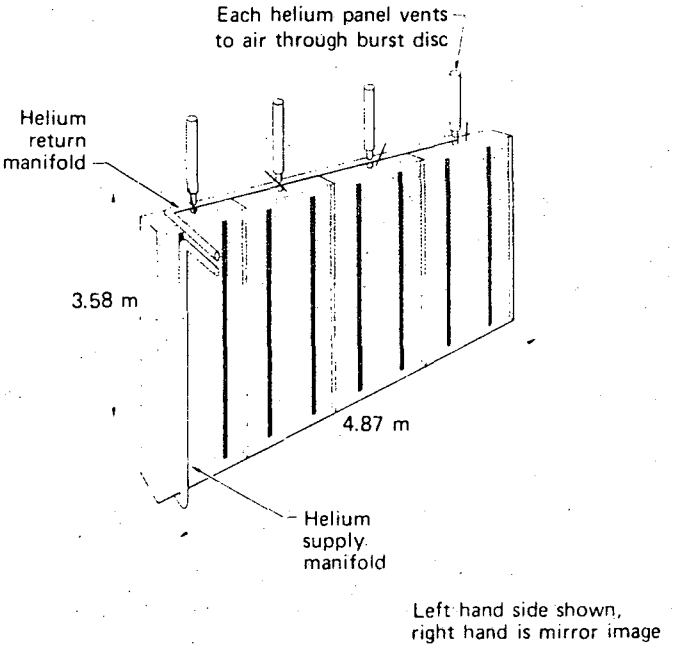

Fig. 1. Cryopump array.

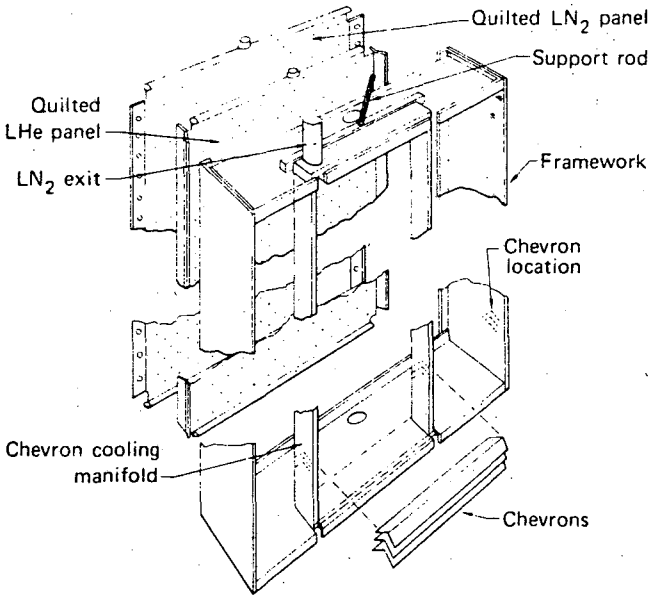

Fig. 2. Cryopump module.

*This work was performed under the auspices of the U.S. Energy Research and Development Administration, under contract No. W-7405-Eng-48.

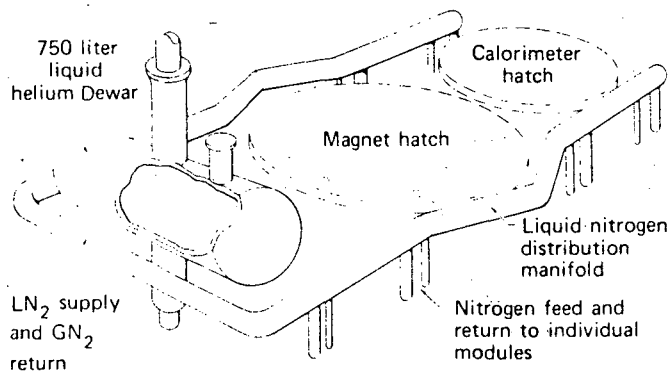

Fig. 3. Cryogen storage system.

Cryopump Array and Modules

A cryopump array consists of four nearly identical modular units bolted together, one such array on each side of the vacuum chamber. They are suspended from the roof and are also fastened to each other to prevent lateral motion. There is approximately 7.5cm clearance to the inside wall of the vacuum vessel all around.

Four tension and compression rods of Ti-6Al-4V alloy suspend each cryopump array. They are carefully arranged to self-compensate for the large cooldown contraction (approximately 1.3 cm) of the length of the array and also to prevent the array from end-to-end swinging. The rods together with the trusses at each end of the array eliminate excessive motion of the cryopumps, thereby preventing damage to plumbing fittings, etc., during handling operations. The array is controlled in position at all times, and will accept loadings of approximately 1.4 g in all directions, more than the requirement for earthquake loading at LBL (0.7 g).

The individual modules consist of a welded stainless steel framework, with conduction-cooled blackened copper chevrons (120°-included-angle) facing the interior of the vacuum vessel. At least one end of each chevron is brazed to a cooling manifold of rectangular stainless steel tubing. A quilted stainless steel panel behind the chevrons (formed by spot-welding two sheets together in a regular pattern and hydrostatically inflating its interior) serves as the cryocondensing surface. Liquid helium at 4.5 K (3.8 K for H_2 operation) wets the interior of this panel. This technique allows high cross-flow capability, and has been used successfully on many recent projects at LLL/LBL. A similar panel flooded with liquid nitrogen forms the back of the module.

All modules are identical except that left and right hand units are used for the nitrogen plumbing of the chevron cooling manifold. This difference only appears in the final orientation and assembly of the cooling manifold into the framework, and in minor plumbing fittings. The rectangular stainless steel tubing will operate at approximately 7×10^5 Pa (100 psi) before reaching yield. The quilted panels are formed at approximately 2.7×10^6 Pa (400 psi).

All vacuum joints within the vacuum vessel are welded. We did consider using demountable cryogenic fittings, but the present choice seems the most reliable. There is space in the design for automatic tube-welding equipment should repair be necessary.

Liquid Helium Dewar and Manifolding

Liquid helium is supplied to the cryopump array from an overhead 750-liter-capacity Dewar. This size was chosen to provide approximately eight hours of operation, allowing for required refrigerator maintenance without shutdown or inadvertant defrost. The dewar has its own vacuum jacket and a liquid-nitrogen-cooled interior shell.

An annular concentric dual bayonet conducts feed and return to the cryopumps. The design provides excellent thermal isolation of the feed line to the panels to prevent upsetting the natural convection loop. The return two-phase fluid intercepts the heat load to the bayonet. The Dewar is easily installed onto the top of the beamline (alignment is not critical) and the male bayonet nose is simple to replace. A check valve could be incorporated in this nose to prevent surging during cooldown, if desired.

A valve assembly in the Dewar modulates the helium flow to the panels and allows the flow to be forced, e.g. during cooldown. The entire valve stem assembly may be pulled out and the seats within the dewar refaced if required.

Parallel feed to and from the liquid helium panels within the beamline is used. These lines are nitrogen shrouded and are mounted to the arrays.

Liquid Nitrogen Distribution Manifold

This large manifold (approximately 12 m of 20-cm-diameter pipe) is essentially an elongated, low profile Dewar. Individual feed and return to each module allows maximum space utilization in the vacuum vessel itself, and keeps the cryogenic vacuum joints in the vessel to a minimum. It performs the necessary phase separation function. Solenoid valves in the manifold provide forced flow for cooldown; they are easily replaced if necessary.

A subsidiary set of flow-control valves (not shown) controls the feed rate of liquid nitrogen to the manifold, the helium dewar, and the interior helium plumbing guards.

Differential Pumping[2]

The vacuum chamber interior is divided by baffles into three differentially pumped chambers. This is necessary to provide a sufficiently low line density integral from the ion bending magnet to the torus. A schematic diagram of the pumping system is shown in Fig. 4. The gas balance equations to be satisfied are

$$P_1(S_1 + C_{12}) - P_2C_{12} = Q_1 \quad (1)$$

$$-P_1C_{12} + P_2(S_2 + C_{12} + C_{23}) - P_3C_{23} = Q_2 \quad (2)$$

$$-P_2C_{23} + P_3(S_3 + C_{23} + C_{30}) = Q_3 = 0 \quad (3)$$

We used the following assumptions to calculate the gas loads:

(1) There is 7.8 MW input to each of three sources, with the output species divided as shown in Fig. 5 (scaled to 1 MW into torus). Thus 2.44 MW of full energy D° and 1.41 MW of lower energy neutrals are generated.

(2) Only 1.66 MW of full energy D° and 0.77 MW of lower energy neutrals are assumed to enter the

torus; the remaining neutrals are scraped off equally in chambers (1) and (2).

(3) All positive ions (3.88 MW) are deposited on the ion dump in chamber (2) and appear there as a molecular gas load.

(4) All negative ions (0.05 MW) are reflected or scraped off on the magnet and appear in chamber (1).

(5) Each source has a cold gas flow of 30 torr·ℓ·s^{-1} that is assumed to be entirely randomized as a load in chamber (1).

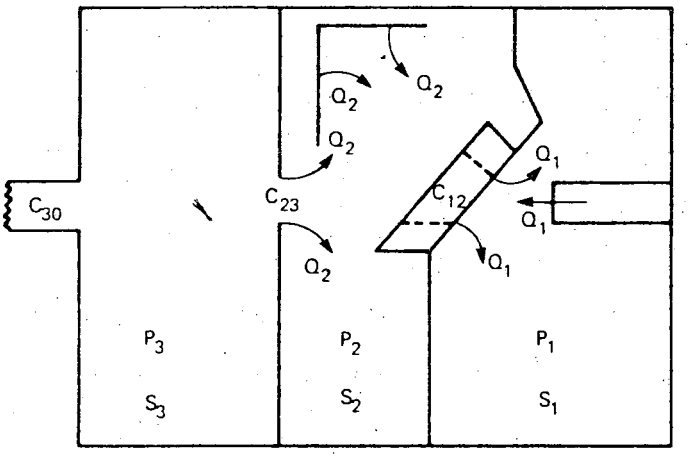

Fig. 4. Pumping system schematic diagram.

Thus gas load Q_1 consists of excess source gas (90 torr·ℓ·s^{-1}), negative ions (0.2 torr·ℓ·s^{-1}), and excess neutrals (2.2 torr·ℓ·s^{-1}) for a total of 92.4 torr·ℓ·s^{-1}. Gas load Q_2 includes excess neutrals (2.2 torr·ℓ·s^{-1}), D^+ (full, half and third energy) (10.6 torr·ℓ·s^{-1}), and D_2^+ (0.3 torr·ℓ·s^{-1}) a total of 13.1 torr·ℓ·s^{-1}.

The calculated conductances are

$$C_{12} = 8.8 \times 10^4 \ell \cdot s^{-1}$$

$$C_{23} = 1.24 \times 10^5 \ell \cdot s^{-1}$$

$$C_{30} = 3.58 \times 10^4 \ell \cdot s^{-1} .$$

A specific pumping speed of 8.3ℓ·s^{-1}·cm^{-2} is used to calculate the speeds available. (This can be compared with experimental data of approximately 9ℓ·s^{-1}·cm^{-2}). Thus

$$S_1 = 9.53 \times 10^5 \ell \cdot s^{-1}$$

$$S_2 = 7.72 \times 10^5 \ell \cdot s^{-1}$$

$$S_3 = 7.34 \times 10^5 \ell \cdot s^{-1} .$$

The simultaneous solution of Eqs. (1) to (3) using these values is

$$P_1 = 9.06 \times 10^{-5} \text{ torr}$$

$$P_2 = 2.18 \times 10^{-5} \text{ torr}$$

$$P_3 = 3.02 \times 10^{-6} \text{ torr} .$$

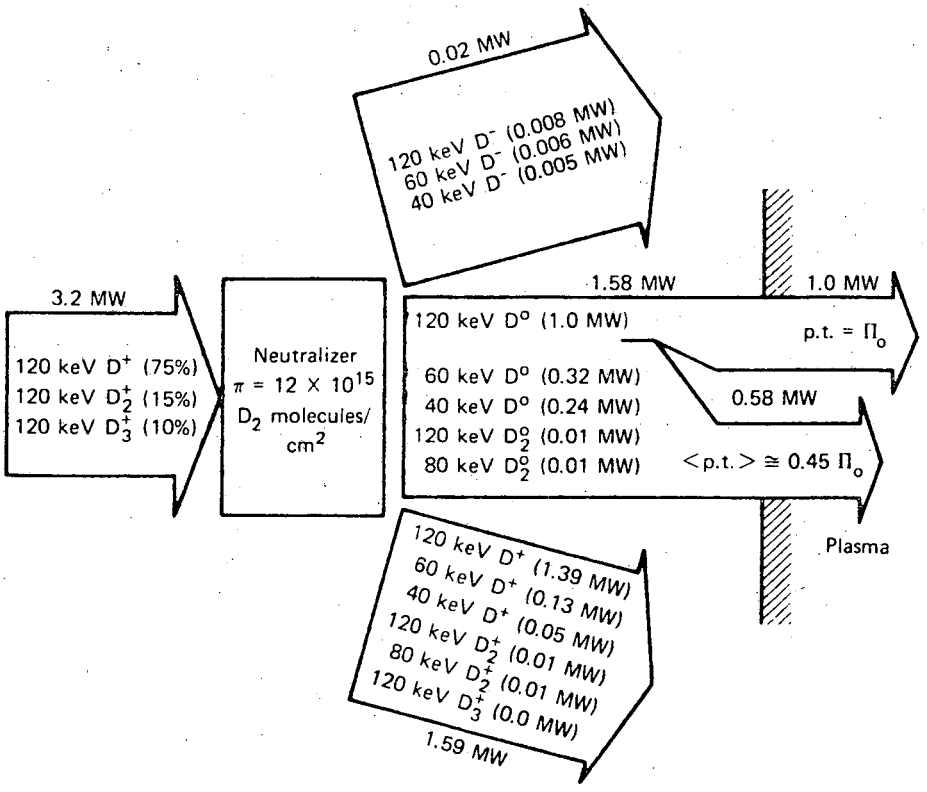

Fig. 5. Species distribution from source.

If we assume the pressure at the plasma is zero and insert the proper path lengths, the line density integral from the magnet to the torus is 3×10^{-5} torr · m. For 298 K background gas temperature, this corresponds to 9.72×10^{13} molecules · cm^{-2}. The cross section for ionization at 120 keV is approximately 1.7×10^{16} cm^2, and consequently the beam loss is about 1.64%. The cold gas flow into the torus is

$$Q = P_3 C_{30} = 0.108 \text{ torr} \cdot \ell \cdot s^{-1} \quad .$$

Both these results are well within the PPPL requirements.

Operation

Cooldown

The mass to be cooled to LN_2 temperature is about 5900 kg including 1070 kg to be cooled to helium temperature; the entire process takes 24 hours. A minimum of 3500 liters of LN_2 and 210 liters of helium is required. The vacuum space is spoiled to about 0.03 torr with D_2 gas to speed the cooling of the helium panels to LN_2 temperature.

The maximum cooldown rate is determined by an approximately 2.5-hour thermal diffusivity time constant within the modules. Several thermocouples will be installed on the system, along with strain gauges in critical locations, to ensure acceptable rates.

Steady State

The helium heat load projected for the system is about 45 W; of this, roughly 30 W is 82 K blackbody radiation onto the panels. Our confidence in this projection is low because the emissivity that can be achieved in practice is uncertain (more so considering the potential for contaminants such as pump oil, water etc. that may accumulate over long operating periods). Here we use an emissivity of 0.2 for stainless steel; it could be degraded to 0.4.

Nuclear heat loads at TFTR have been calculated and are found to be low, about 2.2 W including duty-cycle averaging. The peak nuclear heat loads during individual shots result in temperature excursions on panel pumping surfaces of a few millidegrees.

Both the liquid helium and liquid nitrogen circuits in the beamline provide substantial excess flows, more than the minimum required to prevent dryout, by establishing convective circulation loops.

The driving mechanism for these loops is the density difference between the fluids in the nearly adiabatic feed lines (downcomers) and in the panels. The expected mass flow rates are calculated using the following correlation[3] for void fraction within the panels:

$$\alpha = \frac{V_{sG}}{1.45(V_{sL} + V_{sG}) + V_{bs}}$$

in which V_{sG} and V_{sL} are the superficial gas and liquid flow velocities (based on the entire flow area available), and V_{bs} is the bubble rise velocity in a stagnant fluid, which is used as a parameter (up to 10.7 cm/s for liquid helium). The quantity V_{sL} depends on the mass flow rate, which though unknown is constant. The average density in the panel can be written as

$$\bar{\rho} = \rho_L - \frac{(\rho_L - \rho_G)}{\ell} \int_0^{\ell} \alpha(x)dx$$

where ℓ is the panel height.

If we assume that V_{bs} is position-independent, the integration can be performed. This gives the driving hydrostatic head term.

Friction drops are calculated using classical two-phase-flow correlations[4,5] expressed in terms of mass flow rate. The driving terms and the friction losses are equated and solved for the mass flow rate, which depends on V_{bs}.

Considerable iteration is required to ensure that the equations are consistent with the resulting flow regimes; in fact, the plumbing is resized as necessary to avoid high-pressure drop flow regimes. This is particularly important in the liquid helium circuit, which has parallel feed to the panels. The furthest downstream panel, in the third differentially pumped chamber, sees a lower mass flow rate than the others, primarily because the flow impedance of the panels is comparable to that of the manifolds.

The analytical results indicate that helium flow within this panel exceeds the required minimum by roughly a factor of 15, and that flow variations between adjacent panels should not exceed 10%. Similar excess flows are expected within the liquid nitrogen circuits.

Regeneration

To prevent the formation of an explosive mixture, the source gas input is integrated, thus limiting the accumulation of D_2 on the helium panels to a total of 13 torr·liter per liter of vacuum-vessel volume. When TFTR is operating with tritium, it must be regenerated weekly to keep within the allowable limits of T_2 outside the vault.

Helium flow to the panels is shut off and boiloff gas from them returned directly to the refrigerator. When the panels warm above about 7.5 K, all deposited gas is driven off and pumped away. This takes about 20 min and the helium circuit is then recooled.

Vacuum Loss

In the event of a massive vacuum break, air condensation onto the liquid helium panels causes a very rapid pressure rise. The panels must have an adequate relief capacity so they are not destroyed by the rise in pressure. Furthermore, because four beamlines are installed on the torus, and because there is no effective means for isolating them, a vacuum break into one affects all the beamlines. Therefore, we designed the relief system so that the primary relief discs can be replaced without disassembly of the cryosystem.

The PPPL established the following minimum requirement for the primary relief system: In the event of a 10.6-cm-diameter (or equivalent) vacuum break into any part of the beamline, the system must maintain an internal peak pressure in the helium panels of less than half their forming pressure. The pressure at which the relief discs open must be set to allow adequate margin for "normal" transient pressure fluctuations (as in cooldown). Secondary relief discs that vent into the vacuum vessel relieve even larger overpressures.

As air condenses from room temperature gas to 4 K solid, it liberates approximately 560 J/g. Critical air flow through the specified orifice corresponds to a mass flow rate of 1.15 kg/s. The worst case is a break into the third differentially pumped chamber (located nearest the torus) which has the smallest pumping area. The equivalent unit heat load is approximately 7 W/cm^2 (compared to data showing unit heat loads between 1.25 and 6.25 W/cm^2 for air condensation onto uninsulated surfaces[6]). The heat load onto the helium panel in each module in the third chamber is calculated to be approximately 262 kW.

Each panel contains approximately 16 liters of liquid helium. If the initial temperature is 3.8 K (the most severe condition because of the higher density), 2.1 kg of helium will ultimately be vented. A pressure-internal energy diagram shows it takes approximately 0.1 s to the panel forming pressure (27 atm) without any venting.

We have performed a time-stepped calculation of the pressure history in the panel. The calculation assumes critical isentropic flow across a 3.48-cm-diameter pipe (the exit diameter of the panel plumbing). We used the NBS program HEPROPS[7,8] for helium properties. The panel is initially pressurized at constant density until the relief pressure (set at 5 atm) is attained, approximately 20 ms after the start of the process. The fluid state is defined by the density corresponding to 3.8 K saturation and this pressure.

We calculate the mass flow rate for critical flow within the 3.48-cm diameter using the classical isentropic expansion formula[9]

$$\dot{M} = A\left\{2P_o\rho_o \frac{\gamma}{\gamma-1}(1.01325\times 10^6)\left[r^{2/\gamma} - r^{(\gamma+1)/\gamma}\right]\right\}^{1/2}$$

with

$$r = \left(\frac{2}{\gamma+1}\right)^{\frac{\gamma}{(\gamma-1)}}$$

and

$$\gamma = C_p/C_v = \text{ratio of specific heats}$$

where $\dot{M}$ is in g/s, P_o in atm, ρ_o in g/cm^3 and A in cm^2.

Because the flow is not through an orifice, no orifice coefficient is included. The specific heat ratio is evaluated at the state previously established; this is equivalent to assuming that the fluid is at stagnation conditions.

The fluid is allowed to vent at this mass flow rate for a time period Δt (typically taken as 20 ms). This establishes a new density within the panel.

The heat flux is then applied to the panel for the same period of time. The new fluid internal energy is calculated from the first law of thermodynamics as follows:

$$\Delta U = \Delta Q - \Delta W = M_2U_2 - M_1U_1$$

$$= \dot{Q}\Delta t - \dot{M}\Delta t U_1 - \Delta W$$

but

$$\Delta W = P_1 A V \Delta t = P_1 \frac{\dot{M}}{\rho_1}\Delta t$$

in which subscript 1 refers to the initial state and subscript 2 refers to the final state. V is the velocity and the other symbols have their usual meaning.

Thus $$M_2U_2 - M_1U_1 = \Delta t[\dot{Q} - \dot{M}(U_1 + P_1/\rho_1)] \quad .$$

Because

$$M_2 = M_1 - \dot{M}\Delta t \quad .$$

and

$$h_1 = U_1 + P_1/\rho_1 \quad ,$$

we have

$$U_2 = \frac{M_1U_1 + \Delta t\,[\dot{Q} - \dot{M}h_1]}{M_1 - \dot{M}\Delta t} \quad .$$

The new fluid state is defined by this internal energy and the previously calculated density. The calculation is repeated, updating the fluid properties at each time step, until the peak pressure has been passed.

The results of this calculation are shown in Fig. 6. Note that the peak mass flow rate is reached before the peak pressure. It should also be noted that shorter time steps reduce the calculated peak pressure.

Downstream of the critical flow region, an approximately 4.75-cm-diameter conduit leads to the rupture disc itself. The flow in this conduit is at less than Mach 0.3; if we treat the flow as incompressible in this region, there is an additional friction pressure drop of less than 0.1 atm. The relief disc itself has an area equivalent to this conduit, including the effect of orifice coefficient.

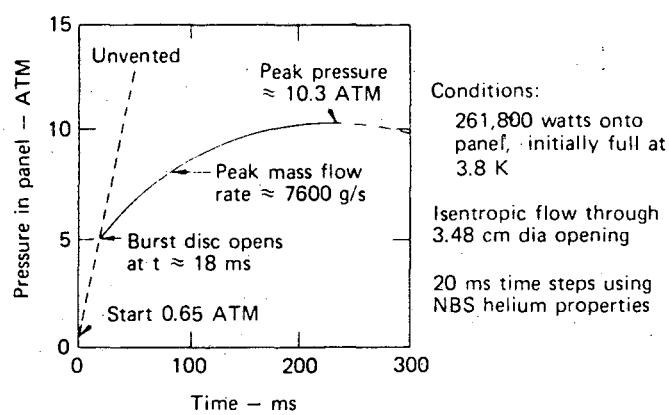

Fig. 6. Pressure history in helium panel.

References

1. L. C. Pittenger, "A Neutral Beam Injection System for the Tokamak Fusion Test Reactor," in Proc. Seventh Symposium on Engineering Problems of Fusion Research, Knoxville, 1977.

2. Substantially all of the calculations in this section were performed by L. C. Pittenger.

3. G. W. Govier, and K. Aziz, The Flow of Complex Mixtures in Pipes (Van Nostrand Reinhold, New York, 1972) p. 383, and chapters 8 and 10.

4. W. Frost, ed., Heat Transfer at Low Temperatures (Plenum Press, New York, 1975) p. 238 and chapter 11.

5. M. W. Rohsenow and J. P. Hartnett, ed., Handbook of Heat Transfer (McGraw-Hill, New York, 1973) chapters 7 and 14.

6. R. H. Kropschot, eds., Technology of Liquid Helium (National Bureau of Standards, Washington, D.C., 1968) p. 270.

7. R. D. McCarty, National Bureau of Standards, Boulder, Colorado.

8. Reference to a company or product name does not imply approval or recommendation of the product by the University of California or the U.S. Energy Research and Development Administration to the exclusion of others that may be suitable.

9. J. F. Lee and F. W. Sears, Thermodynamics (Addison-Wesley, Reading, Mass, 1955) p. 244.

NOTICE

"This report was prepared as an account of work sponsored by the United States Government. Neither the United States nor the United States Energy Research & Development Administration, nor any of their employees, nor any of their contractors, subcontractors, or their employees, makes any warranty, express or implied, or assumes any legal liability or responsibility for the accuracy, completeness or usefulness of any information, apparatus, product or process disclosed, or represents that its use would not infringe privately-owned rights."

MLD/lrr/ts/lc

Hardware design features

- System includes cryopump array and cryogen supply system
- Cryopump array includes 8 modular cryopumps, 4 on each side of vacuum chamber
- Each module is ≈ 3.6 m high × 1.2 m wide and weighs 680 Kg
- Cryopump array is suspended under lid of vacuum chamber; supports compensate for differential contraction
- Cryogen supply system is mounted on top of vacuum chamber lid; includes liquid helium dewar and liquid nitrogen distribution manifold
- Total system weight ≈ 6800 Kg (15,000 lb)

Color code

- Liquid helium
- Two phase helium
- Liquid nitrogen
- Two phase nitrogen
- Gas return

Cryopump Module

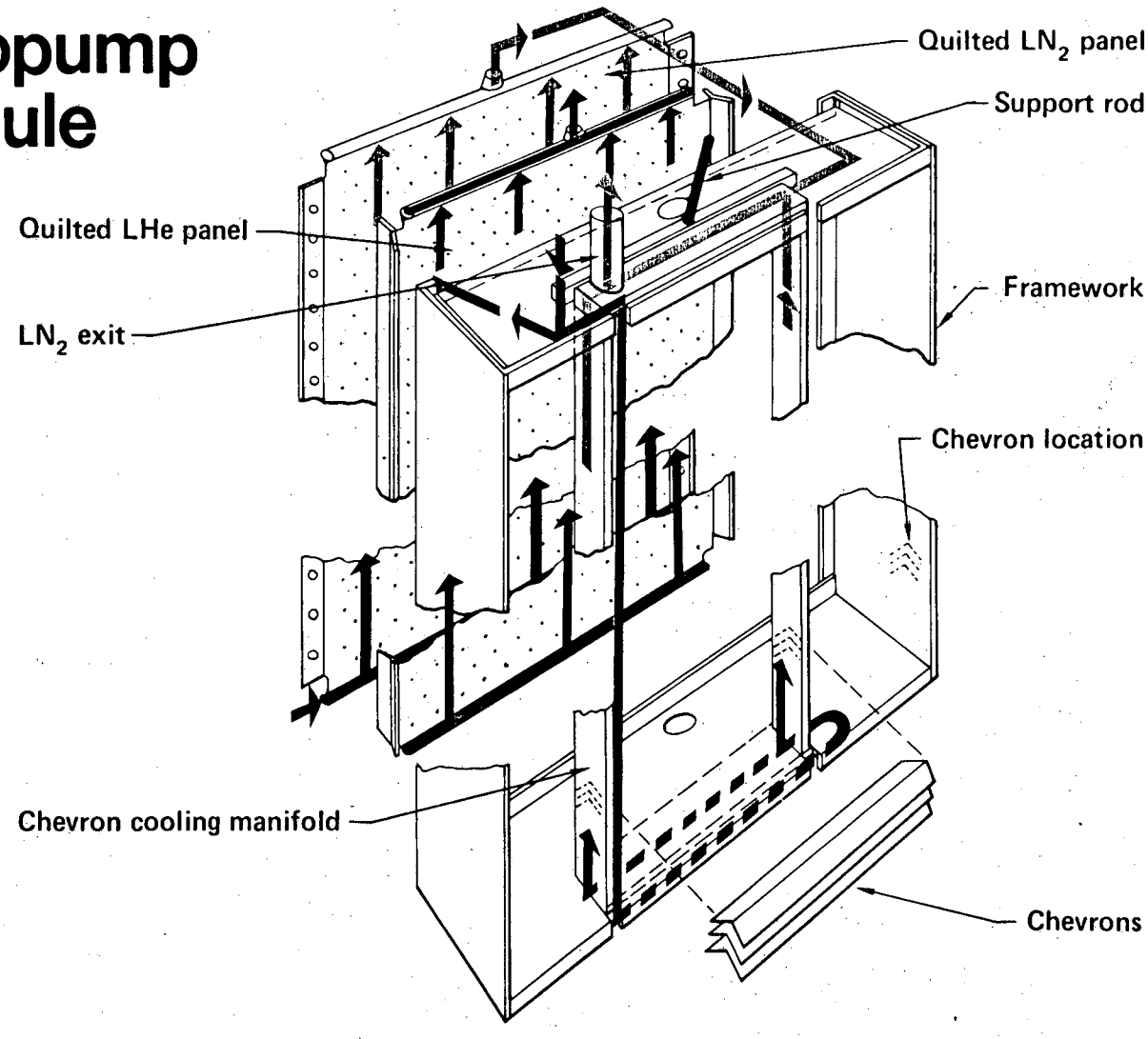

Cryopump array

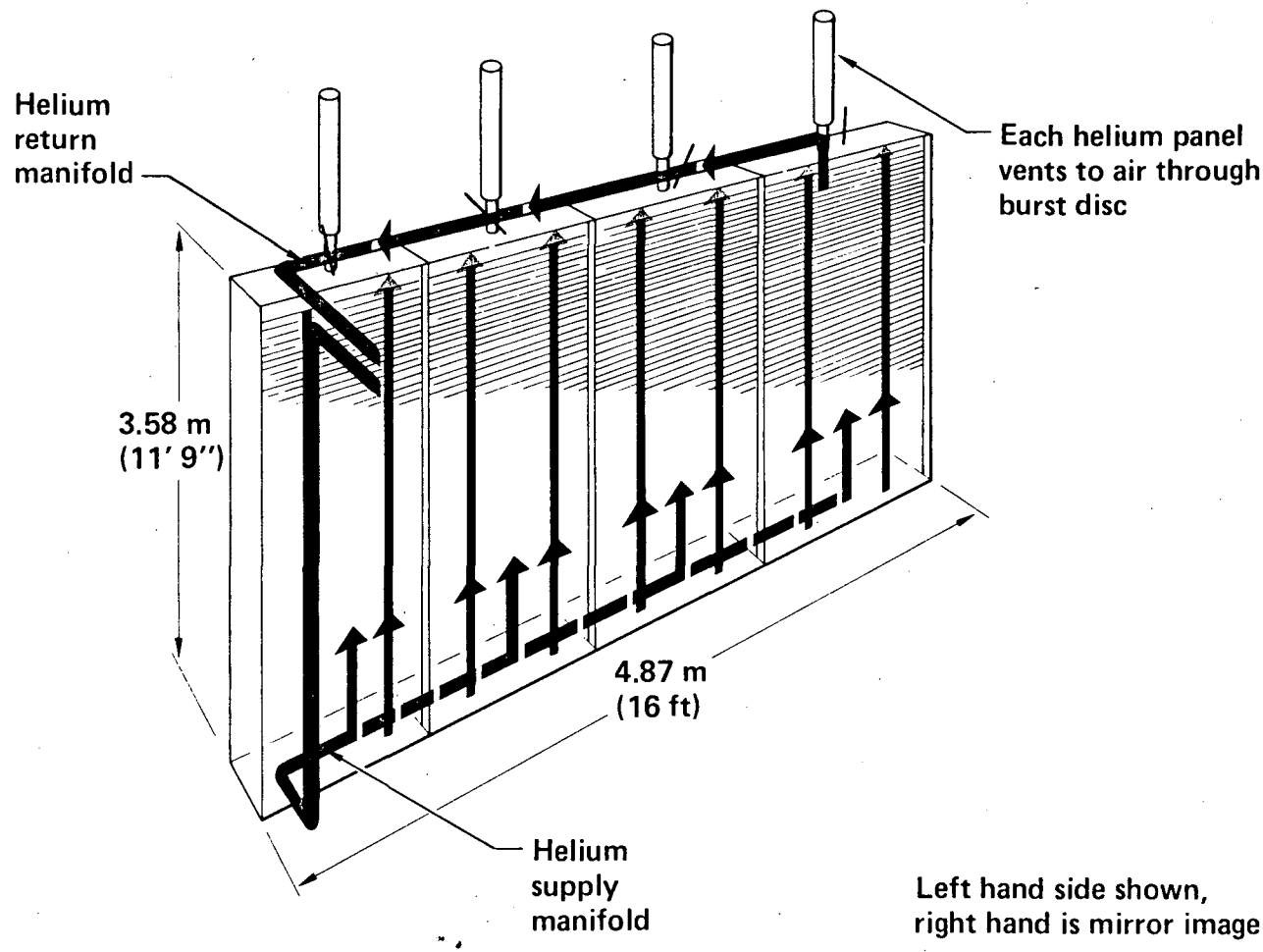

LBID 208
M5521 Page 19

Cryogen storage system

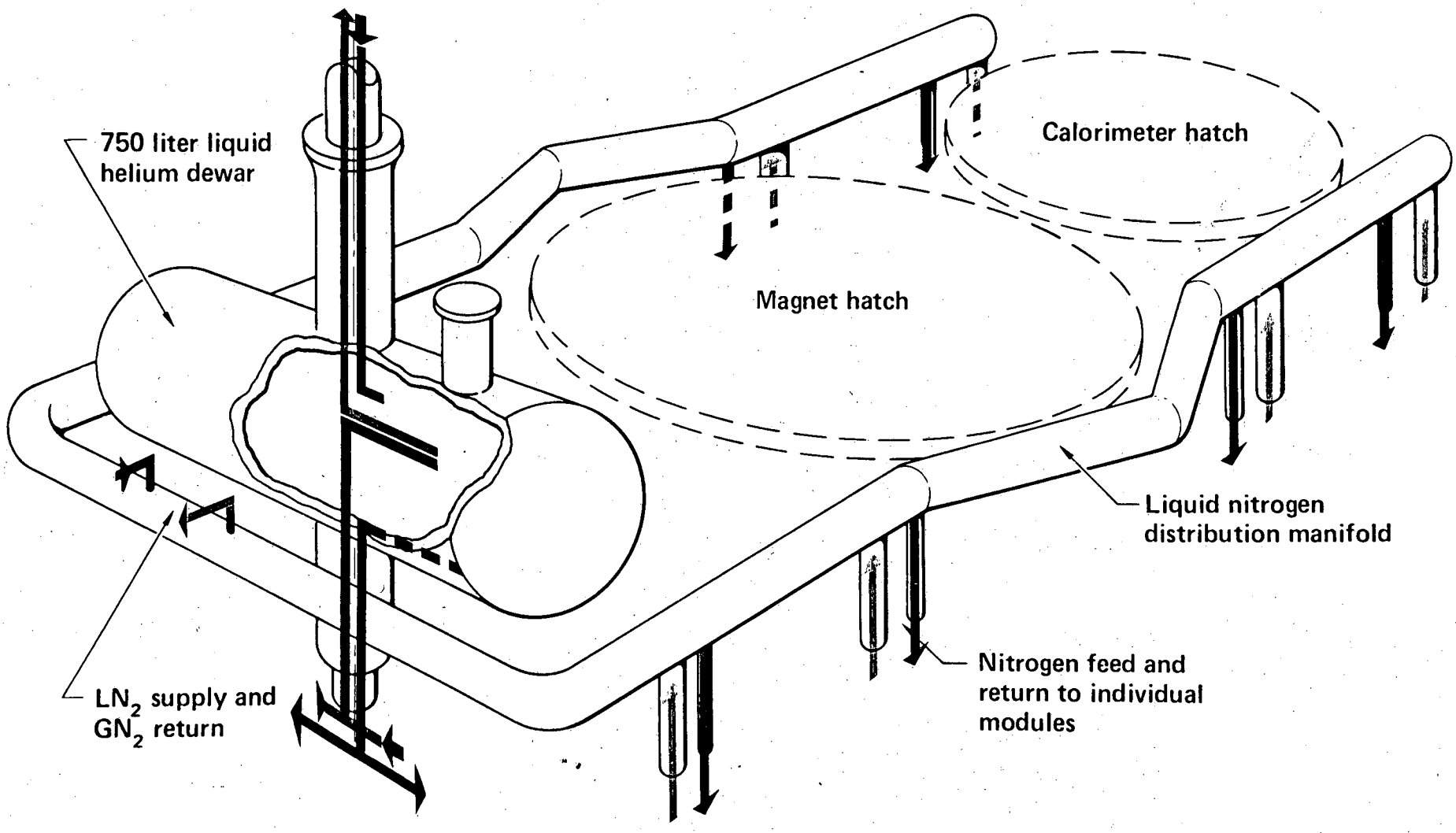

Interdepartmental letterhead

Mail Station L- 541

Ext. 29905

NTFC #3140
March 29, 1979

M E M O R A N D U M

TO: Distribution

FROM: Denise Abruscati

SUBJECT: Job Order/Change Order List NTFD #3084, Revision 3

- -

Enclosed is the third revision of the TFTR-NBSTF Job Order/Change Order List NTFD #3084 dated January 10, 1979.

As there are many changes, please replace all pages with the attached March 23, 1979 copy. All changes are indicated by an asterisk next to the appropriate J.O. or C.O. listed in the Table of Contents.

If you have any questions or comments, you may contact me at x-29905.

/da

Distribution:

LLL	LBL	PPPL
L. Pittenger	K. Lou	H. Allen
R. Stone	J. Haughian	K. Wright
L. Valby	W. Cooper	
B. Denhoy	A. Roberts	
R. Burnham	R. Nemetz	
R. Wood	R. Byrns	
C. Wendland	D. Roth	
J. Bradley	B. Baker	
J. Aranibar	D. Morris	
D. Cilley	G. Newel	
D. Abruscati (File)	P. Bean	
	K. Moore (File)	

TFTR-NBSTF

JOB ORDER/CHANGE ORDER LIST

MARCH 23, 1979

NTFD #3084

TFTR-NBSTF
JOB ORDER/CHANGE ORDER LIST
March 23, 1979

Table of Contents

J.O./C.O. #	DESCRIPTION	DATE WRITTEN	PAGE
	4749-21 GENERAL		
AAA77-113531-0B	Design Concept Layout (Dwg.)		1
J.O. #629574	Photo Diode Array Assy	10-18-78	1
*C.O. #629574-1		1-29-79	
	4749-22 VACUUM ENCLOSURE		
J.O. #620612	Vacuum Vessel	4-25-77	2
C.O. #620612-1		9-28-77	2
C.O. #620612-2		4-18-78	2
AAA77-108344-0A	Beam Layout-Plan View (2 shts) (Dwg.)		3
J.O. #625573	Alternate Cover Weldment	3-1-78	3
C.O. #625573-1		4-10-78	3
	4749-23 CRYOPUMPING SYSTEM		
J.O. #621183	Helium Dewar Bellows Tabs 1-16	6-22-77	4
J.O. #621689	Cryopanel Module Rec. Tube	7-22-77	4
J.O. #622460	Cryopanel Module-Brazement	9-1-77	4
C.O. #622460-1	(SUPERSEDED BY J.O. 624632 & 624633)	1-10-78	4
J.O. #623068	Cryopanel Module LN2 & LHe Panels	10-7-77	4
C.O. #623068-1		12-14-77	4
C.O. #623068-2		3-20-78	4
C.O. #623068-3		8-9-78	4

J.O. #623637	Cryopanel Testing Tank	11-9-77	4
J.O. #623873	LN2 Manifold Bellows Tabs 6 & 8	11-21-77	4
J.O. #624258	Cryopanel Module Bellows 2, 4, 8 & 17	12-12-77	4
J.O. #624428	LN2 Manifold Assy	12-2-77	5
J.O. #624632	Cryopanel Module-B	1-11-78	5
C.O. #624632-1		8-9-78	5
J.O. #624633	Cryopanel Module-W	1-9-78	6
C.O. #624633-1		8-8-78	7
Req. #1812-9	Test Facility Stand	1-12-78	7
J.O. #624890	LN2 Test Dewar	1-26-78	7
J.O. #625095	Cryopanel Module Bellows Tab-15	2-7-78	7
J.O. #625274	100 Inch Tank Cover Rework (RECORD ONLY)	2-15-78	8
J.O. #626178	Cryopanel Module Plumbing	4-4-78	8
C.O. #626178-1		4-20-78	9
J.O. #626179	100 Inch Tank Cover Rework	4-4-78	9
C.O. #626179-1		6-22-78	10
J.O. #626180	LN2 Manifold-Upper Coupling	4-4-78	11
J.O. #626638	Cryopanel Module Assembly Hardware	4-28-78	11
J.O. #626962	LHe Main Dewar Assy	5-11-78	11
J.O. #626980	LHe Main Dewar Assy Bellows Tab 18-21	5-15-78	14

J.O. #626981	LHe Main Dewar Assy Div. Valve/Burst Disc	5-15-78	14
J.O. #627723	BB2 Test Stand	6-21-78	15
J.O. #628099	Cryopanel Test Stand	7-19-78	15
J.O. #628564 *C.O. #628564-1	Chevron II Weld Assy	8-16-78 1-15-79	15
J.O. #628739	Helium Dewar-Upper Bayonet (LBL)	8-28-78	15
J.O. #628742	Helium Dewar-Lower Socket	8-28-78	16
J.O. #628754	Helium Dewar-Upper Bayonet	8-28-78	16
J.O. #628786 C.O. #628786-1	Lid Holder Stand Assy	8-30-78 9-11-78	16 16
J.O. #628876	Cryopanel Array	9-1-78	17
J.O. #629036	LHe Main Dewar	9-18-78	17
J.O. #629110	Stand Insert	9-21-78	17
J.O. #629370	LHe Burst Disc	10-6-78	17
J.O. #629622	Helium Dewar-Support	10-19-78	17
J.O. #629623	Cryopanel Array-Support Rod Assy	10-19-78	17
J.O. #629659	Helium Dewar-Diverter Valve	10-20-78	17
J.O. #630377	Magnet Assy/Baffles	12-4-78	18

J.O. #630602	Cryopump Assy/Shroud	12-15-78	18
J.O. #630634	He Dewar-Div. Valve/Div. Valve Drive Assy (LBL)	12-15-78	18
J.O. #630638	Cryopumping System/Baffles	12-18-78	19
J.O. #630692	Cryopump Array	12-20-78	20
J.O. #630694	Cryopump Assy/Shroud	12-20-78	20
* J.O. #630937	Cryopump Assy	1-11-79	21
* J.O. #631186	Cryopanel Module Assy/Stages 1 thru 4	1-22-79	21
* J.O. #631248	Stand & Module Assy/Cryopanel Modules	1-22-79	22
* J.O. #631896	Cryopumping System/Shield Panels	3-5-79	24
* J.O. #631898	Helium Dewar Support - 02	3-2-79	25
* J.O. #632207	LN Feed & Eshaust System LBL	3-20-79	25

4749-24 SOURCE MOUNTING, CONNECTOR, VALVE, NEUTRALIZER

J.O. #629252	SNT - Neutralizer	10-2-78	26
C.O. #629252-1		11-7-78	26

4959-24 SOURCE MOUNTING, CONNECTOR, VALVE, NEUTRALIZER

J.O. #629924	SNT Assembly - 90" Flange	11-7-78	26
J.O. #630001	SNT-Main Flg Assy/Neutralizer Assy-LCS	11-10-78	26
J.O. #630114	SNT-Main Flg Assy/Spool Weldment	11-16-78	27
C.O. #630114-1		12-4-78	27

4749-23 CRYOPUMPING SYSTEM

-Helium Dewar Bellows Tabs 1-16
J.O. #621183
AAA77-108336-00 Bellows - Tabs 01 thru 16

-Cryopanel Module Rec. Tube
J.O. #621689
AAA77-111018-00 Rectangular Tube

-Cryopanel Module-Brazement (SUPERSEDED BY J.O. 624632 & J.O. 624633)
J.O. #622460
C.O. #622460-1

-Cryopanel Module LN2 & LHe Panels
J.O. #623068
AAA77-111718-00 LN2 PANEL ASS'Y
AAA77-111717-00 LHe PANEL ASS'Y
--Consisting of--
AAA77-113511-00 Panel Support Bracket

C.O. #623068-1
AAA77-111718-0A LN2 PANEL ASS'Y
AAA77-111717-0A LHe PANEL
--Consisting of--
AAA77-113511-0A Panel Support Bracket

C.O. #623068-2
AAA77-111718-0B LN2 PANEL ASSY
AAA77-111717-0B LHe PANEL

C.O. #623068-3
AAA77-111717-0C LHe PANEL

-Cryopanel Testing Tank
J.O. #623637
AAA77-113515-00 Tank Extension
AAA77-113537-00 Mounting Bracket
AAA77-113534-00 Eye
AAA77-113535-00 Jaw
AAA77-113536-00 Body

-LN2 Manifold Bellows Tabs 6 & 8
J.O. #623873
AAA77-108336-00 Bellows Tab-06

-Cryopanel Module Bellows 2, 4, 8 & 17
J.O. #624258
AAA77-108336-0A Bellows Tabs 02, 04, 08 & 17

-LN2 Manifold Assy

J.O. #624428

AAA77-111721-00 (3 shts)	MANIFOLD ASSY
	--Consisting of--
AAA77-108336-0A	(Ref.) Bellows Tab-07
AAA77-108336-0A	(Ref.) Bellows Tab-04
AAA77-108336-0A	(Ref.) Bellows Tab-02
AAA77-108336-0A	(Ref.) Bellows Tab-06
AAA77-108336-0A	(Ref.) Bellows Tab-08
AAA77-108336-0A	(Ref.) Bellows Tab-10
AAA77-111680-00	LN2 Diversion Fitting
AAA77-111681-00	Inlet Diversion Tee
AAA77-111677-00	Inlet Female Connector Tab-01
AAA77-111677-00	Inlet Female Connector Tab-02
AAA77-111659-00	Burst Disc Inner Flange
AAA77-111678-00	UPPER LN COUPLING TAB-02
	--Consiting of--
AAA77-111679-00	Feedthru Flange Tab-02
AAA77-108336-0A	(Ref.) Bellows Tab-07
AAA77-108336-0A	(Ref.) Bellows Tab-04
AAA77-111678-00	Upper LN Coupling Tab-03
	Consisting of
AAA77-111679-00	Feedthru Flange Tab-03
AAA77-108336-0A	(Ref.) Bellows Tab-07
AAA77-108336-0A	(Ref.) Bellows Tab-04

-Cryopanel Module-B

J.O. #624632

AAA77-111014-0A Tab-01	BRAZEMENT ASSY TAB-01
	--Consisting of--
AAA77-111009-0A	(Ref.) Weldment Assy Tab-01
AAA77-111015-0A	Shim
AAA77-111016-00	Chevron Support Strip
AAA77-111017-0A	Chevron Tab-01
AAA77-111017-0A	Chevron Tab-02
AAA77-111014-0A Tab-02	BRAZEMENT ASSY TAB-02
	--Consisting of--
AAA77-111009-0A	(Ref.) Weldment Assy Tab-02
AAA77-111015-0A	Shim
AAA77-111016-00	Chevron Support Strip
AAA77-111017-0A	Chevron Tab-01
AAA77-111017-0A	Chevron Tab-02

C.O. #624632-1

AAA77-111014-0B	BRAZEMENT ASSY TAB-01
	--Consisting of--
AAA77-111009-0C	(Ref.) Weldment Assy Tab-01
AAA77-111014-0B	BRAZEMENT ASSY TAB-02
	--Consisting of--
AAA77-111009-0C	(Ref.) Weldment Assy Tab-02

-Cryopanel Module-W
J.O. #624633

AAA77-111009-0A	WELDMENT ASSY TAB-01
	--Consisting of 6 Dwgs.--
AAA77-111010-0A	1) Top Panel-Box Beam Weldment
	--Consisting of--
AAA77-111019-00	Box Beam
AAA77-111011-0A	Top & Bottom Panel Tab-01
AAA77-111011-0A	2) Top & Bottom Panel Tab-02
AAA77-111012-0A	3) Side Panel
AAA77-111013-0A	4) Chevron Cooling Manifold
	--Consisting of--
AAA77-111018-00	(Ref.) Rectangular Tube
AAA77-108336-0A	(Ref.) Bellows Tab-17
AAA77-113568-00	Tooling Bar
AAA77-111041-00	5) Panel Outlet Transition Tab-01
AAA77-111037-0A	6) Chevron Crossfeed Tab-01
AAA77-111009-0A	WELDMENT ASSY TAB-02
	--Consisting of 6 Dwgs.--
AAA77-111010-0A	1) Top Panel-Box Beam Weldment
	--Consisting of--
AAA77-111019-00	Box Beam
AAA77-111011-0A	Top & Bottom Panel Tab-01
AAA77-111011-0A	2) Top & Bottom Panel Tab-02
AAA77-111012-0A	3) Side Panel
AAA77-111013-0A	4) Chevron Cooling Manifold
	--Consisting of--
AAA77-111018-00	(Ref.) Rectangular Tube
AAA77-108336-0A	(Ref.) Bellows Tab-17
AAA77-113568-00	Tooling Bar
AAA77-111041-00	5) Panel Outlet Transition Tab-02
AAA77-111037-0A	6) Chevron Crossfeed Tab-02
AAA77-111714-0A	Coupling Strap
AAA77-111715-0A	Cover Plate
AAA77-113558-00	Half Coupling Strap
AAA78-100500-00	Rear Cover Plate

C.O. #624633-1

AAA77-111009-0C	WELDMENT ASSY TAB-01
	--Consisting of 6 Dwgs.--
AAA77-111010-0B	1) Top Panel-Box Beam Weldment
	--Consisting of--
AAA77-111019-0A	Box Beam
AAA77-111011-0B Tab-01	Top & Bottom Panel
AAA77-111011-0B Tab-02	2) Top & Bottom Panel
AAA77-111012-0C	3) Side Panel
AAA77-111013-0B	4) Chevron Cooling Manifold
	--Consisting of--
AAA77-111018-0A	(Ref.) Rectangular Tube
AAA77-108336-0C Tab-17	(Ref.) Bellows
AAA77-111041-0A Tab-01	5) Panel Outlet Transition
AAA77-111037-0B Tab-01	6) Chevron Crossfeed
AAA77-111009-0C	WELDMENT ASSY TAB-02
	--Consisting of 6 Dwgs.--
AAA77-111010-0B	1) Top Panel-Box Beam Weldment
	--Consisting of--
AAA77-111019-0A	Box Beam
AAA77-111011-0B Tab-01	Top & Bottom Panel
AAA77-111011-0B Tab-02	2) Top & Bottom Panel
AAA77-111012-0C	3) Side Panel
AAA77-111013-0B	4) Chevron Cooling Manifold
	--Consisting of--
AAA77-111018-0A	(Ref.) Rectangular Tube
AAA77-108336-0C Tab-17	(Ref.) Bellows
AAA77-111041-0A Tab-02	5) Panel Outlet Transition
AAA77-111037-0B Tab-02	6) Chevron Crossfeed
AAA77-111714-0B	Coupling Strap
AAA77-111715-0B	Cover Plate
AAA77-113558-0A	Half Coupling Strap
AAA78-100500-0A	Rear Cover Plate

-<u>Test Facility Stand</u>

J.O. #

Req. #1812-9

AAA78-100504-00	Wire Rope Assy
AAA78-100503-00	Brace
AAA78-100506-00	Test Facility Stand
AAA78-100505-00	Corner Support

-<u>LN2 Test Dewar</u>

J.O. #624890

AAA78-100507-00	LN2 Test Dewar

-<u>Cryopanel Module Bellows Tab-15</u>

J.O. #625095

AAA77-108336-0B	Bellows Tab-15

-100 Inch Tank Cover Rework (RECORD ONLY)

J.O. #625274

AAA77-113514-00	100 INCH TANK COVER REWORK (Ref.)
	--Consisting of--
AAA71-112661-00	100 Inch Tank Cover (Ref.)

-Cryopanel Module Plumbing

J.O. #626178

AAA77-111035-00 Tab-01	CHEV. DOWNCOMER 1L, 4L, 1R, 4R
	--Consisting of--
AAA77-111043-00	LN2 Feed 1L, 4L, 1R, 4R
AAA77-111035-00 Tab-02	CHEV. DOWNCOMER 1L, 4L, 1R, 4R
	--Consisting of--
AAA77-111043-00	LN2 Feed 1L, 4L, 1R, 4R
AAA77-111036-00 Tab-01	Panel Downcomer 1L, 4L, 1R, 4R
AAA77-111036-00 Tab-02	Panel Downcomer 1L, 4L, 1R, 4R
AAA77-111038-00 Tab-01	CHEV. DOWNCOMER 2L, 2R
	--Consisting of--
AAA77-111044-00	LN2 Feed 2L, 2R
AAA77-111038-00 Tab-02	CHEV. DOWNCOMER 2L, 2R
	--Consisting of--
AAA77-111044-00	LN2 Feed 2L, 2R
AAA77-111039-00 Tab-01	Panel Downcomer 2L, 3L, 2R, 3R
AAA77-111039-00 Tab-02	Panel Downcomer 2L, 3L, 2R, 3R
AAA77-111040-00 Tab-01	CHEV. DOWNCOMER 3L, 3R
	--Consisting of--
AAA77-111045-00	LN2 Feed 3L, 3R
AAA77-111040-00 Tab-02	CHEV. DOWNCOMER 3L, 3R
	--Consisting of--
77-111045-00	LN2 Feed 3L, 3R
AAA77-111042-00	Panel Outlet Lateral
AAA77-111046-00 Tab-01	REC. TUBE EXTENDER 2L, 2R, 3L, 3R
	--Consisting of--
77-111018-00	Tube, Rec. (Ref.)
AAA77-111046-00 Tab-02	REC. TUBE EXTENDER 2L, 2R, 3L, 3R
	--Consisting of--
AAA77-111018-00	Tube, Rec. (Ref.)
AAA77-111047-00 Tab-01	Panel Downcomer 3L, 3R
AAA77-111047-00 Tab-02	Panel Downcomer 3L, 3R

C.O. #626178-1

WAS	WAS
AAA77-111035-00 Tab-01	Chev. Downcomer 1L, 4L, 1R, 4R
IS NOW	IS NOW
AAA77-111035-0A	Chev. Downcomer 1L, 4R
WAS	WAS
AAA77-111035-00 Tab-02	Chev. Downcomer 1L, 4L, 1R, 4R
IS NOW	IS NOW
AAA78-107675-00	Chev. Downcomer 4L, 1R
WAS	WAS
AAA77-111038-00 Tab-01	Chev. Downcomer 2L, 2R
IS NOW	IS NOW
AAA77-111038-0A	Chev. Downcomer 2L
WAS	WAS
AAA77-111038-00 Tab-02	Chev. Downcomer 2L, 2R
IS NOW	IS NOW
AAA78-107667-00	Chev. Downcomer 2R
WAS	WAS
AAA77-111040-00 Tab-01	Chev. Doncomer 3L, 3R
IS NOW	IS NOW
AAA77-111040-0A	Chev. Downcomer 3L
WAS	WAS
AAA77-111040-00 Tab-02	Chev. Downcomer 3L, 3R
IS NOW	IS NOW
AAA78-107668-00	Chev. Downcomer 3R

-100 Inch Tank Cover Rework

J.O. #626179

AAA77-113514-0A	100" TANK COVER REWORK
	--Consisting of--
AAA71-112661-00	100" Tank Cover (Ref.)
AAA78-103969-00	UPPER LN COUPLING SUPPORT BAR

C.O. #626179-1

AAA77-113514-0B	100" TANK COVER REWORK
	--Consisting of--
AAA71-112661-00	100" Tank Cover (Ref.)
AAA78-111351-00	Flange, 7.50 O
AAA78-110491-00	LHe BAYONET ASSY
	--Consisting of--
AAA78-110497-00	Compression Adapter, 1 5/8 Thd.
AAA78-110487-00	Compression Nut 1 5/8 Thd.
AAA78-110499-00	BRACKET, COVER
AAA78-110493-00	FLANGE, 6" O, BOTTOM
AAA78-111353-00	LHe DEWAR ASSY
	--Consisting of--
AAA78-110470-00	LHe Fill-Vent Assy
	--Consisting of--
AAA78-110471-00	Cover, LHe
	--Consisting of--
AAA78-111358-00	Compression Adapt. .75 Thd
AAA78-110475-00	Compression Adapt. .88 Thd
AAA78-110472-00	Flange, Marman, LHe
AAA78-110474-00	Compression Nut .88 Thd
AAA78-111357-00	Compression Nut .75 Thd
AAA78-110473-00	Vent Elbow, LHe
AAA78-103961-00	STRAP & LEG ASSY
	--Consisting of--
AAA78-103960-00	Helium Dewar Leg
AAA78-111356-00	LHe SHIELD ASSY
	--Consisting of--
AAA78-111354-00 Tab-01	Shield Disc, LHe
AAA78-111354-00 Tab-02	Shield Disc, LHe
AAA78-111355-00	Shield Shaft
AAA78-110489-00	LHe VALVE ASSY
	--Consisting of--
AAA78-110490-00	LHe Plug, Valve
AAA78-111359-00	LN2 FLANGE ASSY
	--Consisting of--
AAA78-111360-00	Flange, 7 1/2 Dia.
AAA78-110488-00	Compression Adapt. 1 3/8 Thd.
AAA78-110496-00	LN2 Filler Tube
AAA78-110486-00	Compression Nut, 1 3/8 Thd.
AAA78-111362-00	LN2 VALVE ASSY
AAA78-110492-00	LN2 FLANGE, ELEC. CONN.
AAA78-110495-00	FLANGE ASSY. ELEC. CONN.
	--Consisting of--
AAA78-110494-00 Tab-01	Flange 6.00 Dia.
AAA78-110494-00 Tab-02	FLANGE 6.00 DIA
AAA78-111369-00	LHe VENT TEE
AAA78-110498-00	BRACKET, CRYOPANEL SIDE
AAA78-111350-00	BRACKET, BRACE TO COVER
AAA78-111352-00	BRACKET, CRYOPANEL SIDE, TOP

-LN2 Manifold-Upper Coupling

J.O. #626180

AAA77-111678-0A	UPPER LN COUPLING
	--Consisting of--
AAA77-111679-0B	Feed Thru Flange
AAA77-108336-0B	Bellows Tab-07 (Ref.)
AAA77-108336-0B	Bellows Tab-04 (Ref.)
AAA78-103970-00	Upper LN Coupling Nut

-Cryopanel Module Assembly Hardware

J.O. #626638

AAA78-100501-00	Backing Bar
AAA78-100502-00	Horizontal Lifting Fixture Tab-01
AAA78-100502-00	Horizontal Lifting Fixture Tab-02
AAA78-100502-00	Horizontal Lifting Fixture Tab-03
AAA78-103962-00	Helium Panel Mounting Bolt
AAA78-103963-00	Sway Rod Tooling
AAA78-103964-00	Main Support Backing Bar
AAA77-113538-00	Support Mount
AAA77-113555-00	Spacer
AAA77-113574-00	Helium Panel Sway Limiter
AAA77-113575-00	Helium Panel Sway Rod
AAA78-107663-00 Tab-01	Carbon Glass Resistor Mounting Block
AAA78-107663-00 Tab-02	Carbon Glass Resistor Mounting Block

-LHe Main Dewar Assy

J.O. #626962

AAA77-113510-00	MAIN DEWAR ASSY
	--Consisting of 13 Dwgs--
AAA77-113505-00	1) Outer Shell Extension
AAA77-113509-00	2) Head, Nitrogen
AAA77-111709-00	3) Housing Plug
AAA77-111704-00	4) Tie Rod (Ref.)
AAA78-103958-00	5) Tube Segment
AAA78-107666-00	6) Cover Disc
AAA77-111243-00 Tab-01	7) Tank Support Leg
AAA77-111243-00 Tab-02	8) Tank Support Leg
AAA78-107664-00	9) Lifting Eye
AAA78-100544-00	10) Burst Disc Mod (Ref.)
AAA78-103972-00	11) DEWAR HEAD WELDMENT (OUTER)
	--Consisting of 4 Dwgs--
AAA77-111705-00	1) Tie Rod Housing (Outer)
AAA77-111708-00 Tab-02	2) Dewar Head Stiffener
AAA78-103959-00	3) Slotted Tube
AAA77-111702-00 Tab-02	4) DEWAR HEAD MATCH BORE
	--Consisting of 1 Dwg.--
AAA77-111703-00 Tab-02	1) Dewar Head
AAA78-103971-00	12) DEWAR HEAD WELDMENT (INNER)
	--Consisting of 4 Dwgs--

AAA77-111709-00	1) Housing Plug
AAA77-111706-00	2) Tie Rod Housing (Inner)
AAA77-111708-00 Tab-01	3) Dewar Head Stiffener
AAA77-111702-00 Tab-01	4) DEWAR HEAD MATCH BORE
	--Consisting of 1 Dwg--
AAA77-111703-00 Tab-01	1) Dewar Head
AAA77-111682-00	13) INTERNAL PLUMBING ASSY
	--Consisting of 17 Dwgs--
AAA78-100537-00	1) Valve Lower Flange
AAA77-111668-00	2) Flange 12" Dia.
AAA78-100521-00 Tab-01	3) Phase Separator
AAA78-100521-00 Tab-02	4) Phase Separator
AAA77-111204-00 Tab-01	5) Valve End Cap
AAA77-111204-00 Tab-02	6) Valve End Cap
AAA77-111202-00	7) Diverter Valve Housing (Ref.)
AAA77-111208-00	8) Bushing
AAA77-111220-00 Tab-04	9) Tube, Dewar 8" Dia
AAA77-111711-00	10) Inlet Adapter
AAA78-100538-00 Tab-02	11) Burst Port Reinforcement
AAA77-111673-00	12) RETURN CONNECTING TUBE
	--Consisting of 1 Dwg--
AAA77-108336-0C Tab-11	1) Bellows (Ref.)
AAA77-111672-00	13) SUPPLY CONNECTING TUBE
	--Consisting of 1 Dwg--
AAA77-108336-0C Tab-11	1) Bellows (Ref.)
AAA78-103906-00	14) CHILL RING ASSY
	--Consisting of 3 Dwgs--
AAA77-108336-0C Tab-14	1) Bellows (Ref.)
AAA77-111207-00 Tab-03	2) Chill Ring
AAA77-111205-00 Tab-05	3) Valve Tubing - Tabulated
AAA78-100516-00	15) SUPPLY & RETURN ADAPTER ASSY
	--Consisting of 3 Dwgs--
AAA78-103952-00	1) Outer Supply & Return Adapter
AAA78-103953-00	2) Supply & Return Adapter
AAA77-108336-0C Tab-19	3) Bellows (Ref.)
AAA78-100542-00	16) BURST PORT ASSY
	--Consisting of 4 Dwgs--
AAA78-100541-00	1) Upper Burst Adapter
AAA78-100539-00	2) Upper Adapter Tube
AAA77-111205-00 Tab-06	3) Valve Tubing Tabulated
AAA77-108336-0C Tab-21	4) Bellows (Ref.)

AAA77-111664-00		17) CENTER SECTION & TANK ASSY
		--Consisting of 14 Dwgs--
AAA78-100514-00		1) Nitrogen Liner
AAA77-111220-00	Tab-02	2) Tube, Dewar 8" Dia
AAA77-111220-00	Tab-03	3) Tube, Dewar 8" Dia
AAA77-111657-00		4) Adjustment Rod
AAA77-111668-00		5) Flange 12" Dia
AAA77-111669-00		6) Access Cover Plate
AAA77-111746-00		7) Flange-Upper Bayonet
AAA78-107690-00		8) Sensor Location Drawing
	Ref.	
AAA78-107663-00	Tab-01	9) C.G.R. Mounting Block
AAA78-107663-00	Tab-02	10) C.G.R. Mounting Block
AAA77-111020-00		11) LOWER BAYONET SUB-ASSY
		--Consisting of 6 Dwgs--
AAA77-111021-00		1) Lower Bayonet Flange
AAA77-111049-00		2) Lower Bayonet Cone
AAA77-111022-00		3) Lower Bayonet Shield
AAA77-111023-00		4) Copper Short
AAA77-108336-0C	Tab-09	5) Bellows (Ref.)
AAA78-100519-00		6) Flange Nose
AAA78-100526-00		12) OUTER TANK
		--Consisting of 1 Dwg--
AAA77-111656-00		1) Sleeve, Adjust. Rod
AAA77-111292-00		13) INNER TANK ASSY
		--Consisting of 10 Dwgs--
AAA77-111294-00		1) Inner Tank Shell
AAA77-111651-00		2) Tube, Inlet Supply
AAA78-100538-00	Tab-01	3) Burst Port Reinforcement
AAA77-111298-00		4) Flange 8 1/4" Dia
AAA77-111200-00		5) Throttle Valve Seat
AAA77-111201-00		6) Valve Mounting Flange
AAA78-100543-00		7) Burst Port Adapter
AAA77-111299-00		8) Flange 6 1/2" Dia
AAA77-111206-00		9) Funnel
AAA77-111296-00		10) EXPANSION RING ASSY
		--Consisting of 3 Dwgs--
AAA77-111297-00		1) Expansion Ring
AAA77-111652-00	Tab-01	2) Expansion Brace

AAA77-111652-00	Tab-02	3) Expansion Brace
AAA78-100520-00		14) INLET SOCKET & LOWER BAYONET ASSY
		--Consisting of 3 Dwgs--
AAA77-111670-00		1) Tube Splice
AAA77-111723-00		2) UPPER BAYONET SOCKET ASSY
		--Consisting of 10 Dwgs--
AAA77-111742-00		1) Tube Cap
AAA77-111743-00		2) Small Upper Socket
AAA77-111741-00		3) Tube, Upper Housing
AAA77-111745-00		4) Housing, Upper Socket
AAA77-111666-00		5) Collar, Shroud
AAA77-111744-00		6) Outer Tube
AAA77-111000-00	Tab-02	7) Disc, Tube Enclosure
AAA78-100515-00		8) Exit Tube
AAA77-108336-0C	Tab-18	9) Bellows (Ref.)
AAA78-100517-00		10) ELBOW ASSY
		--Consisting of 1 Dwg--
AAA77-111712-00		1) Inlet Elbow
AAA77-108346-00		3) INNER ENCLOSURE TUBE ASSY
		--Consisting of 4 Dwgs--
AAA77-111008-00		1) Lower Return Tube
AAA77-111000-00	Tab-01	2) Disc, Tube Enclosure
AAA77-111001-00		3) Lower Return Tube Reinforcement
AAA77-108342-00		4) INLET DOWNTUBE ASSY
		--Consisting of 5 Dwgs--
AAA77-108343-00		1) Tube End Retainer
AAA77-108338-00		2) Inlet Box Bottom
AAA77-108341-00		3) Inlet Box Back Plate
AAA77-108339-00		4) Inlet Box Top
AAA77-108340-00		5) Inlet Downtube
AAA78-107684-00		ASSEMBLY FLOW DIAGRAM (REF.)

-LHe Main Dewar Assy Bellows Tab 18-21

J.O. #626980

AAA77-108336-0C	Bellows Tab-18
AAA77-108336-0C	Bellows Tab-19
AAA77-108336-0C	Bellows Tab-20
AAA77-108336-0C	Bellows Tab-21

-LHe Main Dewar Assy Div. Valve/Burst Disc

J.O. #626981

AAA77-111202-00	Diverter Valve Housing
AAA78-100544-00	Burst Disc Modification

-BB2 Test Stand

J.O. #627723		
AAA78-100506-0A		TEST FACILITY STAND
		--Consisting of--
	AAA78-100505-0A Tab-01	Corner Support (Ref.)
	AAA78-100503-0A Tab-01	Brace (Ref.)
	AAA78-100505-0A Tab-02	Corner Support
	AAA78-100505-0A Tab-03	Corner Support
	AAA78-100503-0A Tab-02	Brace
	AAA78-100504-00	Wire Rope Assy (Ref.)

-Cryopanel Test Stand

J.O. #628099	
AAA78-100505-0A	Corner Support Tab-02
AAA78-100505-0A	Corner Support Tab-03
AAA78-100503-0A	Brace Tab-02
AAA78-100505-0A	Corner Support Tab-01
AAA78-100503-0A	Brace Tab-01

-Chevron II Weld Ass'y

J.O. #628564		
AAA78-113874-00		CHEVRON II WELD ASSY TAB-01
		--Consisting of--
	AAA78-113872-00	1) Chevron II Tab-01
	AAA78-113872-00	2) Chevron II Tab-02
	AAA77-111009-0C	3) Weldment Assy Tab-01 (Ref.)
AAA78-113874-00		CHEVRON II WELD ASSY TAB-02
		--Consisting of--
	AAA78-113872-00	1) Chevron II Tab-01
	AAA78-113872-00	2) Chevron II Tab-02
	AAA78-111009-0C	3) Weldment Assy Tab-02 (Ref.)
C.O. #113874-0A		CHEVRON II WELD ASSY TAB-01
		--Consisting of --
	AAA119720-00	(4) Top Rear Cover Plate

-Helium Dewar - Upper Bayonet (LBL)

J.O. #628739		
AAA78-111366-00		UPPER BAYONET ASSY (LBL)
		--Consisting of--
	AAA77-111255-00	1) End Retainer
	AAA77-111023-00	2) Copper Short
	AAA77-111253-00	3) Tube, Upper Bayonet
	AAA77-111249-00	4) Top Flange
	AAA77-111250-00	5) Top Plate, Inner

-Helium Dewar - Lower Socket

J.O. #628742

AAA77-108345-00	LOWER SOCKET ASSY
	--Consisting of--
AAA77-108348-00	1) Lower Socket Flange
AAA77-108347-00	2) Lower Socket Support Tube
AAA77-108349-00	3) Lower Socket
AAA77-111002-00	4) Lower Supply Tee
AAA77-111666-00	5) Shroud Collar
AAA77-111222-00	6) Insert Flange Assy
	--Consisting of--
AAA77-111221-00	1) Flange, Cylinder Bayonet

-Helium Dewar - Upper Bayonet

J.O. #628754

AAA77-113503-00	BAYONET TIP ASSY
	--Consisting of--
AAA77-113501-00	1) Large Male Tip
AAA77-113500-00	2) Small Tip Screw
AAA77-113502-00	3) Tip Coupling
AAA77-108336-0C	4) Bellows Tab-05 (Ref.)
AAA77-108336-0C	5) Bellows Tab-01 (Ref.)
AAA78-110452-00	6) Bushing
AAA78-100522-00	SMALL TIP ASSY
	--Consisting of--
AAA78-100523-00	1) Small Bayonet Tip
AAA78-100524-00	2) Small Tip Adapter
AAA77-108336-0C	3) Bellows Tab-20 (Ref.)

-Lid Holder Stand Assy

J.O. #628786

AAA78-113883-00	Stand Weldment
AAA78-113889-00	Corner Foot
AAA78-113878-00	Mount Plate Tab-01
AAA78-113879-00	Upper "I" Beam Bracket Tab-01
AAA78-113879-00	Upper "I" Beam Bracket Tab-02
AAA78-113880-00	Lower "I" Beam Bracket
AAA78-113888-00	Upper "I" Beam Support
AAA78-113887-00	Lower "I" Beam Support
AAA78-113881-00	Base Mount Plate
AAA78-113878-00	Mount Plate Tab-02

C.O. #628786-1

AAA78-113883-0A	Stand Weldment
AAA78-113891-00	Wire Rope Assy Tab-01
AAA78-113891-00	Wire Rope Assy Tab-02
AAA78-113892-00	Stud Location (Ref.)

-Cryopanel Array
J.O. #628876

AAA77-113571-00	Lower Support Location Tooling
AAA77-113572-00	Outboard Roof Support
AAA77-113569-00	Lower Support Pin
AAA77-113573-00	Upper Support Pin
AAA77-113577-00	Inboard Roof Support
AAA77-113576-00	Support Beam
AAA78-113885-00	Module Support Rod Tab-01
AAA78-113885-00	Module Support Rod Tab-02
AAA78-113886-00	Outboard Support Tooling

-LHe Main Dewar
J.O. #629036

AAA77-111704-00	Tie Rod

-Stand Insert
J.O. #629110

AAA78-113890-00	Oilon Insert

-LHe Burst Disc
J.O. #629370

AAA77-108336-0D	Bellows Tab-22

-Helium Dewar-Support
J.O. #629622

AAA77-111244-00	He TANK LEG GUIDE PIN TAB-01
	--Consisting of--
AAA77-111245-00	1) Adjustable Flange
AAA77-111246-00	2) Pin Base
AAA78-103988-00	3) Guide Pin Nose

-Cryopanel Array-Support Rod Assy
J.O. #629623

AAA78-117870-00	SUPPORT ROD ASSY TAB-01
	--Consisting of--
AAA78-113885-00	Module Support Rod Tab-01
AAA78-117870-00	SUPPORT ROD ASSY TAB-02
	--Consisting of--
AAA78-113885-00	Module Support Rod Tab-02

-Helium Dewar Diverter Valve
J.O. #629659

AAA78-117875-00	DIVERTER VALVE STEM ASSY
	--Consisting of--
AAA77-111205-0A	1) Valve Tubing Tab-01
AAA78-117873-00	2) Lower Guide
AAA78-117872-00	3) Lower Solid Seat - Tube
AAA78-117879-00	4) INTERMEDIATE VALVE WELDMENT
	--Consisting of--
AAA78-117878-00	1) Bellows Seat-Bottom
AAA78-117877-00	2) Bellows Seat-Top
AAA78-117876-00	3) Pin, Bellows Seat-Top
AAA77-111027-00	5) Floating Seat
AAA78-117871-00	6) Cap Threaded
AAA78-117874-00	7) Upper Assy
AAA78-111212-00	8) Tube Cap

-Magnet Assy/Baffles

J.O. #630377

AAA78-119729-00	Lower Magnet Baffle Tab-01
AAA78-119729-00	Lower Magnet Baffle Tab-02
AAA78-119730-00	Bottom Magnet Baffle
AAA78-119731-00	Magnet Side Baffle Tab-01
AAA78-119731-00	Magnet Side Baffle Tab-02
AAA78-119732-00	Magnet Baffle Extension
AAA78-119733-00	Magnet Top Baffle

-Cryopump Assy/Shroud

J.O. #630602

AAA78-120516-00	Bottom Shroud Modules 3 & 4 Tab-01
AAA78-120516-00	Bottom Shroud Modules 3 & 4 Tab-02
AAA78-120517-00	Bottom Shroud Modules 1 & 2 Tab-01
AAA78-120517-00	Bottom Shroud Modules 1 & 2 Tab-02
AAA78-120518-00	Top Shroud Modules 1 & 2 Tab-01
AAA78-120518-00	Top Shroud Modules 1 & 2 Tab-02
AAA78-120519-00	Top Shroud Modules 3 & 4 Tab-01
AAA78-120519-00	Top Shroud Modules 3 & 4 Tab-02

-He Dewar-Diverter Valve/Diverter Valve Drive Assy (LBL)

J.O. #630634

AAA78-110478-00	DIVERTER VALVE DRIVE ASSY
	--Consisting of--
AAA78-119709-00	1) Connector Retainer
AAA78-110479-00	2) Upper Drive Yoke
AAA78-110480-00	3) Lower Drive Yoke
AAA78-110481-00	4) Actuator Foot
AAA78-119715-00	5) Pot. Lift Bracket
AAA78-119716-00	6) Pot. Mount Bracket
AAA77-111213-00	7) VALVE STEM & BELLOWS ASSY
	--Consisting of--
AAA78-117875-00	1) Div. Valve Stem Assy (Ref)
AAA77-111003-00	2) THROTTLE VALVE STEM ASSY
	--Consisting of--
AAA77-111205-0B	1) Valve Tubing Tab-02
AAA77-111006-00	2) Stop Ring
AAA77-111005-00	3) Small Tube Cap
AAA77-111004-00	4) Retaining Ring-Small
AAA77-111207-0A	3) Chill Ring Tab-02
AAA77-111207-0A	4) Chill Ring Tab-01
AAA77-111203-00	5) Valve Upper Flange
AAA78-119279-00	6) LOWER BELLOWS MODIFICATION
	--Consisting of--
AAA77-108336-0D	1) Bellows Tab-13 (Ref.)
AAA77-111205-0B	7) Valve Tubing Tab-03
AAA77-111216-00	8) THROTTLE VALVE BELLOWS ASSY
	--Consisting of--
AAA77-111205-0B	1) Valve Tubing Tab-04
AAA77-111215-00	2) Lower Thrust Flange
AAA77-111214-00	3) Upper Thrust Flange
AAA78-119278-00	4) UPPER BELLOWS MODIFICATION
	--Consisting of--

AAA77-108336-0D	1) Bellows Tab-12
AAA77-111674-00	9) THROTTLE ASSY
	--Consisting of--
AAA77-111676-00	1) Lower Throttle
AAA78-111368-00	DIVERTER VALVE ASSY FLOW DIAGRAM (REF)

-Cryopumping System/Baffles

J.O. #630638

AAA78-120475-00	Upper Baffle Tie
AAA78-120476-00	#2 Baffle Brace
AAA78-120477-00	#1 Baffle Lower Brace Tab-01
AAA78-120477-00	#1 Baffle Lower Brace Tab-02
AAA78-120478-00	#1 Baffle Upper Brace Tab-01
AAA78-120478-00	#1 Baffle Upper Brace Tab-02
AAA78-120479-00	Magnet Baffle Front Brace
AAA78-120480-00	Magnet Baffle Rear Brace
AAA78-120481-00	Source End Guide
AAA78-120482-00	Baffle Tie Tab-01
AAA78-120482-00	Baffle Tie Tab-02
AAA78-120483-00	Baffle Brace Support
AAA78-120484-00	Baffle Standoff Tab-01
AAA78-120484-00	Baffle Standoff Tab-02
AAA78-120485-00	#2 Baffle
AAA78-120486-00	#2 Baffle Vertical Extension
AAA78-120487-00	#2 Baffle Side Extension
AAA78-120488-00	#1 Baffle Bottom Extension
AAA78-120489-00	#1 Lower Baffle
AAA78-120490-00	Baffle #1 Side Extension (Lower)
AAA78-120491-00	Baffle Hatch Cover
AAA78-120492-00	#1 Baffle (Upper)
AAA78-120493-00	#1 Baffle Side Extension (Upper)
AAA78-120494-00	#1 Baffle to Magnet Extension
AAA78-120495-00	Lower Baffle Extension (Short)
AAA78-120496-00	Wiper Bracket Tab-01
AAA78-120496-00	Wiper Bracket Tab-02
AAA78-120497-00	#1 Baffle to Magnet Wiper Tab-01
AAA78-120497-00	#1 Baffle to Magnet Wiper Tab-02
AAA78-120498-00	Source End Baffle Tab-01
AAA78-120498-00	Source End Baffle Tab-02
AAA78-120499-00	Source End Guide
AAA78-120500-00	Upper Baffle Extension (Short)
AAA78-120501-00	Magnet Wiper Support Tab-01
AAA78-120501-00	Magnet Wiper Support Tab-02
AAA78-120502-00	Magnet Wiper (Long) Tab-01
AAA78-120502-00	Magnet Wiper (Long) Tab-02
AAA78-120503-00	Magnet Wiper (Short) Tab-01
AAA78-120503-00	Magnet Wiper (Short) Tab-02
AAA78-120504-00	Magnet Wiper (Medium)
AAA78-120505-00	Magnet Wiper (Lower) Tab-01
AAA78-120505-00	Magnet Wiper (Lower) Tab-02
AAA78-120506-00	#1 Baffle Cross Brace
AAA78-120507-00	Baffle Flap Support
AAA78-120508-00	#1 Baffle Wiper
AAA78-120509-00	Baffle Flap (Magnet)

AAA78-120510-00	Baffle Flap Side Cover
AAA78-120511-00	Baffle Flap (Table)
AAA78-120512-00	Lower Baffle Ext. (Long) Tab-01
AAA78-120512-00	Lower Baffle Ext. (Long) Tab-02
AAA78-120513-00	Upper Baffle Ext. (Long) Tab-01
AAA78-120513-00	Upper Baffle Ext. (Long) Tab-02
AAA78-120514-00	Lower Baffle Tie Tab-01
AAA78-120514-00	Lower Baffle Tie Tab-02
AAA78-120515-00	Baffle Extension (Shroud)

-Cryopump Array
J.O. #630692

AAA78-120960-00	Sway Bar Shim
AAA78-120961-00	Sway Bar
AAA78-120962-00	Sway Pin
AAA78-120963-00	Sway Bracket Tab-01
AAA78-120963-00	Sway Bracket Tab-02

-Cryopump Assy/Shroud
J.O. #630694

AAA78-120767-00	Line Mask Tab-01
AAA78-120767-00	Line Mask Tab-02
AAA78-120767-00	Line Mask Tab-03
AAA78-120772-00	LHe Line Reducer
AAA78-120773-00	Vertical Shroud J-Box Tab-01
AAA78-120773-00	Vertical Shroud J-Box Tab-02
AAA78-120774-00	Bottom Span J-Box Tab-01
AAA78-120774-00	Bottom Span J-Box Tab-02
AAA78-121000-00	Joint Mask
AAA78-121001-00	Strong Back Tab-01
AAA78-121001-00	Strong Back Tab-02
AAA78-121002-00	Support
AAA78-121003-00	Vertical Shroud
AAA78-121004-00	Top Shroud-Span Tab-01
AAA78-121004-00	Top Shroud-Span Tab-02
AAA78-121005-00	Bottom Shroud-Span Tab-01
AAA78-121005-00	Bottom Shroud-Span Tab-02
AAA78-121006-00	Bottom Shroud-Crossover
AAA78-121007-00	Socket Shroud-Top
AAA78-121008-00	Socket Shroud-Bottom Tab-01
AAA78-121008-00	Socket Shroud-Bottom Tab-02
AAA78-121009-00	Top Shroud J-Box Tab-01
AAA78-121009-00	Top Shroud J-Box Tab-02
AAA78-121010-00	Bottom Shroud J-Box Tab-01
AAA78-121010-00	Bottom Shourd J-Box Tab-02
AAA78-121011-00	Joint
AAA78-121012-00	Span Seal Tab-01
AAA78-121012-00	Span Seal Tab-02
AAA78-121012-00	Span Seal Tab-03
AAA78-121012-00	Span Seal Tab-04
AAA78-121013-00	Shroud Guide
AAA78-121014-00	Cross Over Trace
AAA78-121015-00	Riser Trace
AAA78-120759-00	Span J-Box Seal

-Cryopump Assy

J.O. #630937

AAA79-101417-00	Trace Feed Thru (LN)
AAA79-101418-00	Trace Manifold (LN)

-Cryopanel Module Assembly/Stages 1 thru 4

J.O. #631186

AAA78-108824-00	ASSEMBLY STAGE 4 TAB-01
	--Consisting of--
AAA77-111718-0B	1) LN_2 Panel Assy
AAA78-119722-00	2) Cover Strip
AAA77-113558-0A	3) Half Coupling Strap
AAA77-113555-00	4) Spacer
AAA78-100502-00	5) Horiz. Lifting Fixture Tab-03
AAA78-119721-00	6) C.G.R. Mounting Block
AAA78-108823-00	7) ASSEMBLY STAGE 3 TAB-01
	--Consisting of--
AAA78-103962-00	1) He Panel Mounting Bolt
AAA77-113574-00	2) He Panel Sway Limiter
AAA77-113575-00	3) He Panel Sway Rod
AAA78-103963-00	4) Sway Rod Tooling
AAA78-119721-00	5) C.G.R. Mounting Block
AAA77-111717-0C	6) LHe PANEL ASS'Y
	--Consisting of--
AAA77-113511-0A	1) Panel Support Bracket
AAA78-108822-00	7) ASS'Y STAGE 2 TAB-01
	--Consisting of--
AAA78-119721-00	1) C.G.R. Mtg. Block
AAA78-108821-00	2) ASS'Y STAGE 1 TAB-01
	--Consisting of--
AAA78-100501-00	Backing Bar
AAA78-100502-00	Horiz. Lifting Fix. Tab-01
AAA78-113874-0A	Chevron II Weld Assy Tab-01
	--Consisting of Parts shown on J.O. #628564 & C.O. #628564-1.
AAA78-108824-00	ASSEMBLY STAGE 4 TAB-02
	--Consisting of--
AAA77-111718-0B	1) LN_2 Panel Assy
AAA78-119722-00	2) Cover Strip
AAA77-113558-0A	3) Half Coupling Strap
AAA77-113555-00	4) Spacer
AAA78-100502-00	5) Horiz. Lifting Fix Tab-03
AAA78-119721-00	6) C.G.R. Mounting Block
AAA78-108823-00	7) ASSEMBLY STAGE 3 TAB-02
	--Consisting of--
AAA78-103962-00	1) He Panel Mounting Bolt
AAA77-113574-00	2) He Panel Sway Limiter
AAA77-113575-00	3) He Panel Sway Rod
AAA78-103963-0D	4) Sway Rod Tooling
AAA78-119721-00	5) C.G.R. Mounting Block

AAA77-111717-0C	6) LHe PANEL ASS'Y --Consisting of--
AAA77-113511-0A	1) Panel Support Bracket
AAA78-108822-00	7) ASS'Y STAGE 2 TAB-02 --Consisting of--
AAA78-119721-00	1) C.G.R. Mounting Block
AAA78-108821-00	2) ASS'Y STAGE 1 TAB-02 --Consisting of--
AAA78-100501-00	Backing Bar
AAA78-100502-00	Horiz. Lifting Fix Tab-01
AAA78-113874-0A	Chevron II Weld Assy Tab-02 --Consisting of Parts shown on J.O. #628564 & C.O. #628564-1.

-Stand & Module Ass'y/Cryopanel Modules

J.O. #631248

AAA77-111029-00	CRYOPANEL MODULES 1L & 4R --Consisting of--
AAA78-108824-00	1) Ass'y Stage 4 Tab-01 Consisting of Parts shown on J.O. #631186
AAA77-111035-0A	2) Chev. Downcomer 1L, 4R Consisting of Parts shown on J.O. #626178
AAA77-111036-00	3) Panel Downcomer 1L, 4R Tab-01
AAA77-111042-00	4) Panel Outlet Lateral
AAA77-108336-0E	5) Bellows Tab-16
AAA77-111678-0A	6) Upper LN Coupling Consisting of Parts shown on J.O. #626180
AAA77-111031-00	CRYOPANEL MODULE 2L --Consisting of--
AAA78-108824-00	1) Ass'y Stage 4 Tab-01 Consisting of Parts shown on J.O. #631186
AAA77-111038-0A	2) Chevron Downcomer 2L Consisting of Parts shown on J.O. #626178
AAA77-111039-00	3) Panel Downcomer 2L Tab-01
AAA77-111042-00	4) Panel Outlet Lateral
AAA77-111046-00	5) Rect. Tube Extender Tab-01 Consisting of Parts shown on J.O. #626178
AAA77-108336-0E	6) Bellows Tab-16
AAA77-111678-0A	7) Upper LN Coupling Consisting of Parts shown on J.O. #626180

AAA77-111034-00	CRYOPANEL MODULE 3R
	--Consisting of--
AAA78-108824-00	1) Ass'y Stage 4 Tab-01 Consisting of Parts shown on J.O. #631186
AAA78-107668-00	2) Chevron Downcomer 3R Consisting of Parts shown on J.O. #626178
AAA77-111047-00	3) Panel Downcomer 3R Tab-02
AAA77-111042-00	4) Panel Outlet Lateral
AAA77-111046-00	5) Rect. Tube Extender Tab-02 Consisting of Parts shown on J.O. #626178
AAA77-108336-0E	6) Bellows Tab-16
AAA77-111678-0A	7) Upper LN Coupling Consisting of Parts shown on J.O. #626180
AAA77-111030-00	CRYOPANEL MODULES 4L & 4R
	--Consisting of--
AAA78-108824-00	1) Assembly Stage 4 Tab-02 Consisting of Parts shown on J.O. #631186
AAA78-107675-00	2) Chevron Downcomer 4L, 1R Consisting of Parts shown on J.O. #626178
AAA77-111036-00	3) Panel Downcomer 4L, 1R Tab-02
AAA77-111042-00	4) Panel Outlet Lateral
AAA77-108336-0E	5) Bellows Tab-16
AAA77-111678-0A	6) Upper LN Coupling Consisting of Parts shown on J.O. #626180
AAA77-111032-00	CRYOPANEL MODULE 2R
	--Consisting of--
AAA78-108824-00	1) Assembly Stage 4 Tab-02 Consisting of Parts shown on J.O. #631186
AAA78-107667-00	2) Chevron Downcomer 2R Consisting of Parts shown on J.O. #626178
AAA77-111039-00	3) Panel Downcomer 2R Tab-02
AAA77-111042-00	4) Panel Outlet Lateral
AAA77-111046-00	5) Rect. Tube Extender Tab-01 Consisting of Parts shown on J.O. #626178
AAA77-108336-0E	6) Bellows Tab-16
AAA77-111678-0A	7) Upper LN Coupling Consisting of Parts shown on J.O. #626180

AAA77-111033-00	CRYOPANEL MODULE 3L
	--Consisting of--
AAA78-108824-00	1) Assembly Stage 4 Tab-02 Consisting of Parts shown on J.O. #631186
AAA77-111040-0A	2) Chevron Downcomer 3L Consisting of Parts shown on J.O. #626178
AAA77-111047-00	3) Panel Downcomer 3L Tab-01
AAA77-111042-00	4) Panel Outlet Lateral
AAA77-111046-00	5) Rect. Tube Extender Tab-02 Consisting of Parts shown on J.O. #626178
AAA77-108336-0E	6) Bellows Tab-16
AAA77-111678-0A	7) Upper LN Coupling Consisting of Parts shown on J.O. #626180

-Cryopumping System/Shield Panels

J.O. #631896

AAA79-101466-00	Cover Shield Panel #1 Tab-01
AAA79-101466-00	Cover Shield Panel #1 Tab-02
AAA79-101467-00	Cover Shield Panel #2 Tab-01
AAA79-101467-00	Cover Shield Panel #2 Tab-02
AAA79-101467-00	Cover Shield Panel #2 Tab-03
AAA79-101467-00	Cover Shield Panel #2 Tab-04
AAA79-101468-00	Cover Shield Panel #3 Tab-01
AAA79-101468-00	Cover Shield Panel #3 Tab-02
AAA79-101469-00	Cover Shield Panel #4 Tab-01
AAA79-101469-00	Cover Shield Panel #4 Tab-02
AAA79-101470-00	Cover Shield Panel #5 Tab-01
AAA79-101470-00	Cover Shield Panel #5 Tab-02
AAA79-101471-00	Cover Shield Panel #6 Tab-01
AAA79-101471-00	Cover Shield Panel #6 Tab-02
AAA79-101472-00	Floor Shield Panel #1 Tab-01
AAA79-101472-00	Floor Shield Panel #1 Tab-02
AAA79-101473-00	Floor Shield Panel #2 Tab-01
AAA79-101473-00	Floor Shield Panel #2 Tab-02
AAA79-101473-00	Floor Shield Panel #2 Tab-03
AAA79-101473-00	Floor Shield Panel #2 Tab-04
AAA79-101474-00	Floor Shield Panel #3 Tab-01
AAA79-101474-00	Floor Shield Panel #3 Tab-02
AAA79-101475-00	Floor Shield Panel #4 Tab-01
AAA79-101475-00	Floor Shield Panel #4 Tab-02
AAA79-101476-00	Floor Shield Panel #5 Tab-01
AAA79-101476-00	Floor Shield Panel #5 Tab-02
AAA79-101477-00	Floor Shield Panel #6 Tab-01
AAA79-101477-00	Floor Shield Panel #6 Tab-02
AAA79-101478-00	Floor Shield Panel #7 Tab-01
AAA79-101478-00	Floor Shield Panel #7 Tab-02
AAA79-101478-00	Floor Shield Panel #7 Tab-03
AAA79-101478-00	Floor Shield Panel #7 Tab-04
AAA79-101479-00	Source End Shield Panel #1 Tab-01

AAA79-101479-00	Source End Shield Panel #1 Tab-02
AAA79-101480-00	Source End Shield Panel #2 Tab-01
AAA79-101480-00	Source End Shield Panel #2 Tab-02
AAA79-101481-00	Source End Shield Panel #3 Tab-01
AAA79-101481-00	Source End Shield Panel #3 Tab-02
AAA79-101482-00	Front End Shield Panel #1 Tab-01
AAA79-101482-00	Front End Shield Panel #1 Tab-02
AAA79-101483-00	Front End Shield Panel #2 Tab-01
AAA79-101483-00	Front End Shield Panel #2 Tab-02
AAA79-101483-00	Front End Shield Panel #2 Tab-03
AAA79-101483-00	Front End Shield Panel #2 Tab-04
AAA79-101484-00	Front End Shield Panel #3 Tab-01
AAA79-101484-00	Front End Shield Panel #3 Tab-02
AAA79-101485-00	Front End Shield Panel #4 Tab-01
AAA79-101485-00	Front End Shield Panel #4 Tab-02
AAA79-101486-00	Side Wall Shield Panel Tab-01
AAA79-101486-00	Side Wall Shield Panel Tab-02

-Helium Dewar Support -02
J.O. #631898

AAA77-111244-00	He TANK LEG GUIDE PIN TAB-02
	--Consisting of--
AAA77-111245-00	1) Adjustable Flange
AAA77-111246-00	2) Pin Base
AAA78-103988-00	3) Guide Pin Nose

-LN Feed & Exhaust System - LBL
J.O. #632207

AAA79-101498-00	LN_2 FEED & EXHAUST SYSTEM-(LBL)
	--Consisting of 7 Dwgs--
AAA79-101459-00	1) Trace Flex Line
AAA79-101460-00	2) Vent Line
AAA79-101461-00	3) Main Line
AAA79-101462-00	4) Dewar Shroud Line
AAA79-101463-00	5) Dewar Return Line
AAA79-101464-00	6) LN_2 Valve Manifold (2 shts)

ADDITIONS TO J.O. FOR HELIUM DEWAR

This RFQ requires the vendor to fabricate, assemble and test the subject liquid helium dewar in accordance with the requirements given herein and the drawings. For reference, the basic performance parameters are as follows:

Operating temperature 3.8 to 4.5K
Relief pressure 75 psia internal (Tank and fittings 125 psia)
Capacity 750ℓ + 13% ullage
Weight 1700 lbs.

The following material is included herein:

A. Assembly sequence
B. General requirements
C. Alternative approaches
D. Documentation to be provided with quotation
E. Post-award documentation
F. University supplied material

A. ASSEMBLY SEQUENCE

A highly detailed set of sequential assembly drawings is included in the package. An overall assembly plan, (AAA78-107684) is included. In general, subassemblies (at the bottom of the tree) are built up into major assemblies and thereupon into final assemblies, working up the tree. Notes on these drawings provide the required detail.

The assembly sequence shown is not mandatory; vendors should feel free to modify it to suit their own production techniques. Likewise, in process leak checking is at vendor option.

B. GENERAL REQUIREMENTS

1. All welding is to be done in accordance with MEL76-001333, Welding of Stainless Steel Components for Vacuum Systems, or MEL77-001374, Welding of Aluminum Alloy Components for Vacuum Systems, except as noted.

2. All components with surfaces which during assembly become inaccessible shall be clean, free of particulate matter and maintained clean thereafter. This applies to surfaces which face either vacuum or cryogens. See Appendix A of MEL76-001333 for examples of proper cleaning procedures.

3. Superinsulation used in the assembly shall be adequate to maintain the heat load on the nitrogen liner (AAA78-100514) and heads (AAA77-113510) at less than 2.5×10^{-4} w/cm^2; and on the inner dewar (AAA77-111292) and heads (AAA78-103971) at less than 1×10^{-5} w/cm^2. Outgassing of the superinsulation shall be such as to require reevacuation of the vacuum space no oftener than once every 6 months.

4. An instrumentation harness is to be installed within the vacuum space (see AAA77-111664 and AAA78-107690) during final assembly stages. The University retains the option to send a representative to the vendor's facility to supervise the installation of this instrumentation.

5. Upon completion of assembly, the vacuum space of the assembly shall be evacuated using the means proposed by the vendor (see Section D) and approved by the University. The tank interior and LN_2 shroud shall be cooled to liquid nitrogen temperature. Liquid collected will be removed. The interior of the tank and the LN_2 shroud lines will then be pressurized to 60 psia maximum, 50 psia minimum with helium gas. During this period, the vacuum space shall be monitored with a helium mass spectrometer. No leak in excess of 2×10^{-9} atm-cc/sec will be permitted. The tank will then be allowed to warm to room temperature. This entire sequence will be repeated for a total of 3 tests. This testing is to be done at the vendor's facility.

6. Final testing with liquid helium will be done by the University. The assembly must meet the above leak rate specification throughout this test.

7. The vendor shall provide appropriate shipping protection so that at no time is the assembly subjected to accelerations in excess of 3 g (any axis). Accelerometers (of the go/no-go type) shall be installed at appropriate locations.

C. ALTERNATIVE APPROACHES

Vendors are invited to describe detail changes which do not impair dewar performance, interfaces, or quality of construction, and which in the vendor's opinion, result in substantial cost savings.

As an example, vendors may propose alternate means of supporting the inner dewar. The proposed support system should have the following minimum performance characteristics:

Support 5 g loads in 3 principle directions;

No adjustment required after initial alignment;

Heat load < 2 watts total (room temperature to LHe);

System effective spring constant K_E greater than 10^5 lb/inch (the system as designed has $K_E \approx 1.8 \times 10^5$ lb/inch).

D. DOCUMENTATION PROVIDED WITH QUOTATION

Vendors should include the following information in their quotations:

1. Proposed deviations from the existing design (including, for example, changes in tolerances or materials).
2. Proposed changes in major assembly sequences.
3. Stages in the assembly at which in-process leak checks are planned.
4. Type(s) of superinsulation to be used, and past experience by the vendor in achieving the unit heat load requirements. The method and degree of initial pumpdown of the vacuum space and long term vacuum maintenance characteristics should be included.

E. POST-AWARD DOCUMENTATION

The following information is to be provided by the successful bidder, at negotiated times following award, and is subject to University review and approval. Items 1-5 refer to MEL76-001333, Welding of Stainless Steel Components for Vacuum Systems.

1. Detailed welding procedures (Para. 3.1.1).
2. Detailed cleaning procedures (Para. 3.3.1).
3. Detailed leak checking procedures (Para. 4.2. and 4.2.1). LLL will retain the option to witness leak checks.
4. Detailed quality control procedures (Para. 4.3.).
5. Method of shipment and additional fixturing and/or crating required to prevent damage to the assembly and to maintain cleanliness. See Paragraph 5 of MEL76-001333.

F. UNIVERSITY SUPPLIED MATERIALS

The following materials will be supplied by the University. All other materials will be supplied by the vendor.

ITEM	DESCRIPTION	SHOWN ON	QTY
AAA77-108336 Tab-09	Bellows	77-111020	1
AAA77-108336 Tab-11	Bellows	77-111673 & 77-111672	2
AAA77-108336 Tab-18	Bellows	77-111723	1
AAA77-108336 Tab-19	Bellows	78-100516	2
AAA77-108336 Tab-21	Bellows	78-100542	1
AAA77-111202	Diverter Valve Housing	77-111682	1
AAA77-111704	Tie Rod	77-113510	8
AAA78-100544	Burst Disc Mod	77-113510	1

Instrumentation Harness used on 78-107690 and on 77-111664.	1
Deutsch Connector DM5324-37-P used on 77-111682.	1
Cryolab Connector CB7-84-5F31 used on 77-113510.	2

ADDITIONS TO MANIFOLD RFP (& P.O.)

A. The vendor is to submit the following information with his offer. References are to MEL 76-001333, Welding of Stainless Steel Components for Vacuum Systems. All welds in the system are to be in accordance with that specification.

1. Detailed welding procedures (para. 3.1.1)

2. Detailed cleaning procedures (para. 3.3.1) prior to welding. It is additionally required that all components with surfaces which during assembly become inaccessible shall be clean, free of particulate matter, and maintained clean thereafter. This applies both to surfaces which face vacuum and face cryogens. Examples of proper cleaning procedures are given in appendix A of MEL 76-001333. Vendors should describe in detail their proposed methods for implementation of these or comparable techniques.

3. Detailed leak checking procedures. (para. 4.2. and 4.2.1). LLL will retain the option to witness leak checks.

4. Detailed quality control procedures. (para. 4.3).

5. Superinsulation is required within the assembly (see Dwg. AAA 77-111721) Vendors should describe the type of superinsulation to be used, its method of application, outgassing products and net rate while system is at both ambient and operating temperature, and thermal performance, including effects of penetrations. A guaranteed maximum heat load for the superinsulation system is required.

6. Vendors should describe proposed method of shipment and additional fixturing and/or crating required to prevent damage to the assembly and to maintain cleanliness. See paragraph 5 of MEL 76-001333.

B. Further requirements are as follows:

1. Upon completion of assembly, the vacuum space of the assembly shall be evacuated to a pressure $\leq 10^{-5}$ torr. The manifold inner assembly shall be cooled to liquid nitrogen temperature. Liquid collected in the manifold will be removed. The interior will then be pressurized to 30 psia with helium gas. During this period the vacuum space shall be monitored with a helium mass spectrometer. No leak in excess of 2×10^{-10} atm-cc/sec will be permitted. The manifold will then be allowed to warm to room temperature. This entire sequence will be repeated for a total of 3 tests. This testing is to be at the vendor's facility.

2. The vendor shall provide appropriate shipping protection so that at no time is the assembly subjected to accelerations in excess of 3 g (any axis). Accelerometers (of the go/no-go type) shall be installed as appropriate.

vacuum valve (item)

C. The University will provide all bellows, bayonets, solenoid valves, and electrical connectors. All other components and material will be provided by the vendor.

ALLEN-FRY STEEL COMPANY

5524 ALCOA AVENUE – LOS ANGELES, CALIFORNIA 90058

TELEPHONE 582-0611

No. 009443

LBID 208 M5521 Page 55

DUNS 00-796-4869

CERTIFIED TEST REPORT

PAUL MUELLER CO
PO BOX 828
SPRINGFIELD, MO 65801

SHIP TO

1600 WEST PHELPS

SHIP TO SAME AS SOLD TO UNLESS OTHERWISE NOTED

NUMBER	CUSTOMER'S ORDER NUMBER	ORDER DATE	ENTERED BY	PARTIAL SHIPMENT ☐ / COMPLETE ORDER ☐	REQUIRING ATTN / NUMBER REQUIRED / WITH SHIPMENT ☐
	PO#2643	5-1-78	GAYLE P	BAL. ON	

MILL SOURCE	COLOR	SIZE & DESCRIPTION
Crucible	Pink & Blue	CF 316-L Ann Cond A 00S 763D AMS 5653A ASTM A-276-75 3/4" Sq. ASME SA-479 ASTM A-479-75

CHEMICAL ANALYSIS

HEAT NO.	C	MN	P	SU	SI	CR	NI	MO	VA	AL	SE	TI	CU	CB	COB
X90614	.015	1.63	.035	.027	.33	17.35	12.28	2.10					.25		

SWEV

PHYSICAL PROPERTIES

	YIELD LBS./SQ. IN.	TENSILE STRENGTH LBS./SQ. IN.	ELONG. % IN IN.	RED OF AREA %	BRINELL	ROCK. WELL	EHN GRAIN SIZE	DECARB	MACRO	MICRO	EMBR	HARDENABILITY
	84,500	99,800	43.0	71.0	217				OK	OK	OK	

INTERGRANULAR CORROSION TESTS OK

SUBSCRIBED AND SWORN TO BEFORE ME

THIS 16th DAY OF December 19 76 mc

OFFICIAL SEAL

NOTARY PUBLIC

IN AND FOR THE COUNTY OF LOS ANGELES, STATE OF CALIFORNIA

THE ALLEN-FRY STEEL CO. CERTIFIES THAT THIS IS A TRUE COPY OF THE ORIGINAL MILL TEST REPORT NOW ON FILE AND THAT THE SPECIALTY METAL COVERED BY THIS TEST REPORT WAS MELTED IN A STEEL MANUFACTURING FACILITY LOCATED IN THE UNITED STATES OR ITS POSSESSIONS.

BY Harold R. Mackey

AUTHORIZED CERTIFICATION CLERK

FORM TR-1

CHel7-0556

PACIFIC TUBE COMPANY
5710 Smithway Street
Los Angeles, California 90040

CERTIFICATE OF TESTS

Customer TUBESALES — Date December 27, 1973

Specification MILT 8808A AMEND 1 AMS 5576D & AMS5557B — PATCO Work Order No. 76143

Customer Order No. 3A-46211

Check Sheet No. 17456, 19974 — Quantity 2,454'7"

Item No. 2

Size 1.000" O.D. x .065" WALL — Analysis 321 WELDED & DRAWN TUBING

The following mandatory or capability tests are certified as complying with specification requirements:

A. CHEMICAL ANALYSIS: Ladle [X] and/or Check [X]

B. GRAIN SIZE: (See Below)

HEAT NO.	C	Mn	P	S	Si	Ni	Cr	Mo	Ti	Cb & Ta	Cu	Pb		Grain Size
636312	.040	1.68	.017	.011	.72	9.88	18.00	.32	.44		.24			6+ ✓
CHECK	.046 ✓	1.71 ✓	.017 ✓	.010 ✓	.71 ✓	9.89 ✓	17.99 ✓	.36	.44 ✓		.24 ✓			
SWGO														
MELTER: ARMCO										5/9 1226				

C. HARDENABILITY:

J5 = _____ J8 = _____ J32 = _____

J5 = _____ J8 = _____ J32 = _____

D. MAGNETIC PARTICLE INSPECTION:

F/S Rating = _____

F/S Rating = _____

FOR HEAT NO:

E. MECHANICAL PROPERTIES:

ULTIMATE STRENGTH (PSI)	YIELD POINT (PSI)	% ELONG	ROCKWELL HARDNESS	
90,260 ✓	51,720 ✓	55 ✓		
89,520	52,225	58		
90,360	46,875	56		

TUBESALES
THESE TEST REPORTS APPLY
TO Paul Mueller Co.
P.O. NO. 2557 Pt 1
SHIPPERS NO. S-17880
FOOTAGE 1415"
DATE 5-5-78

F. ADDITIONAL REQUIREMENTS:

PHYSICAL			
Macro Etch		Surface Condition	
Micro Finish			
MANIPULATING			
Bend Test		Flatten Test	
Crush Test		Reverse Bend	
Flange Test		Reverse Flatten	
Flare Test	X ✓		
CHEM.-MET.			
Boiling HNO_3		Embrittlement	X ✓
Decarb.-Micro	X	Passivation Test	
NON-DESTRUCTIVE			
Eddy Current		Hydrostatic	X ✓

This is to certify that the above test results are correct to the best of my knowledge and belief. vp

PACIFIC TUBE COMPANY

Ralph H. Krauss

CHel7-0556

PACIFIC TUBE COMPANY

5710 Smithway Street
Los Angeles, California 90040

CERTIFICATE OF TESTS

Customer: TUBESALES

Date: December 27, 1973

Specification: MILT 8808A AMEND 1 AMS 5576D & AMS5557B

PATCO Work Order No. 76143

Customer Order No. 3A-46211

Check Sheet No. 17456, 19974

Quantity 2,454'7"

Item No. 2

Size: 1.000" O.D. x .065" WALL

Analysis 321 WELDED & DRAWN TUBIN

The following mandatory or capability tests are certified as complying with specification requirements:

A. CHEMICAL ANALYSIS: Ladle [X] and/or Check [X]

B. GRAIN SIZE: (See Below)

HEAT NO.	C	Mn	P	S	Si	Ni	Cr	Mo	Ti	Cb & Ta	Cu	Pb		Grain Size
636312	.040	1.68	.017	.011	.72	9.88	18.00	.32	.44		.24			6+ ✓
CHECK	.046 ✓	1.71 ✓	.017 ✓	.010 ✓	.71 ✓	9.89 ✓	17.99 ✓	.36	.44 ✓		.24 ✓			
SWIC														
M ER: ARMCO														

C. HARDENABILITY:

J5= _____ J8= _____ J32= _____

J5= _____ J8= _____ J32= _____

D. MAGNETIC PARTICLE INSPECTION:

F/S Rating = _____ FOR HEAT NO: _____

F/S Rating = _____

E. MECHANICAL PROPERTIES:

ULTIMATE STRENGTH (PSI)	YIELD POINT (PSI)	% ELONG	ROCKWELL HARDNESS	
90,260 ✓	51,720 ✓	55 ✓		
89,520	52,225	58		
90,360	46,875	56		

TUBESALES
THESE TEST REPORTS APPLY
TO Paul Mueller Co.
P. O. NO. 2557 Linkage
SHIPPERS NO. 8-184155
FOOTAGE 0'7"
DATE 05/12/78

F. ADDITIONAL REQUIREMENTS:

PHYSICAL			
Macro Etch		Surface Condition	
Micro Finish			
MANIPULATING			
Bend Test		Flatten Test	
Crush Test		Reverse Bend	
Flange Test		Reverse Flatten	
Flare Test	X ✓		
CHEM.-MET.			
Boiling HNO_3		Embrittlement	X ✓
Decarb.-Micro	X	Passivation Test	
NON-DESTRUCTIVE			
Eddy Current		Hydrostatic	X ✓

5/10 2/16 1/12

hi to certify that the above test results are correct to the best of my knowledge and belief. vp

PACIFIC TUBE COMPANY

By Ralph H. Knauer

A. JOHNSON & CO. INC.

ANALYSIS AND QUALITY CONFORMANCE CERTIFICATE

LBID 208
M5521 Page 58

SOLD TO	Paul Mueller & Co. 1600 West Phelps Springfield, MO 65801
SHIP TO	SAME

Your Order No. marked for 2383
Our Order No. 4284 CS
Certificate date 4/24/78

Your Order No. marked for

MATERIAL DESCRIPTION

Item	Weight Lbs.	Classification	Size and Form	Heat No.	Lot No.
1	26.6	316 ELC	.035" x 25 # Spl.	E 8163	
2					
3					

FERRITE was calculated by (1) Schaeffler Diagram ☐ (2) Magna Gage ☐ (3) Other

CHEMICAL ANALYSIS is (1) Actual Weld Metal ☐ (2) Typical Weld Metal ☐ (3) Check Analysis ☒

Item	C	SI	MN	P	S	CR	NI	MO	Cb	TA	CU				Ferrite
1	.018	.34	1.89	.022	.010	18.85	12.09	2.31			.04				
2															
3															
4															

MECHANICAL PROPERTIES are (1) Actual Weld Metal ☐ (2) Typical Weld Metal ☐ (3) Mill Analysis ☐

Item	Tensile P.S.I.	Yield P.S.I.	% EL	% R.A.	Hardness	SPECIFICATIONS
1						
2						
3						
4						

Sworn and Subscribed before me this ..... day of

....., 19 .....

NOTARY PUBLIC

We hereby certify that the above material has been tested in accordance with the listed specifications and conforms to all applicable requirements.

AUTHORIZED SIGNATURE

PACIFIC TUBE COMPANY

5710 Smithway Street
Los Angeles, California 90040

LBID 208
M5521 Page 59

2/8
1226

CERTIFICATE OF TESTS

stomer TUBESALES

Date OCTOBER 27, 1977

:cification MILT-8808A AMEND. 1 MILT-8606C

PATCO Work Order No. 81363

AMEND. 1 AMS 5570J AND AMS 5557D

Customer Order No. 7C-71811

eck Sheet No. 095542

Quantity 522'-10"

Item No. 1

:e 1.500" O.D. X .065" WALL

Analysis 321 SEAMLESS TUBING

e following mandatory or capability tests are certified as complying with specification requirements:

CHEMICAL ANALYSIS: Ladle [x] and/or Check [x]

B. GRAIN SIZE: (See Below)

HEAT NO.	C	Mn	P	S	Si	Ni	Cr	Mo	Ti	Cb & Ta	Cu	Pb		Grain Size
1588	.05	1.58	.028	.011	.63	10.47	17.82	.25	.38		.07			7
HECK	.05	1.61	.026	.013	.61	10.28	17.47	.24	.39		.11			

HARDENABILITY:

J5= J8= J32=

J5= J8= J32=

D. MAGNETIC PARTICLE INSPECTION:

F/S Rating =

F/S Rating =

FOR HEAT NO:

MECHANICAL PROPERTIES:

ULTIMATE STRENGTH (PSI)	YIELD POINT (PSI)	% ELONG	ROCKWELL HARDNESS	
7,395	39,495	60		
5,375	36,975	62		
7,055	38,655	60		

F. ADDITIONAL REQUIREMENTS:

PHYSICAL			
Macro Etch		Surface Condition	ok
Micro Finish	ok		
MANIPULATING			
Bend Test		Flatten Test	ok
Crush Test		Reverse Bend	
Flange Test	ok	Reverse Flatten	
Flare Test	ok		
CHEM.-MET.			
Boiling HNO_3		Embrittlement	ok
Decarb.-Micro	ok	Passivation Test	ok
NON-DESTRUCTIVE			
Eddy Current		Hydrostatic	ok

APPROVED 11/7

is is to certify that the above test results are correct to the best of my knowledge and belief.

ceg

SUGN
w/ T-1226

PACIFIC TUBE COMPANY

RECEIVED FEB 0 1978

By

XP0088 (0-216-1) 2/75

PACIFIC TUBE COMPANY

5710 Smithway Street
Los Angeles, California 90040

LBID 208
M5521 Page 60

CERTIFICATE OF TESTS

:tomer TUBESALES

Date OCTOBER 11, 1977

cification MILT-8808A, AMEND. 1 MILT-8606C

PATCO Work Order No. 81278

AMEND. 1 TYPE 1 AMS 5570J AND AMS 5557D

Customer Order No. 7C-71258

ck Sheet No. 099843

Quantity 408'-07"

Item No. 1

1.000" O.D. X .065" WALL

Analysis 321 SEAMLESS TUBING

following mandatory or capability tests are certified as complying with specification requirements:

:HEMICAL ANALYSIS: Ladle [X] and/or Check [X]

B. GRAIN SIZE: (See Below)

EAT NO.	C	Mn	P	S	Si	Ni	Cr	Mo	Ti	Cb & Ta	Cu	Pb		Grain Size
51678	.04	1.73	.022	.006	.67	10.53	17.86	.14	.46		.05			7
:HECK	.04	1.76	.023	.008	.69	10.35	17.42	.15	.49		.06			

ARDENABILITY:

=_____ J8=_____ J32=_____

=_____ J8=_____ J32=_____

D. MAGNETIC PARTICLE INSPECTION:

F/S Rating = _____

F/S Rating = _____

FOR HEAT NO:

_____

_____

ECHANICAL PROPERTIES:

ULTIMATE RENGTH (PSI)	YIELD POINT (PSI)	% ELONG	ROCKWELL HARDNESS	
6,170	40,425	60		
8,510	41,485	58		
3,400	38,295	64		

APPROVED 11/7 TB

F. ADDITIONAL REQUIREMENTS:

PHYSICAL			
Macro Etch		Surface Condition	ok
Micro Finish	ok		
MANIPULATING			
Bend Test		Flatten Test	ok
Crush Test		Reverse Bend	
Flange Test	ok	Reverse Flatten	
Flare Test	ok		
CHEM.-MET.			
Boiling HNO_3		Embrittlement	ok
Decarb.-Micro	ok	Passivation Test	ok
NON-DESTRUCTIVE			
Eddy Current		Hydrostatic	ok

is to certify that the above test results are correct to the best of my knowledge and belief.

ceg

UCM
no # T-1226

RECEIVED FEB 03 197

PACIFIC TUBE COMPANY

By

XP0088 (C-216-1) 2/75

PACIFIC TUBE COMPANY

5710 Smithway Street
Los Angeles, California 90040

LBID 208 CHECKED
M5521 Page 61

CERTIFICATE OF TESTS

Customer: TUBESALES

Date: JULY 1, 1976

Specification: MIL-T-8808A, AMEND. 1 AND MIL-T-8606C, AMEND. 1 AND AMS 5557 C AND AMS 5570 H.

PATCO Work Order No. 5446

Customer Order No. 6-1671

Check Sheet No. 85822, 85825

Quantity 606'-03"

Item No. 1

Size 1.500" O.D. X .065" WALL

Analysis 321 SEAMLESS TUBING

The following mandatory or capability tests are certified as complying with specification requirements:

A. CHEMICAL ANALYSIS: Ladle [x] and/or Check [x]

B. GRAIN SIZE: (See Below)

HEAT NO.	C	Mn	P	S	Si	Ni	Cr	Mo	Ti	Cb & Ta	Cu	Pb		Grain Size
M8798	.058	1.68	.019	.005	.62	11.48	17.74	.15	.52		.10			6
CHECK	.056	1.68	.022	.008	.62	11.48	17.70	.14	.52		.10			

HARDENABILITY:

J5= J8= J32=

J5= J8= J32=

D. MAGNETIC PARTICLE INSPECTION: FOR HEAT NO:

F/S Rating =

F/S Rating =

E. MECHANICAL PROPERTIES:

ULTIMATE STRENGTH (PSI)	YIELD POINT (PSI)	% ELONG	ROCKWELL HARDNESS	
84,495	44,400	57		
85,155	44,730	58		
86,145	44,730	62		

SVP I 1-1226

2/15 1 1226

F. ADDITIONAL REQUIREMENTS:

PHYSICAL			
Macro Etch		Surface Condition	ok
Micro Finish			
MANIPULATING			
Bend Test		Flatten Test	ok
Crush Test		Reverse Bend	
Flange Test	ok	Reverse Flatten	
Flare Test	ok		
CHEM.-MET.			
Boiling HNO_3		Embrittlement	ok
Decarb.-Micro	ok	Passivation Test	ok
NON-DESTRUCTIVE			
Eddy Current		Hydrostatic	ok

This is to certify that the above test results are correct to the best of my knowledge and belief.

ceg

PACIFIC TUBE COMPANY

By H. R. Shupstine

RECEIVED FEB 14 1978

XP0069 (Q-216-1) 2/75

ALLEN-FRY STEEL COMPANY

No. 047788

5524 ALCOA AVENUE — LOS ANGELES, CALIFORNIA 90058
TELEPHONE 582-0611

LBID 208
M5521 Page 62
DUNS 00-796-4869

CERTIFIED TEST REPORT

PAUL MUELLER COMPANY
1600 WEST PHELPS
SPRINGFILED, MISSOURI 65801

SHIP TO

1/20
1/22

SHIP TO SAME AS SOLD TO UNLESS OTHERWISE NOTED

BER	CUSTOMER'S ORDER NUMBER	ORDER DATE	ENTERED BY	PARTIAL SHIPMENT / STOCK ORDER	REPORT	ATTN. / NUMBER REQUIRED
	PO#11688	1-10-78	~~XXXXXX~~ GAYLE A	☐ / ☐		HG ☐

DATE SHIPPED | P.PD. | COL. | NO. INVOICES | TAXABLE | BAL. ON.

MILL SOURCE	COLOR	SIZE & DESCRIPTION
Crucible	Pink & Blue	CF 316-L Ann Cond A OOS 763D AMS 5653A ASTM A-276-75 3/4" Sq. ASME SA-479 ASTM A-479-75

CHEMICAL ANALYSIS

HEAT NO.	C	MN	P	SU	SI	CR	NI	MO	VA	AL	SE	TI	CU	CB	COB
X90614	.015	1.63	.035	.027	.33	17.35	12.28	2.10					.25		

SVLM

PHYSICAL PROPERTIES

	YIELD LBS/SQ. IN	TENSILE STRENGTH LBS/SQ. IN.	ELONG % IN IN.	RED OF AREA %	BRINELL	ROCKWELL	EHN GRAIN SIZE	DECARB	MACRO	MICRO	EMBR	HARDENABILITY
	84,500	99,800	43.0	71.0	217				OK	OK	OK	

SUBSCRIBED AND SWORN TO BEFORE ME

OFFICIAL SEAL

THIS 16th DAY OF December 19 76 mc

NOTARY PUBLIC
IN AND FOR THE COUNTY OF LOS ANGELES STATE OF CALIFORNIA

INTERGRANULAR CORROSION TESTS OK

THE ALLEN-FRY STEEL CO. CERTIFIES THAT THIS IS A TRUE COPY OF THE ORIGINAL MILL TEST REPORT NOW ON FILE AND THAT THE SPECIALTY METAL COVERED BY THIS TEST REPORT WAS MELTED IN A STEEL MANUFACTURING FACILITY LOCATED IN THE UNITED STATES OR ITS POSSESSIONS.

BY Donald K. Mackey
AUTHORIZED CERTIFICATION CLERK

FORM TR-1

Washington Steel Corporation

WASHINGTON, PENNSYLVANIA 15301

CERTIFICATE OF ANALYSIS

DATE [illegible]

TO: [illegible] Corp.

CUSTOMER'S P. O. NO. [illegible]

MILL ORDER NO. [illegible]

[illegible] Pace Blvd.

INVOICE NO.

St. Louis, Mo. [illegible]

TYPE [illegible]

FINISH [illegible]

ITEM NO.	HEAT NO.	SIZE
1	Ht [illegible]	Dl. 19331 .050 . 48 x Coil 1 pcs. [illegible]

CHEMICAL ANALYSIS

HEAT NO	C	Mn.	P.	S.	Si.	Cr	Ni.	Cu.	Ti.	Cb.	Mo.
26057 SVKU	.039	1.73	.020	.017	.46	17.44	13.13	.01			3.26

1/2 1/2 Stock

PHYSICAL PROPERTIES

TEST NO.	YIELD	ULTIMATE	% ELONG. IN 2 IN.	ROCKWELL HARDNESS	OLSEN CUP TEST	BENDS	[illegible]
[illegible]	36.000	75.400	52.0	45B 44.5		0X	0[illegible]

[illegible] BY:
[illegible] GOODS DIVISION
ALCA[illegible] CORPORATION

[illegible] 11487

[illegible] 017131

[illegible] 7[illegible] 0[illegible]

18 [illegible] 2[illegible]

I hereby certify that the above figures are correct as contained in the records of the Corporation.

METALLURGICAL DEPARTMENT

PAUL MUELLER COMPANY

P.O. BOX 828 / SPRINGFIELD, MISSOURI U.S.A. 65801
TELEPHONE (417) 865-2831/CABLE MUELLER/TELEX 43-6427

Date: July 7, 1978

Lawrence Livermore Laboratory
University of California
Livermore, California 94550

Attention: Mr. Larry Valby

Subject: Your Order No.: 3502202 Our Order No.: T-1226

Gentlemen:

We are pleased to enclose the following reports pertaining to the above order:

- [ ] ASME Manufacturer's Data Report
- [ ] ASME Manufacturer's Partial Data Report
- [ ] Certificate of Compliance
- [ ] Certified Copies Mill Test Report
- [X] Other: Vessel Test Report - Panels 7 - 10
  Panels 17-20

Thank you very much for your order.

Very truly yours,

PAUL MUELLER COMPANY

David C. Harvey
Sales Manager
Mueller Temp-Plate

Enclosure(s)

DCH:jc

● FARM MILK COOLERS
● FOOD, BEVERAGE, CHEMICAL & PHARMACEUTICAL PROCESSING EQUIPMENT
● TANK HEADS & HEAT TRANSFER SURFACE
● STEEL PRODUCTS FOR THE CONSTRUCTION INDUSTRY

Stainless Steel

REF: NO. S.O.P. 61-3 (1/76) O-322

PRESIDENTIAL "E" AWARD FOR AN OUTSTANDING CONTRIBUTION TO THE EXPORT EXPANSION PROGRAM OF THE U.S.A.

ROUTING			
	Name	Initial	Date
1			
2			
3			

PAUL MUELLER COMPANY
P.O. BOX 828 / SPRINGFIELD, MISSOURI, U.S.A. 65801

VESSEL TEST REPORT

Work Order No. T 1226 Customer Lawrence Livermore Labs

Item Tested Liquid Helium Panel #7

Type of Test:

Penetrant:

Flourescent ☐

Color-Contrast ☐

* Hydrostatic ☐

* Pneumatic ☐

* Immersion ☐

* Halogen ☐

* Other Mass Spec ☒

* Test Pressure _____ psig

Gauge Calibrated _____ (Date) _____ (By)

Remarks:

Scale 3×10^{-9}, out gas at start of helium blanket 5.8. Out gas at end of test 5.2. Hi-vac pressure 10^{-6}

Statement of Test

The above item was subjected to the above test and accepted.

Douglas W Moyer
Signature of Observer

6-20-78
Date of Test

NOTE: This form is completed by the person performing the above test and routed to Quality Assurance Department.

(11/76) O-545

ROUTING			
	Name	Initial	Date
1			
2			
3			

PAUL MUELLER COMPANY
P. O. BOX 828 / SPRINGFIELD, MISSOURI, U.S.A. 65801

VESSEL TEST REPORT

Work Order No. T 1226-8 Customer Lawrence Lab.

Item Tested Liquid Helium Panel

Type of Test:

Penetrant:

Flourescent ☐

Color-Contrast ☐

* Hydrostatic ☐

* Pneumatic ☐

* Immersion ☐

* Halogen ☐

* Other Mass Spect ☒

* Test Pressure _____ psig

Gauge Calibrated _____ (Date) _____ (By)

Remarks:
Scale 3×10^{-9} Outgas 2.0 at start test
2.0 at end of test. Manifold Pressure
1.0 Mil torr Hipac 10^{-6}

Statement of Test

The above item was subjected to the above test and accepted.

P. Gass
Signature of Observer

6-21-78
Date of Test

NOTE: This form is completed by the person performing the above test and routed to Quality Assurance Department.

(11/76) O-545

ROUTING			
	Name	Initial	Date
1			
2			
3			

PAUL MUELLER COMPANY
P.O. BOX 828 / SPRINGFIELD, MISSOURI, U.S.A. 65801

VESSEL TEST REPORT

Work Order No. T1276 #9 Customer Lawrence Lab

Item Tested Liquid Helium Panel

Type of Test:

Penetrant:

Flourescent ☐

Color-Contrast ☐

* Hydrostatic ☐

* Pneumatic ☐

* Immersion ☐

* Halogen ☐

* Other Mass Spect ☒

* Test Pressure _____ psig

Gauge Calibrated _____ (Date) _____ (By)

Remarks:

Scale 3×10^{-9} Autoas 1.9 start of test & 1.9 at end of test. Manifold Pressure 1 Millitorr Hi Vac 10^{-6}

Statement of Test

The above item was subjected to the above test and accepted.

Paul Gass
Signature of Observer

6-21-78
Date of Test

NOTE: This form is completed by the person performing the above test and routed to Quality Assurance Department.

(11/76) O-545

ROUTING			
	Name	Initial	Date
1			
2			
3			

PAUL MUELLER COMPANY
P.O. BOX 828 / SPRINGFIELD, MISSOURI, U.S.A. 65801

VESSEL TEST REPORT

Work Order No. T1226-10 Customer Lawrence Lab

Item Tested Liquid Helium Panel

Type of Test:

Penetrant:

Flourescent ☐

Color-Contrast ☐

* Hydrostatic ☐

* Pneumatic ☐

* Immersion ☐

* Halogen ☐

* Other Mass Spect ☒

* Test Pressure _____ psig

Gauge Calibrated _____ (Date) _____ (By)

Remarks:

Scale 3×10^{-9} Outgas 2.5 pt start of test & 2.5 at end of test. Manifold Pressure 1 millitor Helio 10^{-6}

Statement of Test

The above item was subjected to the above test and accepted.

R. Gass
Signature of Observer

6-22-78
Date of Test

NOTE: This form is completed by the person performing the above test and routed to Quality Assurance Department.

(11/76) O-545

ROUTING			
	Name	Initial	Date
1			
2			
3			

PAUL MUELLER COMPANY
P. O. BOX 828 / SPRINGFIELD, MISSOURI, U.S.A. 65801

VESSEL TEST REPORT

Work Order No. T1226 #17 Customer Lawrence Lab.

Item Tested liquid nitrogen Panel

Type of Test:

Penetrant:

Flourescent ☐

Color-Contrast ☐

* Hydrostatic ☐

* Pneumatic ☐

* Immersion ☐

* Halogen ☐

* Other Mass Spect ☒

* Test Pressure _____ psig

Gauge Calibrated _____ (Date) _____ (By)

Remarks:

Scale 3×10^{-9} Outgas 1.2 at start of test 1.2 at end of test. Manifold Pressure 1 Mil Torr High Vac 10^{-6}

Statement of Test

The above item was subjected to the above test and accepted.

P. Gass
Signature of Observer

6-20-78
Date of Test

NOTE: This form is completed by the person performing the above test and routed to Quality Assurance Department.

(11/76) O-545

ROUTING			
	Name	Initial	Date
1			
2			
3			

PAUL MUELLER COMPANY
P. O. BOX 828 / SPRINGFIELD, MISSOURI, U.S.A. 65801

VESSEL TEST REPORT

Work Order No. T 1226 Customer Lawrence Livermore Labs

Item Tested Liquid Nitrogen Panel # 18

Type of Test:

Penetrant:

Flourescent ☐

Color-Contrast ☐

* Hydrostatic ☐

* Pneumatic ☐

* Immersion ☐

* Halogen ☐

* Other Mass Spec ☒

* Test Pressure _____ psig

Gauge Calibrated _____ (Date) _____ (By)

Remarks:

Leak 3×10^{-9}, out gas at start of helium blanket 1.4. Out gas at end of test 1.3. Hi-vac pressure 10^{-5}

Statement of Test

The above item was subjected to the above test and accepted.

Douglas W Mayer
Signature of Observer

6-21-78
Date of Test

NOTE: This form is completed by the person performing the above test and routed to Quality Assurance Department.

(11/76) O-545

ROUTING			
	Name	Initial	Date
1			
2			
3			

PAUL MUELLER COMPANY
P.O. BOX 828 / SPRINGFIELD, MISSOURI, U.S.A. 65801

VESSEL TEST REPORT

Work Order No. T1226 Customer Lawrence Livermore Labs

Item Tested Liquid Nitrogen Panel #19

Type of Test:

Penetrant:

Flourescent ☐

Color-Contrast ☐

* Hydrostatic ☐

* Pneumatic ☐

* Immersion ☐

* Halogen ☐

* Other Mass Spec ☒

* Test Pressure _____ psig

Gauge Calibrated _____ (Date) _____ (By)

Remarks:

Scale 3X10^{-9}, out gas at start of helium blanket 2.0. Out gas at end of test 2.0. Hi-vac pressure 10^{-6}

Statement of Test

The above item was subjected to the above test and accepted.

Douglas W Mayson
Signature of Observer

6-22-78
Date of Test

NOTE: This form is completed by the person performing the above test and routed to Quality Assurance Department.

(11/76) O-545

ROUTING			
	Name	Initial	Date
1			
2			
3			

PAUL MUELLER COMPANY
P.O. BOX 828 / SPRINGFIELD, MISSOURI, U.S.A. 65801

VESSEL TEST REPORT

Work Order No. T 1226 Customer Lawrence Livermore Labs

Item Tested Liquid Nitrogen Panel #20

Type of Test:

Penetrant:

Flourescent ☐

Color-Contrast ☐

* Hydrostatic ☐

* Pneumatic ☐

* Immersion ☐

* Halogen ☐

* Other Mass Spec ☒

* Test Pressure _____ psig

Gauge Calibrated _____ (Date) _____ (By)

Remarks:

Scale 3×10^{-9}, out gas at start of helium blanket 1.4. Out gas at end of test 1.0. Hi-vac pressure 10^{-5}

Statement of Test

The above item was subjected to the above test and accepted.

Douglas W Mayer
Signature of Observer

6-22-78
Date of Test

NOTE: This form is completed by the person performing the above test and routed to Quality Assurance Department.

(11/76) O-545

ROUTING			
	Name	Initial	Date
1			
2			
3			

PAUL MUELLER COMPANY
P.O. BOX 828 / SPRINGFIELD, MISSOURI, U.S.A. 65801

VESSEL TEST REPORT

Work Order No. T 1226 Customer Lawrence Livermore Labs

Item Tested Liquid Helium Panel #1

Type of Test:

Penetrant:

Flourescent ☐

Color-Contrast ☐

* Hydrostatic ☐

* Pneumatic ☐

* Immersion ☐

* Halogen ☐

* Other Mass Spec ☒

* Test Pressure _____ psig

Gauge Calibrated _____ (Date) _____ (By)

Remarks:

Scale 3×10^{-9}, out gas at start of helium blanket 1.0. Out gas at end of test .8. Hi-vac pressure 10^{-5}

Statement of Test

The above item was subjected to the above test and accepted.

Douglas W Mayon
Signature of Observer

5-2-78
Date of Test

NOTE: This form is completed by the person performing the above test and routed to Quality Assurance Department.

(11/76) O-545

ROUTING			
	Name	Initial	Date
1			
2			
3			

PAUL MUELLER COMPANY
P.O. BOX 828 / SPRINGFIELD, MISSOURI, U.S.A. 65801

VESSEL TEST REPORT

Work Order No. T 1226 Customer Lawrence Livermore Labs

Item Tested Liquid Helium Panel #2

Type of Test:

Penetrant:

Flourescent ☐

Color-Contrast ☐

* Hydrostatic ☐

* Pneumatic ☐

* Immersion ☐

* Halogen ☐

* Other Mass Spec ☒

* Test Pressure _____ psig

Gauge Calibrated _____ (Date) _____ (By)

Remarks:

Scale 3×10^{-9}, out gas at start of helium blanket .6 . Out gas at end of test .6 . Hi-vac pressure 10^{-5}

Statement of Test

The above item was subjected to the above test and accepted.

Douglas W Mowan
Signature of Observer

5-3-78
Date of Test

NOTE: This form is completed by the person performing the above test and routed to Quality Assurance Department.

(11/76) O-545

ROUTING			
	Name	Initial	Date
1			
3			

PAUL MUELLER COMPANY
P.O. BOX 828 / SPRINGFIELD, MISSOURI, U.S.A. 65801

VESSEL TEST REPORT

Work Order No. T 1226 Customer Lawrence Livermore Labs

Item Tested Liquid Helium Panel #3

Type of Test:

Penetrant:

Flourescent ☐

Color-Contrast ☐

* Hydrostatic ☐

* Pneumatic ☐

* Immersion ☐

* Halogen ☐

* Other Mass Spec ☒

* Test Pressure _____ psig

Gauge Calibrated _____ (Date) _____ (By)

Remarks:

Scale 3×10^{-9}, out gas at start of helium blanket 1.6. Out gas at end of test 1.0. Hi-vac pressure 10^{-5}

Statement of Test

The above item was subjected to the above test and accepted.

Douglas W Mayner
Signature of Observer

6-2-78
Date of Test

NOTE: This form is completed by the person performing the above test and routed to Quality Assurance Department.

(11/76) O-545

ROUTING			
	Name	Initial	Date
1			
2			
3			

PAUL MUELLER COMPANY
P. O. BOX 828 / SPRINGFIELD, MISSOURI, U.S.A. 65801

VESSEL TEST REPORT

Work Order No. T 1226 Customer Lawrence Livermore Labs

Item Tested Liquid Helium Panel #4

Type of Test:

Penetrant:

Flourescent ☐

Color-Contrast ☐

* Hydrostatic ☐

* Pneumatic ☐

* Immersion ☐

* Halogen ☐

* Other Mass Spec ☒

* Test Pressure _____ psig

Gauge Calibrated _____ (Date) _____ (By)

Remarks:

Scale 3×10^{-9}; out gas at start of helium blanket 1.6. Out gas at end of test 1.6. Hi-vac pressure 10^{-6}

Statement of Test

The above item was subjected to the above test and accepted.

Douglas W Moyer
Signature of Observer

6-3-78
Date of Test

NOTE: This form is completed by the person performing the above test and routed to Quality Assurance Department.

(11/76) O-545

ROUTING			
	Name	Initial	Date
1			
3			

PAUL MUELLER COMPANY
P.O. BOX 828 / SPRINGFIELD, MISSOURI, U.S.A. 65801

VESSEL TEST REPORT

Work Order No. T 1226 Customer Lawrence Livermore Labs

Item Tested Liquid Helium Panel #5

Type of Test:

Penetrant:

Flourescent ☐

Color-Contrast ☐

* Hydrostatic ☐

* Pneumatic ☐

* Immersion ☐

* Halogen ☐

* Other Mass Spec ☒

* Test Pressure _____ psig

Gauge Calibrated _____ (Date) _____ (By)

Remarks:

Scale 3×10^{-9}, out gas at start of helium blanket 1.1 . Out gas at end of test 1.1 . Hi-vac pressure 10^{-5}

Statement of Test

The above item was subjected to the above test and accepted.

Douglas W Mayson
Signature of Observer

6-5-78
Date of Test

NOTE: This form is completed by the person performing the above test and routed to Quality Assurance Department.

(11/76) O-545

ROUTING			
	Name	Initial	Date
1			
2			
3			

PAUL MUELLER COMPANY
P. O. BOX 828 / SPRINGFIELD, MISSOURI, U.S.A. 65801

VESSEL TEST REPORT

Work Order No. T 1226 Customer Lawrence Livermore Labs

Item Tested Liquid Helium Panel #6

Type of Test:

Penetrant:

Flourescent ☐

Color-Contrast ☐

* Hydrostatic ☐

* Pneumatic ☐

* Immersion ☐

* Halogen ☐

* Other Mass Spec ☒

* Test Pressure _____ psig

Gauge Calibrated _____ (Date) _____ (By)

Remarks:

Scale 3×10^{-9}, out gas at start of helium blanket 1.2. Out gas at end of test 1.2. Hi-vac pressure 10^{-5}

Statement of Test

The above item was subjected to the above test and accepted.

Douglas W Moyer
Signature of Observer

6-5-78
Date of Test

NOTE: This form is completed by the person performing the above test and routed to Quality Assurance Department.

(11/76) O-545

ROUTING			
	Name	Initial	Date
1			
2			

PAUL MUELLER COMPANY
P.O. BOX 828 / SPRINGFIELD, MISSOURI, U.S.A. 65801

VESSEL TEST REPORT

Work Order No. T 1226 Customer Lawrence Livermore Labs

Item Tested Liquid Nitrogen Panel # 11

Type of Test:

Penetrant:

Flourescent ☐

Color-Contrast ☐

* Hydrostatic ☐

* Pneumatic ☐

* Immersion ☐

* Halogen ☐

* Other Mass Spec ☒

* Test Pressure _____ psig

Gauge Calibrated _____ (Date) _____ (By)

Remarks:

Scale 3×10^{-9}, out gas at start of helium blanket 1.6. Out gas at end of test 1.2. Hi-vac pressure 10^{-5}

Statement of Test

The above item was subjected to the above test and accepted.

Douglas W Moran
Signature of Observer

5-5-78
Date of Test

NOTE: This form is completed by the person performing the above test and routed to Quality Assurance Department.

(11/76) O-545

ROUTING			
	Name	Initial	Date
1			
2			
3			

PAUL MUELLER COMPANY
P.O. BOX 828 / SPRINGFIELD, MISSOURI, U.S.A. 65801

VESSEL TEST REPORT

Work Order No. T 1226 Customer Lawrence Livermore Labs

Item Tested Liquid Nitrogen Panel # 12

Type of Test:

Penetrant:

Flourescent ☐

Color-Contrast ☐

* Hydrostatic ☐

* Pneumatic ☐

* Immersion ☐

* Halogen ☐

* Other Mass Spec ☒

* Test Pressure _____ psig

Gauge Calibrated _____ (Date) _____ (By)

Remarks:

Scale 3×10^{-9}, out gas at start of helium blanket 1.4 . Out gas at end of test 1.0 . Hi-vac pressure 10^{-6}

Statement of Test

The above item was subjected to the above test and accepted.

Douglas W Mayer
Signature of Observer

5-9-78
Date of Test

NOTE: This form is completed by the person performing the above test and routed to Quality Assurance Department.

(11/76) O-545

ROUTING			
	Name	Initial	Date
1			
2			
3			

PAUL MUELLER COMPANY
P. O. BOX 828 / SPRINGFIELD, MISSOURI, U.S.A. 65801

VESSEL TEST REPORT

Work Order No. T 1226 Customer Lawrence Livermore Labs

Item Tested Liquid Nitrogen Panel # 13

Type of Test:

Penetrant:

Flourescent ☐

Color-Contrast ☐

* Hydrostatic ☐

* Pneumatic ☐

* Immersion ☐

* Halogen ☐

* Other Mass Spec ☒

* Test Pressure _____ psig

Gauge Calibrated _____ (Date) _____ (By)

Remarks:

Scale 3X10^{-9}, out gas at start of helium blanket .2 . Out gas at end of test .2 . Hi-vac pressure 10^{-5}

Statement of Test

The above item was subjected to the above test and accepted.

Douglas W Moyer
Signature of Observer

5-12-78
Date of Test

NOTE: This form is completed by the person performing the above test and routed to Quality Assurance Department.

(11/76) O-545

ROUTING			
	Name	Initial	Date
1			
2			
3			

PAUL MUELLER COMPANY
P. O. BOX 828 / SPRINGFIELD, MISSOURI, U.S.A. 65801

VESSEL TEST REPORT

Work Order No. T 1226 Customer Lawrence Livermore Labs

Item Tested Liquid Nitrogen Panel #14

Type of Test:

Penetrant:

Flourescent ☐

Color-Contrast ☐

* Hydrostatic ☐

* Pneumatic ☐

* Immersion ☐

* Halogen ☐

* Other Mass Spec ☒

* Test Pressure _____ psig

Gauge Calibrated _____ (Date) _____ (By)

Remarks:

Scale 3X10^{-9}, out gas at start of helium blanket 1.2. Out gas at end of test 1.2. Hi-vac pressure 10^{-5}

Statement of Test

The above item was subjected to the above test and accepted.

Douglas W Mazon
Signature of Observer

5-16-78
Date of Test

NOTE: This form is completed by the person performing the above test and routed to Quality Assurance Department.

(11/76) O-545

ROUTING			
	Name	Initial	Date
1			
2			
3			

PAUL MUELLER COMPANY
P.O. BOX 828 / SPRINGFIELD, MISSOURI, U.S.A. 65801

VESSEL TEST REPORT

Work Order No. T 1226 Customer Lawrence Livermore Labs

Item Tested Liquid Nitrogen Panel #15

Type of Test:

Penetrant:

Flourescent ☐

Color-Contrast ☐

* Hydrostatic ☐

* Pneumatic ☐

* Immersion ☐

* Halogen ☐

* Other Mass Spec ☒

* Test Pressure _____ psig

Gauge Calibrated _____ (Date) _____ (By)

Remarks:

Scale 3×10^{-9}, out gas at start of helium blanket 1.0. Out gas at end of test 1.0. Hi-vac pressure 10^{-5}

Statement of Test

The above item was subjected to the above test and accepted.

Douglas W Morgan
Signature of Observer

5-18-78
Date of Test

NOTE: This form is completed by the person performing the above test and routed to Quality Assurance Department.

(11/76) O-545

ROUTING			
	Name	Initial	Date
1			
2			
3			

PAUL MUELLER COMPANY
P. O. BOX 828 / SPRINGFIELD, MISSOURI, U.S.A. 65801

VESSEL TEST REPORT

Work Order No. T 1226 Customer Lawrence Livermore Labs

Item Tested Liquid Nitrogen Panel # 16

Type of Test:

Penetrant:

Flourescent ☐

Color-Contrast ☐

* Hydrostatic ☐

* Pneumatic ☐

* Immersion ☐

* Halogen ☐

* Other Mass Spec ☒

* Test Pressure _____ psig

Gauge Calibrated _____ (Date) _____ (By)

Remarks:

Scale 3×10^{-9}, out gas at start of helium blanket .4 . Out gas at end of test .3 . Hi-vac pressure 10^{-6}

Statement of Test

The above item was subjected to the above test and accepted.

Douglas W Morgan
Signature of Observer

5-26-78
Date of Test

NOTE: This form is completed by the person performing the above test and routed to Quality Assurance Department.

(11/76) O-545

ROUTING			
	Name	Initial	Date
1			
2			
3			

PAUL MUELLER COMPANY
P. O. BOX 828 / SPRINGFIELD, MISSOURI, U.S.A. 65801

VESSEL TEST REPORT

Work Order No. T-1226 Customer Lawrence Livermore Labs.

Item Tested LH2 18/18 316L PANEL ASSYS

PANELS # 1 & 2

Type of Test:

Penetrant:

Flourescent ☐

Color-Contrast ☐

* Hydrostatic ☐

* Pneumatic ☐

* Immersion ☐

* Halogen ☒

* Other _____ ☐ Nitrogen & Freon

* Test Pressure 300 psig

Gauge Calibrated _____ (Date) _____ (By)

Remarks:

Statement of Test

The above item was subjected to the above test and accepted.

monty west
Signature of Observer

4-28-78
Date of Test

NOTE: This form is completed by the person performing the above test and routed to Quality Assurance Department.

(11/76) O-545

ROUTING			
	Name	Initial	Date
1			
2			
3			

PAUL MUELLER COMPANY
P. O. BOX 828 / SPRINGFIELD, MISSOURI, U.S.A. 65801

VESSEL TEST REPORT

Work Order No. T1226 Customer Lawrence Livermore Labs

Item Tested Templates -3 Thru 8

Type of Test:

Penetrant:

Flourescent ☐

Color-Contrast ☐

* Hydrostatic ☐

* Pneumatic ☐

* Immersion ☐

* Halogen ☑

* Other _____ ☐

* Test Pressure 300 psig

Gauge Calibrated _____ (Date) _____ (By)

Remarks:

Test ok

Statement of Test

The above item was subjected to the above test and accepted.

R Glenn
Signature of Observer

29-30-31 May 78
Date of Test

NOTE: This form is completed by the person performing the above test and routed to Quality Assurance Department.

(11/76) O-545

ROUTING			
	Name	Initial	Date
1			
2			
3			

PAUL MUELLER COMPANY
P. O. BOX 828 / SPRINGFIELD, MISSOURI, U.S.A. 65801

VESSEL TEST REPORT

Work Order No. T-1226-9410 Customer Lawrence Livermore Labs

Item Tested Template

Type of Test:

Penetrant:

Flourescent ☐

Color-Contrast ☐

* Hydrostatic ☐

* Pneumatic ☐

* Immersion ☐

* Halogen ☒

* Other _____ ☐ Freon & nitrogen Mixture

* Test Pressure 300 psig

Gauge Calibrated _____ (Date) _____ (By)

Remarks:

O.K.

Statement of Test

The above item was subjected to the above test and accepted.

Monty West
Signature of Observer

5-24-78
Date of Test

NOTE: This form is completed by the person performing the above test and routed to Quality Assurance Department.

(11/76) O-545

ROUTING			
	Name	Initial	Date
1			
2			
3			

PAUL MUELLER COMPANY
P.O. BOX 828 / SPRINGFIELD, MISSOURI, U.S.A. 65801

VESSEL TEST REPORT

Work Order No. T-1226 #11&12 Customer Lawrence Livermore Labs

Item Tested LNZ 18/18 316L Panel Assy

Type of Test:

Penetrant:

Flourescent ☐

Color-Contrast ☐

* Hydrostatic ☐

* Pneumatic ☐

* Immersion ☐

* Halogen ☒

* Other _____ ☐ Nitrogen + Freon Mixture

* Test Pressure 300 psig

Gauge Calibrated _____ (Date) _____ (By)

Remarks:

Statement of Test

The above item was subjected to the above test and accepted.

monty west
Signature of Observer

5-1-78
Date of Test

NOTE: This form is completed by the person performing the above test and routed to Quality Assurance Department.

(11/76) O-545

ROUTING			
	Name	Initial	Date
1			
2			
3			

PAUL MUELLER COMPANY
P. O. BOX 828 / SPRINGFIELD, MISSOURI, U.S.A. 65801

VESSEL TEST REPORT

Work Order No. T1226 Customer LAWRANCE LIVERMORE LABS.

Item Tested TEMPLATES 13 THRU 20

Type of Test:

Penetrant:

- Flourescent ☐
- Color-Contrast ☐
- * Hydrostatic ☐
- * Pneumatic ☐
- * Immersion ☐
- * Halogen ☑
- * Other _____ ☐

* Test Pressure 300 psig

Gauge Calibrated _____ (Date) _____ (By)

Remarks:

TEST OK

Statement of Test

The above item was subjected to the above test and accepted.

Allen Isomb
Signature of Observer

1-2-6-78
Date of Test

NOTE: This form is completed by the person performing the above test and routed to Quality Assurance Department.

(11/76) O-545

ROUTING			
	Name	Initial	Date
1	C. White	[illegible]	5/9/78
2	Job File		
3			

PAUL MUELLER COMPANY
P. O. BOX 828 / SPRINGFIELD, MISSOURI, U.S.A. 65801

VESSEL TEST REPORT

Work Order No. T-1226 Customer Lawrence Livermore

~~Item Tested~~ Temp-Plts were inflated to 475 psi. using nitrogen. 20 panels

Type of Test:

Penetrant:

- Flourescent ☐
- Color-Contrast ☐
- * Hydrostatic ☐
- * Pneumatic ☒
- * Immersion ☐
- * Halogen ☐
- * Other _____ ☐

* Test Pressure _____ psig

Gauge Calibrated 3-30-78 (Date) Jim Yen (By)

Remarks:

Gauge was hooked up in line to assure proper inflation pressure

Statement of Test

The above item was subjected to the above test and accepted.

Walter Powell
Signature of Observer

5-4-78
Date of Test

NOTE: This form is completed by the person performing the above test and routed to Quality Assurance Department.

(11/76) O-545

ROUTING			
	Name	Initial	Date
1	D. Meagan	DM	6/5
2			
3			

PAUL MUELLER COMPANY
P.O. BOX 828 / SPRINGFIELD, MISSOURI, U.S.A. 65801

VESSEL TEST REPORT

Work Order No. T-1226-1thru 20 Customer LAWRENCE LIVERMORE LAB.

Item Tested _____

Type of Test:

Penetrant:

- Flourescent ☐
- Color-Contrast ☐
- * Hydrostatic ☐
- * Pneumatic ☑
- * Immersion ☑
- * Halogen ☐
- * Other _____ ☐

* Test Pressure 400 psig

Gauge Calibrated _____ (Date) _____ (By)

Remarks:

nitrogen

Statement of Test

The above item was subjected to the above test and accepted.

Ronald D Miles
Signature of Observer

6-2-78
Date of Test

NOTE: This form is completed by the person performing the above test and routed to Quality Assurance Department.

(11/76) O-545

SAFETY SYSTEMS, INC.

DATE: July 3, 1978

CUSTOMER: UNIVERSITY OF CALIFORNIA

SUBJECT: Your Purchase Order Number:
BS&B S.O. Number 800850
BS&B Lot No: 800850-1

BURST TEST CERTIFICATE

Gentlemen:

This is to certify that inspection and burst tests have been accomplished on the rupture disk(s) as listed below and results are as follows:

TYPE: JRS 77-37-0009-35 SIZE: 2" MATERIAL: Body = 316SST Disk = Nickel

NO. OF PIECES MANUFACTURED:..... 23

NO. OF PIECES ORDERED AND SHIPPED:.... 17

BURST TEST RESULTS: ..... 76#, 75.5#, 84.5#; 80#, 72#, 85.5# @ -320 Deg. F.

RUPTURE PRESSURE: ..... 75# @ -320 Deg. F.

DATE OF TEST:..... 6/29/78

BS&B SAFETY SYSTEMS, INC.

A. T. Purinton
Quality Control Manager

NTFD # 3157

CRYOSYSTEM TRANSPORT PROCEDURES

The following checks lists are provided for crane transport operations of the cryosystem in Bldg. 6.

General Precautions:

1. Use inching mode on crane raise or lower.

2. Make all traverses in as smooth a manner as possible. Do not exceed 1/4g side loads (corresponds to $\simeq$ 4 feet swinging motion at bottom). The operations have been done before with $\approx$ 6" swinging and this should be the goal. Do not jog the traverse drive motors.

3. Watch clearances during all crane motions.

I. MOVING CRYOSYSTEM FROM STAND TO VESSEL

1. Remove all unnecessary equipment from lid and stand. Remove concrete shielding and framework. Have required tools at vessel. Have vessel interior and O-ring seal prepared.

2. Cross braces and horizontal braces must be installed (tops of cross braces to be fastened snug only).

3. Last ditch supports must be adjusted snug only.

[4. Take strain gauge readings.]

5. Double tree must be installed properly.

6. Entire array and roof must swing as a unit.

7. Lift slightly and confirm or adjust balance.

8. Remove slowly, watching corner clearances. It is necessary to manually hold the rotation alignment since the cable twist causes slight clockwise rotation.

9. When clear of stand, lift to full height, rotate clockwise and tie off single tree to crane cab.

10. Move inboard 6 feet.

11. Traverse in one motion (no jogging) to vessel.

12. Untie tree from cab, move inboard to center. Watch clearance of 4R corner of lid to 6" pipes, and fittings at 3L to cab floor.

13. Lower assembly until its bottom is near the top of the tank.

14. Remove bottom horizontal braces. Remove cross braces from bottom and C-clamp up 4 feet on inboard module edge. Install side sway supports on bottom lips of modules (4 places). Install first section of baffling at source end.

15. Lower into vessel. Check engagement of source end baffles and alignment of assembly in vessel. Watch clearances of baffles to magnet stand. It is necessary to manually hold the rotation alignment as the cable unreels.

16. Reset cross braces, install next source end baffles and continue lowering. Remove cross braces when there is approximately 5 feet left to go.

17. Be sure that lid and vessel O-ring surfaces are clean.

18. Watch engagement of side sway supports into floor mounts. The balance of the assembly critically affects this.

19. Complete lowering assembly into vessel; watch the diaphragm at the magnet stand to see that it clears and watch that the end baffles do not catch on the anti-sway brackets on the floor.

20. Disconnect double tree.

[21. Read strain gauges. Maximum reading should be 2500 lb. (≈2.9 lbs./μstrain).]

II. MOVING CRYOSYSTEM FROM VESSEL TO STAND

1. Remove calorimeter, ion dump, magnetic shielding, magnet, helium dewar and LN_2 manifold from vessel lid. Remove concrete shielding framework. Clear out equipment inside stand. Check that oilon inserts are installed on jactuator tops.

2. Connect double tree. Check that 770 lbs. of lead are on the source end of the lid. Install center cross brace. Align cab using plumbbob.

3. Raise assembly out of vessel 5 feet. Watch interior clearances at baffles, particularly at magnet stand and source end.

4. Remove upper sections of source end baffles. Install cross braces at top with bolts snug only. Check that last ditch supports are finger tight. C-clamp cross braces to inside lips of modules.

5. Pull out another 5 feet. Remove middle section of source end baffles. Reset cross braces and C-clamp.

6. Pull out remainder. Remove lower section of source end baffles. Remove bottom side sway supports. Install horizontal braces and cross braces to bottom lip of modules.

7. Check that assembly swings as a unit.

8. Lift assembly to full height. Watch clearance at 4R corner to 6" pipes, and at 3L fittings to bottom of cab.

9. Move outboard approximately 3 feet (one motion).

10. Rotate assembly clockwise and tie off single tree to crane cab. Move outboard until both corners of assembly will clear through concrete shielding framework. A combination of outboard and traverse may be necessary to get through; always allow the assembly to stop swinging after each individual move.

11. Traverse to stand (one motion). Untie the single tree from the cab and rotate into position.

12. Start lowering into stand. Adjust alignment as required. Always allow the assembly to stop swinging after each individual move.

13. Set lid down on top of oilon inserts. Remove double tree. Leave all cross braces installed.

LV/da
1187z

INDIVIDUAL MODULE TESTING

This procedure provides information for the testing of individual cryopump modules. Additional information is provided on the following job orders, including drawings referenced thereon.

J.O. #623637
J.O. #624890
J.O. #625274
J.O. #626179
J.O. #627723
J.O. #628099

A plumbing schematic is on drawing AAA78-116511.

INDIVIDUAL MODULE TESTING

(1) Remove assembled module from crate (horizontal position, using fixtures provided) ($\approx$ 1500 lb).

(2) Attach fixture to top end of module. Raise to upright position. A pad to distribute the load at the bottom lip should be used.

(3) Place module in position inside stand. Attach braces to module. Remove hoist from module. Remove shipping block from upper LN_2 coupling.

(4) Lower lid down onto stand, taking care to align fittings penetrating lid. Attach turnbuckle assemblies to module top. Lift up assembly and check alignment, adjust turnbuckles A/R. Remove footing fixture and replace assembly on stand.

(5) Weld burst disc penetrator (if applicable). Weld helium inlet and outlet lines. Attach instrumentation cables to connectors. Leak check helium plumbing. Superinsulate He lines.

(6) Detach braces from module. Raise entire assembly up and lower into test tank.

(7) Mount helium dewar and LN_2 dewar in place. Connect instrumentation.

(8) Start pumpdown. Purge helium and nitrogen systems. Continue pumping until pressure $\leq 10^{-5}$ torr.

(9) Provide positive pressure on helium system. Start LN_2 chill at a rate of 100 liters/hour. Temperatures should be recorded.

(10) When LN_2 system is stabilized, tests to confirm proper operation should be performed. These tests include:

leak rate $< 10^{-9}$ atm cc/sec
temperatures $< 100K$
steady circulation
LN_2 consumption

(11) Start helium transfer after leak detector/RGA show no residual helium. Transfer at a rate of 100 liters/hour. Continue until panel full and cold; go into circulation mode on helium circuit. Perform leak check. Fill helium dewar and measure system loss rate. Confirm instrumentation performance.

(12) At completion of test, return excess helium to refrigerator. Break 400μ exchange gas and allow to warmup until N_2 system dry. Break vacuum with 10"Hg dry N_2. Allow overnight warmup.

(13) Check temperatures. If above 10°C, break vacuum. Remove equipment from top of lid. Raise assembly out of tank and reinstall on assembly stand, with footing in place.

(14) Attach braces to module. Disconnect LHe plumbing. Detach turnbuckles. Remove lid from stand.

(15) Install shipping block in upper LN_2 coupling. Attach lifting fixture to top of module. Place pad at bottom corner of module. Lower module onto its side. Replace module in crate, using fixture provided.

I. SYSTEM REQUIREMENTS

II. DIFFERENTIAL PUMPING
- A. CHAMBER SPEEDS & PRESSURES; INJECTED GAS & LINE DENSITY

III. CRYOPUMPS
- A. STRESS ANALYSIS
- B. LN_2 CIRCULATION
- C. LHe CIRCULATION
- D. LHe & LN_2 CONSUMPTION

IV HELIUM TANK & LN_2 MANIFOLD
- A. HELIUM TANK (STRUCTURAL & THERMAL)
- B. LN_2 MANIFOLD (SCHEMATIC, SIZING, THERMAL)

V. OTHER TOPICS
- A. VACUUM BREAK
- B. COST ESTIMATES

Item (6) (Helium Tank Bayonet Seizing and Thermal-Acoustic Oscillations)

The bayonet design allows for worst-case differential contraction and should not seize. A recent Lockheed correlation* for the onset of thermal oscillations has been reviewed and our specific geometry has been discussed with its author. The conclusion is that there is a potential for oscillation, but that testing is the only way to be sure. We have increased the radial gap from 0.13" to 0.28" (the conduction heat load is actually reduced by this change) to decrease the probability of oscillations.

Item (7) and (10) (Cooldown Procedures and Times)

A preliminary estimate will be supplied to PPPL, but they are aware and agree that this is one of the reasons for building a prototype.

Item (8) (Emissivity)

Those responsible for sizing the refrigerator should feel free to use a value for the emissivity that they are comfortable with. A special effort to prevent system contamination from backstreaming oil, large accumulations of water vapor, etc. should be worthwhile. Test samples of aluminized stainless steel are being prepared at NASA-LEWIS.

Item (9) (Pump Down Time to 10^{-3} TORR)

The vessel can tolerate 30 minutes in the gas conductive regime without exceeding the allowable stress on the wall.

Other Items:

The support system calculation for the case with the outboard struts at 75° above the horizontal contains an arithmetic error, with the result that we will use a 70° outboard support angle. This gives $\approx$ 1.4 g lateral load capability (and $\approx$ 2.4 g vertical). The other cryopanel structural calculations have been reviewed at PPPL and only minor differences have been found.

cc: L. Pittenger
R. Stone
K. Wright (PPPL)
J. Doggett

L. R. Pedrotti

L. E. Valby

L. E. Valby
Neutral Beam Group
Magnetic Fusion Energy Division

mc

* L. W. Spradley, et.al, Thermal Acoustic Oscillations, Vol II of Contract NAS 8-26642 Final Report, March 1975 (LMSC-HREC TR D390690-II)

Interdepartmental letterhead

Mail Station L- 541

Ext. 5222

August 3, 1977

NTFC # 3032

MEMO TO: Rod Byrns (LBL)
Tom Duffy (LLL)
Jim Haughian (LBL)
Bob Nelson (LLL)
Jack Tanabe (LBL)

FROM: L. R. Pedrotti, L. E. Valby

SUBJECT: TFTR-NBL Cryogenics System Design Review: Implementation of Action Items

---

The following addresses the action items from the Design Review held 7/7/77. Items 1, 2, 7, 8 and 10 will require more time (and preferably, experimental data). We will keep the reviewers informed of progress at their request.

Items (1) and (2) (Burst Discs)

We will resize the burst discs and vent pipes so that peak pressures within the panels are reduced while leaving sufficient margin for potential operational pressure excursions. We cannot at this time project a completion date for this, but the hardware involved is relatively short lead time and should not affect assembly schedules.

Item (3) (Level Control in LN_2 Manifold)

The liquid nitrogen level for the manifold as presently designed (without "chicken feeder," etc.) may vary over at least a 3" range (out of 6+") without causing loss of flow or slugging. This should be sufficient margin. Level will be monitored and controlled with a differential pressure gauge (0 to 4" H_2O or 0 to 5" LN_2 range).

Item (4) (Access to Solenoid Valves)

Improved access has been incorporated.

Item (5) (Swinging of Panel Array)

Trusses will be incorporated in the design.

CRYO SYSTEM SPECIFICATIONS (PER ICD)

OPERATING CONDITIONS 68°F - 92°F
40% ±(?) R.H.

" DUTY FACTOR 1/600

OVERALL HEIGHT 7m ABOVE FLOOR
(OTHERWISE WITHIN NBL ENVELOPE)

LIQUID HELIUM CIRCUIT:

TEMPERATURE 3.8 OR 4.5K

CONSUMPTION ≤ 64 WATTS (HEAT OF VAPORIZATION)

SUPPLY QUALITY ≤ 50%

ΔP THRU NBL ≤ 1/4 psi

RETURN TEMP ≤ 5K

LIQUID NITROGEN CIRCUIT

TEMPERATURE ≤ 80K

CONSUMPTION ≤ 415 l/hr

SUPPLY QUALITY ≤ 8%

RETURN QUALITY ≥ 2% (IS 100%)

ΔP THRU NBL ≤ 1/2 psi

PUMPING CHARACTERISTICS: $\int P\,dl < 5\times10^{-5}$ torr·m, $Q_{IN} \leq 1$ torr·l

STRUCTURAL: 0.5g TO ALLOWABLE, 0.7g TO YIELD
(LBL REQUIREMENT)

LAWRENCE BERKELEY LABORATORY
Room: 003 Bldg.: 47 Ext.: 6372

MEMORANDUM August 5, 1977

TO: Buzz Pedrotti

FROM: Jack Tanabe

SUBJECT: Cryopump System for the TFTR Ion Source, A Critique

The presentations made by Lee Pettinger and Larry Valby and the comments made by those active in the design process indicate that the geometry of the cryopump system and the development of the fabrication and operating procedures all are well along to being fixed. Being brought into the picture to review the design at this apparent late stage, the criticisms offered must necessarily fall into three general categories.

I. Those general comments on the system design which will radically affect the present component design. I recognize that these comments may be relatively valueless since (1) the options suggested may have already been discarded due to some "big picture" tradeoffs; (2) their implementation may set the design process back to "square one" and, although potentially valuable, are not worth the design duplication.

II. More specific comments which are implementable but which involve a cost/performance trade off.

III. Suggestions which may avoid problems which may have been overlooked.

Although the first class of problems are the most interesting, the last may be the most valuable.

Category I Comments

Some of the more interesting discussions of the helium circuit seemed to revolve around the accident scenario and the resultant boil-off and the defrost procedures and their frequency and duration. It seems that having a separate cold box for each injector unit (with a central compressor facility) rather than a large dewar fed from a central refrigerator might help both these problems.

Advantages

1. The dewar inventory can be eliminated.

2. The cryopump helium inventory can be drastically reduced. The flow can be in series with the compressor and the presssure difference between the J.T. valve outlet and the compressor input can be used. Thus, frictional loss effects are less important and the flow tube cross section can be significantly reduced.

3. The effects of (1) and (2) are that over pressures might be controlled with a surge tank and blow out disks are a second line of defense. They can be made more modestly since the gas capacitance will dampen the pressure pulse.

4. After a defrost, a refrigerator system will allow use of the sensible heat of the helium to bring the panel down to operating temperature. With a dewar system, a large gas capacitance will be needed to handle the boil off or else a large inventory loss will be needed to be factored into the operating costs for a frequent defrost operating mode.

5. Smaller refrigeration units allow for purchase of fractional spacers (i.e. 6 small refrigerators, 2 spares vs 1 large refrigerator, 1 spare).

Disadvantages

1. Cost.

2. Operation and maintenance in a radioactive environment.

Category II Comments

The discussion of the fabrication of the chevron shields developed some interesting comments on the tolerancing of the chevron supports and the potential for the deformation of the chevrons during brazing and subsequent handling. It seems as if increasing the overlap between chevrons will relax the tolerances and increase the possibility of effectively straightening a chevron without too much of a pumping speed penalty. Also, the discussion of additional simple supports below the cryopanel array to ease the assembly into the source box is a cost effective option. It will reduce the potential for accident during at least two assemblies for the prototype and allow for quicker assembly.

Category III Comments

I believe using ε = .05 or .1 in calculations could be dangerous. I cannot dispute experiments which indicate that H_2 cryofrosts are transparent, but I imagine instances where air could condense on the helium surface during cooldown, defrost, or other transient condition. The enclosed figure indicates that the emissivity quickly goes up to the .40 range with water cryodeposits. I believe the behavior with air will be similar.

Avoid seizing. The "ball in cup" design for the stinger may not be the best design.

A gas passage should be made where the helium stinger seats so as to ease the purge procedure.

The trapped gas space next to the stinger should either be enlarged or supplied with an impedence to avoid thermo-cycling.

Closing

It seemed as though other comments made during the discussions were made by enough of the attendees that including them here will only duplicate the recorded proceedings or written comments made by others. I hope that comments made in Category I are taken with consideration of my ignorance of all the decision processes carried out early in the design effort.

The work presented seems thorough, well conceived, and professional. The design team is well constituted and the preliminary design looks sound. Good luck.

JT:mb
Enclosure
cc: Rod Byrns
Jim Haughian
Ken Lou

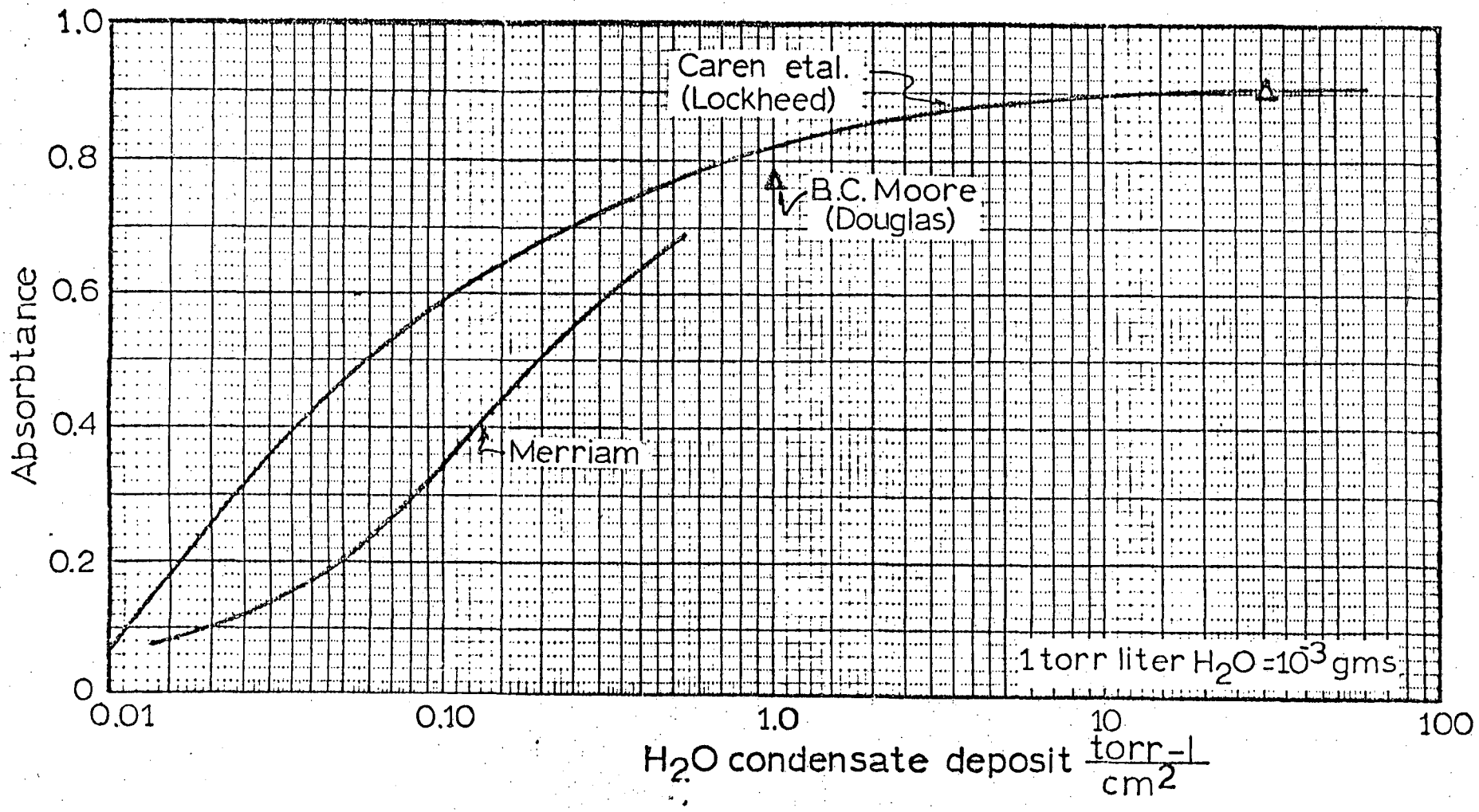

LAWRENCE RADIATION LABORATORY - UNIVERSITY OF CALIFORNIA

ENGINEERING NOTE

AUTHOR | DEPARTMENT | LOCATION | DATE

CODE TF2500

SERIAL M5521

PAGE 106

LBID 208

Interdepartmental letterhead

Mail Station L- 541

Ext. 5222

July 14, 1977

NTFC: 3030

TO: Rod Byrns (LBL)
Tom Duffy (LLL)
Jack Tanabe (LBL)
Bob Nelson (LLL)
Jim Haughian (LBL)

FROM: L. R. Pedrotti

SUBJECT: TFTR-NBL Cryogenics System Design Review

Gentlemen:

This letter contains two items of interest to you.

1. A list of action items.

2. A summary of the minutes of the design review.

I tried to limit the summary only to items not covered in the handbook, and to pertinent questions.

The action items are items which we agreed should be addressed. We will keep you informed as we work our way through the list.

I hope that you can get your comments to me before 7/22 because the details will be very close to completion by 7/30.

Thank you for your assistance, guidance and patience.

Lawrence R. Pedrotti

L. R. Pedrotti, Chairman
NBL Cryogenics System Design Review

LRP:mc

cc: L. Valby
L. Pittenger
R. Stone
K. Wright (PPPL)
J. Doggett

University of California
LAWRENCE LIVERMORE LABORATORY

Action Items:

1. Justify the rating of the burst diaphragms.

2. The interior burst discs should be sized to be above the expected cryopanel pressure in the vent of a SLOVA. (Sudden Loss of Vacuum Accident)

3. The header on the liquid nitrogen will be designed for less critical level control.

4. Access to the solenoid valves in the LN_2 distribution system must be improved.

5. The panel array should be prevented from swinging during installation and removal.

6. The potential problem of the seizing of the bayonet must be considered.

7. The cooldown procedures should be considered in detail.

8. The designer's choice of emissivity and the final decision on aluminizing the panels will be resolved.

9. The maximum amount of time that the vessel will be up to conduction ($> 10^{-3}$ torr) will be calculated.

10. An estimate on cool down time and recooling after defrost will be made.

July 7, 1977

CRYOGENICS SYSTEM DESIGN REVIEW ATTENDEES.

T. J. Duffy LLL
R. L. Nelson
Jack Tanabe LBL
Rod Byrns LBL
George Pinter (Ebasco/Grumman @ PPL - (609) 452-6865)
Joel Glicksman (Ebasco/Grumman @ PPL - (609) -452-6398)
Richard Smith PPPL at LBL
Bill Cooper LBL
R. R. Stone LLL
Bob Burnham LLL
David Peterson LBL
Jim Haughian LBL
L. Pittenger LLL
L. Pedrotti LLL
Ken Wright PPPL
Ben Britchard PPPL
George Martin PPPL
Larry Valby LLL

A SUMMARY OF THE MINUTES OF THE TFTR NEUTRAL BEAM LINE CRYOGENICS SYSTEM DESIGN REVIEW

Discussion of Differential Pumping - L. Pittenger

Lee presented the calculations shown in the handout, File II-A.

Discussion of the Cryogenics System - L. Valby

The cryogenics system consists of three sub-systems; the cryopanels, the LN_2 distribution system and the LHe distribution system.

The cropanels consist of eight nearly identical modules covering a gross area of 34 m^2 with external dimensions of 12 feet high x 16 feet long x 1 foot wide per side. The total weight is 12,000 lbs.

Four modules reside on each side of the beamline. They are supported from the vessel cover, and are removed by removing the cover. Each module is fed separately with liquid Nitrogen, to reduce interior plumbing.

The liquid helium distribution system is internal with a parallel feed.

The cryopanel chevrons are made of formed 1/16" copper sheet with 1/16" overlap on the chevron design. This 1/16" overlap results in a significant pumping area reduction. The net active pumping area is 29 m^2.

The cooling of the chevrons is accomplished by passing LN_2 through two rectangular tubes (1" x 3-1/2") which the chevrons are brazed to.

The rectangular piece is formed from schedule 10 seamless type 316 L pipe.

The quilted panels are formed by taking sheets of stainless steel, spot welding them together in a pattern and inflating hydrostatically.

The helium panel fits between the back panel and the chevrons and is fed from the bottom, with a return on the top.

The driving force for the liquid distribution system is the different densities between the hot column and cool column.

Both the helium feed and return line are fully shielded by liquid nitrogen traced lines.

The liquid helium dewar has a water volume of 850 liters. It is hard mounted to the top of the vessel with compliance in the bayonet being provided by bellows and a sliding gas seal.

A picture of the tank bayonet and diverter valve is shown after page III-D-12 in the notebook.

The tank is designed to take 15 psia external and 70 psi internal pressure.

The liquid nitrogen distribution system consists of a 6" i.d. dewar feeding each of the modules individually through one of eight outlets.

George Martin (PPPL) expressed concern that aligning the eight attachment points of the dewar to the individual module openings would be difficult.

Larry responded that bellows provided ample flexibility.

The coupling from the LN_2 distribution feed to the individual module feed is made by Marmon clamps. The insulation is provided by static gas.

Bill Cooper (LBL) asked if the vacuum pump which evacuates the LN_2 distribution line and the valve isolating it are critical items. Also: will this pump be on the automatic vacuum system?

The pressure rating on the bellows on the LN_2 distribution system is about 30 psi. (Note: squirm of the bellows first occurs at 50 psi).

On the helium system, everything internal to the vessel is rated at 400 psi.

The punched strip of tabs and backing strip are brazed to the faces of the rectangular tube and the sides. The chevrons are brazed to the tabs.

Jack Tanabe (LBL): Is there no way to make the brazing a one step operation?

Larry: The details will be provided by the vendors.

Ken Wright (PPPL) Is the tooling cost effective based on one vessel alone?

Larry. Yes, and we'll retain all tooling. (Note our shop estimates a maximum of $3K for punched strip and chevron cooling).

Jim Haughian (LBL) suggested heliarcing the chevrons.

George Martin (PPPL) recounted (PPPL) problems with furnace brazing chevrons. It seemed to be due to vendor carelessness rather than poor design.

The total tolerance allowed in brazing is .060".

Ken Wright (PPPL) asked if the design was compromised by the choice of material existing at Princeton.

Larry responded that the material can be sheared to ± .005" if necessary. (Note: the existing PPPL material is ± .050" We will purchase new material for approx. $7K.)

George Martin (PPPL) - Are you reaching the limit on pumping speed?

Larry - We are getting close to the ICD limit.

George Martin (PPPL) recommended the purchase of a 'good' storage and shipping fixture. Also, lifting eyes should be added for handling.

All the joints inside of the vessel are welded. Welding equipment exists commercially for this type of weld.

Jack Tanabe (LBL) and George Martin (PPPL) related their successful experience with demountable cryogenic joints.

An assembled leak test will be done on each module in the Baseball Vacuum vessel.

To assemble them after leak checking, the four modules after attachment to an appropriate fixture will be bolted together to form an array. This array will then have the helium distribution lines connected to it. Finally, the lid will be lowered onto both arrays, with appropriate care being taken to align the vacuum boundary penetrations.

It should be noted that the cryosystem has been designed with the remote handling requirement in mind.

When the two arrays are located in place they will be cross braced to limit individual movement.

In a Sudden Loss of Vacuum Accident the pressure within the quilted panels can go almost to the inflation pressure (approx.25 atm). This pressure rise can occur in 100 milliseconds, if the system isn't vented.

The internal burst disc will be set at 10 or 15 atmospheres. The top discs are set at 3 atm.

Ken Wright (PPPL): expressed concern that the lower burst discs might blow during the SLOVA even after the top discs have burst, because they are set below the maximum internal pressure the panel may see.

Tom Duffy (LLL) suggested that the welded burst diaphrams can be a nuisance.

George Martin (PPPL) asked if the system will be pressure tested.

_____: What happens to the contents of the dewar and the LN_2 distribution system during a SLOVA? (Note: the dewar is protected with burst discs and the LN_2 manifold is equipped with relief vents).

Jack Tanabe (LBL) asked if thought had been given to purging of the helium system? Are you worried about condensing ice within the bayonet?

Tom Duffy (LLL) In that vein you may never get them apart. There is some recent unfavorable LLL experience in this matter.

Rod Byrns (LBL) asked about the radiation load from the unshielded burst disc.

Larry later estimated it to be approx. 0.2 watts per disc.

Larry asked if we are going to run into a problem with thermal oscillation in the bayonet.

Tom Duffy responded that with 1/8" clearance on a side it was unlikely, but if it did occur the bayonet could be wrapped with insulation. (Note: or the 1/8" gap could be increased).

The support system of the array is designed to compensate for differential contraction and to limit potential array movement.

The calculations were reviewed. (As shown in the Notebook III-A). The support rod is Ti-6Al-4Va alloy.

Jim Haughian (LBL) asked if the panels are interconnected at the top and bottom.

The total heat load of the LN_2 system is expected to be 110 liters/hour, with most of the load on the chevrons.

The LN_2 natural circulation system was discussed. (See Handbook Section III-B).

The system is self correcting as long as the chevrons have the largest heat load. The flow will be forced during cooldown.

Jack Tanabe (LBL) suggested that a chicken-feeder system be used to provide level control of the LN_2 distribution system.

In order to get uniform fluid levels the distribution system must be level relative to the earth's gravitational field.

Tom Duffy (LLL) asked what is the flow velocity across the top of the LN_2 liquid? (Note: less than 1 ft/sec)

George Martin (PPPL) suggested that the distribution riser would function as a more sensitive level sensor.

He also asked if the thermosyphon pressure head was enough to push returning helium into the dewar when it was almost empty? (Note: this is being looked into).

The liquid helium circulation is covered in the Notebook page III C-2.

George Martin (PPPL) asked if the LN_2 system would continue operating during regeneration.

Bob Nelson (LLL) said LLL comprised in the helium dewar for baseball by putting the outlet in the tank half way up into the dewar. This has worked successfully.

Joel Glicksman (Grumman) pointed out that because of the change in head the liquid helium at the bottom of the cryopanel will boil at a higher temperature.

The lidquid helium consumption will be 37.8 watts if the panels are not aluminized. NASA Lewis in Cleveland can aluminize on both sides at a cost of $5,000 for all 8 panels. This could save $100,000 @ LBL for 1 year's operation based on a 25% duty cycle and $1 dollar/liter delivered LHe.

Including the panel vents to the outside and eliminating the LN_2 cooling of the dewar raises the net consumption to 50.3 watts or 30.8 watts if aluminized (See Page III-D-1)

Ken Wright: What effect do the monolayers of gas have on the emissivity?

Lee answered that quite a thickness of hydrogen and deuterium can be tolerated, and transparent without effecting the emissivity.

The calculations are based on an emissivity of 0.2.

A discussion followed concerning the degree of conservatism insured by using 0.2. George Martin (PPPL) maintained that on a clean stainless system at PPPL he has found that $\varepsilon = 0.1$ is closer to reality. The LBL reviewers, Rod Byrns, Jack Tanabe, and Jim Haughian claimed that experimental data at LBL and at Bendix shows that in time the emissivity approaches 0.4.

The distinction between 0.1, 0.2 and 0.4 results in significantly different refrigerator heat loads.

It was concluded that since there was no consensus of experience, the judgement of the system designer should be followed and that the

refrigerator purchaser should make his own decision on the appropriate factor of safety to apply.

The sputtering copper from the ion dump and calorimeter may also affect the emissivity but it is difficult to tell to what extent.

Whether aluminizing the panels will be effective in reducing the heat load depends on whether it will stick, how much it will cost and what the actual emissivity of the deposited coating is. Again, different members did not arrive on a consensus.

Ken Wright and George Martin (PPPL) asked if a test could be done on the existing cryopanel test equipment at LBL to gauge the effect of aluminizing.

The LN_2 shield which surround the LHe dewar saves about 7.5 watts when compared to super insulation. But superinsulation may simplify the design considerably.

Joel Glicksman (Grumman) Which heat load applies which makes the return line superheat?

Larry responded that it wasn't shown in the booklet.

Joel Glicksman (Grumman) Do you know what they are?

After the helium gas leaves the vapor space of the storage dewar it receives about 15 watts additional energy. If the LN_2 cooling is used, it will be more like 3 watts.

The defrosting of the panels will be the quick blowoff scheme allowing the panels to cool rapidly by valving off liquid coolant.

The boiloff of LHe will take about 3 hours after the flow is stopped. During the boiloff the pressure isn't expected to rise in the vessel above 13 torr.

George Martin (PPPL) asked how the gas input into the vessel will be monitored to insure the administrative limit isn't exceeded?

Two methods were suggested to limit gas input. One, was to use an integrating gas flowmeter. The second, was to use a controlled volume of gas.

George Martin (PPPL) asked what the procedures are for an air leak.

Larry responded that the 13 torr limit is non-explosive for any air mixture, so that no extra precautions are necessary.

The defrosted mixture will be removed by the existing vacuum system.

George Pinter (Grumman) asked what the total time allowable in the 10^{-3} torr region is?

Buzz responded that the calculation is in the works.

The recool time has not been estimated.

The regeneration cycle during deuterium operation will occur once every three months. During tritium operation, the vessel will be regenerated about once per week, reaching a peak pressure of about one torr.

Ben Pritchard (PPPL) mentioned that Princeton is being pressured to operate on tritium from day one.

Ken Wright (PPPL) mentioned that the limit on gas tritium operation is set by the gas storage canisters, which are very expensive.

George Martin (PPPL) asked what the effect of a defrost pressure surge will be on the dewar? (Note: valve will be in cooldown position during regeneration, thus isolating dewar).

Ken Wright (PPPL) observed that a large unexpected pressure excursion could occur during defrost if a large amount of undetected N_2 built up on the LHe panel.

George Pinter (Gruman) described Grumman's plans to keep the distribution lines cool during recirculation.

The valve assembly in the LHe tank can be removed if it malfunctions.

The volume of the helium tank was determined by attempting to get about a day's helium supply with the space constraints.

The introduction of a controlled volume of gas to rapidly induce defrosting was discussed. It was cautioned that the thermal stresses set up by cooling of the vessel must be limited.

The entire bayonet stack within the LHe dewar cannot be removed without taking the dewar apart.

Jack Tanabe (LBL) observed that some of the problems associated with the system are due to the dewar. He asked if individual refrigerators for each beam line had been considered by Princeton.

Rod Byrns (LBL) responded that Princeton had in a preliminary study but rejected them as being too bulky and costly.

George Martin (PPPL) added that the dewar gives system continuity during refrigerator shut downs.

Each NBL contains 750 liters of LHe in the dewar plus about 150 liters in the panels.

At this point, discussion of the LN_2 distribution system began. (See Notebook Section IV-B, page 1). The cooldown schematic was discussed.

The cooldown line is a means of forcing circulation into the bottom of the LN_2 panels.

Tom Duffy (LLL) asked how the valves in the cooldown circuit were fished out when they go bad.

When told that a weld must be broken, Tom suggested that an easily removable bolted flange be added for each valve to ease replacement in the event of a malfunction. (Note: this has been incorporated).

The panels must be uniformly cooled at a slow rate to reduce stresses. The uniform cooling will also reduce thermally induced stresses on the supports.

George Martin (PPPL) asked if there were any thermal stress problems on the LHe panels?

The LHe panels are allowed to contract upwards about 1/2". So that thermally induced contraction isn't restrained.

_____: A question was asked about the effect of cool down distortion on the valves: would they lock open or closed?

George Martin (PPPL) asked what kind of temperature sensors will be used on the LN_2 circuit?

Larry responded that thermocouples will be used. Larry then asked if anyone knew of a reliable, accurate temperature sensor for LHe temperatures that isn't affected by radiation.

Rod Byrns (LBL) suggested a gas bulb thermometer.

George Martin (PPPL) suggested that a liquid level indicator could be made from resistors but that their outputs drift.

At this time, the system is designed to have a LHe level indicator at the top of each panel.

Jack Tanabe (LBL) asked if it was possible to lacte the LN_2 feed lines on the center and cooled outward so the system of thermal stresses would be forgiving?

Larry responded that the top space is very limited.

As a last note the whole system will be operated at $3.8^{o}K$ as well as $4.2^{o}K$.

The questions listed by George Pinter (Grumman) are not listed here, but are available if necessary.

Pirates - #1

FLUID INTERFACES

1. Helium

a. Liquid flow rate. Are 63 W based on evaporation of liquid helium plus 0.5°K superheat? If so, the actual superheat will be considerably less, since the system introduces a significant amount of vapor (> 50%). -- Clarification needed.

64 w. heat of vaporization + 3 watts superheat (15W superheat if LN_2 shroud eliminated)

b. Is the heat input into the helium the same at the 4.5°K and 3.8°K conditions? yes.

c. ~~How long~~ Can we tolerate increase or decrease of system pressure level in case of electric power loss? Is it permissible to increase from 3.8 → 4.2 and/or decrease from 4.5 → 4.2°K during that time? yes

Yes.

d. What is the fluid capacity of the panels and plumbing? ≈ 150 l

2. Nitrogen ~110 l/hr

a. Flow rate. Any change? Flow rate control must be good for low rate.

b. Pressure/Temperature. We will deliver (according to latest thinking) below 78°K. LN_2 with ~~better~~ less than ~~98%~~ 8 quality. The vent line pressure drop is less than 1.5 psia.

c. We provide purge gas, but without pressure regulation. What is allowable purge pressure? Vacuum capability needed.
50 psia ~~absolute~~ maximum (40 psia preferred)

d. What controls the LN_2 flow rate into the NBL?
throttling type valves — control signal is differential pressure gauge used as level sensor

e. What is the LN_2 reserve capacity inside NBL? ~90l (total ~350l in NBL + manifold)

f. How long can we tolerate no LN_2 flow? ≲ 1 hour

ELECTRICAL INTERFACES

1. What type of signals will control the inlet flow valves for LHe and LN_2? CICADA compatible, linearly proportional to depth

2. Who will be responsible to provide the "Black Box" (control, feedback loop, intelligence, etc.) between, say, level signal and valve? you

3. We plan to keep valve positions, in case of loss of power, unchanged for 30 sec, by which time diesel power takes over. Is this acceptable? yes

4. What measurements will be provided, like:
   Dewar pressure and temperature ✓
   Return temperature ✓
   Others? Many

MECHANICAL INTERFACES

1. Size, configuration, spatial location of both helium and nitrogen connectors, with details of the mating parts to be joined to the delivery line are needed.

2. Are the connectors on the Target Chamber identical to those on the NBL's? ? Are all other characteristics and requirements (pressure, temperature, quality) the same? yes

3. How long are the connectors -- or, rather, what length of motion is needed to separate them? He: 26" LN_2: 9"

4. We must have a reference level on the NBL, independent of the Berkeley drawing; e.g., is the NBL ℄ same as Torus ℄ ? yes

Pirate #3

(Retained)

5. Weights, materials, heat capacities of LN_2 and LHe cooled systems. SS/Cu Helium ~ 2350 lb LN_2 (only): ≈ 11,500

6. What cleanliness levels do we receive ~~inside~~ the helium and the nitrogen systems? as though for high vacuum service.

OPERATIONS/REGENERATION

1. What is the present preferred method of regeneration? fast

2. What are the details/duration of regeneration? establish on prototype.

3. If fast regeneration, will He panel be purged fast with LHe, or will liquid be allowed to boil off at normal conditions? To what temperature will panel be allowed to be warmed? (Note: For the present we do not provide for purge helium to be returned into the cryogenic system.) establish on prototype.

4. If fast regeneration, what is the allowable time spent at $p > 10^{-3}$ torr? (Answ: ≈ 30 min.)

5. What is the expected NBL pressure level before flowing cryogens (hopefully not less than 10^{-5} torr!). 10^{-5} OK

6. How long does it take to initially cool the panels? How long does it take to re-cool after regeneration? establish on prototype.

7. What are the cool-down sequences for both LHe and LN_2? establish on prototype.

~~8.~~ How many NBL's will be regenerated at the same time?

(Answ: Not necessary) 9. No Do you agree continuous fill is preferable to batch fill (for LHe)?

~~10.~~ What purity level is required for D_2 (with respect to H_2, in particular)?

11. What is LN_2 consumption during regeneration? probably shut off LN flow during regen.

PROCEDURAL

1. How are we tied into NBL interface or detail design changes? Is there a formal configuration control procedure?

2. Are we on SI units, or, if not, what units are being used?

Princeton's comments
Post. design review.
Return to the File
BUZZ

PRELIMINARY DESIGN REVIEW OF CRYOSYSTEMS

July 7, 1977

1. Justify rating and size of pressure relief diaphragms; i.e. is 1-1/2" dia big enough and 3 atms adequate to allow for cool-down, quick regeneration and/or other surges?

2. Rating of bottom burst disks inside of vacuum enclosure must be set above the pressure in this panel for a 4" dia leak and at 1/2 of the panel forming pressure.

3. Analyze misalignment values, and use an appropriate header (or Dewar) on LN_2 manifold to allow for less critical liquid level control.

4. Solenoid valves for GN_2 should be accessible.

5. Oscillations can occur in bayonnet. Some analytical prediction is now possible. (Contact E/G if interested)

6. Locate stiffeners to limit swing at bottom of panels in areas of no internal interference. (trues)

7. Bayonets--watch out for thermal shrinkage with freeze-stick together.

8. Identify cool-down procedures (including time/temperature profiles) for various modes of operation (e.g., normal chill-down and following regeneration).

9. Aluminizing of LHe panels is to be decided by LBL/LLL. If cost is low and no delay in schedule and if promising, do some tests to demonstrate effectiveness before actually plating big panels. (Emissivity of panels is questionable.)

10. Instrumentation. Lots of redundant measurements on prototype. Simple, reliable instrumentation, and as few as consistent with operational

requirements on production NBL's.

11. Determine permissible time spent above 10^{-3} torr during quick regeneration.

FINAL DESIGN REVIEW
SEPT. 26, 1978
PPPL

CRYOPUMPING SYSTEM

- DESIGN REQUIREMENTS
- DESIGN DESCRIPTION
- SYSTEM PERFORMANCE
- DESIGN RATIONALE
- OPERATION

CRYOSYSTEM DESIGN REQUIREMENTS

- PUMP 90 t·ℓ/s D_2 WHILE MAINTAINING:

  $$\int_{\text{MAGNET}}^{\text{DUCT}} P\,d\ell < 5 \times 10^{-5}\ \text{t·M}$$

  $$Q_{\substack{\text{INJECTED}\\ \text{INTO TORUS}}} < 0.25\ \text{t·}\ell\text{/SHOT}$$

- MUST WORK IN TFTR ENVIRONMENT
  (EDDY CURRENTS, NUCLEAR EFFECTS)

- OPERATION AT 3.8 OR 4.5 K

- HELIUM HEAT LOAD < 65 W.
  (DELIVERED AT ≤ 50% QUALITY, ΔP < 1/4 PSI)
  (8 HOUR AUTONOMY)

- NITROGEN CONSUMPTION < 415 ℓ/HR
  (DELIVERED AT ≤ 8% QUALITY, ΔP < 1/2 PSI)

- COOLDOWN IN 24 HOURS

- REGENERATION ≈ 8 HOURS

- VACUUM BREAK EQUIVALENT TO 4" DIA HOLE

- AT LBL: 0.7g EARTHQUAKE LOADS.

Hardware design features

- System includes cryopump array and cryogen supply system
- Cryopump array includes 8 modular cryopumps, 4 on each side of vacuum chamber
- Each module is ≈ 3.6 m high X 1.2 m wide and weighs 680 Kg
- Cryopump array is suspended under lid of vacuum chamber; supports compensate for differential contraction
- Cryogen supply system is mounted on top of vacuum chamber lid; includes liquid helium dewar and liquid nitrogen distribution manifold
- Total system weight ≈ 6800 Kg (15,000 lb)

Color code

- Liquid helium
- Two phase helium
- Liquid nitrogen
- Two phase nitrogen
- Gas return

Cryopump array

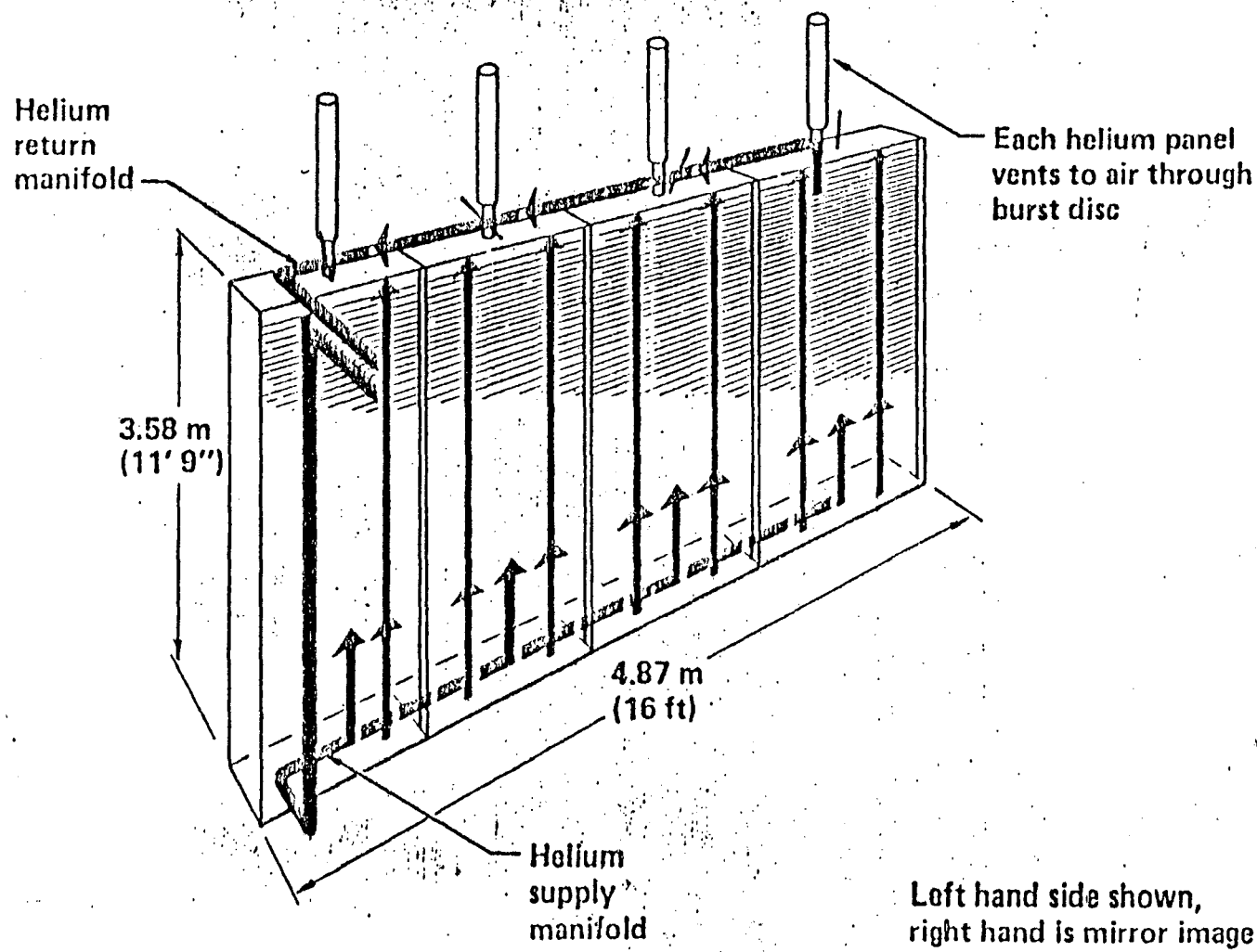

Cryogen storage system

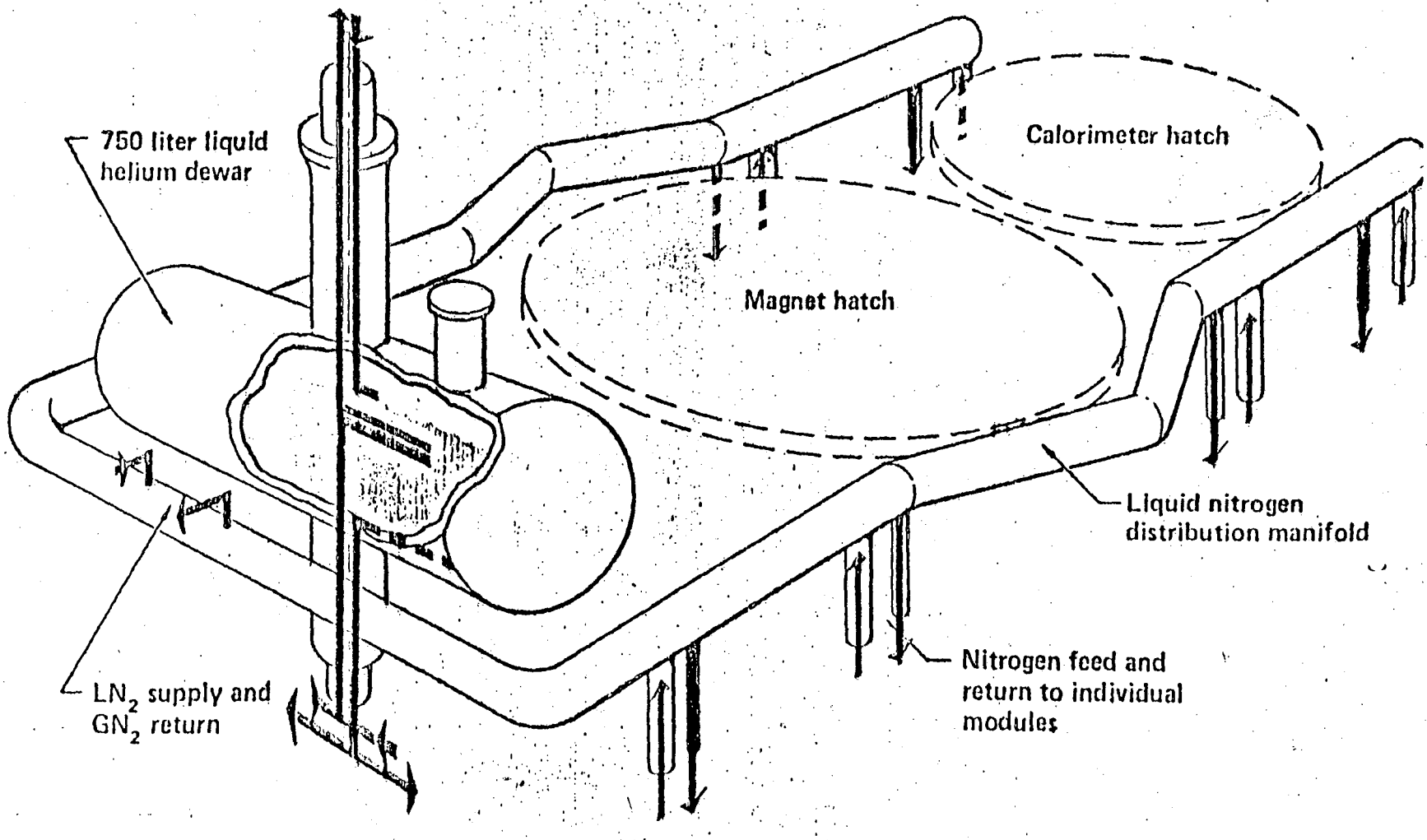

CRYOPUMP PERFORMANCE

- 29.5 M^2 ACTIVE PUMPING AREA
  2.5×10^6 ℓ/S SPEED FOR D_2

- DIFFERENTIALLY PUMPED CHAMBERS
  $P_1 \approx 9 \times 10^{-5}$ TORR
  $P_2 \approx 2.2 \times 10^{-5}$ TORR
  $P_3 \approx 3 \times 10^{-6}$ TORR
  $\int P d\ell \approx 3 \times 10^{-5}$ t·M
  $Q_{INJ} \approx 0.11$ t·ℓ

- CRYOCONDENSATION ON QUILTED (LHE FLOODED) PANELS WITH LARGE OVERPRESSURE CAPABILITY

- CRYOGENS CIRCULATE IN CONVECTIVELY DRIVEN LOOPS

- CRYOGEN INVENTORIES INSIDE BEAMLINE:
  LHE ≈ 200ℓ
  LN_2 ≈ 250ℓ

- COPPER CHEVRONS "ATTACHED" TO STAINLESS STEEL VACUUM BOUNDARY

- HELIUM HEAT LOAD ≈ 50 WATTS

- LN_2 CONSUMPTION ≈ 110 ℓ/HR

Cryopump Module

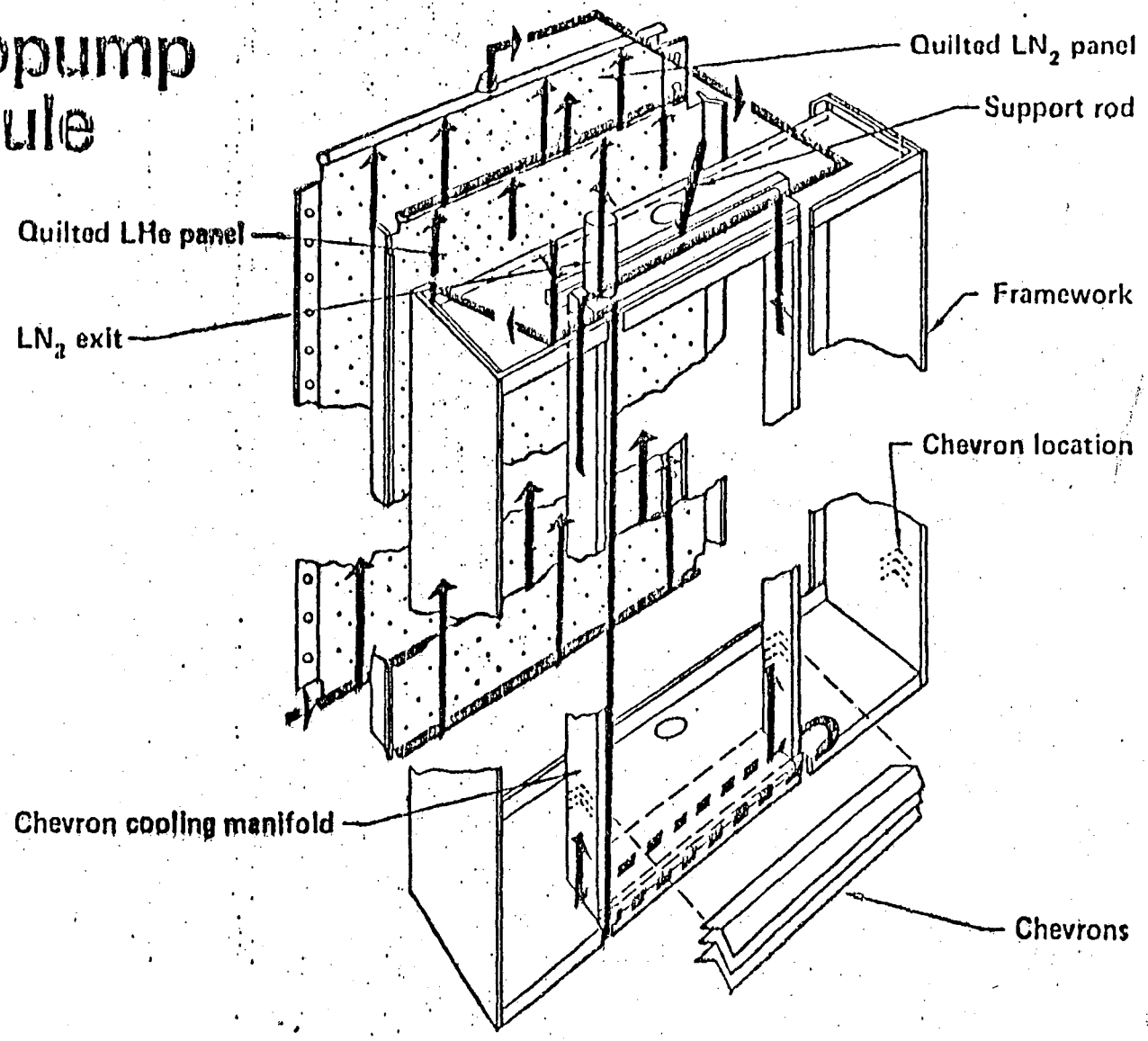

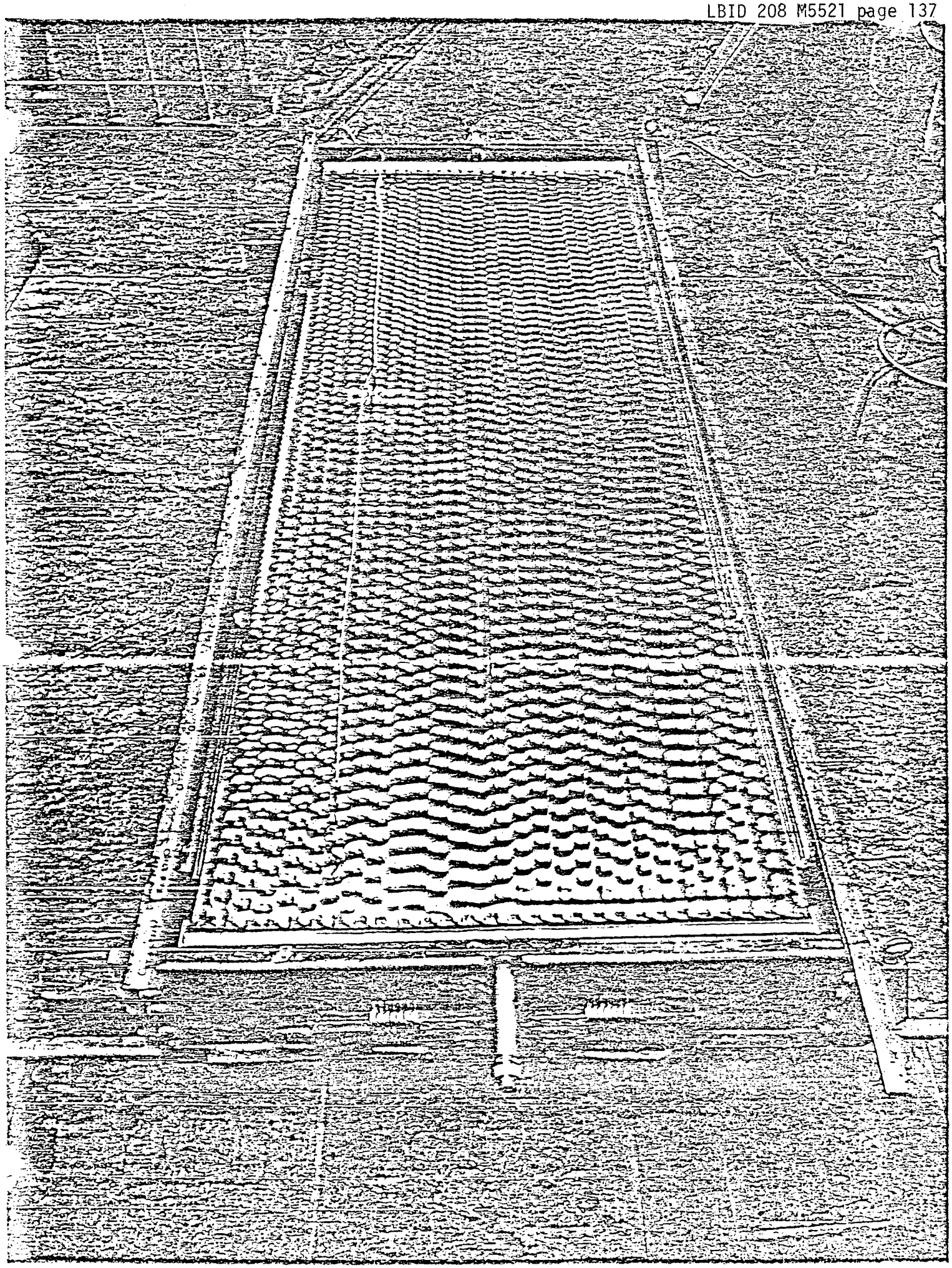

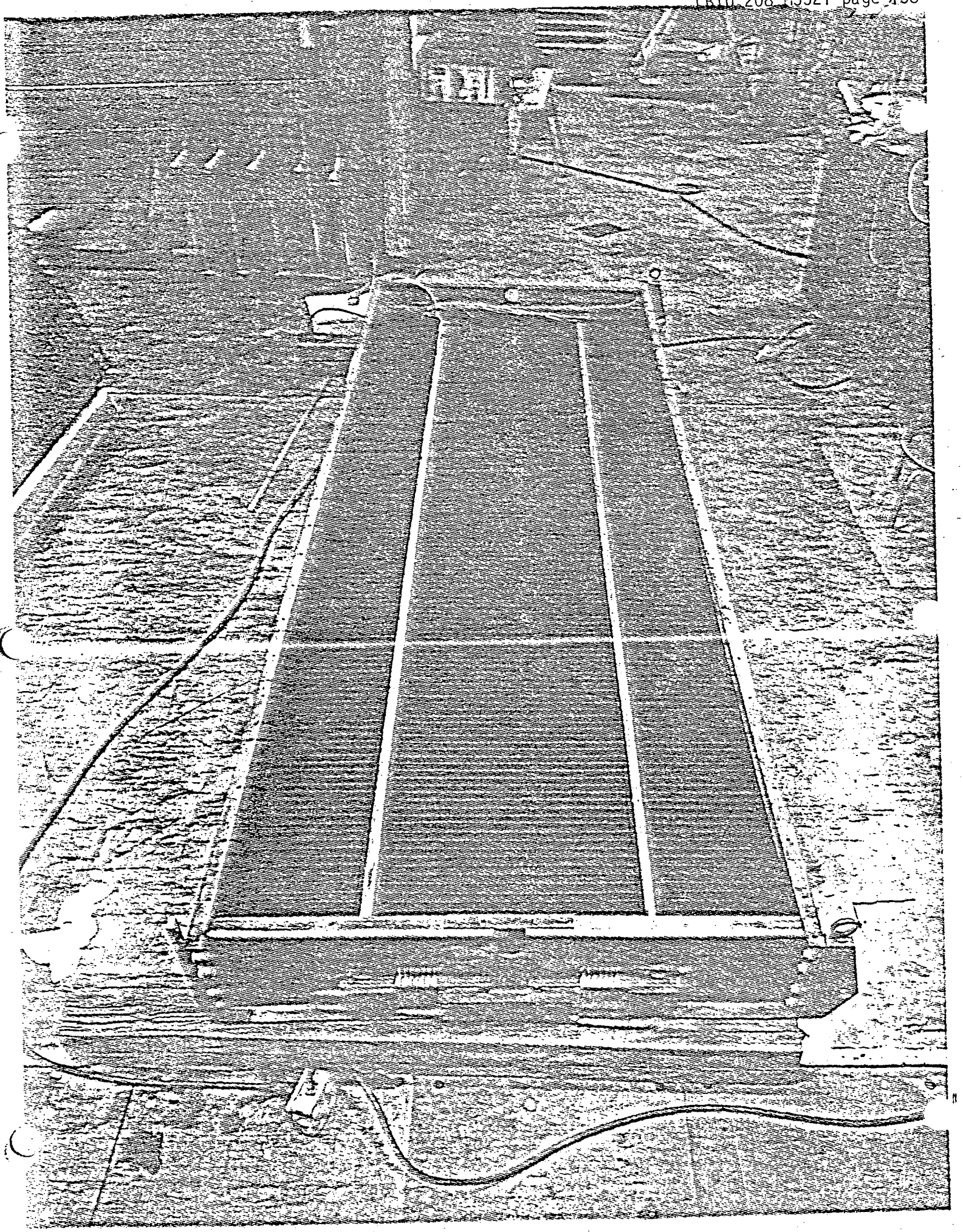

CRYOGEN STORAGE SYSTEM

LIQUID HELIUM DEWAR

- 750ℓ LHE + 100ℓ ULLAGE
- DUAL CONCENTRIC BAYONETS
- INCORPORATES VALVES FOR
  - NORMAL OPERATION
  - COOLDOWN
  - REGENERATION

LN_2 DISTRIBUTION MANIFOLD

- 250ℓ CAPACITY (40′ OF 6″ PIPE)
- INDIVIDUAL FEED & RETURN TO EACH MODULE
- PROVIDES FOR FORCED FLOW DURING COOLDOWN
- MOUNTED ON TOP TO ALLOW MAXIMUM SPACE UTILIZATION INSIDE BEAMLINE & MINIMIZE INTERIOR PLUMBING

DESIGN RATIONALE

OVERALL CONFIGURATION - SIDEWALL PUMPING

- PREVENTS FLOW INSTABILITIES
- RELATIVELY SIMPLE FABRICATION
- ALLOWS MODULAR DESIGN

CRYOGEN SUPPLY SYSTEM - ON EXTERIOR OF N.B.L.

- COMMON VACUUM WITH NBL WOULD CREATE OPERATIONAL PROBLEMS
- MINIMIZES VACUUM JOINTS INSIDE NBL
- ALLOWS MOST SPACE FOR PUMPING
- ALLOWS REPAIR/REPLACEMENT WITHOUT DISASSEMBLING NBL

CRYOPUMPS

FLOODED QUILTED PANELS

- EXTREMELY LOW ΔT'S DURING SHOTS
- SUCCESSFUL OPERATION AT LLL
- PROVIDES CROSSFLOW TO PREVENT CHOKING
- FLAT PANELS EASY TO MAKE

CHEVRON ASSEMBLIES (STAINLESS/COPPER)

- MATCHED EXPANSION COEFFICIENT
- RELIABLE WELDING
- LOW ACTIVATION

OPERATION

COOLDOWN

- 5900 kg TO LN_2 (OF WHICH 1070 kg TO LHE)
- LIMITED BY 2.5 HOUR THERMAL DIFFUSIVITY TIME IN MODULES
- TESTS ON INDIVIDUAL MODULE IN PROGRESS

STEADY STATE

- DURING SHOT, ΔT ON LHE PANEL ≈ 3MK
- LHE HEAT LOADS

84K RADIATION	≈ 30 W
LHE TANK & PLUMBING	6
VENT PIPES	6.6
DUTY CYCLE EFFECTS	2.2
MISC.	5.0
	50 W

- LN_2 CONSUMPTION ≈ 110 ℓ/HR
- CONVECTIVE CIRCULATION ≈ 10X MINIMUM TO PREVENT DRYOUT

REGENERATION

- DEPRESS LEVEL IN LN_2 MANIFOLD
- SYPHON LHE OUT OF PANELS (VALVE IN DEWAR)
- PUMP OUT D_2 & RECOOL

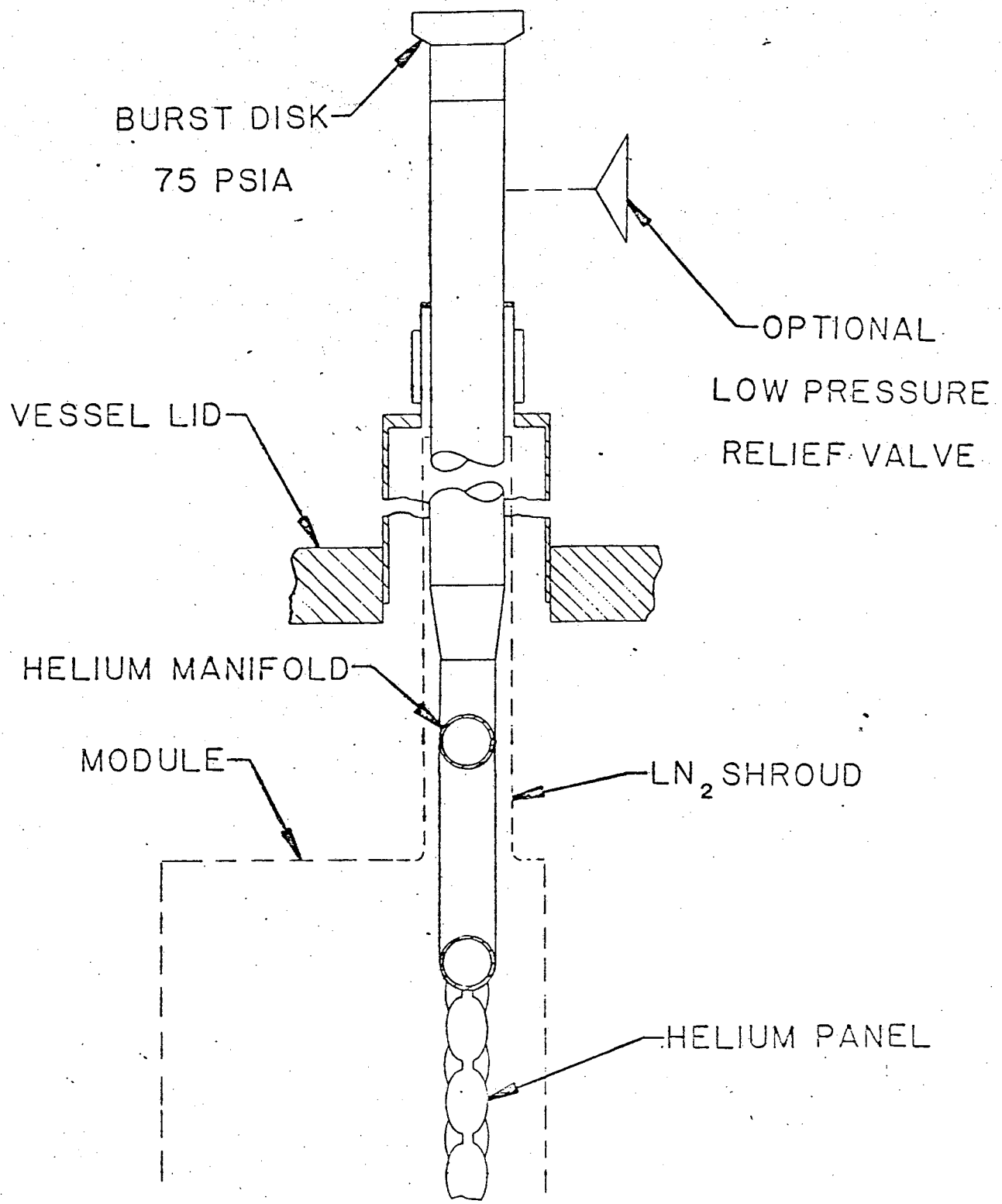
BURST DISK
75 PSIA
OPTIONAL
LOW PRESSURE
RELIEF VALVE
VESSEL LID
HELIUM MANIFOLD
MODULE
LN_2 SHROUD
HELIUM PANEL

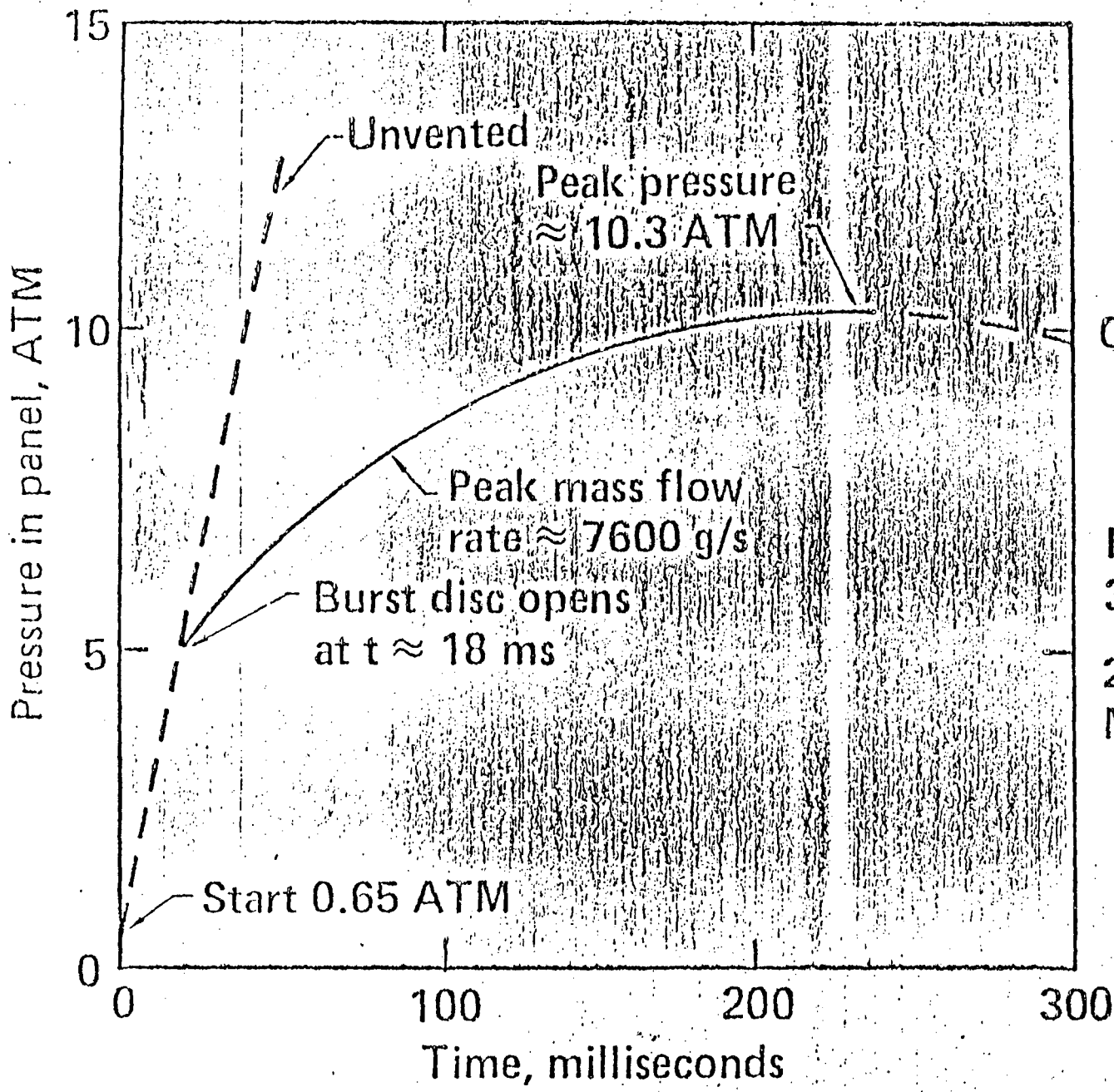

Conditions:

261,800 watts onto panel, initially full at 3.8 K

Isentropic flow through 3.48 cm dia opening

20 ms time steps using NBS helium properties

14) AAA-77-111678-0A
15) AAA-77-111679-0B
16) AAA-77-111714-0B
17) AAA-77-111715-0B
18) AAA-77-111717-0C
19) AAA-77-111718-0B
20) AAA-77-113511-0A
21) AAA-77-113558-0A
22) AAA-77-113568-00
23) AAA-78-100500-0A
24) AAA-78-103970-00

The above list of drawings is a partial list pertaining to the Cryopumping System. As the remaining drawings become finalized, they will be transferred to LBL.

Please refer all questions to Lee Pittenger, x-29909 or Reg Wood, x-29914.

R. Wood
Neutral Beam Group

RW/dl
Distribution:

LLL	
C. Bishop	L-129
B. Denhoy	L-541
D. Loomis	L-541
L. Pittenger	L-541
R. Stone	L-541
L. Valby	L-541
R. Wood	L-541
LBL	
W. Cooper	16
J. Haughian	80C
K. Lou	80C
D. Peterson	930
D. Roth	80C

Interdepartmental letterhead

Mail Station L- 541

Ext: 29914

M E M O R A N D U M July 12, 1978

TO: Distribution

FROM: R. Wood

SUBJECT: Neutral Beamline - NBSTF Cryopumping System Tracing Transfer

- -

It has been requested by Ken Lou of LBL that all tracings pertaining to the Cryopumping System for the Neutral Beam Line - NBSTF be transferred to LBL custody. I have discussed this transfer with Cliff Bishop of LLL Mechanical Engineering Administration Division, and he has agreed to transfer all tracings under the following conditions:

1) The LLL logo and name section of the title block must be removed;

2) The "AAA" portion of the drawing number must be removed from the title block.

Assuming that there are no objections to the above conditions, the following list of drawings will be transferred to LBL immediately.

1) AAA-77-111009-0C
2) AAA-77-111010-0B
3) AAA-77-111011-0B
4) AAA-77-111012-0C
5) AAA-77-111013-0B
6) AAA-77-111014-0B
7) AAA-77-111015-0A
8) AAA-77-111016-00
9) AAA-77-111017-0A
10) AAA-77-111018-0A
11) AAA-77-111019-0A
12) AAA-77-111037-0B
13) AAA-77-111041-0A

Interdepartmental letterhead

NTFD #3125

Mail Station L- 541

Ext: 29914

M E M O R A N D U M

January 29, 1979

TO: Distribution

FROM: Reginald D. Wood

SUBJECT: Neutral Beam Line - NBSTF Cryopumping System Tracing Transfer

- -

The following drawings have been finalized for custodial transfer to LBL. As in the past, transfer will be made under conditions specified in memorandum NTFD #3070, dated July 12, 1978.

1) AAA77-113555-00
2) AAA77-113574-00
3) AAA77-113575-00
4) AAA78-100501-00
5) AAA78-100502-00
6) AAA78-103962-00
7) AAA78-103963-00
8) AAA78-108821-00
9) AAA78-108822-00
10) AAA78-108823-00
11) AAA78-108824-00
12) AAA78-113872-00
13) AAA78-113874-0A
14) AAA78-119720-00
15) AAA78-119721-00
16) AAA78-119722-00

The above list of drawings is a partial list pertaining to the Cryopumping System. As the remaining drawings become finalized, they will be transferred to LBL.

Please refer all questions to Lee Pittenger, x-29909 or Reg Wood, x-29914.

Reginald D. Wood
Neutral Beam Group

RW/dl: 0733z

Distribution:

LLL	
C. Bishop	L-129
B. Denhoy	L-541
D. Loomis	L-541
L. Pittenger	L-541
R. Stone	L-541
L. Valby	L-541
R. Wood	L-541

LBL	
W. Cooper	16
J. Haughian	80C
K. Lou	80C
D. Peterson	930
D. Roth	80C

Interdepartmental letterhead

NTFD #3126

Mail Station L- 541

Ext: 29914

M E M O R A N D U M

January 31, 1979

TO: Distribution

FROM: Reginald D. Wood

SUBJECT: Neutral Beam Line - NBSTF Cryopumping System Tracing Transfer (4959-23)

- -

The following drawings have been finalized for custodial transfer to LBL. As in the past, transfer will be made under conditions specified in memorandum NTFD #3070, dated July 12, 1978.

1) 77-108336-0E
2) 77-111029-00
3) 77-111030-00
4) 77-111031-00
5) 77-111032-00
6) 77-111033-00
7) 77-111034-00
8) 77-111035-0A
9) 77-111036-00
10) 77-111038-0A
11) 77-111039-00
12) 77-111040-0A
13) 77-111042-00
14) 77-111043-00
15) 77-111044-00
16) 77-111045-00
17) 77-111046-00
18) 77-111047-00
19) 78-107675-00
20) 78-107667-00
21) 78-107668-00

The above list of drawings is a partial list pertaining to the Cryopumping System (4959-23). As the remaining drawings become finalized, they will be transferred to LBL.

Please refer all questions to Lee Pittenger, x-29909 or Reg Wood, x-29914.

Reginald D. Wood
Neutral Beam Group

RW/dl: 0740z

Distribution:

LLL	
C. Bishop	L-129
B. Denhoy	L-541
D. Loomis	L-541
L. Pittenger	L-541
R. Stone	L-541
L. Valby	L-541
R. Wood	L-541

LBL	
W. Cooper	16
J. Haughian	80C
K. Lou	80C
D. Peterson	930
D. Roth	80C

Interdepartmental letterhead

Mail Station L- 541

Ext: 29909

NTFD #3138
March 16, 1979

M E M O R A N D U M

TO: Don Roth (LBL)

FROM: L. Pittenger

SUBJECT: LBL-supplied components and parts for the three PPPL LHe dewars

---

Several components and parts are needed by PPPL to complete the assembly of three dewars being built by CVI. Requisitions and Job Orders for these items should be issued by your office to LBL purchasing and shops. The status of these items is summarized below. Suggested quantities of bellows are made to allow for spares.

- 6 ea Bayonet Tip Assemblies, to be ordered
  dwg. no: AAA-77-113503
  example job order: 628754 (copy enclosed)
  parts to order:
  8 ea Bellows: AAA-77-108336 Tab-05
  8 ea Bellows: AAA-77-108336 Tab-01

- 6 ea Small Tip Assemblies, to be ordered
  dwg. no: AAA-78-100522
  example job order: 628754 (copy enclosed)
  parts to order:
  8 ea Bellows: AAA-77-108336 Tab-20

- 4 ea Upper Bayonet Assemblies, already ordered on job orders 629260 and 631330, but the bellows was ordered for one only, on job order 631330 (copies enclosed)
  dwg. no: AAA-77-111283
  parts to order:
  4 ea Bellows: AAA-77-108336 Tab-03

- 3 ea Lower Socket Assemblies, to be ordered
  dwg. no: AAA-77-108345
  example job order: 628742 (copy enclosed)

- 3 ea Diverter Valve Stem Assemblies, to be ordered
  dwg. no: AAA-78-117875
  example job order: 629659 (copy enclosed)
  parts to order:
  3 ea springs, Lee Springs #LC-125M-0
  12 ea springs, Lee Springs #LC-045D-15
  3 ea springs, Lee Springs #LC-105L-6
  (refer to LBL P.O. #5640102)
  4 ea bellows, Metal Bellows #600-35-5
  (refer to LBL P.O. #5640002)

- 3 ea Diverter Valve Drive Assemblies, to be ordered
  dwg. no: AAA-78-1110478
  example job order: 630634 (copy enclosed)
  parts to order:
  6 ea Duff-Norton Mini Pac Jactuators,
  Part #MPA6405, 12 VDC w/2" Stroke
  (refer to LBL P.O. #3199502)
  3 ea American Magnetics LHe Level Probes, #KE-101
  (refer to LBL P.O. #4202702)
  3 ea Deutsch Connectors, #DM5624-7-*P
  (no previous P.O.)
  60 ea Belleville Washers, P.I.C. #D6-26
  (refer to LBL P.O. #5926402)
  6 ea Linear Potentiometers, Allied Stock #606-2040, 10 kΩ
  (refer to LBL P.O. #5926402)
  4 ea Bellows, AAA-77-108336 Tab-13
  4 ea Bellows, AAA-77-108336 Tab-12

- 6 ea He Tank Leg Guide Pins, to be ordered
  dwg. no: AAA-77-111244 Tab-01
  example job order: 629622 (copy enclosed)

- 6 ea He Tank Leg Guide Pins, to be ordered
  dwg. no: AAA77-111244 Tab-02
  example job order: 631898 (copy enclosed)

- 3 ea Diverter Valve Housing and Burst Discs, Modified,
  already ordered on job order 630609

I suggest you check bills of materials on each drawing listed on the job orders to ensure completeness of parts orders.

L. Pittenger

L. Pittenger

LP:dl
Enclosures (8)
cc: R. Wood
L. Valby
K. Lou (LBL)
D. Peterson (LBL)
A. Roberts (LBL)

Interdepartmental letterhead

NTFD #3148

Mail Station L- 541

Ext: 29914

April 10, 1979

M E M O R A N D U M

TO: Distribution

FROM: Reginald D. Wood

SUBJECT: Neutral Beam Line - NBSTF Helium Dewar-Upper Bayonet Tracing Transfer - 4959-23

The following drawings have been finalized for custodial transfer to LBL. As in the past, transfer will be made under conditions specified in memorandum NTFD #3070, dated July 12, 1978.

1) AAA77-113500-00
2) AAA77-113501-0A
3) AAA77-113502-0A
4) AAA77-113503-0A
5) AAA78-100522-00
6) AAA78-100523-00
7) AAA78-100524-00
8) AAA78-110452-00

The above list of drawings is a complete list pertaining to the Helium Dewar-Upper Bayonet.

Please refer all questions to Lee Pittenger, x-29909 or Reg Wood, x-29914.

Reginald D. Wood
Neutral Beam Group

RDW/da

Distribution:

LLL		LBL	
C. Bishop	L-541	W. Cooper	16
B. Denhoy	L-541	J. Haughian	80C
L. Pittenger	L-541	K. Lou	80C
R. Stone	L-541	D. Peterson	930
L. Valby	L-541	D. Roth	80C
R. Wood	L-541		

Interdepartmental letterhead

Mail Station L- 541

Ext: 29905

NTFD #3149

April 24, 1979

M E M O R A N D U M

TO: Distribution

FROM: Reginald D. Wood

SUBJECT: Neutral Beam Line - NBSTF LHe Main Dewar Tracing Transfer - 4959-23

- -

The following drawings have been finalized for custodial transfer to LBL. As in the past transfer of drawings will be made subject to conditions specified in memorandum NTFD #3070, dated July 12, 1978.

1) 77-108338-00
2) 77-108339-00
3) 77-108340-00
4) 77-108341-00
5) 77-108342-00
6) 77-108343-00
7) 77-108346-00
8) 77-111000-00
9) 77-111001-00
10) 77-111008-00
11) 77-111020-00
12) 77-111021-0A
13) 77-111022-00
14) 77-111023-00
15) 77-111049-00
16) 77-111200-00
17) 77-111201-00
18) 77-111202-00
19) 77-111204-00
20) 77-111205-0B
21) 77-111206-00
22) 77-111207-0A
23) 77-111208-00
24) 77-111220-0A
25) 77-111243-00
26) 77-111292-0A
27) 77-111294-00
28) 77-111296-00
29) 77-111297-00
30) 77-111298-00
31) 77-111299-00
32) 77-111651-0A
33) 77-111652-00
34) 77-111656-00
35) 77-111657-00
36) 77-111664-0A
37) 77-111666-00
38) 77-111668-00
39) 77-111669-00
40) 77-111670-00
41) 77-111672-0A
42) 77-111673-0A
43) 77-111682-0A
44) 77-111702-00
45) 77-111703-00
46) 77-111704-00
47) 77-111705-00
48) 77-111706-00
49) 77-111708-00
50) 77-111709-00
51) 77-111711-0A
52) 77-111712-0A
53) 77-111723-0A
54) 77-111741-00
55) 77-111742-00
56) 77-111743-00
57) 77-111744-0A
58) 77-111745-0A
59) 77-111746-00
60) 77-113505-00

61) 77-113509-00
62) 77-113510-0A
63) 78-100514-00
64) 78-100515-00
65) 78-100516-00
66) 78-100517-00
67) 78-100519-00
68) 78-100520-0A
69) 78-100521-00
70) 78-100526-00
71) 78-100537-0A
72) 78-100538-00
73) 78-100539-0A
74) 78-100541-00
75) 78-100542-0A
76) 78-100543-0A
77) 78-100544-00
78) 78-103906-0A
79) 78-103952-00
80) 78-103953-0A
81) 78-103958-00
82) 78-103959-00
83) 78-103971-00
84) 78-103972-00
85) 78-107663-0A
86) 78-107664-00
87) 78-107666-00
88) 78-107684-0A
89) 78-107690-00

The above list of drawings is a complete list pertaining to the LHe Main Dewar.

It should be noted that final revisions of our drawings do not reflect "as built update" revisions supplied by CVI Corp. Due partially to redesign changes involving proprietory information claims by CVI Corp., insufficient information for complete update of our drawings was supplied. "As built" sepias received from CVI Corp. will be forwarded to LBL for review. LBL will assume responsibility for "as built update" revisions to original tracings as required.

Please refer all questions to Lee Pittenger, x-29909 or Reg Wood, x-29914.

Reginald D. Wood
Neutral Beam Group

RDW/da

Distribution:

LLL		LBL	
C. Bishop	L-129	W. Cooper	16
B. Denhoy	L-541	J. Haughian	80C
L. Pittenger	L-541	K. Lou	80C
R. Stone	L-541	D. Peterson	930
L. Valby	L-541	D. Roth	80C
R. Wood	L-541		

PENNWALT CORPORATION
EQUIPMENT • CHEMICALS • HEALTH PRODUCTS

CVI CORPORATION A PENNWALT SUBSIDIARY
P. O. BOX 2138, COLUMBUS, OHIO 43216 • (614) 876-7381 TELEX 245-383

March 9, 1979

University of California
Lawrence Berkeley Laboratory
1 Cyclotron Road
Berkeley, CA 94720

Attention: Mr. D. Peterson

Subject: Helium Dewar Trunnion Drawings

Reference: Purchase Order 4746002

Gentlemen:

Regarding your request for Proprietary Trunnion Drawings for the Main Helium Dewar assembly, CVI has furnished LBL with one (1) copy and one (1) reproducible sepia of all "As Built" Drawings for the Main Dewar Assembly including installation of the Trunnion Assembly as shown on LBL Drawing 77-113510-00 (CVI Drawing B866-5801).

At the time CVI suggested the change to reduce the Heat Leak on the Dewar, LBL was advised that detail design and fabrication drawings would not be provided by CVI. However, to assist you in supplying PPL with an assembly picture of the Trunnion we are supplying five (5) copies of CVI Drawing B866-5897 Trunnion Installation stamped Proprietary and with the U.S. Patent identification number displayed. This drawing may be used for information and evaluation only by LBL, PPL and the U.S. Government and may not be disclosed or reproduced for any other purpose.

In the interest of keeping this project on schedule, CVI delivered a complete set of changed drawings on November 6, 1978 to the LBL Project Engineer for approval. To date this approval has not been forwarded to CVI, however, we have proceeded with fabrication and delivery of the first unit requiring expediting of the material and expenditure of considerable fabrication overtime effort in order to provide LBL with the earliest possible delivery date.

If there are any further questions on the Trunnion assembly, we will be glad to discuss these with LBL or PPL personnel.

Very truly yours,

CVI CORPORATION

W. H. Jaeger
Manager, Special Equipment
and Systems

WHJ/mh

Enclosure:

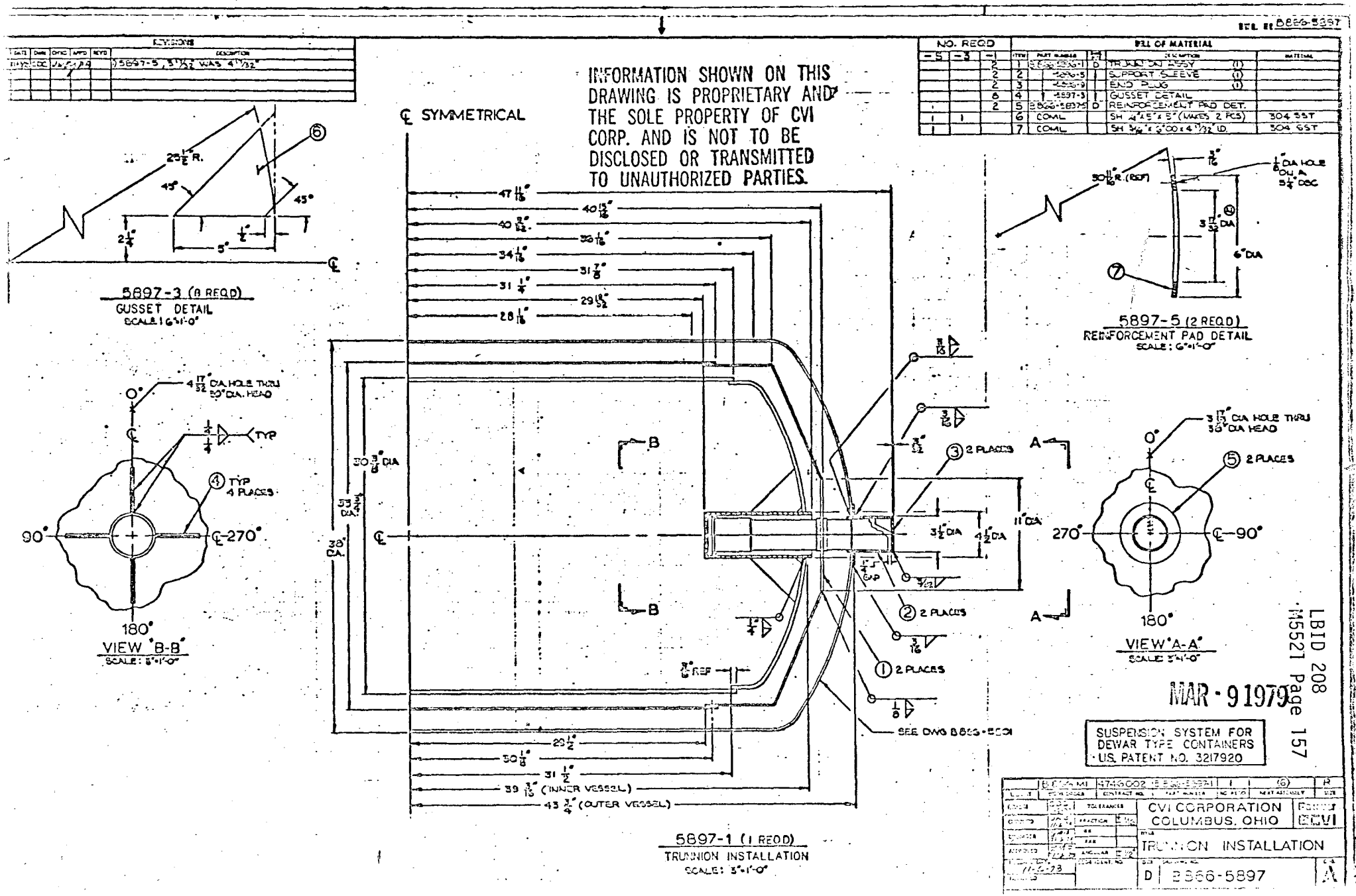
REVISIONS
DESCRIPTION
5897-5, 5 1/32 WAS 4 1/32
INFORMATION SHOWN ON THIS DRAWING IS PROPRIETARY AND THE SOLE PROPERTY OF CVI CORP. AND IS NOT TO BE DISCLOSED OR TRANSMITTED TO UNAUTHORIZED PARTIES.
NO. REQD
BILL OF MATERIAL
TRUNNION SUB ASSY
SUPPORT SLEEVE
END PLUG
GUSSET DETAIL
REINFORCEMENT PAD DET.
SH 4"x5"x5" (MAKES 2 PCS)
SH 3/16"x2'00x4 1/32" ID.
304 SST
304 SST
℄ SYMMETRICAL
5897-3 (8 REQD)
GUSSET DETAIL
SCALE: 6"=1'-0"
5897-5 (2 REQD)
REINFORCEMENT PAD DETAIL
SCALE: 6"=1'-0"
VIEW "B-B"
SCALE: 3"=1'-0"
VIEW "A-A"
SCALE: 3"=1'-0"
2 PLACES
SEE DWG B866-5001
5897-1 (1 REQD)
TRUNNION INSTALLATION
SCALE: 3"=1'-0"
MAR - 9 1979
SUSPENSION SYSTEM FOR DEWAR TYPE CONTAINERS
U.S. PATENT NO. 3217920
CVI CORPORATION
COLUMBUS, OHIO
TRUNNION INSTALLATION
D
B866-5897
LBID 208
M5521 Page 157

Interdepartmental letterhead

Mail Station L- 541

Ext. 29914

NTFD #3150

April 12, 1979

M E M O R A N D U M

TO: Distribution

FROM: Reginald D. Wood

SUBJECT: Neutral Beam Line - NBSTF Helium Dewar-Lower Socket Tracing Transfer - 4959-23

- -

The following drawings have been finalized for custodial transfer to LBL. As in the past, transfer will be made under conditions specified in memorandum NTFD #3070, dated July 12, 1978.

1) AAA77-108345-00
2) AAA77-108347-00
3) AAA77-108348-00
4) AAA77-108349-00
5) AAA77-111002-00
6) AAA77-111221-00
7) AAA77-111222-00

The above list of drawings is a complete list pertaining to the Helium Dewar-Lower Socket.

Please refer all questions to Lee Pittenger, x-29909 or Reg Wood, x-29914.

Reginald D. Wood
Neutral Beam Group

RDW/da

Distribution:

LLL		LBL	
C. Bishop	L-129	W. Cooper	16
B. Denhoy	L-541	J. Haughian	80C
L. Pittenger	L-541	K. Lou	80C
R. Stone	L-541	D. Peterson	930
L. Valby	L-541	D. Roth	80C
R. Wood	L-541		

Interdepartmental letterhead

Mail Station L- 541

Ext. 29914

NTFD #3151

April 12, 1979

M E M O R A N D U M

TO: Distribution

FROM: Reginald D. Wood

SUBJECT: Neutral Beam Line - NBSTF Helium Dewar-Support
Tracing Transfer - 4959-23

- -

The following drawings have been finalized for custodial transfer to LBL. As in the past, transfer will be made under conditions specified in memorandum NTFD #3070, dated July 12, 1978.

1) AAA77-111244-00
2) AAA77-111245-00
3) AAA77-111246-00
4) AAA78-103988-00

The above list of drawings is a complete list pertaining to the Helium Dewar-Support.

Please refer all questions to Lee Pittenger, x-29909 or Reg Wood, x-29914.

Reginald D. Wood
Neutral Beam Group

RDW/da

Distribution:

LLL		LBL	
C. Bishop	L-129	W. Cooper	16
B. Denhoy	L-541	J. Haughian	80C
L. Pittenger	L-541	K. Lou	80C
R. Stone	L-541	D. Peterson	930
L. Valby	L-541	D. Roth	80C
R. Wood	L-541		

Interdepartmental letterhead

LBID 208
M5521 Page 160

Mail Station L- 541

NTFD #3152

Ext: 29914

April 12, 1979

M E M O R A N D U M

TO: Distribution

FROM: Reginald D. Wood

SUBJECT: Neutral Beam Line - NBSTF Helium Dewar-Valve Ass'y Tracing Transfer - 4959-23

- -

The following drawings have been finalized for custodial transfer to LBL. As in the past, transfer will be made under conditions specified in memorandum NTFD #3070, dated July 12, 1978.

1) AAA77-111027-00
2) AAA77-111212-00
3) AAA78-117871-00
4) AAA78-117872-00
5) AAA78-117873-00
6) AAA78-117874-00
7) AAA78-117875-00
8) AAA78-117876-00
9) AAA78-117877-00
10) AAA78-117878-00
11) AAA78-117879-00

The above list of drawings is a complete list pertaining to the Helium Dewar-Valve Ass'y.

Please refer all questions to Lee Pittenger, x-29909 or Reg Wood, x-29914.

Reginald D. Wood
Neutral Beam Group

RDW/da

Distribution:

LLL		LBL	
C. Bishop	L-129	W. Cooper	16
B. Denhoy	L-541	J. Haughian	80C
L. Pittenger	L-541	K. Lou	80C
R. Stone	L-541	D. Peterson	930
L. Valby	L-541	D. Roth	80C
R. Wood	L-541		

University of California
LAWRENCE LIVERMORE LABORATORY

Interdepartmental letterhead

Mail Station L- 541

Ext: 29914

NTFD #3156

April 20, 1979

M E M O R A N D U M

TO: Distribution

FROM: Reginald D. Wood

SUBJECT: Neutral Beam Line - NBSTF Helium Dewar Valving Tracing Transfer - 2959-23

- -

The following drawings have been finalized for custodial transfer to LBL. As in the past, transfer will be made under conditions specified in memorandum NTFD #3070, dated July 12, 1978.

1)	77-111003-00	11)	77-111676-0A
2)	77-111004-00	12)	78-110478-00
3)	77-111005-00	13)	78-110479-00
4)	77-111006-00	14)	78-110480-00
5)	77-111203-0A	15)	78-110481-00
6)	77-111213-00	16)	78-111368-00
7)	77-111214-00	17)	78-119278-0A
8)	77-111215-00	18)	78-119279-0A
9)	77-111216-0A	19)	78-119709-00
10)	77-111674-00	20)	78-119715-00
		21)	78-119716-00

The above list of drawings is a completed list pertaining to the Helium Dewar Valving.

It should be noted that the following drawings, while part of the Helium Dewar Valving, are common to other ass'ys and have been previously transferred:

1) 77-111205-0B - See NTFD #3149
2) 77-111207-0A - See NTFD #3149
3) 78-117875-00 - See NTFD #3152

Please refer all questions to Lee Pittenger, x-29909 or Reg Wood, x-29914.

Reginald D. Wood
Neutral Beam Group

RDW/da

Distribution:

LLL		LBL	
C. Bishop	L-129	W. Cooper	16
B. Denhoy	L-541	J. Haughian	80C
L. Pittenger	L-541	K. Lou	80C
R. Stone	L-541	D. Peterson	930
L. Valby	L-541	D. Roth	80C
R. Wood	L-541		

Interdepartmental letterhead

Mail Station L- 541

Ext: 29914

NTFD #3158

April 24, 1979

M E M O R A N D U M

TO: Distribution

FROM: Reginald D. Wood

SUBJECT: Neutral Beam Line - NBSTF LN_2 Manifold Ass'y Tracing Transfer - 4959-23

- -

The following drawings have been finalized for custodial transfer to LBL. As in the past, transfer will be made under conditions specified in memorandum NTFD #3070, dated July 12, 1978.

1) 77-111659-00
2) 77-111677-00
3) 77-111680-00
4) 77-111681-00
5) 77-111721-0A (3 sheets)

The above list of drawings is a complete list pertaining to the LN_2 Manifold Ass'y.

Note that the following drawings, while part of the LN_2 Manifold Ass'y, are common to other assemblies and have been previously transferred:

1) 77-108336-0E - See NTFD #3126
2) 77-111678-0A - See NTFD #3070
3) 77-111679-0B - See NTFD #3070

It should also be noted that final revisions of our drawings do not reflect "as built update" revisions supplied by CVI Corp. "As built" sepias received from CVI Corp. will be forwarded to LBL for review. LBL will assume responsibility for "as built update" revisions to original tracings as required.

Please refer all questions to Lee Pittenger, x-29909 or Reg Wood, x-29914.

Reginald D. Wood
Neutral Beam Group

RDW/da

Distribution:

LLL		LBL	
C. Bishop	L-129	W. Cooper	16
B. Denhoy	L-541	J. Haughian	80C
L. Pittenger	L-541	K. Lou	80C
R. Stone	L-541	D. Peterson	930
L. Valby	L-541	D. Roth	80C
R. Wood	L-541		