LBID 228 c.1
UC-38

Lawrence Berkeley Laboratory
UNIVERSITY OF CALIFORNIA

Engineering & Technical Services Division

RECEIVED
LAWRENCE
BERKELEY LABORATORY

JUL 21 1980

LIBRARY AND
DOCUMENTS SECTION

For Reference

Not to be taken from this room

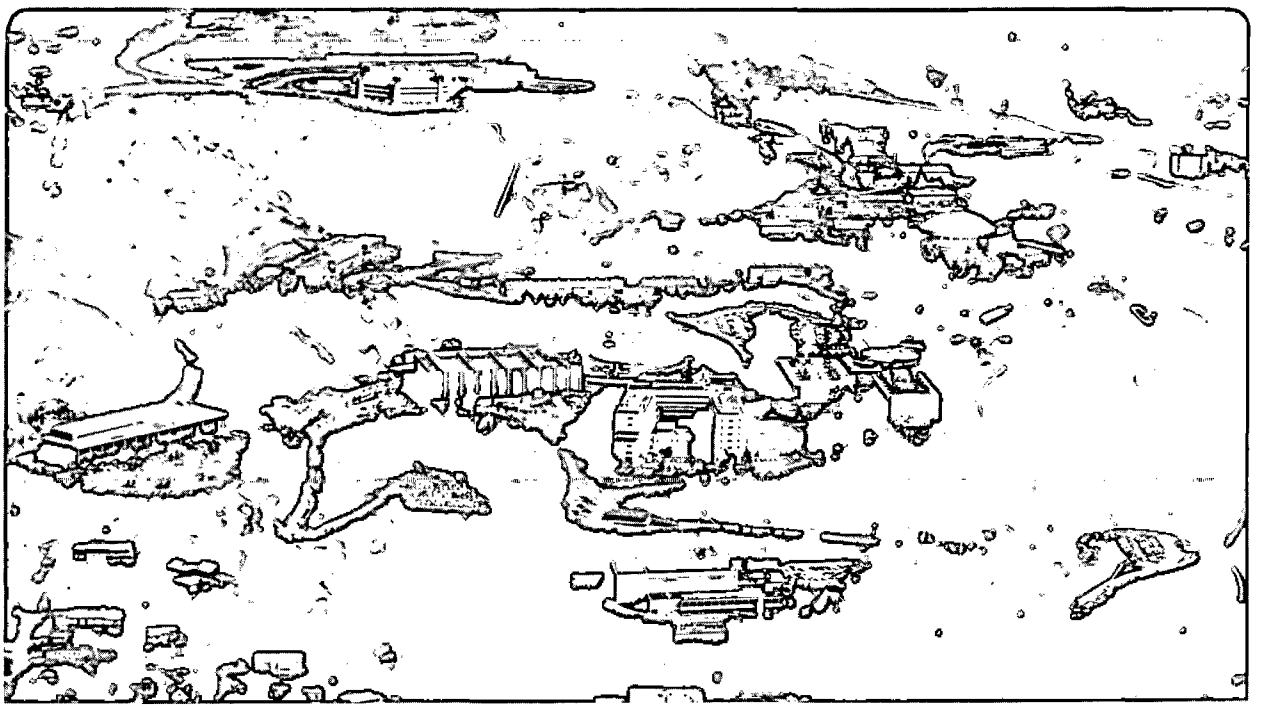

LBID 228 c.1

DISCLAIMER

This document was prepared as an account of work sponsored by the United States Government. While this document is believed to contain correct information, neither the United States Government nor any agency thereof, nor the Regents of the University of California, nor any of their employees, makes any warranty, express or implied, or assumes any legal responsibility for the accuracy, completeness, or usefulness of any information, apparatus, product, or process disclosed, or represents that its use would not infringe privately owned rights. Reference herein to any specific commercial product, process, or service by its trade name, trademark, manufacturer, or otherwise, does not necessarily constitute or imply its endorsement, recommendation, or favoring by the United States Government or any agency thereof, or the Regents of the University of California. The views and opinions of authors expressed herein do not necessarily state or reflect those of the United States Government or any agency thereof or the Regents of the University of California.

LAWRENCE BERKELEY LABORATORY - UNIVERSITY OF CALIFORNIA

ENGINEERING NOTE

CODE	SERIAL	PAGE
ESO 510	M4906	1 OF 11

AUTHOR	DEPARTMENT	LOCATION	DATE
R. Byrns	Mechanical Engineering	Berkeley	18 February 1976

PROGRAM — PROJECT — JOB

ESCAR

REFRIGERATION SYSTEM

TITLE

OIL REMOVAL SYSTEM DESIGN

PROBLEM:

. To design an absolute oil removal system for the ESCAR 1500 watt helium refrigeration compressors, for flow of 3000 SCFM at 18-20 atm, pressure drop and costs are to be minimized; service life 7000 hours.

FIRST APPROACH:

Design by standard procedures using empirical data for fiberglass filters, and sorbates.

Pressure drop data for air at 1 atm is corrected to Δp for He at 18 atm by density ratios applied to:

$$\Delta P = f \frac{L}{D} \rho \frac{V^2}{2g} \qquad \frac{\Delta P_{air-1atm}}{\Delta P_{He-18}} \simeq \frac{\rho_{air-1}}{\rho_{He-18}} \simeq 3$$

Filter collection effeciency is assumed equal for all cases in the first approximation. If diffusion effects are predominant then possibly the diffusion equation may apply.

$$N_A = -D \frac{\partial c}{\partial s}$$ ... page 538, "Chem. Eng. Handbook", 3rd Ed. 1950

N_A = lb-moles of component A diffusing per hr. ft.^{2}

$\frac{\partial c}{\partial s}$ = c, concentration, lb-moles/ft.^{2}
s, distance, ft.

D = diffusion coefficient - ft.^{2}/hr. or cm^2/sec.

$$= K \frac{T^{3/2}}{P\left(\gamma_a^{1/3} + \gamma_b^{1/3}\right)} \cdot \sqrt{\frac{1}{M_1} + \frac{1}{M_2}}$$

M = mol. wts. of gases
γ = mol. vol. @ n.b.p.
P = pressure, atm
T = temp., ^{o}K.

At first glance, the P factor is predominant and for diffusion effects:

$$\frac{D_{He\ @\ 20\ atm}}{D_{air\ @\ 1\ atm}} \simeq \frac{P_{air}}{P_{He}} \simeq \frac{1}{20}$$

or efficiency data for 1 atm air is 20 times better than He at 20 atm.

However, intuitively the coalescing process is improved by lowering the temperature. The particle mobility is slowed so that the sticking factor is better?

$$\text{Then: } \frac{D_{He}}{D_{air}} \simeq \frac{P_{air}}{P_{He}} \left(\frac{T_{He}}{T_{air}} \right)^{3/2}$$

and lowering the temperature and raising the pressure should improve the coalescence.

First approach design is discussed further in:

EN 4313-03 M51 "72" Bubble Chamber Aerosol Removal"-R. Byrns, Nov. 1960.

M 4903 "ESCAR Refrigeration System Fiberglass Filter Design," S. Mitina, Feb., 1976.

M 4904 "ESCAR Refrigeration System Charcoal Adsorbant Design," S. Mitina, Feb., 1976.

SECOND APPROACH:

Use as a model a commercial helium compressor package. This consists of a two-stage reciprocating Freon compressor modified for helium with full oil injection as coolant and lubricant, and an absolute oil removal system. The oil injection provides an approach to isothermal compression and permits high compression ratios per stage. The oil used was a synthetic, polyalkalene glycol, UCON-LB-400-X. The X series contains a standard aromatic amine antioxidant, amyl aldehyde, which easily passed thru the system charcoal adsorbant. It then stopped in the low-temperature internal purifiers and was later released (chromatographic) to stop in the expander engine valves. The "X" additive is no longer purchased and only LB-400 is used. Otherwise the oil removal system works well for continuous periods up to 8000 hours.

The model flow is 60 SCFM (4.6gm/sec) first stage pressure $\simeq$ 30 psig; second stage $\simeq$ 235 psig, and oil pump pressure 60 psig. Pressure drop from second stage discharge to the exit of the oil removal system is $\simeq$ 10 psig.

The oil removal system consists of an aftercooler, float trap, bulk oil separator, demistifier and adsorber. Estimated removal and ΔP are shown in Fig. 1. page 8

Model flow is 60 SCFM at 15-18 atm. Our prototype flow is 3000 SCFM at 17-20 atm

$$\therefore \text{ Scale Factor (S.F.)} = \frac{3000}{60} = 50.$$

By first approximation we could put 50 of the model units in parallel for a satisfactory solution, (or use the same superficial velocity and bed depths.)

Our prototype compressor will be vendor supplied with a bulk oil separator of three stages, a 30" dia. tank for initial liquid/gas gravity separation, a metallic mesh disentrainer, and a fiber filter with exit delivery approaching 200-300 ppm.

COALESCER:

A coalescer stage is needed. The model (Fig. 2) internals are unknown but assumed to be fiberglass.

D_m, diameter of model, is 8"

$$\text{Model } V_s = \frac{Q}{A} = \frac{60 \text{ SCFM}}{\frac{\pi}{4}\left(\frac{8}{12}\right)^2 17 \text{ atm}} = \frac{3.55 \text{ ACFM}}{.348 \text{ ft.}^2} = 10.2 \text{ ft./min.}$$

$$\text{Prototype } V_s = 10 \text{ ft./min.} = \frac{3000}{18 \cdot A} \; ; \; A = 16.7 \text{ ft.}^2 = \frac{\pi}{4} D_p^2 \; ;$$

$$D_p = 4.65 \text{ ft.} = 56''$$

First approximation is a pressure vessel of 56" dia. with stages of fiberglass.

Other geometries can be used to obtain A $\sim$ 16 ft.^{2} with a smaller, more economical pressure vessel, such as Pall reverse "Ulti-Por" multiple units of $\sim$5 ft.^{2} each. (OR HANKINSON "AEROLESCER") OR BALSTON. COALESCER

CHARCOAL ADSORBER. (Figure 3) page 9

Model diameter is 6" contact time, $t = \frac{2 \text{ ft}}{18 \text{ ft/min}} \cdot \frac{60 \text{ sec}}{\text{m}} = 6.7 \text{ sec.}$

$$\text{Model } V_s = \frac{60}{\frac{\pi}{4}\left(\frac{6}{12}\right)^2 17 \text{ atm}} = \frac{3.55}{\frac{\pi}{16}} = 18.1 \text{ ft.}^2/\text{min.}$$

$$\text{Prototype } V_s = 18.1 = \frac{3000}{A \cdot 18 \text{ atm}} \; ; \; A = 9.26 \text{ ft.}^2 = \frac{\pi}{4} D_p^2 \; ;$$

$$D_p = 3.28 \text{ ft.} = 39.4''$$

Model charcoal bed depth is $\sim$ 24"; make prototype depth also 24" (2 ft.)

Prototype charcoal volume V = Aℓ = (9.3)(2) = 18.6 ft.^{3}

Charcoal density (# JXC - 6 to 8 mesh); cost $\sim$\$1.00 per lb.)

Barnebey Cheney

.45 - .51 gm/cc $\sim$ 32 lb./ft.^{3}

Adsorber charge $\sim$ 32 (18.6) = $\boxed{596 \text{ lbs.}}$

Model service life recommended is 3500 hr.; (actual service life 7000 - 8000 hr.)

With He flow of 3000 SCFM for 7000 hr.; $\sum$ flow is $3000 \frac{\text{ft.}^3}{\text{min}} \cdot 60 \frac{\text{m}}{\text{hr}} \cdot 7000 \text{ hr}$

$$= 126 \times 10^7 \text{ ft.}^3 \left(.0111 \frac{\text{lbs}}{\text{ft}^3} \text{ @ } 0^\circ\text{C, 1 atm} \right) = 13 \times 10^6 \text{ lbs.}$$

$$\left(.0103 \frac{\text{lbs}}{\text{ft}^3} \text{ @ } 70^\circ\text{C, 1 atm} \right)$$

If oil impurity is 1 ppm by weight, we need to adsorb 13 lbs of oil.

If oil is 1 ppm by volume, He volume is $\frac{126 \times 10^7}{18 \text{ atm}} = 7 \times 10^7 \text{ ft.}^3$

We need to adsorb 70 ft.^{3} of oil vapor.

If oil vapor density is 0.2 - 0.4 lb./ft.^{3}, we need to absorb 14-28 lbs oil.

If charcoal absorbs 10-15% of its weight in oil vapor before break-through, then 600 lbs. of charcoal sorbs 60-90 lbs. of oil and we have adequate safety factor.

PRESSURE DROP THRU CHARCOAL.

$\Delta P = DL (K_1 \mu V + K_2 \rho V^2)$ .... see page 5

D = bed density (30 lbs./ft.^{3}) $K_1 = 7.05$

L = bed depth (2 ft.) $K_2 = 2.12$

μ = viscosity, 200×10^{-6} pose = .02 centipose

ρ = density at 18 atm = 0.198 lbs./ft.^{3}

V_s = superficial velocity (100 fpm) = 0.18 ft./min.

$\Delta P = 30 (2) [7.05 (.02) (0.18) + 2.12 (0.198) (.0325)] = 60 [.0254 + .137] =$

$= 60 (0.162) =$

$\Delta P = 9.72$ inches of H_2O

MAXIMUM ALLOWABLE VELOCITY (to prevent bed destruction)

$G^2 = .0167 \, d_g \, d_a \, Dg$ see page 5

d_g = gas density; 0.198 lbs./ft.^{3} D = av. particle diam., $\frac{0.125 \text{ in}}{12} = .010$ ft.

d_a = bed density, 30 lbs./ft.^{3} g = 32.2 ft./sec.^{2}

$G^2 = (0.0167) (0.198) (30) (.010) (32.2) = 0.032 = 3.2 \times 10^{-2}$

$G_{max} = 1.79 \times 10^{-1} = \underline{0.179 \text{ lbs./sec. ft.}^2}$

Our flow is $3000 \frac{\text{s ft.}^3}{\text{min}} \left(0.0103 \frac{\text{lbs}}{\text{ft.}^3}\right) = 30 \frac{\text{lbs}}{\text{min}} \frac{\text{min}}{60 \text{ sec.}} = 0.5 \frac{\text{lb}}{\text{sec}}$ [230 gm/sec]

$G = \frac{0.5 \text{ lbs./sec.}}{A} = \frac{0.5}{9.26 \text{ ft.}^2} = .054 \frac{\text{lbs}}{\text{sec. ft.}^2}$

$.054 < 0.179$ ∴ OK for bed protection

R. Byrns ED. NOTE

ESO 510

COLUMBIA *Activated Carbon*

TRADE-MARK

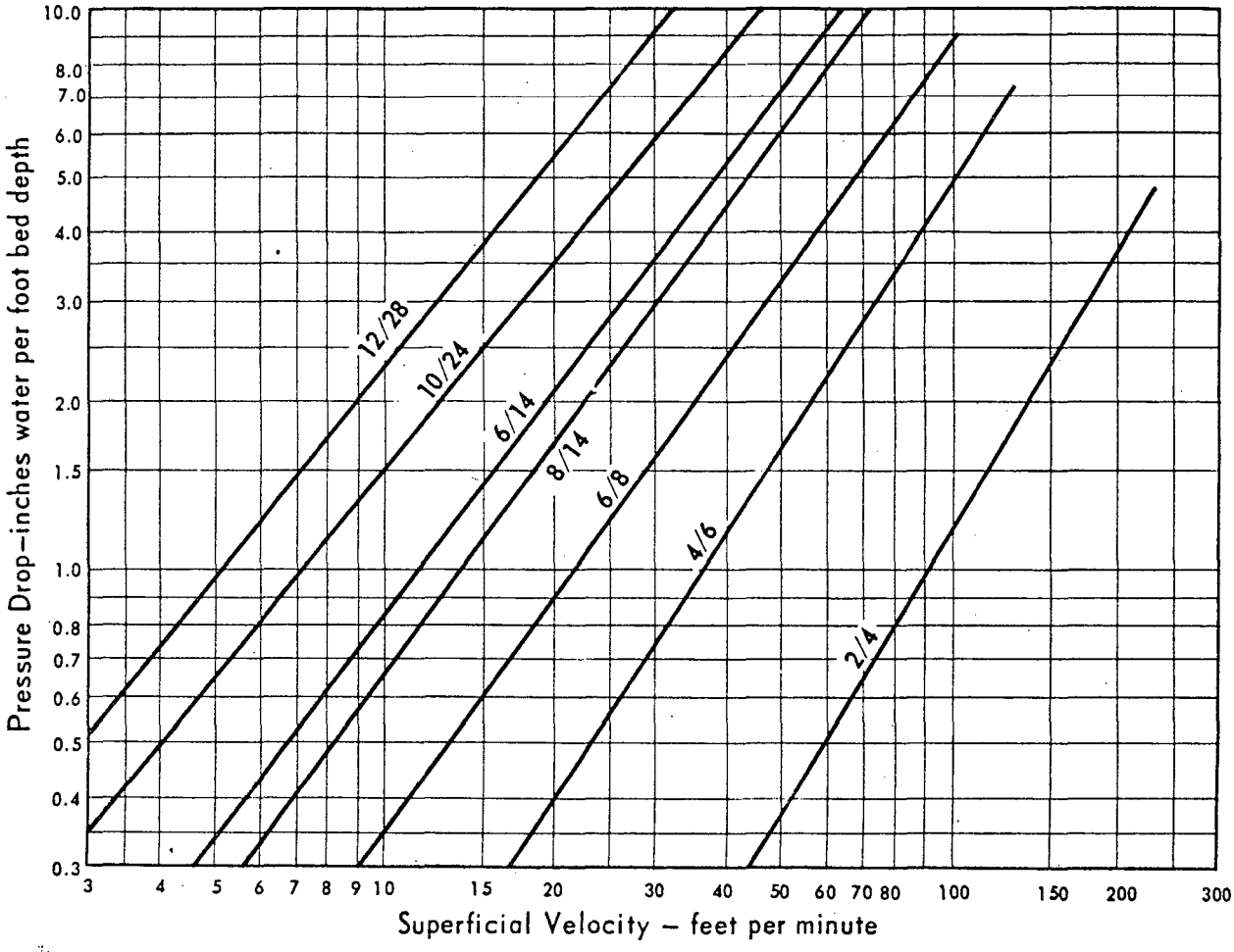

Resistance of Dry Packed Granular Beds to Air Flowing Downward

(1 Atm. pressure and 70°F)

GENERAL EQUATION FOR PRESSURE DROP FOR ANY FLUID THRU A PACKED GRANULAR BED:

$$\frac{P}{DL} = K_1 \mu V + K_2 \rho V^2$$

P = Pressure drop (inches water)
D = Bed density (lbs /ft ^{3})
μ = Fluid viscosity (centipose)
ρ = Fluid density (lbs /ft ^{3})
V = Superficial fluid velocity (100 fpm)
L = Bed depth (ft)

Reference: Fluid Flow Through Packed Columns Chem. Eng. Progress Vol. 48; No. 2, Pg. 89, February, 1952

Carbon Size (Tyler)	*K_1	*K_2
2/4	1.055	0.282
4/6	3.33	1.33
6/8	7.05	2.12
8/14	12.8	4.04
6/14	15.8	4.12

*Based on P for air at 1 atm. and 70°F.

MAXIMUM ALLOWABLE GAS VELOCITY TO PREVENT DESTRUCTION OF ACTIVATED CARBON BED:

$$\frac{G^2}{d_g\, d_a\, D\, g} = 0.0167$$

G = Maximum mass velocity (lbs /sec ft ^{2})
d_g = Density of gas (lbs /ft ^{3})
d_a = Density, packed bed (lbs /ft ^{3})
D = Average particle diameter (ft)
g = Gravitational constant (32.2 ft /sec ^{2})

Reference: Avoiding Destructive Velocity through Adsorbent Beds. Ledoux Chem. Eng. March, 1948.

Telephone Contacts
Chicago, Ill. (312) 822-7000 • Los Angeles, Calif. (213) 583-3061 • New York, N.Y. (212) 551-2345
Pittsburgh, Pa. (412) 922-5700 • San Francisco, Calif. (415) 765-1000

"Columbia" is a registered trade mark of

UNION CARBIDE
UNION CARBIDE CORPORATION
CARBON PRODUCTS DIVISION
270 PARK AVENUE, NEW YORK, N.Y. 10017
Export: International Department, New York
In Canada: Union Carbide Canada Limited, Toronto

Form CP-3147 Rev. 1
1.5M 5-73

Litho in U.S.A.

CARBON ADSORBANTS:

Further information by phone 23 Feb. 1976, from Blaine Joyce
Technical Sales
Union Carbide Corp.
Cleveland, Ohio, 45433

FTS-293-3131 216-433-8600, X 794

"Carbon absorbs oil only, no H_2O. In toluene extraction, the carbon absorbs toluene, excess steam is used to take out the toluene @ 600°F (temperature desorb cycle) and then toluene displaces the residual H_2O on the sorbtion cycle. Heavy hydrocarbons will displace H_2O in carbon.

SiO_2 or Al_2O_3 will load with H_2O if there is any H_2O present and not absorb oil. These sorbants thus are not good for oil.

The U.C.C. JXC/608 mesh will sorb 3 lbs. oil per 100 lbs. charcoal (3% wt./wt.) below 100°F and 0.5% up to 300°F.

For air compressor design, use 1.3 lb. oil per 10^6 SCF, lube compressor output, 60% is in droplets, remove mechanically with filter; 40% is vapor, use charcoal.

The charcoal can be regenerated with steam or hot gas at 600°F. Flushing gas is needed to sweep. Use pellets as they are harder (not granular) design below critical velocities to prevent dusting and break-up due to vibration. Granules are subject to break-up leading to local channeling and higher local critical velocities."

See U.C.C. design data for procedures.

Westvaco Chemical, Covington, VA, does not have data on oil removal but anticipates a 10% to 15% loading on all of their granular "Nuchar" carton grades." Price for WV-H 4x8 was $0.78 per lb. in 150 lb. drums (Nov. 1974)

NOTES ON CHARCOAL FROM WESTVACO CHEM. DIV. COVINGTON, VA. 24426
"NUCHAR" CATALOG.

Because of its incredibly porous structure, activated carbon has a singular ability to adsorb materials from gases and liquids. Each particle holds a vast interconnecting network of many-sized pores. This provides a very large surface area for adsorption of molecules.

Almost always, adsorption on activated carbon is the result of so called "van der Waals," or "dispersion," forces. This is physical adsorption. These forces exist among all molecules or atoms, whether or not they are chemically combined. The same forces are primarily responsible for the condensation or liquefaction of vapors. The forces of attraction which a particle of activated carbon exerts upon molecules in its vicinity may be compared to the gravitational forces the earth exerts upon objects near it. As a rule, molecules with a higher molecular weight experience greater forces of attraction than materials of lower molecular weight. Hence, activated carbons, aside from the effects of molecular screening due to the sizes of the pores, have a preference for higher molecular weight substances.

A particle of activated carbon has associated with it an "atmosphere" of adsorbed molecules in much the same way the earth has a surrounding atmosphere of air. A granule of activated carbon placed in contact with a mixture of gases of various molecular weights will adsorb a mixture of all the gases present. It will adsorb a greater proportion of the higher molecular weight gases, however.

When a granule of activated carbon is placed in contact with a liquid mixture, there is a similar tendency for higher molecular weight substances to be adsorbed. In liquid systems, however, activated carbon tends to "prefer" not only substances of higher molecular weight but also non-polar substances. Thus, there is an affinity for the adsorption of non-polar organic molecules from polar solvents such as water. *Figure 2* represents an enlarged portion of the pore structure showing absorbed molecules (the spheres) within the pores of the carbon particle.

The forces of attraction between the carbon and adsorbate molecules increase directly as the size of the adsorbate molecules approaches the size of the pores. The most tenacious adsorption takes place when the pores are barely large enough to admit the adsorbate molecules. To put it another way: the nearer the pore size to the diameter of the molecules, the greater the attraction.

The pores cannot be so small that the adsorbate molecules cannot enter, or else the adsorptive capacity for those molecules will be greatly reduced. Since adsorbate molecules are physically prohibited from entering pores smaller than those molecules, the size distribution of pores is a critical factor in adsorption. A carbon with pores predominately smaller than the desired adsorbate will have a low capacity for that particular adsorbate. Consequently, the pore structure of activated carbons is extremely important in determining their adsorptive properties.

Although the reasons are not completely understood, it is known that the presence of other elements can have a considerable influence on adsorptive properties of carbon. Particularly important is oxygen, which can exist in a variety of chemically combined forms with the atoms on the particle surfaces. These oxygen groups appear to increase the adsorptivity of the carbon for polar compounds. In some circumstances the inorganic "ash" portion of an activated carbon can also be important in determining adsorptive properties.

FIG. 1 BELOW IS FROM "LINDE" MOL. SIEVE CATALOG.

Figure 1: Molecular Sieves Have Precisely Sized Pores

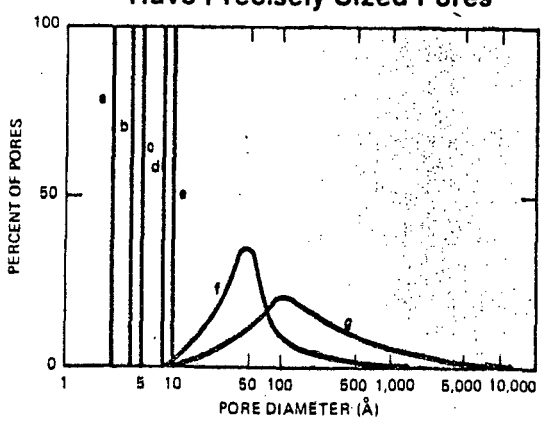

LEGEND:
(a) LINDE MOLECULAR SIEVE TYPE 3A
(b) LINDE MOLECULAR SIEVE TYPE 4A
(c) LINDE MOLECULAR SIEVE TYPE 5A
(d) LINDE MOLECULAR SIEVE TYPE 10X
(e) LINDE MOLECULAR SIEVE TYPE 13X
(f) TYPICAL SILICA GEL
(g) TYPICAL ACTIVATED CARBON

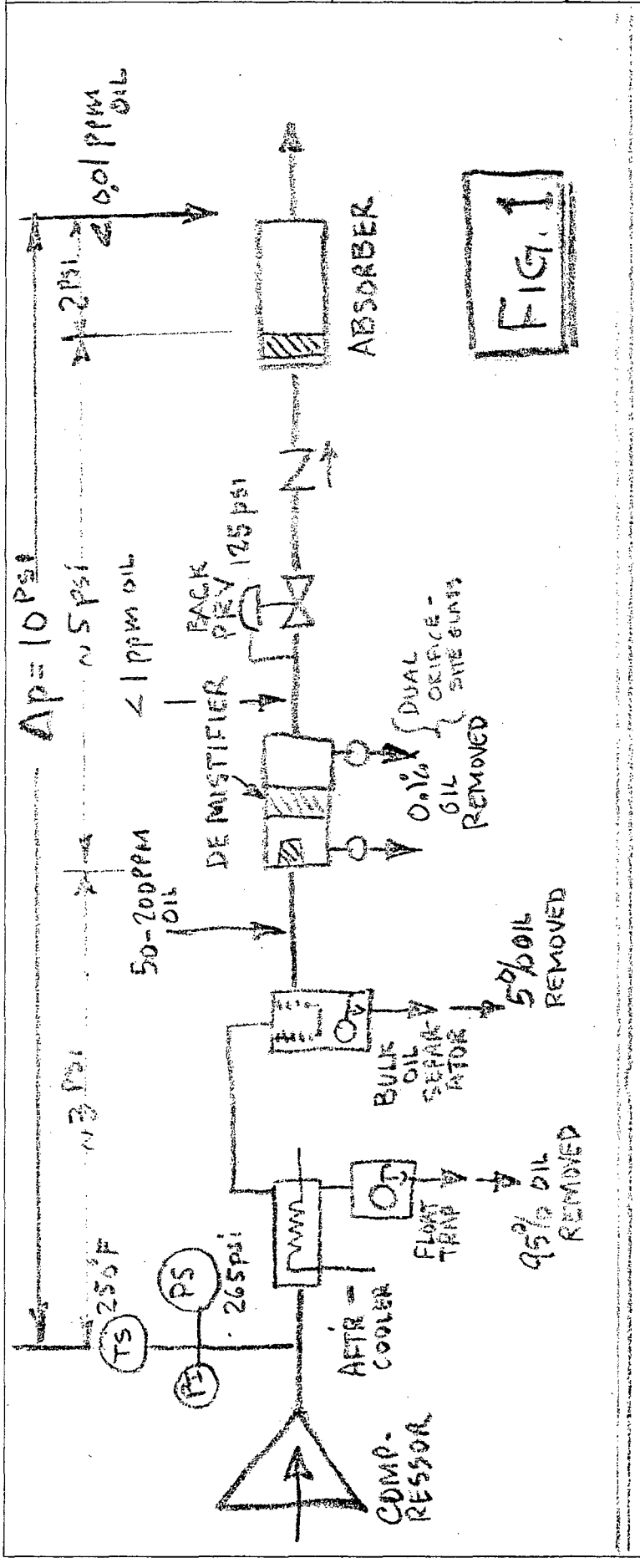
ΔP = 10 PSI
~5 PSI
~3 PSI
2 PSI
0.01 PPM OIL
ABSORBER
FIG. 1
<1 PPM OIL
BACK PRES 125 PSI
DE MISTIFIER
DUAL ORIFICE - SITE GLASS
0.1% OIL REMOVED
50-200 PPM OIL
5% OIL REMOVED
BULK OIL SEPARATOR
95% OIL REMOVED
FLOAT TRAP
AFTER - COOLER
COMPRESSOR
TS
PS
PI
250°F
265 PSI

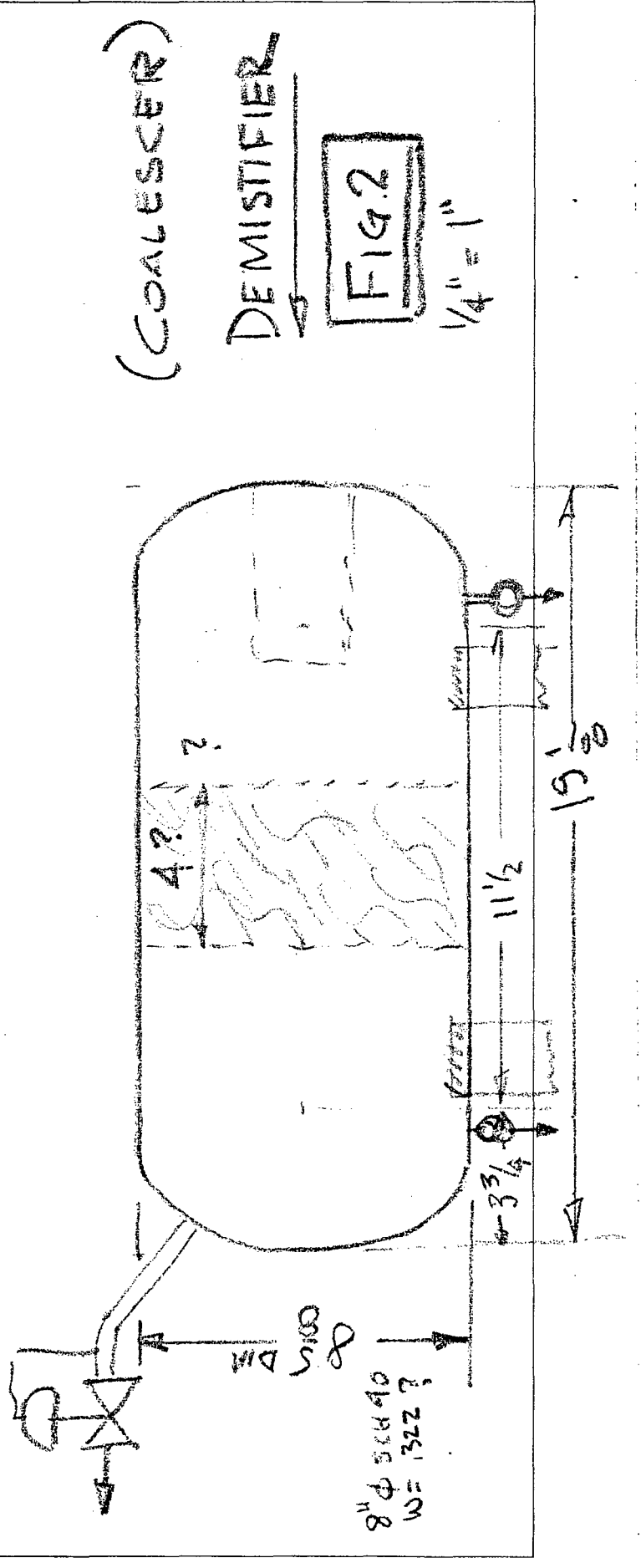
(COALESCER)
DEMISTIFIER
FIG. 2
1/4" = 1"
4?
?
11 1/2
19 1/2
3 1/4
5/8 DIA
8" Φ SCH 40
W = 322 ?

LAWRENCE RADIATION LABORATORY - UNIVERSITY OF CALIFORNIA ENGINEERING NOTE		CODE ES0510	SERIAL M4906	PAGE 9 OF 11
AUTHOR R.B	DEPARTMENT M.E	LOCATION B	DATE 19 Feb 76	

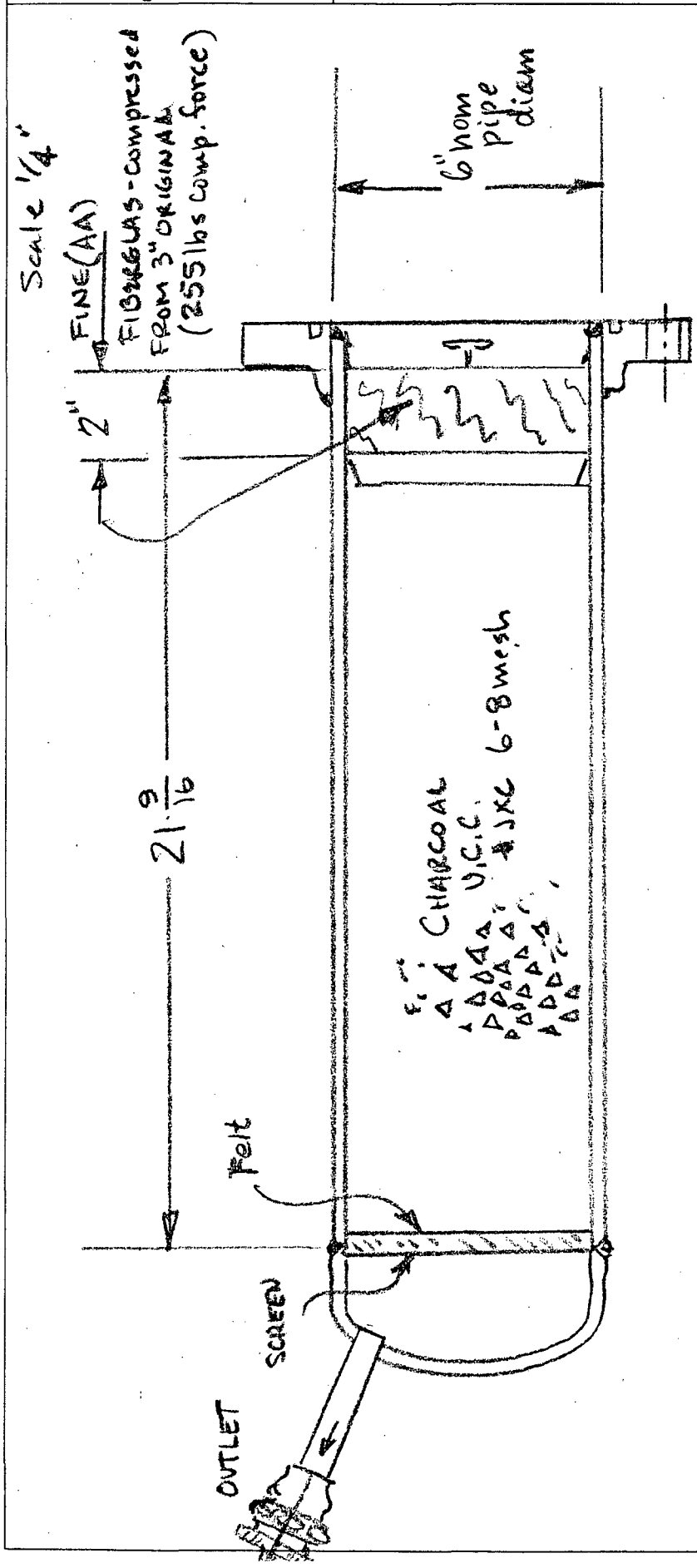

REF Dwg. 18A6764

FIG 3 CHARCOAL ADSORBER

THIS PAGE AND NEXT DESCRIBE OIL REMOVAL SYSTEM FOR A 2-STAGE HERMETIC SCREW COMPRESSOR -- "MYCOM"

FROM A PAPER AT CRYO. ENGR CONF. - KINGSTON - ONT. - JUNE 1975 "NEW TYPE SCREW COMP. FOR HELIUM REFRIG + LIQUEFIERS"

M. ISHIZUKA - SUZUKI SHOKAN CO.

M. INO - MAYEKAWA MFG. CO.

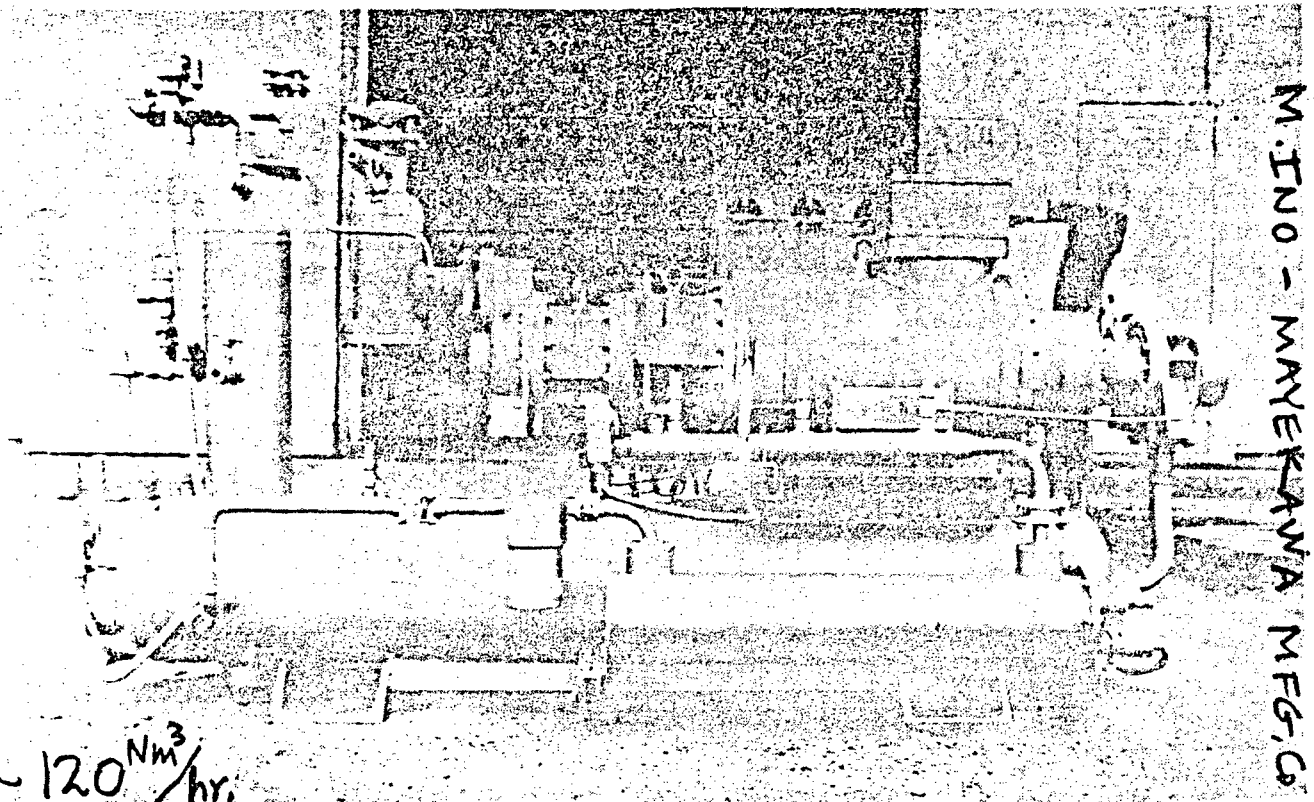

~120 Nm³/hr.
(60 SCFM) HERMETIC TWO-STAGE SCREW COMPRESSOR

Measuring / Sampling Location	Pressure atm		Pressure Drop (Pc - Ps) atm	Oil Content CH_4 Equivalent (ppm)
Compressor Outlet	Pc	17.0		
No.1 Oil Separator Outlet	Ps	16.9	0.1	140
No.4 Oil Separator Outlet	Ps	15.9	1.1	0.1
No.5 Oil Separator Outlet	Ps	15.6	1.4	0.04

OIL CONTENT ANALYSIS BY GAS CHROMATOGRAPHY
RESULTS REPRESENTED BY METHANE EQUIVALENT
OIL USED - "SUNISO" - (MINERAL) REFRIG. GRADE

(ΔP IS TOO HIGH)

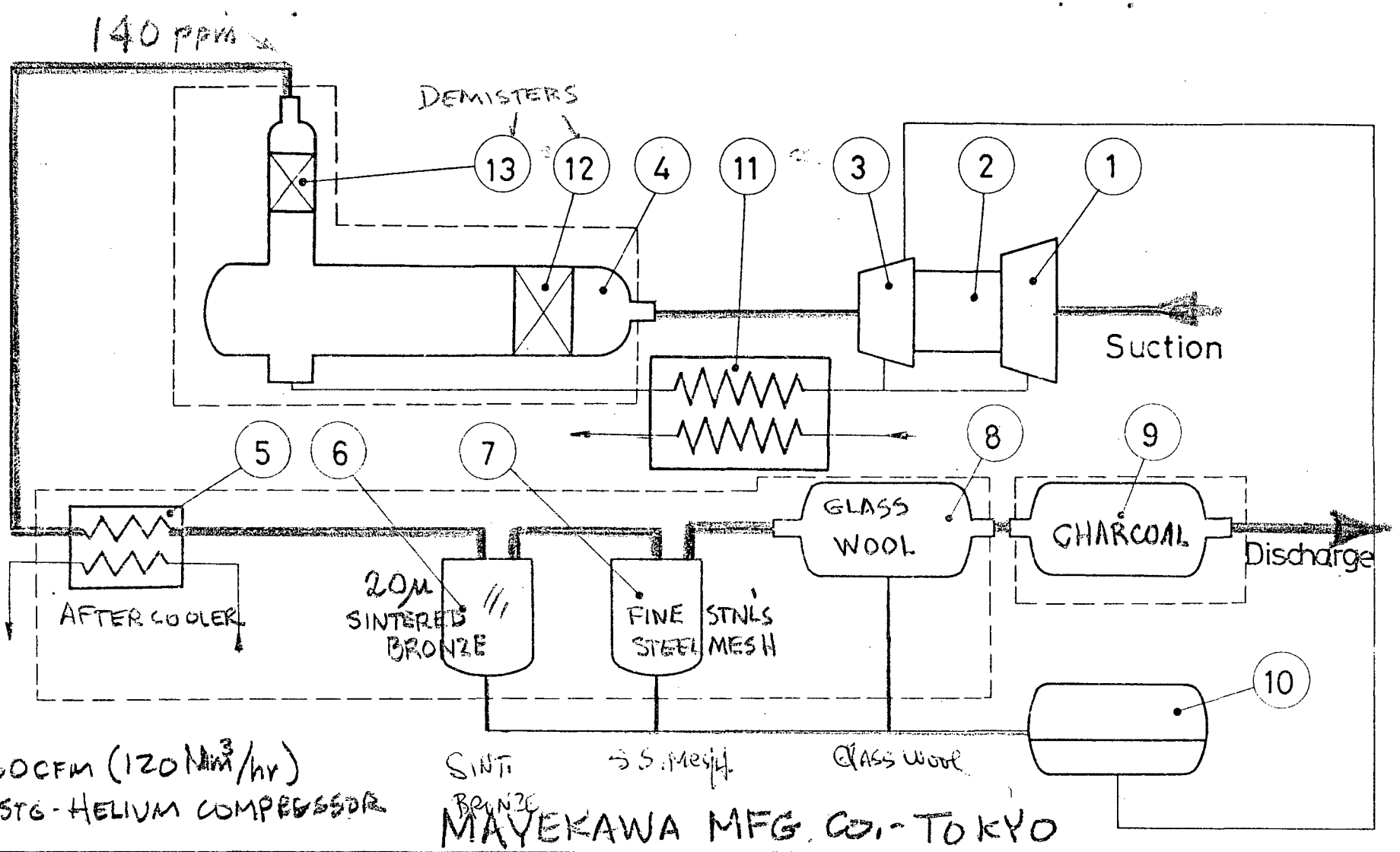

~60CFM (120 Nm³/hr)
2-STG-HELIUM COMPRESSOR

MAYEKAWA MFG. CO.-TOKYO

No.	Part Name	4	No.1 Oil Separator	8	No.4 Oil Separator	12	Demister
1	First Stage	5	Aftercooler	9	No.5 Oil Separator	13	Demister
2	Hermetic Motor	6	No.2 Oil Separator	10	Oil Sump		
3	Second Stage	7	No.3 Oil Separator	11	Oil Cooler		

{No.2 thru No.5
OIL SEPARATOR VESSELS ~ 12"φ x 15-18" Long.

~~Figure~~

This report was done with support from the Department of Energy. Any conclusions or opinions expressed in this report represent solely those of the author(s) and not necessarily those of The Regents of the University of California, the Lawrence Berkeley Laboratory or the Department of Energy.

Reference to a company or product name does not imply approval or recommendation of the product by the University of California or the U.S. Department of Energy to the exclusion of others that may be suitable.

TECHNICAL INFORMATION DEPARTMENT
LAWRENCE BERKELEY LABORATORY
UNIVERSITY OF CALIFORNIA
BERKELEY, CALIFORNIA 94720