LBID 229
UC-38

Lawrence Berkeley Laboratory
UNIVERSITY OF CALIFORNIA

Engineering & Technical Services Division

RECEIVED
LAWRENCE
BERKELEY LABORATORY

JUL 21 1980

LIBRARY AND
DOCUMENTS SECTION

For Reference

Not to be taken from this room

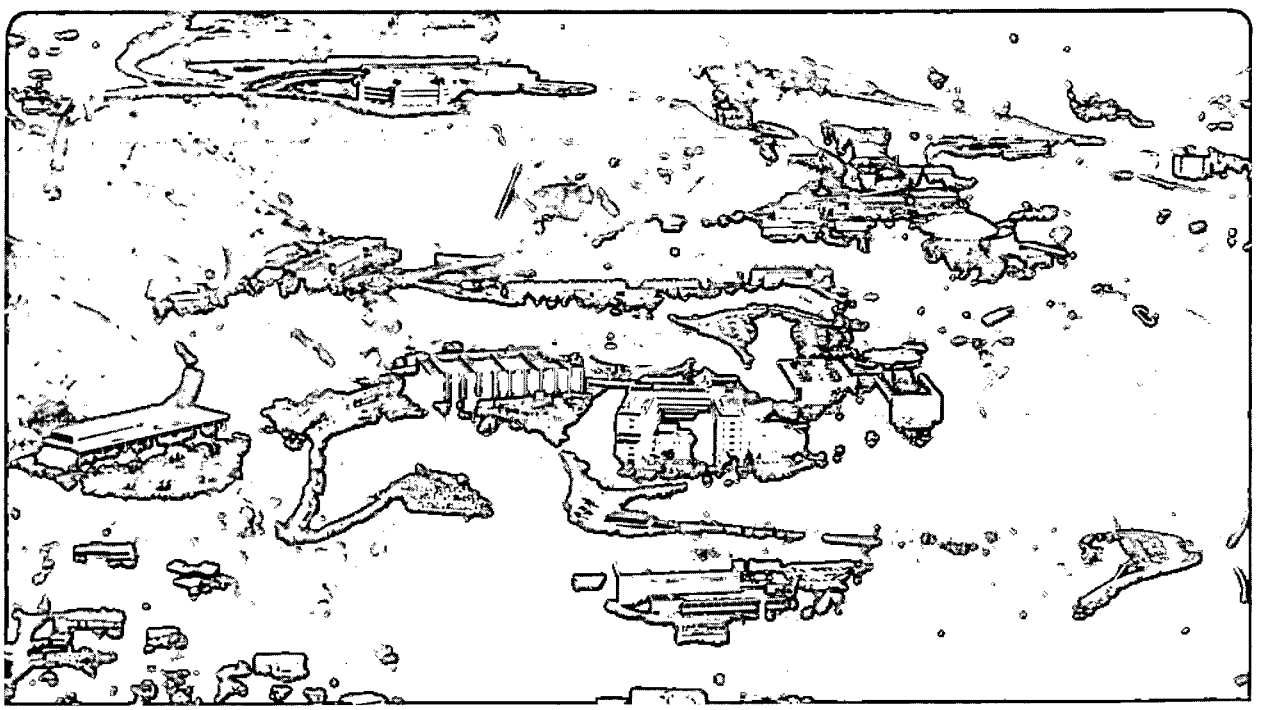

DISCLAIMER

This document was prepared as an account of work sponsored by the United States Government. While this document is believed to contain correct information, neither the United States Government nor any agency thereof, nor the Regents of the University of California, nor any of their employees, makes any warranty, express or implied, or assumes any legal responsibility for the accuracy, completeness, or usefulness of any information, apparatus, product, or process disclosed, or represents that its use would not infringe privately owned rights. Reference herein to any specific commercial product, process, or service by its trade name, trademark, manufacturer, or otherwise, does not necessarily constitute or imply its endorsement, recommendation, or favoring by the United States Government or any agency thereof, or the Regents of the University of California. The views and opinions of authors expressed herein do not necessarily state or reflect those of the United States Government or any agency thereof or the Regents of the University of California.

LBID 229

LAWRENCE BERKELEY LABORATORY - UNIVERSITY OF CALIFORNIA

ENGINEERING NOTE

CODE	SERIAL	PAGE
ES0 510	M4907	1 OF 7

AUTHOR	DEPARTMENT	LOCATION	DATE
R. BYRNS	Mech. Engr.	Berkeley	March 1-1976

PROGRAM — PROJECT — JOB
ESCAR.
REFRIGERATION SYSTEM

TITLE
OIL REMOVAL SYSTEM NOTES FROM Ingersoll-Rand Page 1
" 5
SULLAIR CORP " 2

NOTE FROM "POWER" OCT 1975

How much oil is in your air system?

Evaluation of oil-removal equipment for compressed-air systems can be a problem. Analysis and reasoning help, but a practical experimental setup is necessary, too

By Alton P Swett, Ingersoll-Rand Co, Painted Post, NY

Oil in droplet form, size of the droplets, oil in vapor form, measurement of the amounts, quality of the air in comparison with that from a nonlubricated compressor—all these are aspects of the problem of evaluating a system for taking oil out of compressed air.

Particle size of oil droplets in compressed air has been fairly well established as in the aerosol range of 0.1 to 1.0 microns (a micron is a millionth of a meter or 39.37 × 10^{-6} in.). Droplets around 0.3 microns are probably the most difficult to remove. In gaseous or vapor form, oil will be molecules of 0.0002 to 0.01 microns dia.

The amount of oil vapor in air depends on mixture temperature: Some molecules of oil exposed to air will boil off and mix with the air, the number being determined by the oil-vapor pressure (see table at right). It would be easy to establish a maximum amount of oil vapor or droplets, because the air cannot contain any more oil than what enters or is added to the cylinder. The table shows that the maximum amount in the intake will be insignificant at normal intake temperatures.

For the oil added to the cylinder, compressor manufacturers normally speak of hp-hrs per ounce of oil; a good average would be 100. If 20 brake hp is needed per 100 cfm of air, then 100 hp-hr per ounce of oil is equivalent to 30,000 ft^3 of air per ounce of oil. This means that 27.2 ppm of oil in the air is the maximum at any temperature, because it is all the oil available.

Cooling of compressed air from, say, 350F to 100F will reduce this 27.2-ppm maximum to the 0.4 ppm given in the table. The 26-plus ppm of excess oil becomes an aerosol to be removed.

In evaluating methods of oil removal, a method of measuring oil content is necessary first. Initially the attempt was made to weigh all oil added to the compressor and all oil drained from the intercooler, aftercooler, receiver, and piping. In theory, the difference would be the oil in the compressed air. The measurements proved impractical because stabilization time after a change was so long that it prevented an accurate reading. This was probably because oil collected in low spots in piping and on walls of piping and receiver. Separation of oil from condensed water was also very difficult. Results varied—from 25% to 75% of the compressor-added oil was collected at the receiver drain, an amount equivalent to 20- to 7-ppm oil carryover out of the compressor. Several proprietary oil-measuring devices were tried, too, but good, repeatable quantitative results could not be obtained, until the method described in the box below was introduced.

Average shop air supply varies from 3 to 13 ppm of oil aerosol, so that over 50% of the original 26-plus ppm of oil aerosol is collected in the intercooler, aftercooler, piping, and receiver.

Of the eight filters tested, four gave less than 0.3-ppm downstream, but pressure drop across the various devices was from 7% to 20%. Three other filters gave more than 0.6 ppm with a pressure drop of 1 to 3%. One filter gave between 0.3 and 0.6 ppm with a pressure drop of ½% to 1%.

Conclusions from the study: (1) The sampling-monitor results compared well with calculations from oil amounts in filter drains; (2) better separators have higher pressure drops; (3) very good air quality is possible with sophisticated filter-separators at sacrifice in pressure drop; (4) relatively good quality is achievable with only a small pressure drop. WOK

This paper was prepared for the Technical Article Program of the Compressed Air & Gas Institute.

Oil-vapor amounts vary widely with temperature

Temperature deg F	Vapor pressure mm Hg	ppm
50	0.000015	0.03
100	0.0002	0.4
150	0.003	6
200	0.02	40
250	0.5	1000
300	0.6	1200
350	6.0	12,000

Filter pad in metered flow from compressor can check oil in air

After some experimenting, the final test setup is that shown at right. Filters and separators were tested two or three at a time, with air coming from a single source. All equipment was tested at the same flow rate, set with flow meter and throttle valve. Pressure was read upstream and downstream of each device. Oil collected from each device was weighed. Since flow through the device was known, the drainage could be converted to parts per million. The amount collected was the remainder after removal of at least 50% in the coolers and receiver.

A sampling monitor filter took air samples upstream and downstream of the filters under test. This sampling setup was in a side stream off the air supply, with its filter rated to remove 99.95% of all particles over 0.3 micron. A flow meter on the line allowed a very small known quantity of air to pass through the filter for a known period. The sampling filter was weighed before and after test, with a drying period just after the test to eliminate water. A second filter placed in series from time to time gave a check. The second filter pad never gained any measurable weight, indicating that the sampling filter was effective.

Eight different devices were completely tested. All but one gave less than 1 ppm downstream when upstream air varied in oil content from 4 to 8 ppm. Pressure drops through the devices varied, however, as mentioned above, from ½% to 20% of upstream pressure.

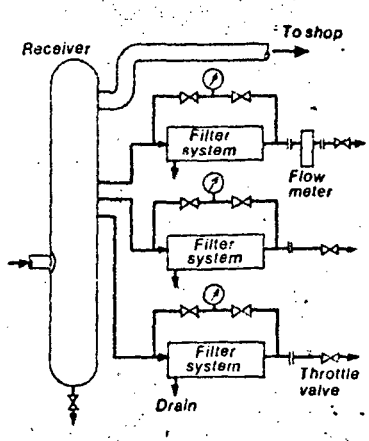

THIS NOTE FROM SULLAIR CORP
about circa ~ 1971

OIL FREE AIR BY SULLAIR

Paradoxically, the SULLAIR compressor is THE answer to oil free air. In fact, the production of oil free air was one of the primary objectives when the compression cycle or system was designed. We can, however, understand the initial disbelief when one is told the unit is internally flooded with oil. So please stay with us through the explanation. We suggest you pull the enclosed schematic and put it before you for convenience. Each numbered paragraph which follows applies to the matching number on the schematic.

(1) Atmospheric air is never just air. Included is water, dirt and usually objectionable gases. The inlet filter will remove just the dirt and unless considerable investment is made in an elaborate filter, all the dirt or particulate is not removed. And then there is maintenance - or the lack of it. Our standard filter is a simple dry type, two stage with inexpensive replaceable cartridges. Included on the instrument panel is a fouling indicator which shows red when the filter requires servicing.

We fully recognize very fine particles will get through to the compressor, but here is the best part. These particles are not harmful to the compressor (even large pieces of foreign matter) plus the oil system does a beautiful scrubbing job, ultimately disposing the matter in the oil filter, and not in your air system, or an intercooler (which we do not have) or aftercooler.

(2) The air enters the compressor inlet and is literally flooded with oil (25 gpm in a 650 cfm size, for example). Please note the hydrodynamic action of the compressor rotors turning together in a flood of oil. There is no shearing effect on the oil which is very important in the oil free air process. The shearing of oil, as in the case of piston rings against a cylinder wall (lubricated recip) or of the vanes against the stator and guide slots (sliding vane compressor), is what produces the fine mist or aerosols which elude all practical, commercially available filters. None is produced in the SULLAIR compressor.

The above is important, but even more important is the discharge temperature of the air-oil mixture. It is 90 deg. F. above ambient or 190 deg. F. total with a 100 deg. F. ambient. At first glance this seems impossible for single stage compression. But go back to the flood of cooled oil. The heat of compression is rejected to the oil during compression. We exaggerate only slightly when, with tongue in cheek, we claim to approach isothermal compression. Seriously, this is of primary importance.

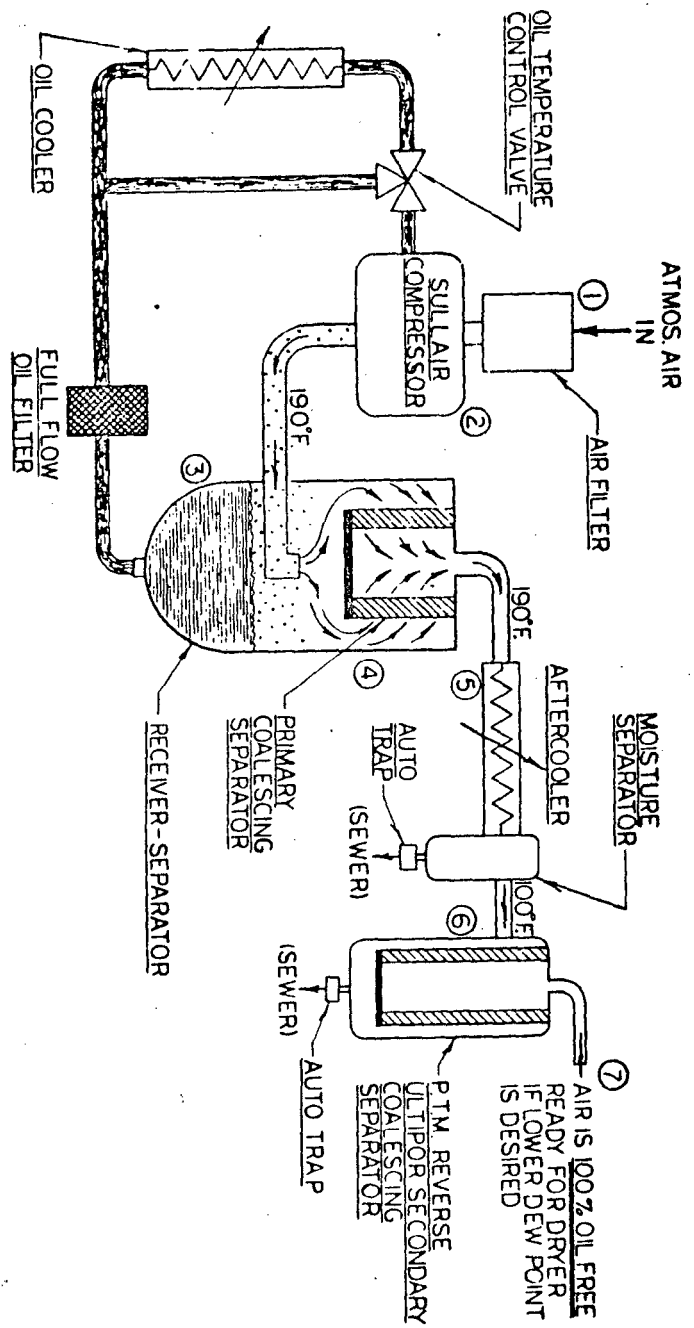

SULLAIR COMPRESSION SYSTEM

RL-322

As long as oil remains below its "breakdown" or "cracking" temperature, it remains oil and is not chemically altered. The oil used in the SULLAIR is standard SAE-10-HD and has a breakdown temperature of at least 240 deg. F., which is well above our 190 deg. F. discharge.

We are well aware of the headaches encountered through the years by industry in trying to filter or separate oil from the air after compression by recips. The severe temperature to which the oil is subjected is the primary source of trouble. Under these temperatures the oil chemically changes and the products of the chemical breakdown include hydrocarbon gases which completely elude any practical filter, but even worse, they recombine in the presence of dense oxygen to form gum and varnish plus the sludge and carbon always found, from the discharge valves of the compressor throughout the air system.

So, when the air and oil leave the SULLAIR after compression, oil is still oil; no shearing action to cause aerosols; no temperature to cause chemical breakdown. The net result is at this point the oil is easily and simply taken completely out of the air.

Before going on, note we mentioned earlier that atmospheric air always contains water and usually objectionable gases. In the case of water, it is still with us at this point - but well into superheat and this is important. We purposely keep the oil temperature well above dew point to prevent any condensation.

In the case of the gases, and this is just a naturally built-in extra (at no extra charge), please note the oil is an excellent absorber. Most gases will stay in the oil and not go into the air system. The oil system capacity is relatively great enough compared to the absorbed gases so that dilution of the oil is not a factor. Should the rate of dilution become high, then either the oil is changed more frequently or a simple side stream clean-up system is added.

(3) The air and oil go directly to the receiver-separator where most of the oil falls to the sump. Note the pressure on top of the oil in the sump is at discharge and remember the oil is injected to the compressor at inlet pressure, ie., there is no oil pump.

The flow of oil is obvious, through the full flow filter, to the cooler (which is either air or water cooled) and back to compressor inlet. The cooler is bypassed with the proper quantity, by the temperature control valve.

(4) The oil which does not drop to the sump is carried with the air but it is still liquid oil, even though the size of the droplet is small. The primary coalescing separator removes virtually all of these droplets returning the collected oil to the sump, and the air to the discharge line.

We said "virtually all of the oil droplets". We mean that as far as replenishing the oil to the compressor system is concerned, the amount is nil. Specifically, the addition of oil to the system will be required about every two to three months based on 24 hours per day, seven days per week operation.

The oil droplets which do pass through the primary coalescing separator obviously go with the air to the aftercooler. Specifically, the accurately measured quantity is 15 PPM by weight, and it is still oil. At this point the air is only 99.999% oil free.

(5) The aftercooler-separator performs its normal function, ie., removes moisture from the air to saturation at pressure and temperature.

(6) There are several excellent secondary coalescing separators available on the market which are capable of removing absolutely all of the remaining oil in the air from our compression system. We normally furnish the Pall Trinity Mirco Corporation Reverse Ultipor unit which removes all droplets down to 0.6 micron which is well below any oil droplet size from the SULLAIR system. Maintenance of this separator-filter is nil because the oil is oil and not gum, varnish, etc., and the dirt which usually carries over from any other compressor is back in our oil filter. The oil which is collected simply drains to the PTM sump and is trapped off, and does not clog the elements.

(7) The air is now 100% oil free, but saturated with water at 100-125 PSIG and 100 deg. F. If no further reduction in dew point is desired it is ready to use. However, unless the ambient is 100 deg. F. or more, moisture will condense in the distribution system, causing many problems.

For 35 deg. F. dew point at 100 PSIG, a mechanical refrigeration dryer can be employed. For lower dew points, either absorber or adsorber dryers are available. In any case, the dryer sees only air and water. With other compressors (lubricated and non-lubricated recips, sliding vane, or centrifugal) the dryer usually receives, besides air and water, everything from oil, varnish and sludge to dirt to other gases, all or any of which causes the dryer to require more maintenance.

10. Oil Carry-Over

In the compressor industry, the single-stage, oil-cooled screw unit is known as an "oil flooded" machine. Recognizing that the machine has many outstanding advantages over other designs, skeptics frequently seize on the direct air-oil contact in the compressor as an offsetting disadvantage. The concern is that mixing the air with oil during compression will cause substantial amounts of oil to be carried into the air distribution system. Many Plant Engineers and Maintenance Engineers have had undesireable experiences with oil-fouled air lines. In fact, a Sullair screw compressor will pass far less oil into the lines than any other lubricated machine. The machines are even being used to supply air in the most stringent absolutely oil free applications: breathable air and film transport, for example.

The key to low oil carry-over from the Sullair screw compressor is the extremely low operating temperature: about 180°F at the compressor discharge. At these low temperatures, the oil remains top quality liquid oil. Liquid oil may be readily, efficiently separated from air, first by velocity (in the compressor sump), and second by mechanical means (a membrane separator so fine that it will not pass cigarette smoke). Downstream of the air-oil separator, the quality of the air leaving the Sullair system is far superior to that leaving the reciprocating machine.

In the reciprocating machine, oil is injected in small quantities for cylinder lubrication only. Temperatures of 400°F and higher within the compression chamber are common. A worn valve or ring will cause local temperatures to rise still higher. At these elevated temperatures, oil becomes vapor rather than liquid. Furtheremore, the vapors decompose to hydrocarbon components rather than lubricating oil. The vapors and aerosols are extremely difficult to separate from air. In fact, they shall combine with the dense oxygen components in the compressed air and reform as the black carbon dust and/or sludge found in many plant air systems. These chemical changes common to lubricating oil in hot running compressors preclude the use of a "tight" mechanical separator of the type used in the Sullair system. An extremely fine separator will clog almost immediately with the hydrocarbon sludge.

Any small quantity of oil which may pass into the air system from a Sullair screw unit is still top quality oil-separated in secondary systems for absolutely oil-free air or allowed to pass harmlessly through the piping. The larger quantities of oil which are fed into the air system from the reciprocating machine, by contrast, pass as vapors which condense to foul valves, tools, traps, and ultimately the entire piping system.

GENERAL

This story of the SULLAIR system was primarily prepared to explain how oil free air is produced. Other important considerations are summarized as follows:

1. Packaged unit - no foundation required, not even tie down bolts.
2. Any type driver is available. With variable speed (steam turbine or engine) the pressure line on a recorder will be a circle from zero to 100% capacity.
3. There is no surge point - any number of units can be run in parallel without elaborate controls.
4. Stepless capacity control at constant speed.
5. No receiver required - line pressure is held to plus-minus 2 PSI.
6. Except for bearings, there is zero wear in the compressor.
7. Compressor end is unconditionally guaranteed for two years. If anything should happen in the two year period, we replace the air end in its entirety, and it takes about six hours for the changeout.
8. Forget spare parts. In ten years, if, say a bearing goes out, a complete air end is furnished in exchange for the old one at about one-third the price of the parts alone to overhaul other compressors. Shipment is either from local or factory stock. Maximum shipment time is 24 hours to the nearest airport.
9. Unattended operation for months. We even furnish a locking device on the canopy to prevent unauthorized persons from making "adjustments".
10. Ideally suited for "end of the line" installation.

There is more to our story, but we will stop here. If it sounds incredible, we can only offer this explanation. The SULLAIR people, all of whom have been associated with compressor manufacturing for years, operate with the basic premise that a customer should be properly treated.

We hope to be doing business with you.

Rotary-screw compressor improvements are continuing

Better oil-removal systems and controls enhance rotary screw's competitive position

By Henry Van Ormer, Ingersoll-Rand Co

The oil-cooled rotary-screw compressor has been around the industry for over 40 years. But until recently, it was considered only for engine-driven portables and low-hp electric-motor-driven units. In 1970, the introduction of the asymmetrical profile gave about 15% improvement in efficiency—enough to make the type desirable for continuous duty in sizes to 500 hp and 2500 cfm. Efficiency is now almost the same as that of single-stage, double-acting recip units and centrifugal compressors, and only about 10% less than for two-stage, double-acting recip units.

The oil-cooled rotary compressor, such as the one shown below, works by interaction of the two rotors. The female rotor grooves act as cylinders that seal off air charges, and the male rotor lobes act as pistons to squeeze the air against the discharge cover. At the beginning of compression, oil is sprayed into the cylinder through orifices along the cylinder wall. The cool filtered oil not only absorbs the heat of compression as it is generated, but also lubricates and seals the rotors. Compression continues until full discharge pressure is reached as the groove end turns to the outlet port in the housing.

The unique characteristic of the rotary-screw compressor is its oil cooling. The heated oil exits with the compressed air and goes to a heat exchanger, which can be water- or air-cooled. The oil is never cracked or burned by high operating temperatures. This lets the compressor run continuously at full load and pressure.

In some units producing nonlubricated air, timing gears drive the rotors and keep them from contacting each other. The more-common oil-cooled screw-compressor machines, however, rely on one rotor to drive the other. Usually, the stronger male rotor drives the female rotor by pitchline drive, similar to helical gearing.

Rotor profiles were originally symmetrical, but the profiles put the machine at an efficiency disadvantage compared with other types of high-capacity, continuous-duty compressors. Asymmetrical rotor design reduced the leakage path back to the intake, giving lower compression losses and higher hydraulic efficiency in handling the air/oil mixture.

Today, the oil-cooled rotary-screw compressor is a compact source of continuous-duty compressed air. A 500-hp unit requires only about 8 x 12 ft of floor space and weighs only about 14,000 lb. It can be installed on any surface that will support its static weight. It can serve in a central compressor house or as a semiportable or portable unit, motor- or engine-driven.

Noise suppression is relatively easy. Motor-driven models producing 75 to 85 dbA at one meter in the Cagi-Pneurop test-code setup are commercially available.

Efficiency of the rotary-screw machine is lower than that of some other continuous-duty types, but other factors should be identified to find the real total power cost. Job conditions are important for this. Installation cost—in time and material—should include piping, air receivers and other auxiliaries. Interest on investment, operating cost, maintenance cost and cooling-water cost must be added in, too. Resale value less cost to "uninstall" is the final factor in a complete evaluation.

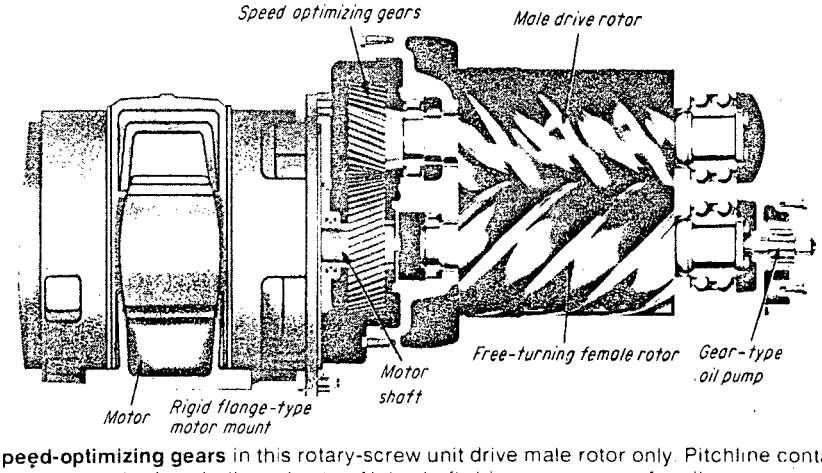

Speed-optimizing gears in this rotary-screw unit drive male rotor only. Pitchline contact then powers the female (lower) rotor. Note shaft-driven gear pump for oil

Judging oil separation

Early oil-separation systems were of the absorption type, with felt pads. Performance proved limited, because the pads absorbed oil and plugged, and thus tended to cause excessive pressure drop and consequent high temperature. Oil carryover also became excessive.

Various types of filter elements were tried. One of the most effective was the compartmentalized virgin-wool separator, which effectively separated the oil, and did not experience sudden failures that dump large amounts of oil into the discharge air. Attempts have been made to develop inertial/mechanical elements that do not work by absorption, but merely trap the oil and let it return to the compressor.

Fiber glass and metal or plastic forms were obviously the right materials. Early designs, when sized correctly, did separate effectively, but they were always threatened by sudden failure from a leak, crack or pinhole anywhere in the element or at sealing edges. Buildup in pressure as the element became dirty could also cause a sudden failure by collapsing the element.

Vertical mount rather than horizontal is most common for oil-separator elements. If a separator element is vertically mounted and the unit is run at lower pressures, even 15-20% lower, the scavenging system cannot handle the increased amount of oil. Re-entrainment occurs, causing excessive oil carryover.

A dual oil-separation system is a new way to improve oil-separation ability. Such a separator, shown in left drawing on facing page, is a double unit with a horizontal first stage and a vertical second stage. This is entirely inertial/mechanical, and does not depend on absorption for performance. Withstanding a minimum of 50-psi differential pressure, the separator will not collapse from dirt buildup, because the safety cutoff system will shut down the compressor at far below this differential. The scavenging system has no pickup tube to handle the oil, and so can operate effectively even at low pressures. Failure of the first stage in this separator will show up as gradually increased oil carryover and pressure drop, which will be noticed during normal operation and maintenance. Sealing

RL-3220-2a(Rev. 8/71)

ends of the elements are protected by a strong rolled edge and a special bonding agent.

Oil flow is the life-blood

Because the oil in a rotary-screw compressor cools, seals and lubricates, the quality of the oil cooling, filtration and flow has a high impact on life of the bearings in the machine. Most oil-cooling systems operate at 100-110 deg F above ambient, with a minimum temperature of 170 F to prevent internal water contamination of oil by condensation. Oil filtration to the bearings should be at least 25 microns, but most manufacturers install up to 10-micron filtration for optimum results.

Oil circulation is by two methods—pressure differential or an oil pump. In the pressure-differential system, oil flow results from the difference in pressure between the oil sump tank at about 100 psig and the injection area in the compressor, about 25-35 psig at full load. These systems generally maintain full lubrication at all times by fail-safe design: A minimum-pressure valve assures adequate internal pressure for oil circulation, because the valve cannot open before that pressure is reached.

Two basic disadvantages of the pressure-differential system are (1) that flow to bearings may not be optimum at startup, and (2) that power is somewhat higher than for an oil pump. These drawbacks may be insignificant, depending on the use.

The oil-pump system gives immediate optimum flow to bearings at startup and requires less unloaded power.

But the system has its inherent disadvantages. Dependence on the pump is one. A pump failure means danger of destruction for the entire compressor. Another disadvantage is the limit on flow. For higher-pressure operation, this could make the flow marginal. In the pressure-differential system, on the other hand, the higher the discharge pressure, the higher the flow.

Combination of the two systems has been achieved recently. Diagram at lower right on facing page shows an example. At low operating pressures, when discharge pressure alone might be inadequate, the pump gives enough flow. At high pressures, when more oil is needed, it is moved by discharge pressure. On cold startup, with thick oil, the pump forces oil into the compressor, so that lubrication need not wait until discharge pressure builds. Presence of the oil pump allows the receiver to be completely unloaded and bled down, saving considerably on unloaded power.

The housing of a packaged unit is also a support system vital to the success of the package. Noise control, for one example, depends partly on the sound-attenuating qualities of the housing. Shock mounting of the unit's major components and application of heavy-duty hose instead of pipe wherever possible are two other factors in noise control, of course.

Environment in the housing can contribute to optimum conditions for each component. Auxiliary cooling for the motor is an example. Ductwork and well-planned design can prevent recirculation of motor cooling air. Result is lower operating temperature for the motor windings than if the motor were running on an open floor. Longer life for the motor is obtained.

Control of operating temperature for the compressor and oil system is another function of a proper enclosure. If certain parts of the system experience an overly cool temperature, below about 150 F, during humid weather, condensation can occur inside the compressor, contaminating the oil and cutting bearing life. If condensation does occur, the compressor must be shut down for 5-6 hr to allow water and oil to separate. The compressor then is obviously not a 24-hr-a-day machine.

Prefiltering of air entering the enclosure can protect components. Self-sealing doors and controlled intakes figure here, but the compressor must still be easily accessible for maintenance.

Control usually modulates

Three basic types of controls for rotary packaged units are supplemented by several other versions. Modulating is the standard control on most models. A modulating inlet control automatically matches air supply to air demand. The inlet control plate modulates or floats, throttling air. A pressure regulator controls the action, and the compressor operates in a narrow pressure range between no-load and load. Except in extreme cases, no air receiver is necessary with this type of control, and discharge is still pulsation-free.

Air-receiver cost is eliminated, and system pressure is held with lower power demand under maximum load conditions, because buildup to a high cutout pressure is unnecessary, unlike other control systems. Where average load on the compressor is 70-100%, modulating control is most efficient in power use.

Load/no-load control with modulation is a control type for installations where air demand varies. A full-unload feature gives minimum unloaded power consumption. The modulating control operates in the same way as the standard control, but when a low-demand period is encountered, the intake valve closes fully. A rise in system pressure to 2-3 psi below full-unload signals for this action. The compressor then runs without delivering any air. A timer is simultaneously activated, and if discharge pressure holds for, say, 5 min, the compressor automatic-blowdown valve opens, and the compressor continues to run at lowest power consumption.

Unloaded power consumption with this control type is usually less than 25% of full-load power in the bled-down condition. Type of oil system influences the actual value. The control is the most efficient from a power-demand standpoint when the average demand in under 70% of full-load capacity, or if the duty cycle varies from continuous duty at one time to intermittent duty at others. Although an air receiver is not normally required for this control, one is recommended.

Start-stop control is a load/no-load control with built-in automatic compressor start and stop. After the compressor blows down its internal pressure, a second timer usually set for 5 min, is activated, and stops the motor when it times out. Restart is automatic when system pressure falls to cut-in value. A selector switch gives either constant speed or start-stop control.

Air-storage volume is essential with this system, to get most efficient operation. At least a gallon of storage capacity, in system piping or air receiver, is recommended for each cfm of actual compressor capacity.

Check hidden factors

Performance and power cost are affected by factors that are not always readily evident. Pressure drop across an oil-separation system is an example. Some manufacturers rate compressors on total unit performance, which takes all system losses into account. A performance rating based on bare-compressor output ignores such losses as intake filter, oil system and oil separation. To illustrate what this can mean: In the 100-psi operating range, every psi increase equals about ½% increase in input power for an oil-cooled rotary-screw compressor. A difference of 8 psi in oil-separator pressure drop in a 500-hp unit would mean about 20 hp saved, or $2000 to $3000 a year.

Drive systems in rotary packaged compressors should have no or minimal misalignment. Flange mount of compressor and motor is probably best. A heavy base is mandatory to assure good compressor/motor alignment, and mounting on heavy-duty vibration-isolation mounts helps with alignment and cuts noise.

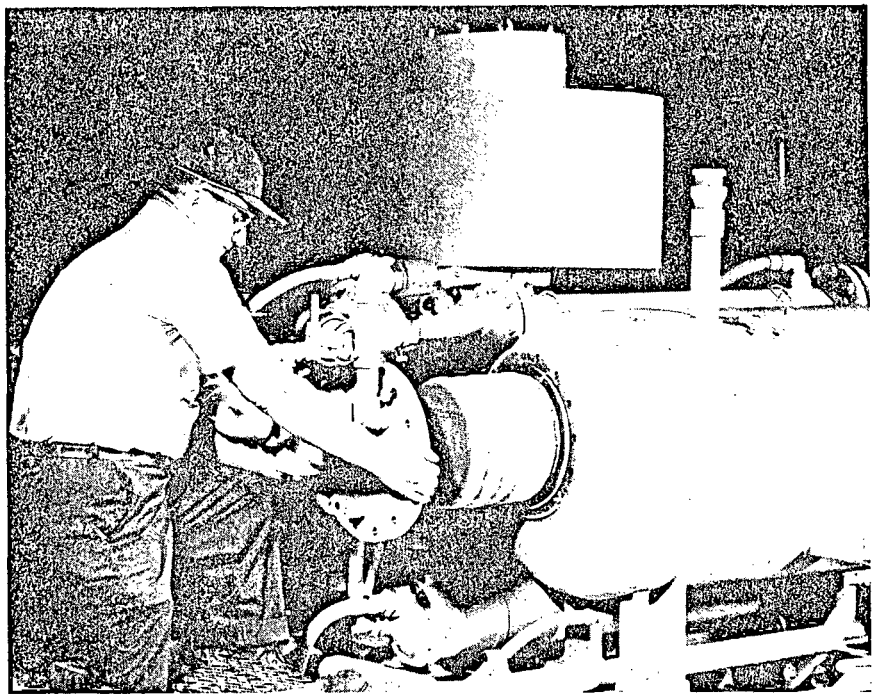

Woven-type packed oil-separator elements are being removed from housing here. Filtration effect of this type usually results in at least 25-30 ppm oil in discharge air

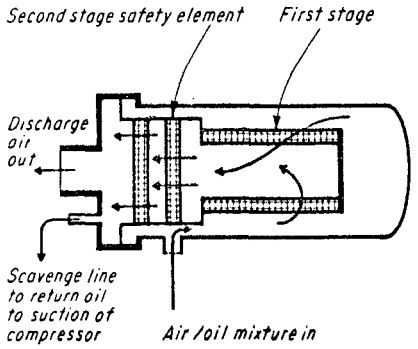

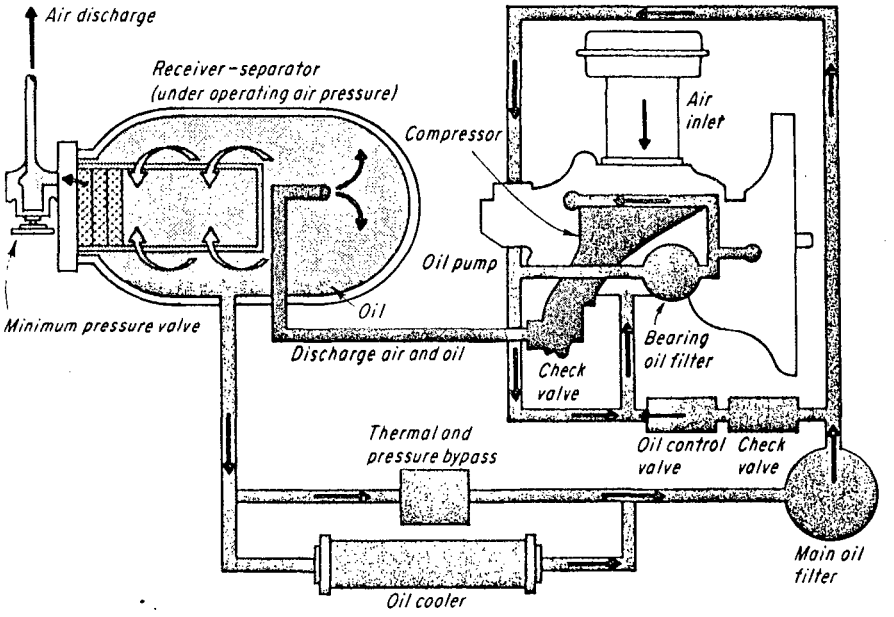

In dual oil separation (above), vertical second-stage elements back up horizontal first stage to slow oil carryover if first-stage failure occurs. At right, **two oil-circulation systems**—the oil-pump and pressure-differential types—are combined to obtain advantages of both and give backup capability in oil return

Design factors affect basic performance, of course. Axial vs radial inlet, the built-in pressure ratio, the length/diameter ratio, the helix angle, sealing strips, rotor clearances and finish are some. Two definite rules always apply, however: Rotor tip speed must be close to optimum, and larger-diameter rotors are always more efficient than smaller-diameter ones at a given tip speed. Differences in tip speed are partly responsible for performance-range width as great as 21.5 to 32 bhp/100 cfm. The larger figure holds for some smaller units in the 7.5-to-15-hp span.

Multistaging is sometimes a factor with rotary-screw machines. In recip and other "non-oil-cooled" compressors, multistaging increases the efficiency primarily because of intercooler action. In the oil-cooled rotary-screw compressor, however, heat of compression is removed by the oil. Two-stage machines of this type are somewhat more efficient than single-stage, but only because the lower pressure differential across each screw set reduces blowby or leakage. Intercooling would be unnecessary. Discharge pressures must be over 150 psi before two stages become economical in the oil-cooled rotary-screw compressor. Nonlubricated rotary-screw machines are jacket-cooled, and can, of course, benefit from intercooling in two-stage design. **WOK**

THIS NOTE FROM THE MAGAZINE "POWER" OCT 1974

LAWRENCE BERKELEY LABORATORY - UNIVERSITY OF CALIFORNIA
ENGINEERING NOTE
AI
DEPARTMENT
LOCATION
CODE ESO 510
SERIAL M4907
DATE
PAGE 7 OF 7

This report was done with support from the Department of Energy. Any conclusions or opinions expressed in this report represent solely those of the author(s) and not necessarily those of The Regents of the University of California, the Lawrence Berkeley Laboratory or the Department of Energy.

Reference to a company or product name does not imply approval or recommendation of the product by the University of California or the U.S. Department of Energy to the exclusion of others that may be suitable.

TECHNICAL INFORMATION DEPARTMENT
LAWRENCE BERKELEY LABORATORY
UNIVERSITY OF CALIFORNIA
BERKELEY, CALIFORNIA 94720