UC-61
LBID-272 c.1

Lawrence Berkeley Laboratory
UNIVERSITY OF CALIFORNIA

ENERGY & ENVIRONMENT DIVISION

RECEIVED
LAWRENCE
BERKELEY LABORATORY

DEC 4 1980

LIBRARY AND
DOCUMENTS SECTION

CATALYTIC BIOMASS LIQUEFACTION QUARTERLY REPORT

Hubert Davis, Roger Djafar, Sabri Ergun, Carlos Figueroa,
Cihan Karatas, Larry Schaleger, Manu Seth, James Wrathall,
Nasser Yaghoubzadeh and Gary Yu

August 1980

For Reference

Not to be taken from this room

Prepared for the U.S. Department of Energy under Contract W-7405-ENG-48

LBID-272 c.1

DISCLAIMER

This document was prepared as an account of work sponsored by the United States Government. While this document is believed to contain correct information, neither the United States Government nor any agency thereof, nor the Regents of the University of California, nor any of their employees, makes any warranty, express or implied, or assumes any legal responsibility for the accuracy, completeness, or usefulness of any information, apparatus, product, or process disclosed, or represents that its use would not infringe privately owned rights. Reference herein to any specific commercial product, process, or service by its trade name, trademark, manufacturer, or otherwise, does not necessarily constitute or imply its endorsement, recommendation, or favoring by the United States Government or any agency thereof, or the Regents of the University of California. The views and opinions of authors expressed herein do not necessarily state or reflect those of the United States Government or any agency thereof or the Regents of the University of California.

LBID-272

CATALYTIC BIOMASS LIQUEFACTION

QUARTERLY REPORT

Thermochemical Conversion
Biomass Energy Systems Branch
Department of Energy

April-June, 1980

Hubert Davis, Roger Djafar, Sabri Ergun,
Carlos Figueroa, Cihan Karatas, Larry Schaleger,
Manu Seth, James Wrathall, Nasser Yaghoubzadeh and Gary Yu

This work was supported by the U. S. Department of Energy
under Contract W-7405-ENG-48.

CONTENTS

		Page
1.	INTRODUCTION	1
2.	CHEMICAL CHARACTERIZATION OF OIL FROM BIOMASS	2
3.	EFFECT OF pH ON BIOMASS LIQUEFACTION	4
4.	SOLVOLYTIC LIQUEFACTION	7
5.	CLU MODIFICATIONS	9
6.	EXPENDITURES	11
7.	FOURTH QUARTER'S ACTIVITIES	12

1. INTRODUCTION

The major portion of the third quarter's activities went towards an engineering effort dedicated to bringing the continuous liquefaction unit (PEU), a continuous tubular reactor for biomass liquefaction, to the point of operational readiness. This goal has yet to be achieved, however, as trial runs have revealed design deficiencies which are now in the process of being corrected. The new design is discussed in the section on CLU Modifications.

The remainder of this report relates progress on the research front. One program involves the characterization of wood-derived oil in terms of its chemical constituents. Several dozen volatile constituents of aqueous effluent from Albany test run TR-7 have now been tentatively identified. A tubular bomb minireactor which permits liquefaction experiments to be conducted rapidly on a small scale is now fully operational. The first results of its use, regarding an attempt to define the relationships between catalyst concentration, pH, yield and conversion, are now reported. Finally, the latest results in the effort to liquefy biomass by means of solvolysis are given.

2. CHEMICAL CHARACTERIZATION OF OIL FROM BIOMASS

This past quarter's effort centered on the identification of volatile components contained in aqueous effluent from Albany Test Run No. 7. A sample of the aqueous phase from this run was extracted with chloroform and the chloroform extract was subjected to GC-MS analysis. Identifications were made by matching the mass spectra of individual components of the mixture against reference spectra contained in a 25,000-compound computer library, or, when computer matching failed, by a combination of chemical interpretation and eyeball comparison with reference spectra gleaned from the open literature by exhaustive searching.

Table I provides a list of components according to their relative retention time on a wall-coated open tubular column using a stationary phase of SP-2100 (methyl silicone). This non-polar liquid phase elutes even polar organics roughly in order of increasing boiling point. The identifications are given as T = tentative or P = probable and the relative amounts of each component, as indicated by the height of the g.c. peak, are given as tr = trace, major or minor. Strictly speaking, all identifications must be considered tentative until the compounds are isolated by preparative gas chromatography and their infrared and nuclear magnetic resonance spectra and g.c. retention times found identical with those of authentic samples. However, such an extensive study is not contemplated at this time.

Since it has proved difficult to cleanly separate aqueous and oil phases, some water-insoluble components may have been extracted into the chloroform layer. However, all of the compounds identified possess at least one oxygen atom, suggesting at least some water solubility. Certain water-soluble compounds would not be expected to appear on the list. Diols, such as ethylene glycol, would not be extracted into chloroform. The dihydric and higher phenols, e.g., catechol, resorcinol, hydroquinone, and phloroglucinol, do not elute from the g.c. column under the conditions used in the GC-MS analysis and would therefore also be missed. Thus the list of Table 1 includes only the volatile, chloroform extractables of the aqueous phase. What fraction of the total organics contained in the aqueous phase they represent has yet to be determined.

GC-MS analysis is sometimes more revealing as to components not present. For example we can say with a high degree of confidence that furans are not present in any appreciable amounts in the extracts examined. This is surprising since furans are water soluble and are known to be primary decomposition products of the pentoses and hexoses released in the first stage hydrolysis in the LBL process. The present results suggest that these first-formed furans do not survive the conditions of liquefaction.

Phenols are particularly troublesome components of synfuel effluents because of their corrosivity, toxicity and resistance to biodegradation. In this work three expected monophenols--guaiacol, methylguaiacol and ethylguaiacol--have been identified. In order to determine the presence of species such as catechol, which is found in coal process waters, other techniques must be used. One such method, HPLC, is currently under development in our laboratories.

This report represents a first step in the characterization of wood-derived oils. A substantial fraction of the oil produced in the LBL process ends up in the aqueous phase, the recovery of which may be required for economic and/or environmental reasons. Information such as that provided herein may be necessary in order to provide a basis for devising recovery schemes, e.g., solvent extraction or distillation, and for indicating wastewater treatment methods appropriate for the removal of specific toxic or mutagenic substances. We next need to quantitate the results, to begin an examination of recovery options and to have the effluents screened for toxicity and mutagenicity.

We have also conducted a preliminary survey of the volatile components present in the TR-7 oil phase. Many of the same substances are present in both organic and aqueous phases. It is becoming clear that the relationship between wood-derived oil and petroleum crude is, to say the least, distant. Petroleum consists largely of hydrocarbons (paraffins, naphthenes and aromatics), while oil-from-wood contains few or none of these, being made up almost entirely of semi-polar organics and phenols. Although such chemical disparity becomes insignificant if wood oil is merely to be burned as low grade bunker fuel, it assumes paramount importance if product upgrading to transportation fuel is contemplated. Wood oil may prove more valuable as a source of commercial chemicals, a petrochemical substitute or a chemical feedstock. The economic viability of direct liquefaction may ultimately depend on our ability to exploit wood oil's chemical uniqueness rather than its similarity to fossil fuels.

Table 1

Compounds Present in Chloroform Extract of TR-7 Aqueous Effluent

No.	Time (sec)	Mass	ID (Abundance)	T or P *
1.	196	142	2,4-dimethyl-3-heptanone (tr)	T
2.	205	84	cyclopentanone (major)	P
3.	255	82	2-cyclopentenone (minor)	P
4.	271	98	cyclohexanone (major)	P
5.	275	98	3-methylcyclopentanone (major)	P
6.	308	96	E,E-2,4-hexadienal (tr)	T
7.	337	112	3-methylcyclohexanone (minor)	P
8.	345	112	Isomer of 337? (tr)	
9.	355	112	Isomer of 337? (tr)	
10.	379	96	2-methylcyclopentanone (major)	P
11.	399	86	butyrolactone (minor)	P
12.	445	110	2-ethyl-2-cyclopentenone or 2-X-dimethyl-2-cyclopentenone (X $\neq$ 3) (major)	T
13.	458	110	Isomer of 445? (tr)	
14.	475	-	Unident (tr)	
15.	498	96	3-methyl-2-cyclopentenone (minor)	P
16.	567	110	Isomer of 445? (tr)	
17.	579	110	2,3-dimethyl-2-cyclopentenone (minor)	P
18.	652	124	3,4,5-trimethyl-2-cyclopentenone (tr)	T
19.	669	124	4,6-dimethyl-2-pyranone (tr)	T
20.	677	110	Unident (tr)	
21.	750	124	Isomer of 652 or 858 (tr)	
22.	820	124	Isomer of 652 or 858 (tr)	
23.	846	124	Isomer of 652 or 858 (tr)	
24.	858	124	Guaiacol (minor)	P
25.	1140	138	2-methoxy-4-methylphenol (tr)	T
26.	1371	152	2-methoxy-4-ethylphenol (tr)	T

* T = TENTATIVE; P = PROBABLE

3. EFFECT OF pH ON BIOMASS LIQUEFACTION

In an earlier report, LBL 11019, we described a mini-reactor tubular bomb capable of being heated to 360°C in as little as 2.5 min. This quarter, using the above reactor, we conducted several runs for determining the influence of pH on oil yield. Four series of experiments were conducted. In the first, only sodium carbonate was used. In the second, only sodium hydoxide, in the third, both sodium hydroxide and sodium carbonate were used and in the fourth, no alkali was added. For all reactors, acetone-soluble and acetone-insoluble yields were determined. The results are summarized in Table 2.

The reproducibility of the results is believed to be $\sim \pm 3\%$. The major source of error is probably associated with the difficulty of obtaining representative slurry samples. The analytical scheme is in the process of being revised in an effort to provide better precision and increased mass recovery. Mass recoveries are in the 40-63% range. The unaccounted mass is lost largely as water, carbon dioxide and volatile organics. By the nature of the work-up procedure, the lower boiling products, including all those identified in Table I, would be lost as vapor.

The results, although incomplete, permit some preliminary observations to be made. For example, pH (i.e., hydroxide ion concentration) does not appear to be a critical variable in the pH range of 7.1 to 12.9. Rather it would appear that the yield of acetone solubles varies inversely with sodium ion concentration, at least under the reaction conditions employed. On the other hand, the yield of acetone insolubles seems to vary randomly. From the high and randomly scattered yields of acetone-insolubles (primarily char) the residence time of 15 min appears to be too long at 360°C. The non-reproducibility of the insolubles yields may be partly due to sampling error and inability to correct adequately for inorganic salts (sodium compounds). Or it may indicate a high sensitivity of charring rate to reaction conditions at the temperature and residence time used. The cause is being investigated and the general procedure is being improved. The insolubles in runs 22-26 (NA OH added) are significantly lower than the general average.

The tubular minireactor affords the capability to conduct liquefaction experiments rapidly on a small scale. Disadvantages include the possibilities of large sampling errors and noncorrelation of results with those obtained on a larger scale owing to local thermal effects and poor mass transfer between gas and condensed phases. However, the extent and significance of such errors are under investigation currently, along with an extension of the work to evaluate the effect of heat up. and residence times on yield and conversion. The reactor is proving to be a useful tool for identifiying trends in effects of variables and for rough optimization of reaction conditions.

TABLE 2.

Effect of pH and Added Catalyst (Alkali) on Conversion of Hydrolyzed Wood Slurry

Reaction Temperature: 360°C
Heat-up time: 2½ min
Residence time: 15 min
Initial pressure: 500 PSIG
Gases: CO, H_2

Reaction No.	Alkali Wt % of slurry		pH of Slurry	Acetone Soluble %	Acetone Insoluble %	Mass Recovery %
	NA_2 CO_3	Na OH				
RT 18	20	0	10.6	27.0	13.2	40.2
RT 19	10	0	10.2	28.5	17.7	46.2
RT 4	4	0	9.7	33.	30.	63
RT 5	4	0	9.7	30.5	27.9	58.4
RT 41	1	0	7.0	32.0	19.1	51.1
RT 26	0	2	12.2	31.6	19.5	51.1
RT 23	0	1	10.5	36.6	14.5	51.1
RT 22	0	0.5	7.1	37.0	14.0	51.0
RT 21	4.5	4.0	12.9	25.2	26.3	51.4
RT 25	0	0	4	33.	24.	56.
RT 42	0	0	4	31.5	16.1	47.6
RT 45	0	0	4	34.6	14.6	49.2
Ave. (S.D.)				31.8 ± 3.5	19.7 ± 5.9	51.4 ± 5.6

4. SOLVOLYTIC LIQUEFACTION

Wood flour of 9% moisture treatment with acidified alcohols proved to be an effective pretreatment step. In some cases 95+% wood solubilization was obtained. Some highlights of the results are given in Table 3.

Similar results were obtained by using wood flour of 12% (field dried) and 50% (green wood) moisture. The pretreatment thus may offer the possibility of eliminating the drying step.

Wood hydrolysis runs were made to compare with the solvolytic treatment. Kinetic data analysis shows a similar activation energy (about 6 KCAL/mole) for both processes, indicating reactions of similar energetics. However, the solvolytic process is one to two orders of magnitude, depending on solvent and process conditions, faster than hydrolysis. An attempt to explain this difference is underway.

Vacuum distillation is used to recover the solvent in an effort to study solvent incorporation, if any, and the characteristics of treated wood product. Results indicated a 10-75% (wt. based on starting wood) solvent incorporation. See Table 4. This alkylation effect is throught to be effective in inhibiting condensation or repolymerization of depolymerized wood product. The desolvented wood is black in color and softens at 160°C. Results of product characterization will be included in the next report.

TABLE 3

Some Results of Solvolytic Pretreatment

Solvent	Acetone Insoluble (%)
Butanol*	6.67
Ethylene glycol	4.67
Cyclohexanol	3.23
Phenol	1.50

Reaction condition: 0.1% (by wt) acid
@ 250°C for ½ hr
Solvent/wood = 4/1

* 0.25% acid.
@ 180°C for 1 hr.

TABLE 4

Solvent Incorporation Study

System	Solvent incorporated (%) based on	
	Initial Solvent	Inital dry wood
Butanol	2.32	10.98
Ethylene glycol	2.24	9.82
Cyclohexanol	2.12	12.60
Phenol	17.09	75.05

5. CLU MODIFICATIONS

Currently, the CLU prototype is being modified to overcome two areas of difficulties:

1) slurry feed indication

2) gas feed metering.

Problems in the past indicated a need for accurate measurement of slurry charged to the reactor from a process operation standpoint as well as mass balance considerations. Installation of a recently acquired digial scale with an accuracy of ±0.1 kg will remedy this problem.

Reducing gas feed has been a problem due to system pressure variation causing gas flow changes through the compressors. Installation of a surge vessel, as well as a soon to be received thermal mass flowmeter will result in exact mass (gas) feed into the reactor.

LAWRENCE BERKELEY LABORATORY - UNIVERSITY OF CALIFORNIA

ENGINEERING NOTE

SUBJECT	FILE NO.	PAGE
	NAME: CARLOS FIGUEROA	
	DATE: 8-15-80	

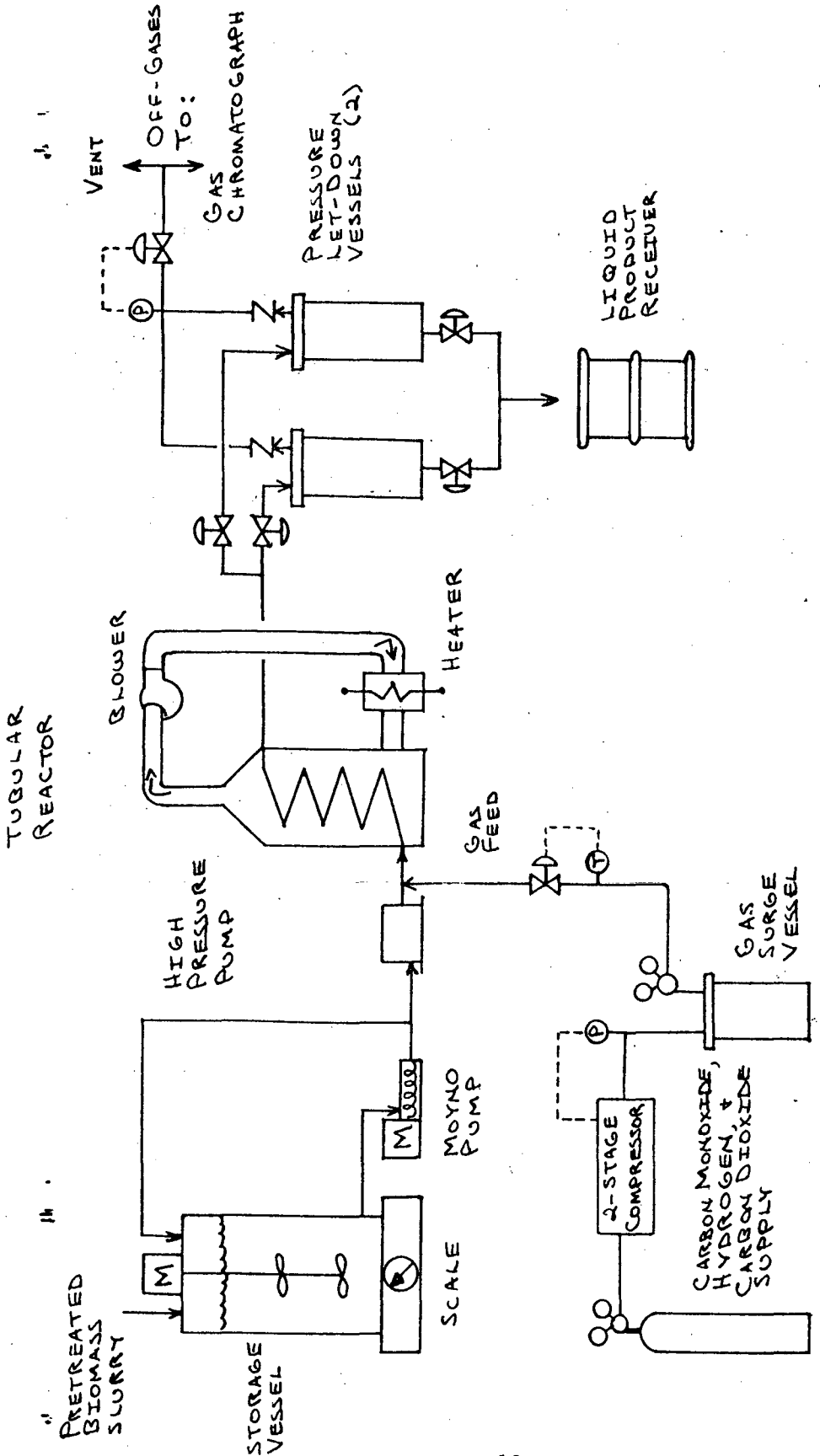

LBL PROCESS EVALUATION UNIT (PEU)

RL-398 7600-54257 (Rev. 9/73)

6. EXPENDITURES

Operating (basic fund) 4770-01 ($680K)

1)	Total expenditures (5/31/80)	$466,022
2)	Average monthly	58,253
3)	May 1980	51,320
4)	% expended 68.5%	
5)	Average projected (June-September)	53,495

Operating (Prototype) 4770-09 (Received $211K in June)

1)	Total expenditures (estimated)	$40K
2)	Average monthly projected (June-September)	$53K
3)	% expended (estimated) 19%	

Capital Equipment fund 7925-01 (Received $32,500 in June)

1)	Capital Equipment beginning deficit (estimated)	$12K
2)	Research gas chromatograph	$19K
3)	Total expenditures (estimated)	$31K
4)	Remainder	$10.5K
5)	Percent expended 95%	

7. FOURTH QUARTER'S ACTIVITIES

These are the major activities planned for the fourth quarter of FY 80:

1. The slurry pumping system of the CLU will be rebuilt and the gas feed system will be modified to provide better control and monitoring capability. The new target date for operation is now October, 1980.

2. Chemical characterization of the volatile components of TR-7 oil by GC-MS will continue. However, since less than 10% of the oil is likely to be amenable to this technique, attention will turn to other methods such as HPLC and gel permeation chromatography. Solvent extraction schemes for separating the oil into broad chemical classes will also be investigated. The ultimate goal is to develop an operational set of criteria for evaluating wood oil quality.

3. The tubular minireactor technique for studying the relationships among process variables, yield and conversion will be evaluated with regard to accuracy, precision and validity of results. During the fourth quarter the focus will be on optimizing heatup and residence times, pH and catalyst. The effect of temperature will also be examined.

4. The basic chemistry of solvolytic liquefaction will be investigated. Characteristics of solvolytic oil will be determined and comparisons of this oil to those derived from coal and wood will be made. Methods for recovering chemically incorporated solvent from the oil will be explored. The question of process feasibility will be further examined by determining whether solvolytic oil is itself capable of solubilizing wood.

This report was done with support from the Department of Energy. Any conclusions or opinions expressed in this report represent solely those of the author(s) and not necessarily those of The Regents of the University of California, the Lawrence Berkeley Laboratory or the Department of Energy.

Reference to a company or product name does not imply approval or recommendation of the product by the University of California or the U.S. Department of Energy to the exclusion of others that may be suitable.

TECHNICAL INFORMATION DEPARTMENT
LAWRENCE BERKELEY LABORATORY
UNIVERSITY OF CALIFORNIA
BERKELEY, CALIFORNIA 94720