LBID-347 c.1
UC-38

Lawrence Berkeley Laboratory

UNIVERSITY OF CALIFORNIA

Engineering & Technical Services Division

RECEIVED
LAWRENCE
BERKELEY LABORATORY

MAR 19 1981

LIBRARY AND
DOCUMENTS SECTION

For Reference

Not to be taken from this room

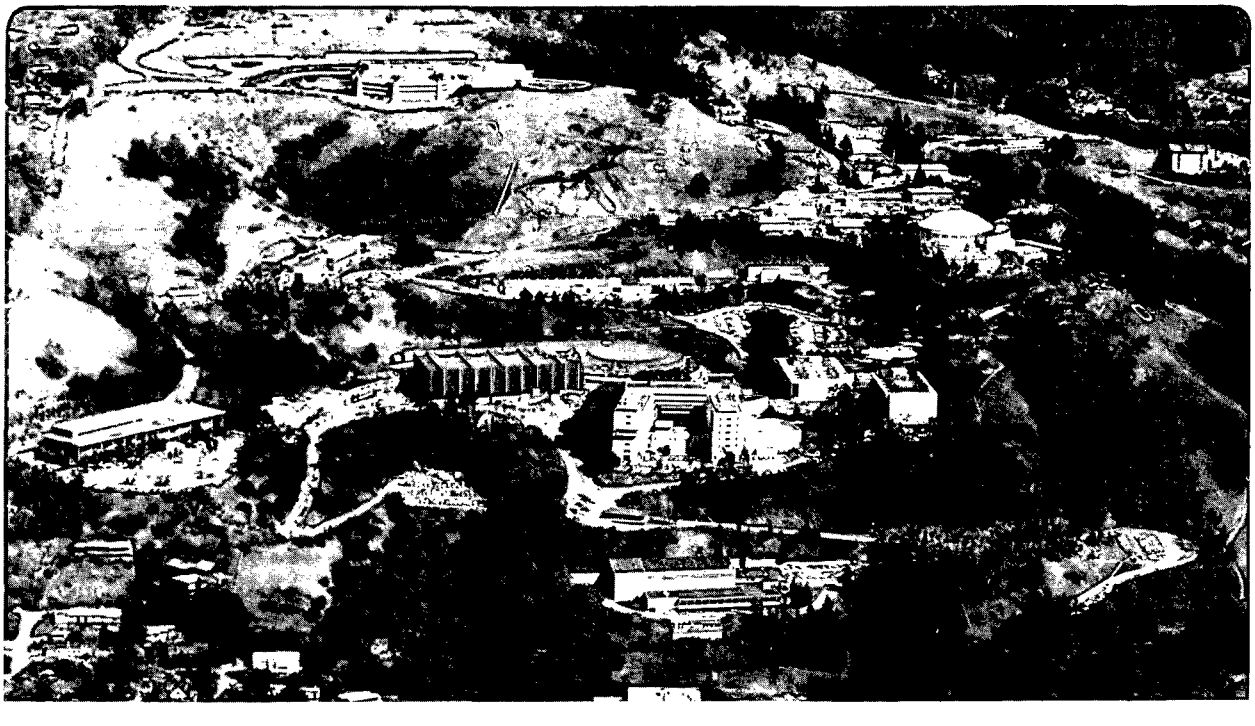

LBID-347 c.1

DISCLAIMER

This document was prepared as an account of work sponsored by the United States Government. While this document is believed to contain correct information, neither the United States Government nor any agency thereof, nor the Regents of the University of California, nor any of their employees, makes any warranty, express or implied, or assumes any legal responsibility for the accuracy, completeness, or usefulness of any information, apparatus, product, or process disclosed, or represents that its use would not infringe privately owned rights. Reference herein to any specific commercial product, process, or service by its trade name, trademark, manufacturer, or otherwise, does not necessarily constitute or imply its endorsement, recommendation, or favoring by the United States Government or any agency thereof, or the Regents of the University of California. The views and opinions of authors expressed herein do not necessarily state or reflect those of the United States Government or any agency thereof or the Regents of the University of California.

LAWRENCE BERKELEY LABORATORY - UNIVERSITY OF CALIFORNIA

ENGINEERING NOTE

CODE	SERIAL	PAGE
LBID 347 P40202	M5674	1 OF 34

AUTHOR	DEPARTMENT	LOCATION	DATE
P. PURGALIS	MECHANICAL ENGINEERING	BERKELEY	JAN 7, 1981

PROGRAM — PROJECT — JOB
PEP-4

P. Purgalis
2-13-81

SUPPORT STRUCTURE

TITLE
SUPPORT FRAME STRUCTUAL CALCULATIONS

THE PURPOSE OF THIS ENGINEERING NOTE IS TO DOCUMENT THE SUPPORT FRAME STRUCTUAL CALCULATIONS. THE CALCULATIONS WERE MADE BY SOL E COOPER, CONSULTING STRUCTUAL ENGINEER. ATTACHED ARE THE CALCULATIONS TOGETHER WITH THE COVER LETTER.

TELEPHONE
(415) 731-1366

CIVIL
STRUCTURAL
PLANNING

SOL E. COOPER
CONSULTING ENGINEER
530 BELVEDERE STREET
SAN FRANCISCO, CALIFORNIA 94117

March 25, 1980

Lawrence Berkeley Laboratory
University of California
Berkeley, CA 94720

Subject: PEP 4 - TPC - Support Frame

Attn: Peter Purgalis, Bldg. 90

Dear Mr. Purgalis:

At your request, I am submitting this report of the consultations I offered in connection with the supporting structure for the Time Projection Chamber (TPC) for your PEP 4 project at the Stanford PEP site.

Much of the work is reflected in calculations which are included as follows:

A. Sheets 1 thru 21 of period 8/30 - 9/2/78 covering the structural check of the support structure.

B. Sheets 1 thru 8 of 9/23/79 relating to field welding of joints in magnet legs.

Support Structure

I was asked to review from the structural viewpoint, design concepts and drawings in progress for the supporting frame for the TPC. My review and a series of meetings with you, Larry Brown and others in your department resulted in my recommendations for revisions in the supporting frame.

The calculations, group A, are based on the revised concept, and were used to establish member sizes and arrangement of the supporting system. You developed drawings and further details to accomodate your total need. In September 1978, I reviewed and marked some proposed detail revisions on your drawings 19C3076, 3086 and 3096. You proceeded to complete the drawings and arrange for fabrication. In August 1979, you gave me copies of drawings 19C3076-Rev. C, 19C3086-Rev. C, 19C3096-Rev. C, and 19C3106-Rev. A, which I understand represent the

instructions being used for fabrication. These differ in part from the earlier versions and my marks, but I do not find the differences to be unacceptable.

Calculations, Group A, were based on weights supplied by you (which I was able to verify in part) and criteria also supplied by you which are cited on sheet 2. Particularly note the John Harris letter on Earthquake Safety which established a criterion for "static" seismic horizontal load of .70 G, and the PBQ & D/KE "Fact Sheet" for Equipment Support. These were used as design criteria. If further investigation has led to revision of these criteria, we should check to see if that would impact the design. Please let me know if such a further review is necessary.

Sheets 17, 18, 20 and 21 of Calculations "A" refer to the problem of transfer of vertical and shearing loads to the concrete floor slab. Analysis was based on the structure analysis of the earlier sheets plus the PBQ & D/KE "Fact Sheet". Some recommendations for revision were made to get sufficient spread of vertical pressures and to effect transfer of shear. I understand you have implemented these or similar steps, but have not had the details to review further.

MAGNET LEG WELDS

In September 1979, you asked an opinion on the effect of using less than fully continuous welds at field connections of the magnet legs. Calculation sheets, Group "B" reflect my investigation of that problem. On October 1, 1979, I advised you that I could find no structural objection to limiting the welds as shown on the concluding sheet. I suggested at that time that you verify that the individual supports for the magnet leg could take 100% of the weight and that the support blocks can also take uplift forces from overturning (see sheet 4 of 8). You indicated that you would verify these things.

Please let me know if and when I can be of further service.

Yours very truly,

Sol E. Cooper, Str. Engr.

SEC/rb

Encl.

SOL E. COOPER
STRUCTURAL ENGINEER

LBL - PEP4 - TPC	JOB No.	SHEET No. 1 of 21
	DESIGNED BY	DATE 8/30/78
	APPROVED	

STRUCTURAL CHECK OF SUPPORT STRUCTURE FOR TIME PROJECTION CHAMBER (TPC)

THE TPC SUPPORT STRUCTURE CONSISTS OF 2 PERIMETER GIRDERS (LONG'L) AND 2 PERIMETER BRACING FRAMES WELDED TO THE END FRAME OF THE TPC. TPC STRUCTURE CONSISTS OF A DOUBLE LAYER OF 12" THICK ABSORBER FORMING 2 HEXAGONS AROUND A MAGNETIC CORE, PLUS 2 END FRAMES. WITH THE MAGNETIC CORE AND ASSOCIATED EQUIPMENT, THE TPC WEIGHS 860 TONS, WITH THE 40 TONS ± OF SUPPORT STRUCTURE, TOTAL WEIGHT TO BASE = 900 TONS.

ASSUME (TO BE CHECKED SEPARATELY)

1. TPC STRUCTURE IS INTERNALLY SUFFICIENT, IS VERY RIGID GEOMETRICALLY AND CAN SPAN ITS OWN WEIGHT PLUS INTERNAL SEISMIC EFFECTS TO THE FOUR CORNERS OF THE SUPPORT FRAME.
2. SHEAR KEYS AT LOWER CORNERS AND THEIR EMBEDMENT IN THE CONCRETE FLOOR ARE ABLE TO TRANSFER THE TOTAL SEISMIC SHEAR TO THE CONCRETE; DETAILS SUCH AS TO RESIST SHEAR EQUALLY AT THE FOUR CORNERS
3. CONCRETE SLAB AND COVER PLATE CAN SAFELY SUPPORT THE MAXIMUM REACTION.
4. SPECIFICATIONS WILL PROVIDE FOR ACCEPTABLE PROCEDURES FOR WELDING OF THE HEAVY WELDMENTS INVOLVED.

SOL E. COOPER
STRUCTURAL ENGINEER

LBL - PEP4 - TPC	JOB NO.	SHEET NO. 2
	DESIGNED BY LBL	DATE 8/30/78
	APPROVED	

DESIGN CRITERIA

1. DATA TAKING MODE (OPERATING POSITION)

   DEAD WEIGHT IN PLACE ON 4 EQUALIZED BASE POINTS
   0.70 G (STATIC EQUIV.) SEISMIC FORCE APPLIED IN ANY HORIZONTAL DIRECTION. (MAX. VERT. ACC. << HOR., ASSUMED NOT COINCIDING.)
   DESIGN STRESSES PER UBC - 1976

2. ROLLING MODE

   DEAD WEIGHT ON 4 OR 2 CORNER ROLLERS
   ACCELERATION LOW - (SAY .05 G)
   NO SEISMIC LOADS

3. SERVICING MODE - SIMILAR TO "DATA TAKING"

MATERIALS

STEEL - ASTM A 441
BASE TUBING AISI 1026
E 70 WELDING RODS
HEX. FRAME - AISI 1025

FOR BOLTS - HEX. FRAME TO ABSORBERS
ASTM A 574
$F_y = 153$ $F_{ULT} = 170$
$(F_v)_y = 89$ $(F_v)_{ULT} = 110$

REFER - DESIGN DRAWINGS IN PROCESS REC'D 8/29/78
BY LBL - #19C 3076 - PEP 4 - SUPPORT STRUCTURE WELDMENT - SUPPORT HALF
19 C 3086 - SUPPORT HALF ASS'Y - NORTH END
19 C 3096 - SUPPORT HALF ASS'Y - SOUTH END

EARLIER LBL DRAWINGS USED AS GENERAL BACKGROUND BUT SUPERSEDED IN WHOLE OR PART
REC'D 7/17/78 - 19 C 1886 - HEX FRAME WELDMENT - NORTH END
19C - 0916 B - GENERAL ARR'GT - 1st QUAD
19 C 0926 B - GENERAL ARR'G'T - ELEVATIONS

PB Q&D/K.E - FACT SHEET AND EQUIP'T. SUPPORT DATA - 2/23/78 - 6 Sheets

EARTHQUAKE SAFETY OF PEP DETECTORS - JOHN HARRIS 10/4/77

SOL E. COOPER
STRUCTURAL ENGINEER

LBL - PEP 4 - TPC	JOB No.	SHEET No. 3
	DESIGNED BY LBL	DATE 8/30/78
	APPROVED	

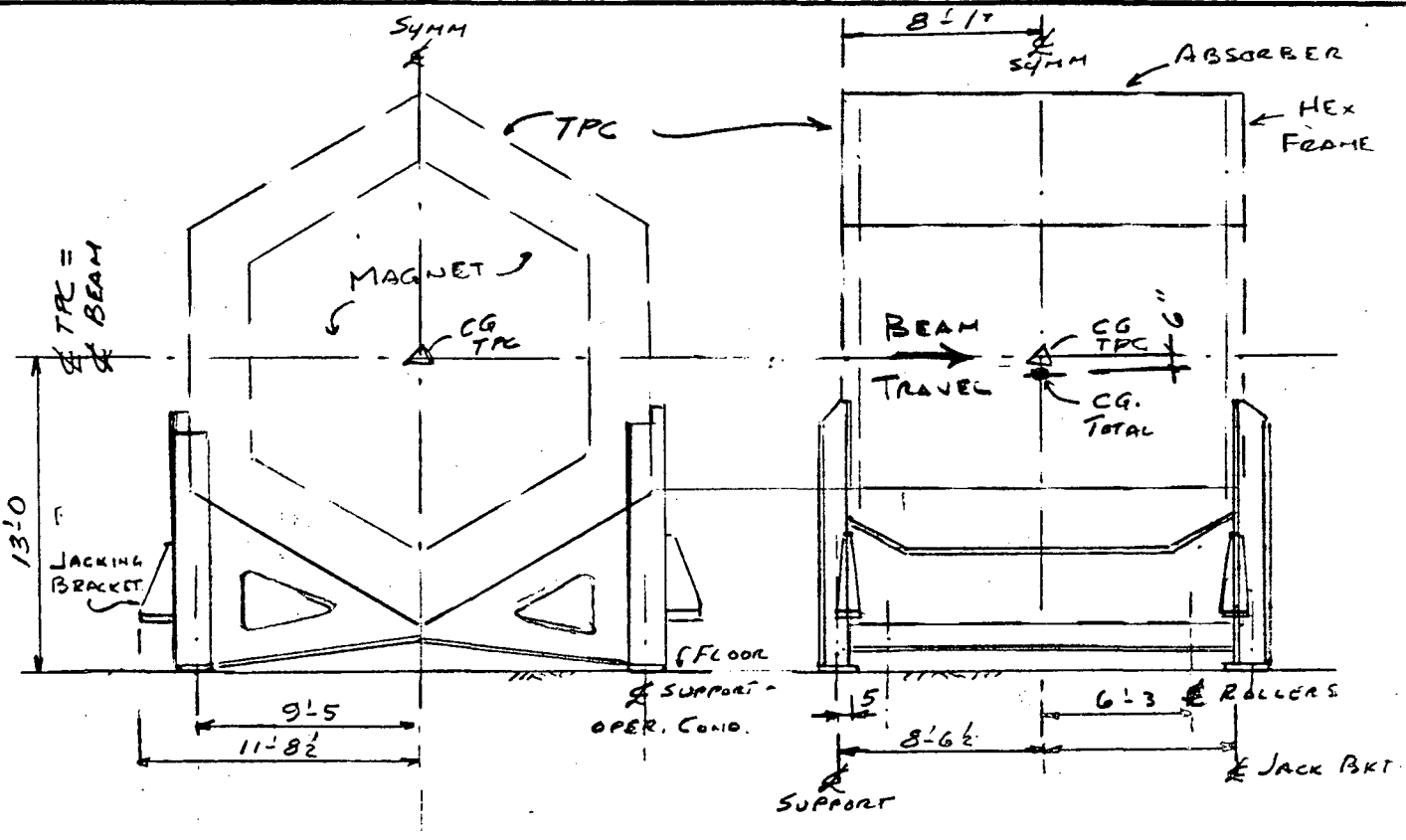

TOTAL WT., (TPC + SUPPORT) = 1800^k (See Next sheet)

REACTION, EQUALLY DISTRIB = (450^k/CORNER) x4

MAX = (900^k/CORNER) x2

TO ASSURE EVENLY DISTRIBUTED OPERATING LOAD PROVIDE TIGHT SHIMS AIDED BY JACKING AT INSTALLATION

SOL E. COOPER
STRUCTURAL ENGINEER

LBL - PEP4 - TPC	JOB NO.	SHEET NO. 4
	DESIGNED BY	DATE 8/30/78
	APPROVED	

WEIGHTS

TPC*

			WT.	ELEV. (FROM BASE ℄, FT.)	
MAGNETS	MAGNET YOKES	300K			
	POLE PIECE	240			
	INTERNAL EQUIP'T	140			
	MISC	60			
			740K		
	INNER ABSORBER 6 @ 37T x 2	444K			
	OUTER ABSORBER 6 @ 39T x 2	468K			
	HEX FRAMES 2 @ 20T x 2	80			
			992		
	TOTAL TPC		1732K	13.0 FT	22,516
	SUPPORT FRAME, COMPLETE		70K	2	146
	TOTAL		1802	12.52'	22,556

SEISMIC FORCE @ .7G = 1261K

MOT (REFERRED TO BASE)

1261 (12.5) = 15,762 'K

MSTAB, TRANS = 1800 (9.42) = 16956

LONG'L. = 1800 (8.75) = 15,750

DIAG. = 1800 (12.71) = 22,880

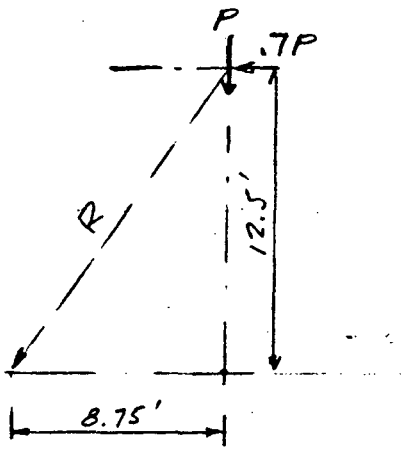

Note

For trans. O.T., Dist. ℄ Assy to ℄ SUPPORTS = 9.42' > 8.75'

For long'l O.T. = 8.6 < 8.75

BUT 8.75' IS WITHIN SUPPORT

SOL E. COOPER
STRUCTURAL ENGINEER

LBL - PEP4 - TPC	JOB NO.	SHEET NO. 5
	DESIGNED BY LBL	DATE 8/30/78
	APPROVED	

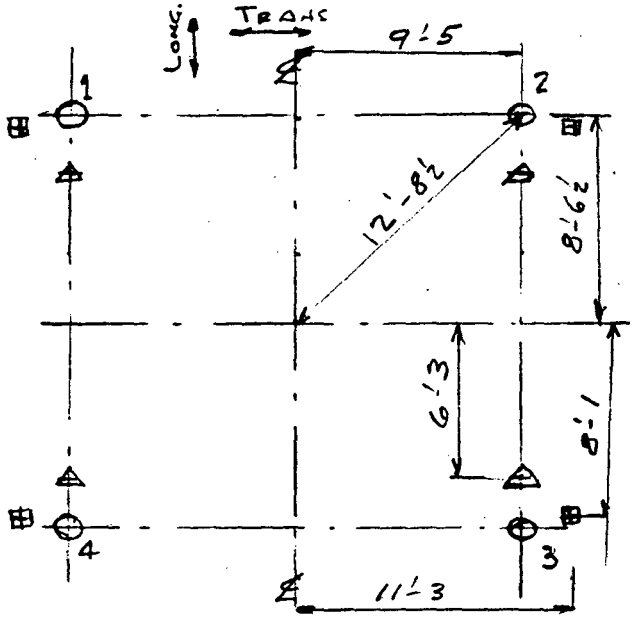

⊕ = OPER. CONDITION
⊞ = JACKING
△ = ROLLERS

REACTIONS - OPER CONDITION + E.Q

		REACTION, (KIPS) 1	2	3	4
1. DEAD WEIGHT		450	450	450	450
2. TRANS E.Q.	a.	418	-418	-418	418
	b.	-418	+418	+418	-418
3. LONG'L EQ	a	+450	+450	-450	-450
	b.	-450	-450	+450	+450
4. DIAG. E.Q.*	a	-450	-170	+790	-170
	b	-170	-450	-170	+790
	c	+790	-170	-450	-170
	d	-170	+790	-170	-450
1 + 2	MAX	868	868	868	868
	MIN	32	32	32	32
1 + 3	MAX	← 900 →			
	MIN	0			
1 + 4*	MAX.	1240			
	INT.	280			
	MIN	0			
Shear SEISMIC-Direct		315	315	315	315
1' eccentricity		24	24	24	24
V_{MAX} →		332	332	332	332

MAX. R TO ROLLER -
ASSUME 1800K ON ONE ROLLER + 1 JACK BKT
(NO E.Q.)

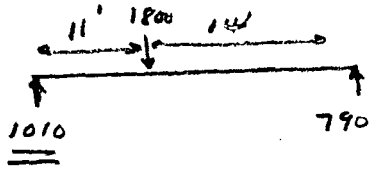

* See Next sheet

SOL E. COOPER
STRUCTURAL ENGINEER

LBL - TPC - PEP4	JOB No.	SHEET No. 6
	DESIGNED BY	DATE 8/30/78
	APPROVED	

DIAGONAL E.Q. + DEAD WEIGHT

AT INCIPIENT UPLIFT, ONE CORNER

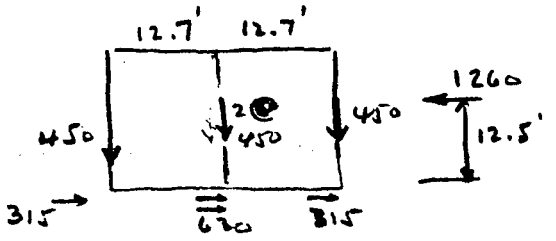

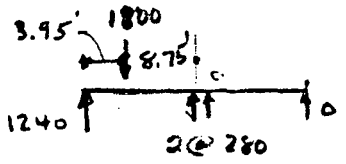

$\Sigma R = 1800$

$\Sigma M = 1240(12.7) - 1800(8.75) = 0$

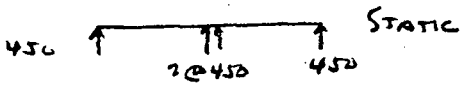

STATIC

+

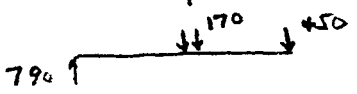

E.Q
O.T.

SOL E. COOPER
STRUCTURAL ENGINEER

LBL - PEP4 - TPC	JOB No.	SHEET No. 7
	DESIGNED BY	DATE 8/30/78
	APPROVED	

LONGITUDINAL GIRDER

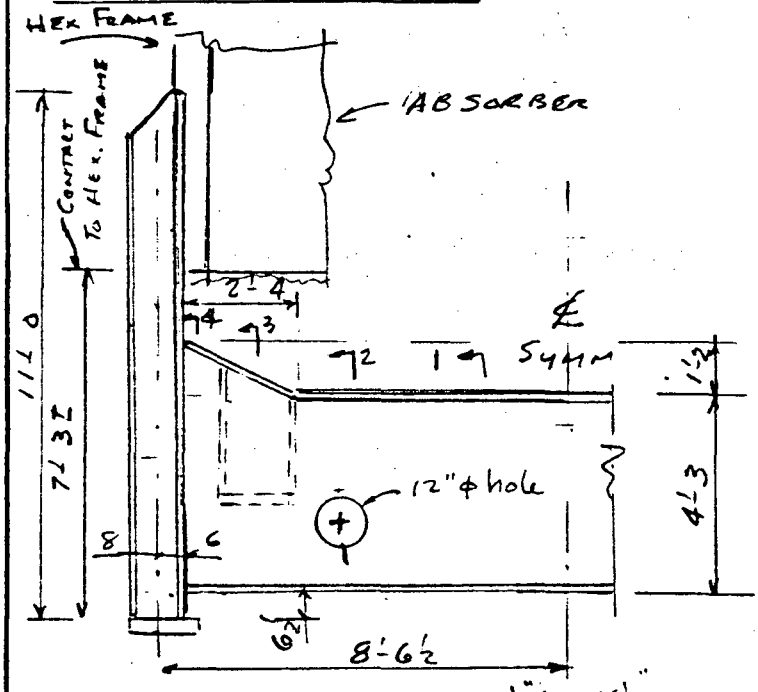

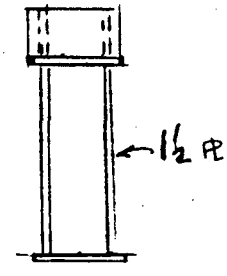

A441 Steel

F_y = 46 ; ¾" to 1½" PL
42 1½" + to 4"

f_b @ .66 F_y 1½" PL 30.4 ksi
@ .6 27.6

f_v @ .4 F_y = 18.4

$\frac{h}{t} = \frac{48}{1.5} = 32$ (low)
use .4 F_y

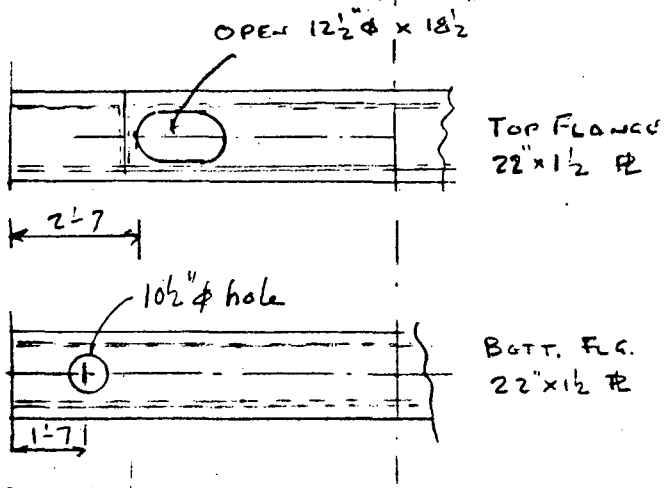

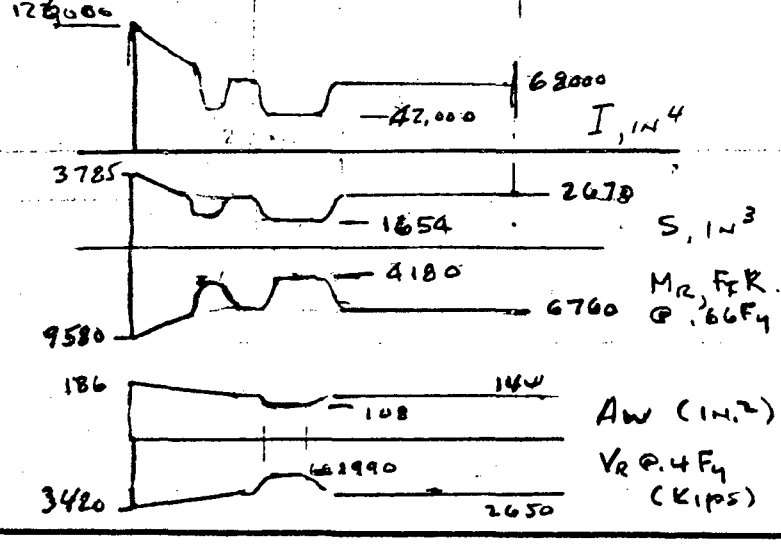

SECT. 1	A	I	S
FLG's 2@22x1½	66	40,425	
Webs 2@48x1½	144	27650	
	210	68,075	2670

SECT 2			
FLGS 2 @ 9½x1½*	29	17,460	
WEB 2@ 36½x½	108	24,730	
		42,190	1654

* Note: Propose add cover plates

SECT 3

SIM TO 2, BUT GREATER

SECT 4			
FLGS	66	66,500	
WEB, 2@62x½	186	59580	
		126,000	3885

SOL E. COOPER
STRUCTURAL ENGINEER

LBL - PEP4 - TPC	JOB No.	SHEET No. 8
	DESIGNED BY	DATE 8/30/78
	APPROVED	

DEAD WEIGHT ON GIRDER - (OPER. COND.)

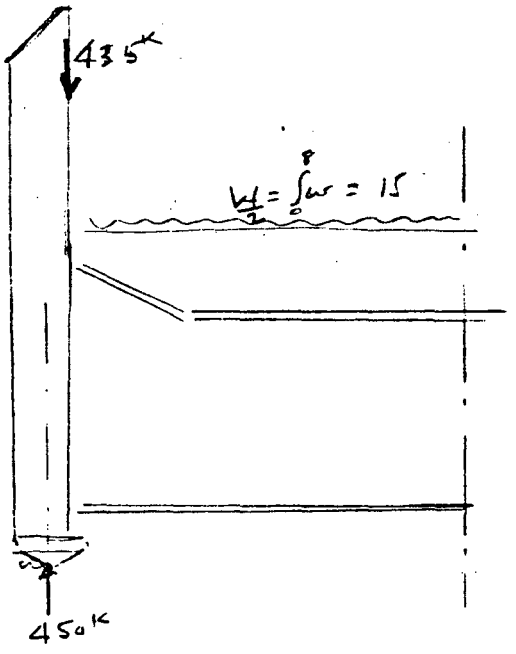

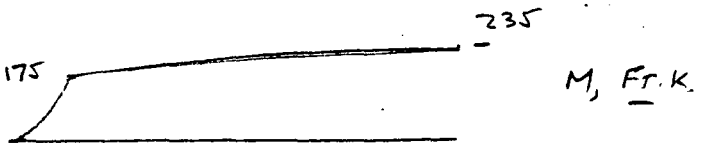

SOL E. COOPER
STRUCTURAL ENGINEER

LBL - PEP4 - TPC	JOB No.	SHEET No. 9
	DESIGNED BY	DATE 8/30/78
	APPROVED	

LONG'L E.Q. ON GIRDER

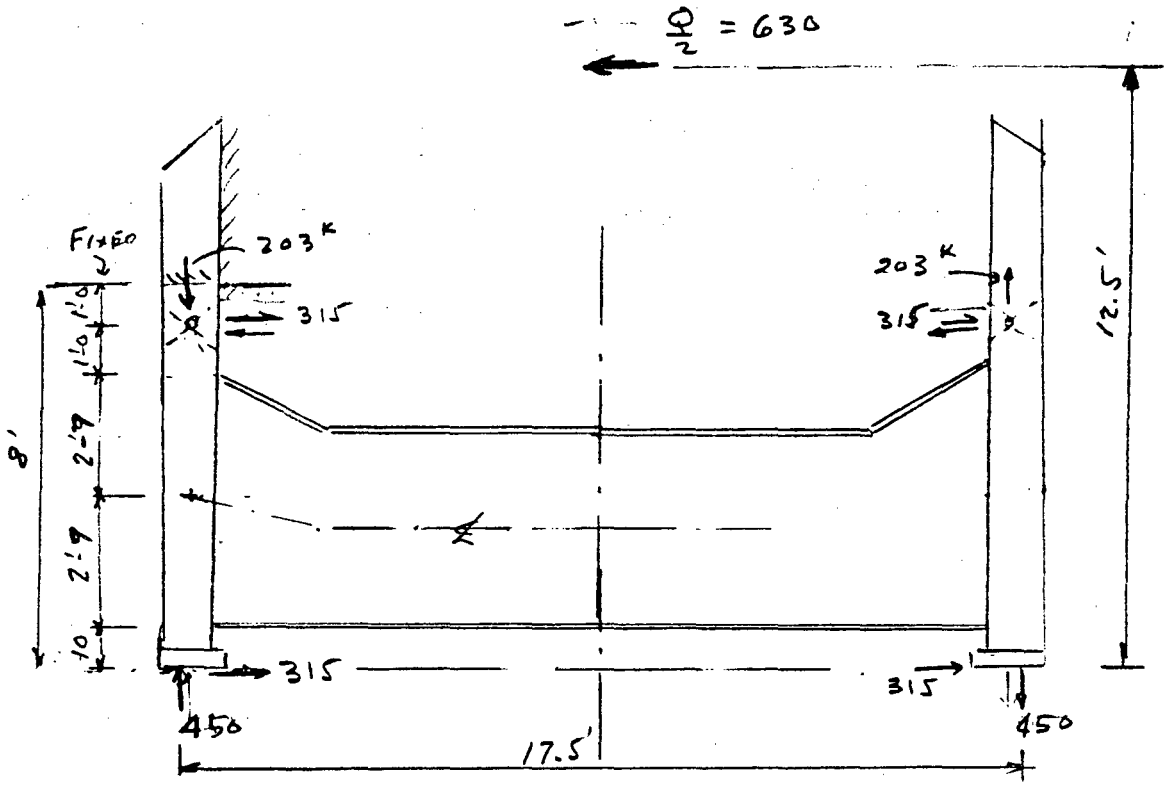

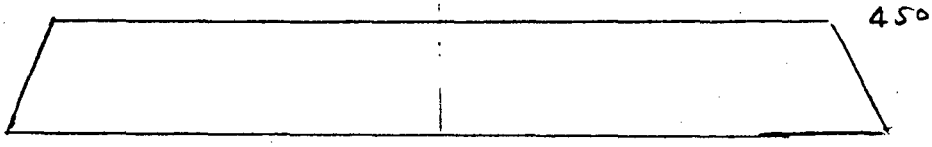

V, KIPS

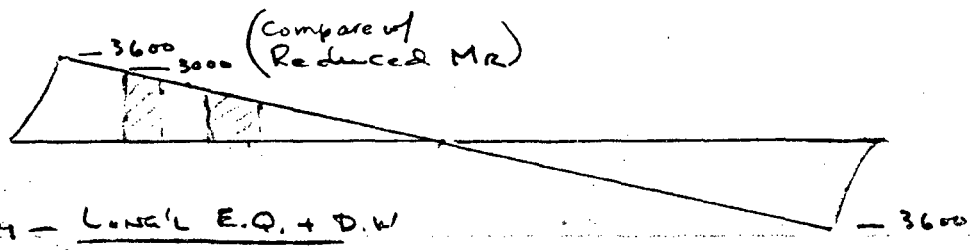

M, FT. KIPS

SUMMARY - LONG'L E.Q. + D.W

$V_{MAX} \leq 465$

$\frac{V_{MAX}}{V_R} \leq \frac{465}{1990(1.33)} = .18 << 1$ OK ✓

LONG'L WELD $\frac{VQ}{I} = \frac{465(33)(24)}{74,580}$

$= 5.2$ K/IN.

Say $\frac{5.2}{.18} = 29$ K/IN

$\frac{5}{8} \rightarrow = 26$ K/IN

$M_{MAX} \leq 3800^{K}$

$\frac{M_{MAX}}{M_{R_{MIN}}} = \frac{3200}{4180(1.33)} = .58 < 1$ OK, but suggest doubler pl's. to balance safety factor at holes. (8/80 - WIDENED PLATE AT HOLES)

SOL E. COOPER
STRUCTURAL ENGINEER

LBL - PEP 4 - TPC	JOB No.	SHEET No. 10
	DESIGNED BY	DATE 9/1/78
	APPROVED	

DIAG. E.Q. - LONG'L GIRDER

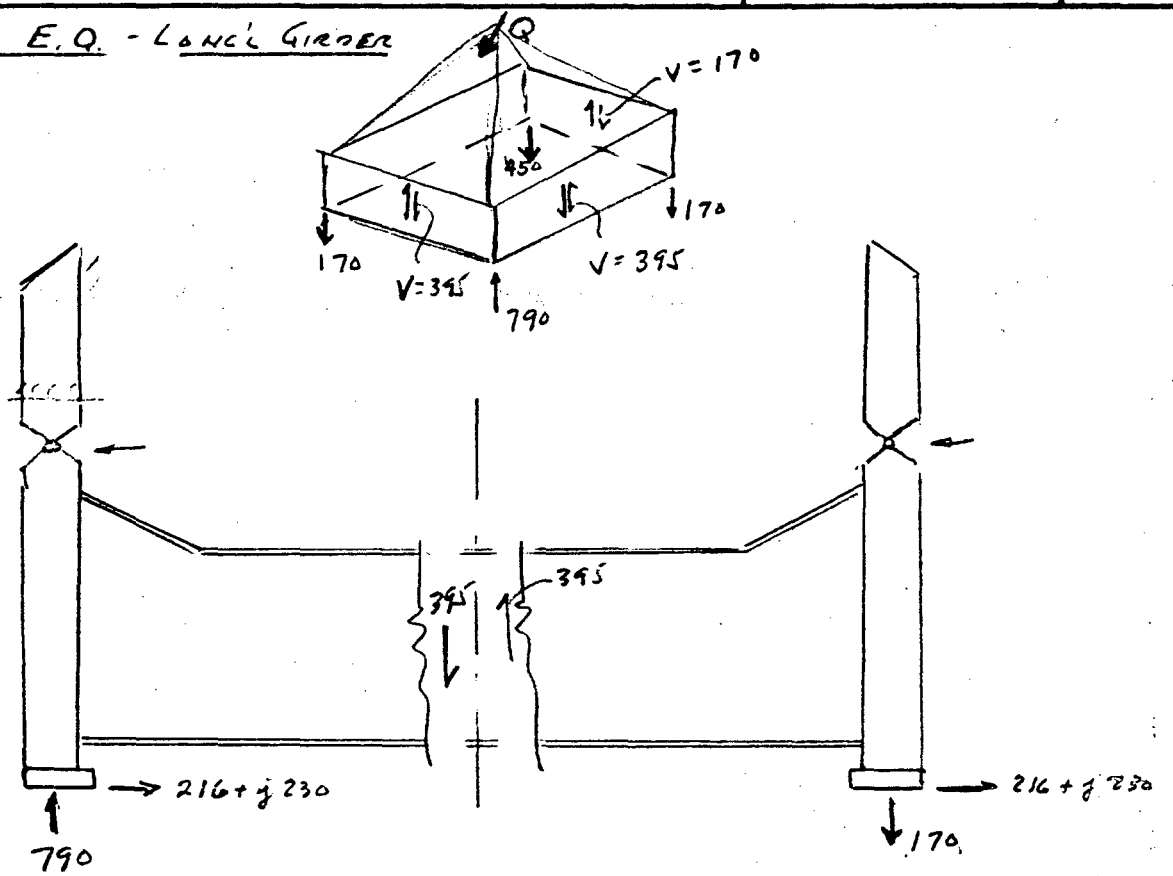

Shear and Mom. < Long'l E.Q.

(See also effect on transverse frame)

SOL E. COOPER
STRUCTURAL ENGINEER

LBL - PEP4 - TPC	JOB NO.	SHEET NO. 11
	DESIGNED BY	DATE 9/1/78
	APPROVED	

ROLLER SUPPORT: CONDITION - 4 EQUALIZED SUPPORTS

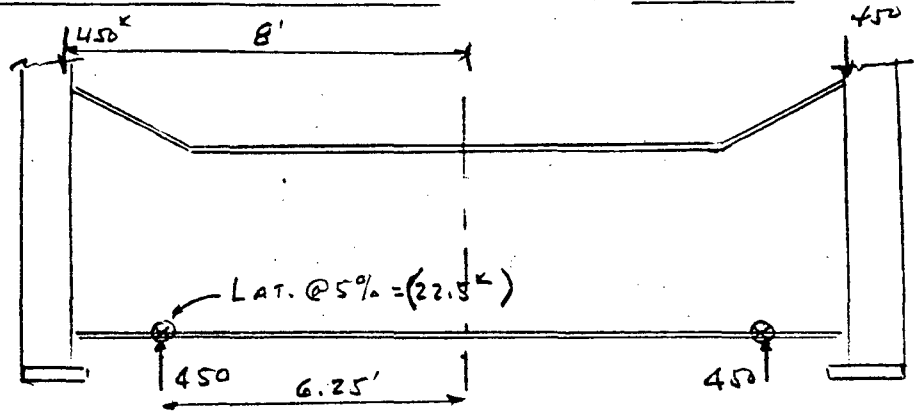

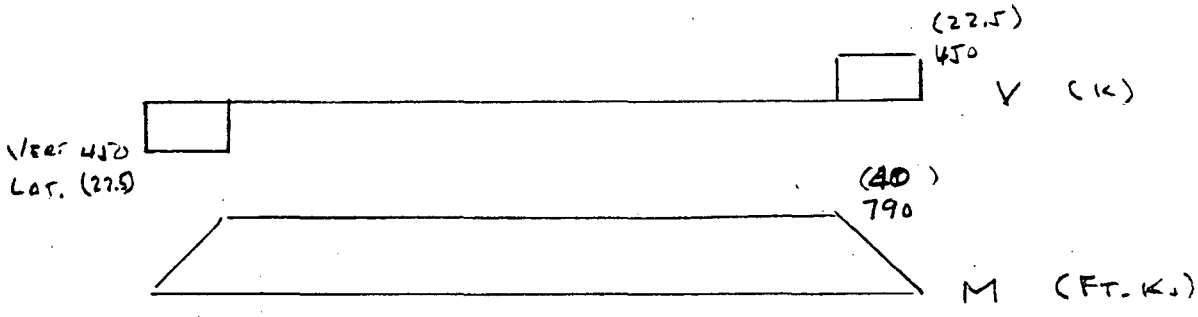

VERTICAL V & M - COMPARE TO V_R & M_R, PREVIOUS SHEET
(1990) (4200)

LATERAL

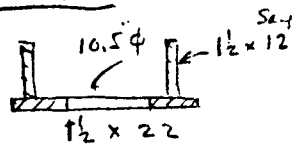

$A_v = \overset{Net}{10.5}\,(1.5) = 15.75$

$I = 1158 + 2160 - 150 = 3170$

$S = 288$

$f_v = \frac{22.5}{15.8} = 1.42 << .4\,F_y$

$f_b = \frac{40(12)}{288} = 1.67 << .6\,F_y$

SOL E. COOPER
STRUCTURAL ENGINEER

LBL - PEP4 - TPC	JOB No.	SHEET No. 12
	DESIGNED BY	DATE 9/1/78
	APPROVED	

ROLLER SUPPORT CONDITION - 2 SUPORTS - DIAGONALLY OPPOSITE

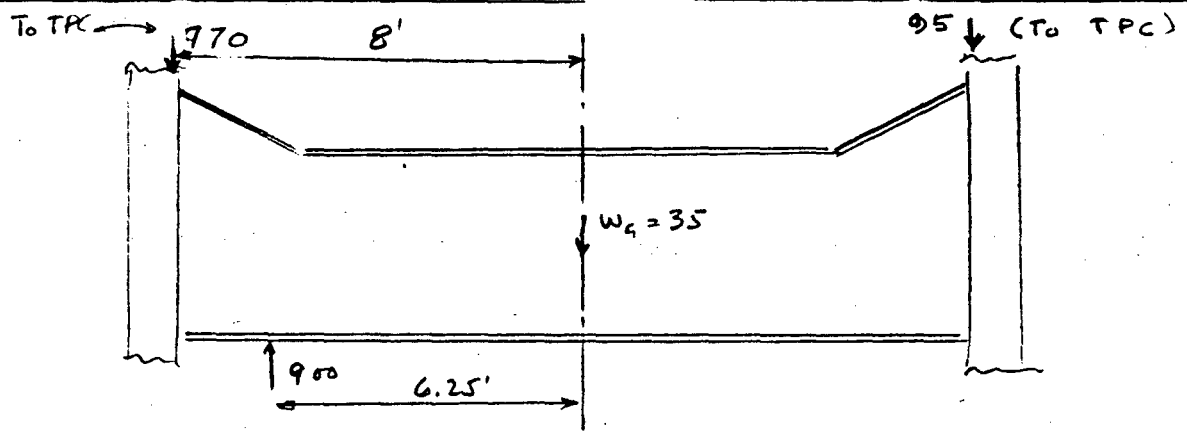

$V = 800^K \ll V_R = 1990$

$M = 1400^{K'} \ll M_R = 3300$

CHECK EFFECT OF TORSION ON TPC STRUCTURE (ASSUMING SUPPORT X FRAME AND GIRDERS DO NOT RESIST THIS TORSION)

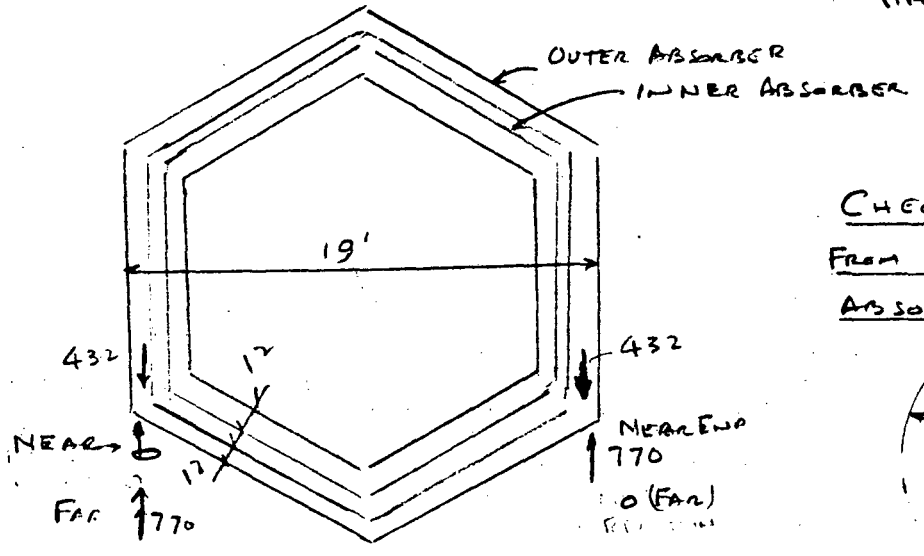

CHECK TORQUE ON BOLTS FROM HEX FRAME TO ABSORBERS

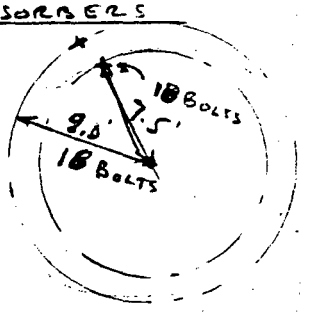

TORSION $= (770 - 430)17 = 5780^{'K}$

FOR ORDER OF MAGNITUDE OF SHEAR

Say 60% to OUTER ABSORBER $= 3470^{'K}$

APPROX AS 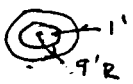 1' 9'R

$$\tau = \frac{2Tr_1}{\pi(r_1^4 - r_2^4)} = \frac{2(3470)(9)}{\pi(9^4 - 8^4)} = 8.1^{K}/\square'' = .06^{K}/\square''$$

ok

$$\frac{5780^{'K}}{9\left[18\left(1 + \frac{7.5}{9}\right)\right]} = 19.5^{K}/\text{BOLT}$$

2"ϕ - ASTM A574

$F_y = 153$ ksi

$F_{ULT} = 170$

$(F_v)_{ULT} = .65(170) = 110$ ksi

$(F_v)_y = .58(153) = 89$ ksi

IF NO THREADS IN SHEAR PLANE

$$f_v = \frac{V}{A_t} = \frac{19.5}{2.5} = 7.80 \text{ ksi}$$

if $f_t = 20$

$$(F_v)_{max} = \sqrt{\left(\frac{20}{2}\right)^2 + (7.8)^2} = 12.7^{ksi} = .14(F_v)_y$$

SOL E. COOPER
STRUCTURAL ENGINEER

LBL - PEP4 - TPC	JOB No.	SHEET No. 13
	DESIGNED BY	DATE 9/1/78
	APPROVED	

ALTERNATE

CHECK TORSION IF TRAVELLING THRU LONG'L BOX GIRDERS

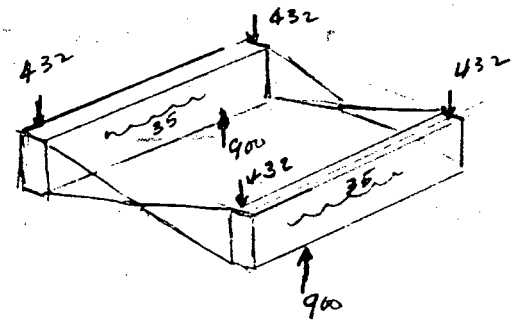

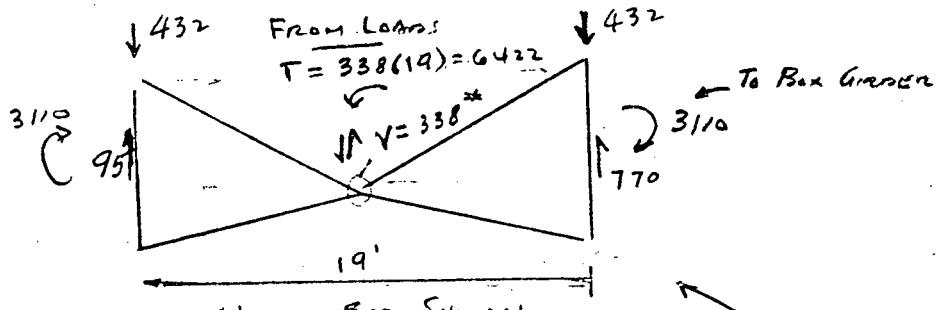

NEAR END SHOWN
FAR END OPPOSITE

* For Transverse E.Q., Shear = 418^k > 338 (See later sheet). Case is similar except resisting moment is delivered by a couple, utilizing the base shear connectors and the box frame connection.

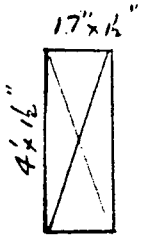

Shear flow $= \frac{T}{2A}$

$= \frac{3110(12)}{2(48)(17)} = 23^{k/in}$

$(f_v)_T = 15.25$ ksi. $< .4F_y = 18.4$ ...

And from Vert Loads

$f_v = \frac{770}{3(51)} = 5.03$

$\Sigma f_v = 20.3 > 18.4$ but OK for extreme case.

BUT REINFORCE AT HOLES.

SOL E. COOPER
STRUCTURAL ENGINEER

LBL - PEP 4 - TPC	JOB NO.	SHEET NO. 14
	DESIGNED BY	DATE 9/1/78
	APPROVED	

CHECK TORQUE THRU HEX. FRAME AND TRANSVERSE LOWER FRAME

VOID

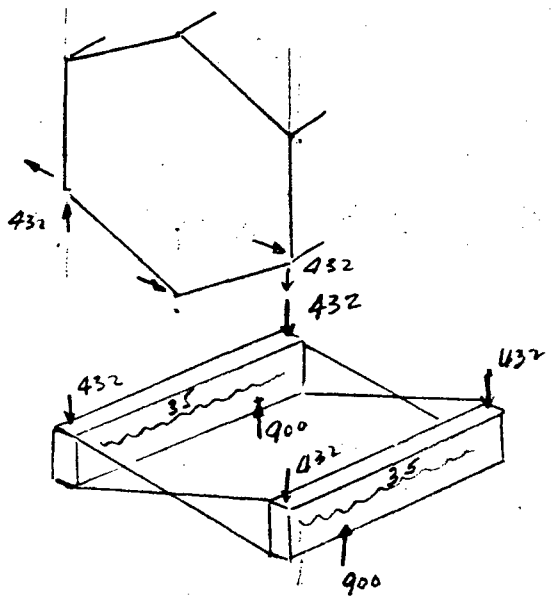

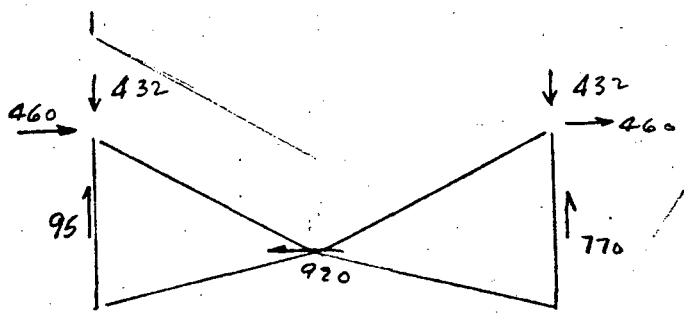

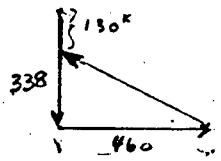

SOL E. COOPER
STRUCTURAL ENGINEER

	JOB NO.	SHEET NO. 15
LBL - PEP4 - TPC	DESIGNED BY	DATE 9/1/78
	APPROVED	

TRANSVERSE FRAME

DEAD WEIGHT

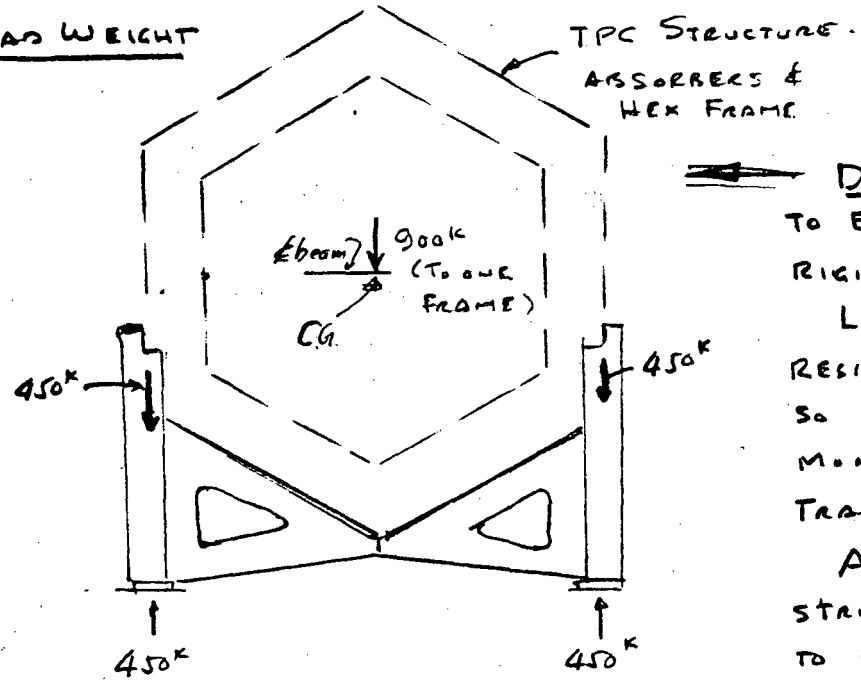

DEAD WEIGHT IS TRANSFERRED TO END PYLONS BY STRUCTURAL RIGIDITY OF TPC STRUCTURE

LONG'L ECCENTRICITY IS RESISTED BY LONG'L GIRDERS; SO THERE IS NO SHEAR OR MOMENT EFFECT ON TRANSVERSE FRAME

ASSUMPTION THAT TPC STRUCTURE CAN SPAN LOAD TO PYLONS IS BASIC TO STRUCTURAL CONCEPT. IF THAT STRUCTURE HAS NOT BEEN CHECKED, IT SHOULD BE - BY LBL (OR BY MYSELF IF WORK AUTHORIZED)

TO CONSIDER LATERAL RESISTANCE:
NOTE THAT THE SUPPORT FRAME IS WELDED TO THE MASSIVE HEX FRAME WHICH IS 7½" THICK BY 12" MIN. PRIMARILY THE CROSS FRAME ACTS TO TRANSFER THE BASE SHEAR TO THE HEX FRAME AS A BRACE

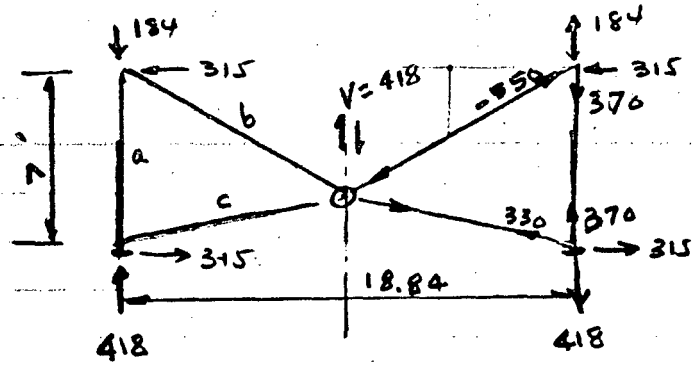

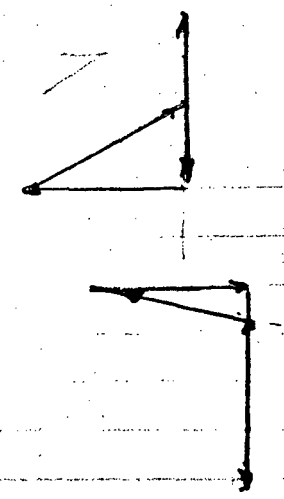

SOL E. COOPER
STRUCTURAL ENGINEER

	JOB NO.	SHEET NO. 16
LBL - PEP 4 - TPC	DESIGNED BY	DATE 9/1/78
	APPROVED	

Member "a" ← To Long'l Girder

$P = \pm 418\ (+450)$

$L/r \Rightarrow 0$

Consider

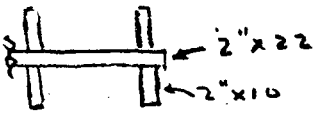

$A \geq 44 + 80 = 124^{\square''}$

$\frac{968}{128} = f_c$ or f_t → Very low

Member "b"

$P = \pm 550$; $l/r = 0$

$A > 7.5(12) = 90^{\square''}$

$f < 6.1$ ksi → very low

Member "c"

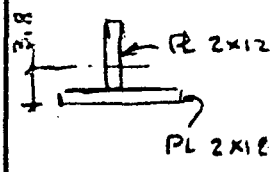

$P = \pm 330^k$ $F_y = 42$

$L \approx 110''$

	A	d	Ad	I_x	I_y	r_x	r_y	b/t
Fl 2x18	36	1	36	282	972			6
Web 2x12	24	8	192	288 / 423	—			4
	60	3.8	228	1005	972	4.09	4.02	

$\frac{l}{r} = 27.4$; $F_a = 23(1.33) = 30.6$

$\frac{P}{A} = 5.5$ ksi $<< 30.6$

At ℄ for Shear

If 2" x 15" web only used, (ignoring hex. frame.

$\frac{V}{A_v} = \frac{418}{30} = 13.9$

$F_v = .4(42)(1.33)$

$= 22.3 >> 13.9$

Transverse frame OK.

Check stability of elements and shear transfer on drawings

SOL E. COOPER
STRUCTURAL ENGINEER

LBL - PEP4 - TPC	JOB NO.	SHEET NO. 17
	DESIGNED BY	DATE 9/2/78
	APPROVED	

REACTIONS TO FLOOR PLATE AND SLAB

OPER. CONDITION 450K
ROLLER MAX 900K (1010 FOR SPECIAL CASE)
E.Q. - OPERATING CONDITION - 1240K MAX.
SPACING 19' OR 17'

PER PBQ&D Notes 2/23/78 - See curve - LOAD VS. BRG. PL. DIMENSION
" VS. SPACING

For Seismic load, use equivalent * .75 (1240) = 930K
For round plate, use $\frac{4}{\pi}$ x DIMENSION "A" = DIA.
Then required dia. = $\frac{4}{\pi}$ (43) = 55"

To spread reaction from 16" O.D. BASE TUBE TO 55" O.D. Plate, determine "t" at f_{max} = .75 f_y = 30 ksi

Roark - Chap 10 - Case 11

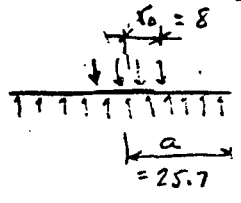

$\frac{1}{\text{Poisson}} = m = \frac{1}{\nu} \approx 4$

for f at ctr, $f_r = f_t = -\frac{3W}{2\pi m t^2}\left[(m+1)\ln\frac{a}{r_0} + \frac{1}{4}(m-1)\left(1-\frac{r_0^2}{a^2}\right)\right]$

$$t^2 = \frac{3(930)}{2\pi(4)(30)}\left[5\ln\frac{25.7}{8} + \frac{3}{4}\left(1-\left(\frac{8}{27.5}\right)^2\right)\right]$$

$$= 3.70\left[5.84 + \frac{3}{4}(.92)\right] = \underline{24.16}$$

at r_0 $f_r = -\frac{3W}{2\pi m t^2}\left\{(m+1)\ln\frac{a}{r_0} + \frac{1}{4}\left(1-\frac{r_0^2}{a^2}\right)\left[(m-1)-(3m+1)\right]\right\}$

$$t^2 = 3.70\left[5.84 + \frac{.92}{4}(-10)\right]$$

$$= 13.1 < 24.2$$

use $\underline{t = 5"}$ (4" OK WITH YIELD ALLOWED NEAR CENTER)

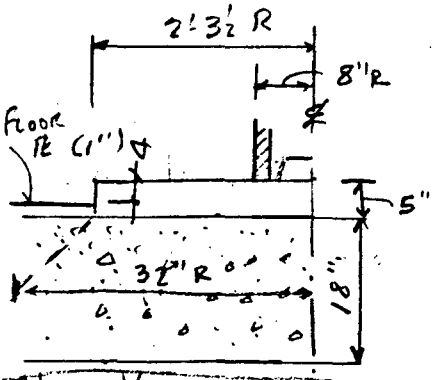

Details on drawings do not allow for plate thickness required. Propose revision

Check V_c @ 32" R

$64\pi(18)v_c = \frac{V_u}{.85} = 3620 \quad v_c = [1.4(450)+1.8(790)]\frac{1}{.85} = 2911^K$

$v_c \overset{?}{\leq} 670$ psi. ; allow $6\sqrt{f'_c} = 380 < 670$

BUT REDUCED BY BEARING

SOL E. COOPER
STRUCTURAL ENGINEER

LBL - PEP4 - TPC	JOB No.	SHEET No. 18
	DESIGNED BY	DATE 9/2/78
	APPROVED	

TRANSFER OF Hor. SHEAR TO CONCRETE SLAB

EXISTING

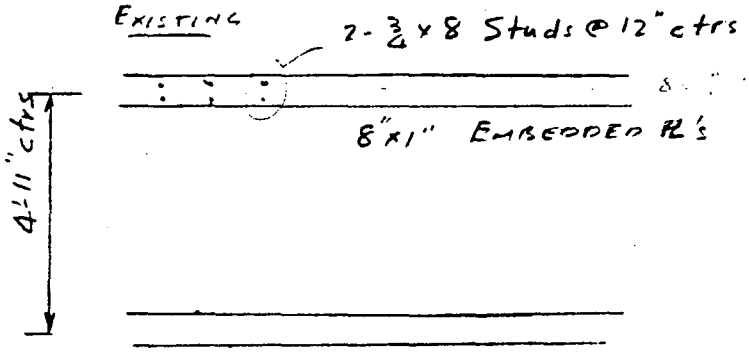

Q ∥ to Plates

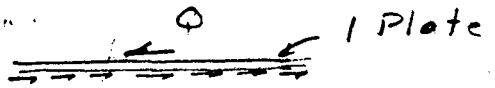

$Q = 330$ max (Per PBQD manual)

$T = \frac{330}{2} = 150 = C$

$f_t = f_c = \frac{150}{8} = 18.75$ psi

Note in our Case

$\frac{3}{4} V_{EQ} = \frac{3}{4}(332) = 249^k < 330$

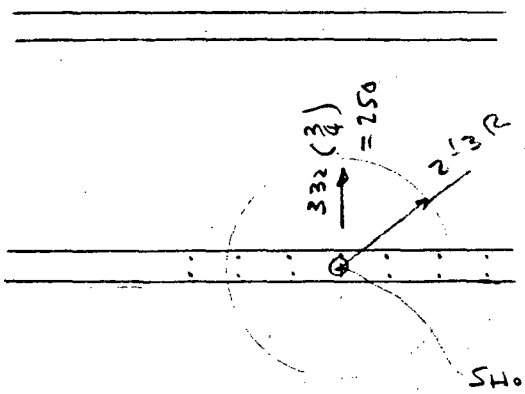

Q ⊥ Transv. to Plates

if base plate as shown 14 Studs activated.

PBQD gives value $\frac{53}{4} = 13.25^k$ per stud

$14(13.25) = 186^k < 250$

ENGAGE AT LEAST 6 MORE STUDS BY STRUTTING TO ONE OR MORE ADDITIONAL 8x1 PLS OR BY ENLARGING BASE PLATE.

Shown at ctr. of pl. May not be

ALT – Drill in new Anchors.

SOL E. COOPER
STRUCTURAL ENGINEER

LBL - PEP 4 - TPC	JOB NO.	SHEET NO. 19
	DESIGNED BY	DATE 9/2/78
	APPROVED	

CHECK JACKING BRACKET

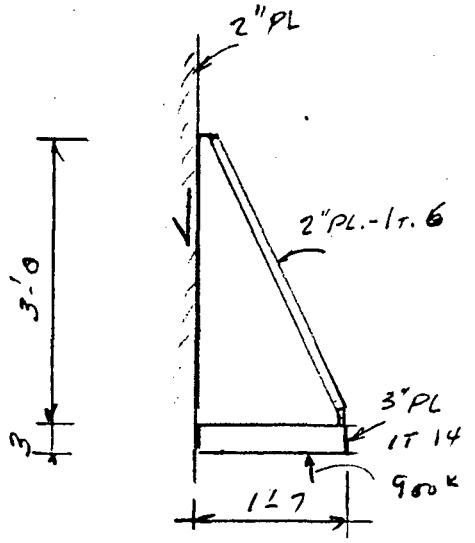

JACK MAY BE SET ANYWHERE ON 1T.14. MAX LOAD 900K

1T 14 IS NOT DEVELOPED IN TENSION. SO CHECK VERTICAL PL AND WELD FOR FULL MOMENT AND SHEAR

TO ONE PL 1T.6

$V_{MAX} = 900^K$

$M_{MAX} = 900\,(15) = 1350^{'K}$

$f_v = \dfrac{900}{36(2)} = 12.5$ ksi

$f_t = \dfrac{1350\,(6)}{(36)^2(2)} = 3.13$ ksi

OK

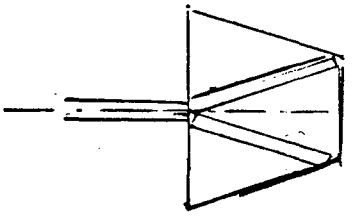

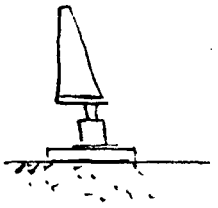

NOTE:
JACKING FORCE OF 900K REQUIRES HEAVY BASE PL ON FLOOR SIM. TO OPERATING CONDITION SUPPORT

SOL E. COOPER
STRUCTURAL ENGINEER

LBL - PEP4 - TPC	JOB NO.	SHEET NO. 20
	DESIGNED BY	DATE 9/2/78
	APPROVED	

CHECK HOR. SHEAR TRANSFER AT BASE TUBE - (JT. 19)

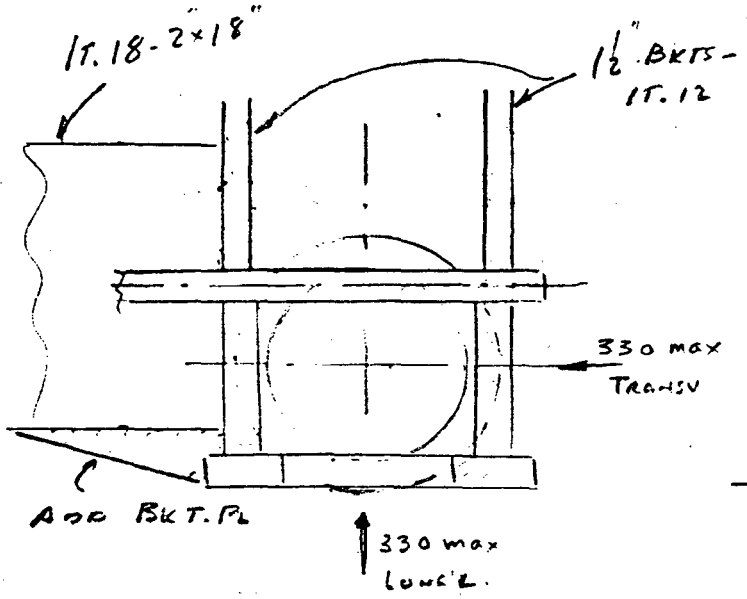

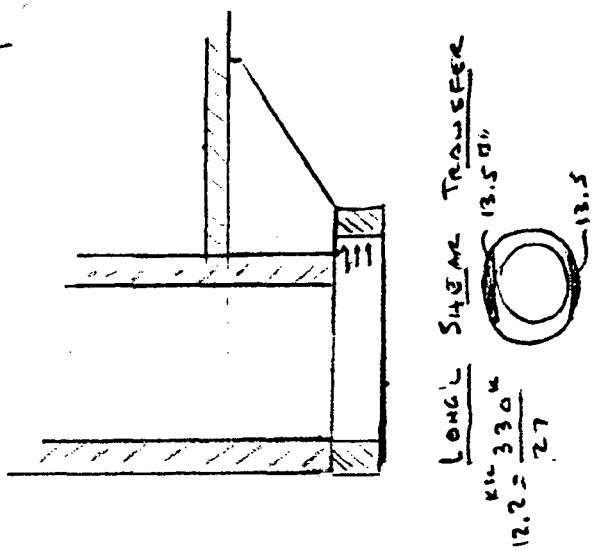

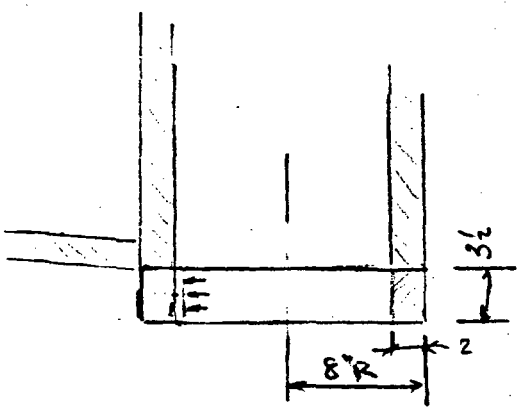

TRANS. SHEAR = 330^k

$\frac{330^k}{F_v = 21(1.3)}$ = 12 □" REQ'D IN WELD

AVAILABLE

OK.

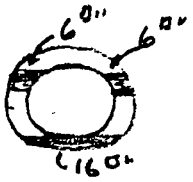

CHECK MOMENT ON 1T.18

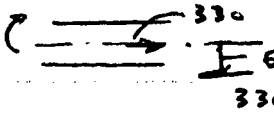

$M = 1650^{'k}$

$f_b = \frac{1650(6)}{(18)^2(2)} = 15.3$ ksi

$f_{Ax} < \frac{330}{36} = 9.17$

COMBINATION OK.

SOL E. COOPER
STRUCTURAL ENGINEER

LBL - PEP 4 - TPC	JOB NO.	SHEET NO. 24 of 21
	DESIGNED BY	DATE 9/2/78
	APPROVED	

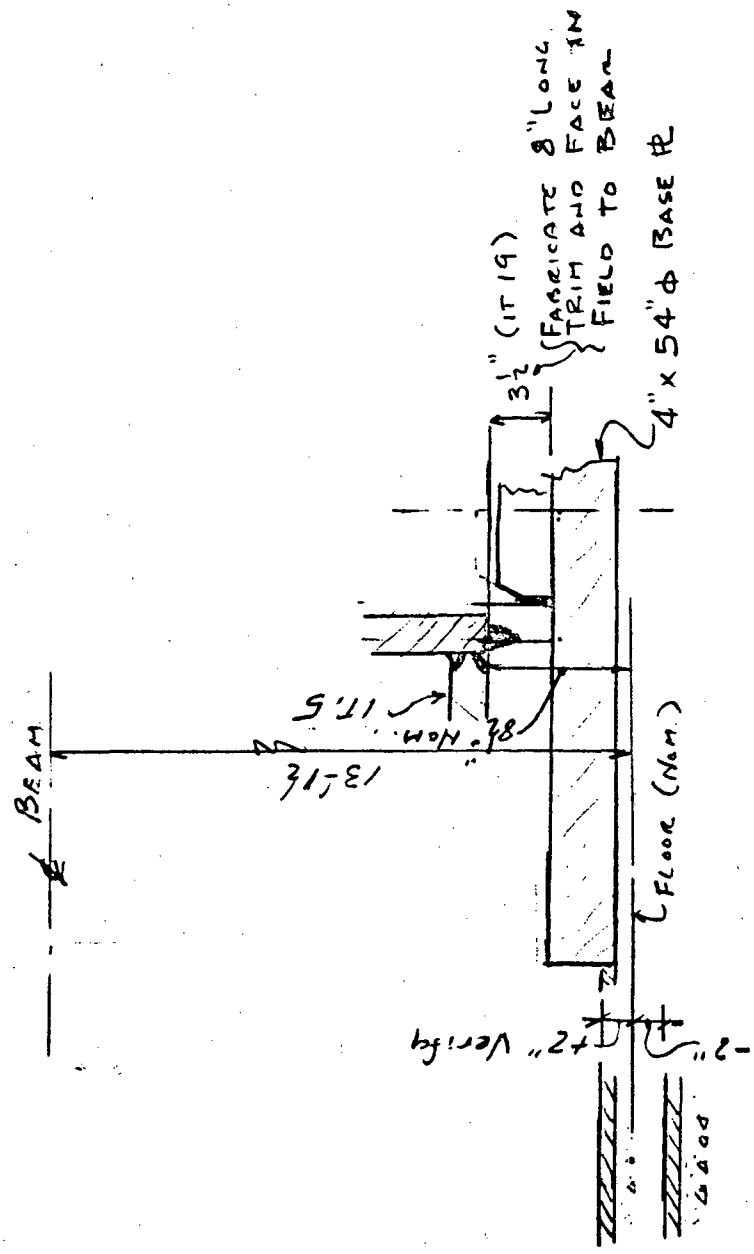

SOL E. COOPER
STRUCTURAL ENGINEER

JOB PEP 4 LBL. SHT. 1 OF 8
SUBJECT MAGNET LEG WELDS
BY SEC CK. DATE 9/23/79

REVIEW OF PROPOSAL TO LIMIT WELDING OF FIELD JOINTS IN MAGNET LEG.

EACH JOINT WAS DESIGNED AS PARTIAL PENETRATION CONTINUOUS.

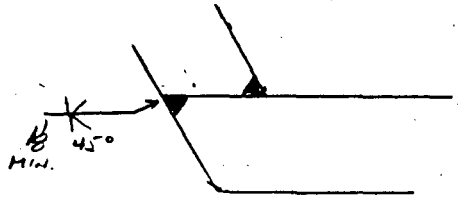

FOR FIELD CONDITIONS, P. PURGALIS CONSIDERS IT DESIRABLE TO LIMIT WELDING TO 2' EACH END AND AT MIDDLE.
TOTAL LENGTH = 14'

CHECKED

SHEAR REQUIREMENT FOR WELDS - STATIC LOADS

SHEAR AND MOMENT REQUIREMENT FOR WELDS AT GRAVITY + .7G LATERAL, CONSIDERING ENDS AS RIGID FRAME

WELDS SUFFICIENT ON BOTH COUNTS.

SOL E. COOPER
STRUCTURAL ENGINEER

JOB PEPA ∠BL SHT. 2 of 8
SUBJECT MAGNET LEGS - WELDS
BY SEC CK. DATE 9/22/79

CHECK WELDING OF MAGNET LEGS

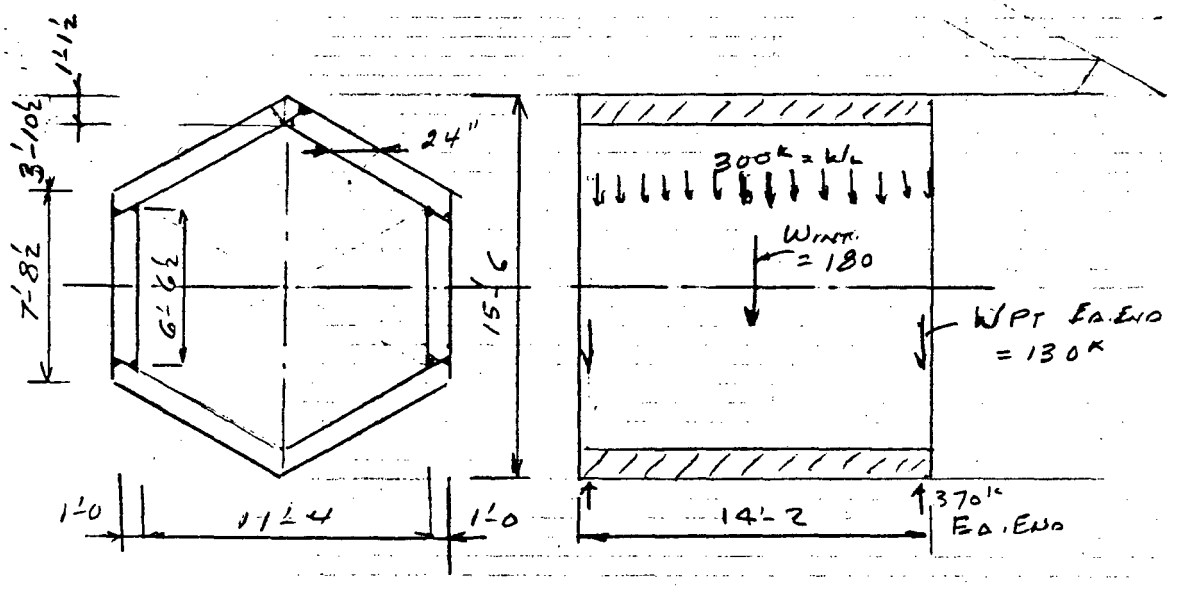

WT. OF LEGS

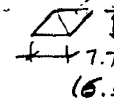

3@ [7.71 (6.67) − 6.54 (5.67)] (14.17)
= 610 c.f.
6.10 × .492 = 300K ✓
(284K PER PURGALU - OK)

STATIC LOADS, SYMM.

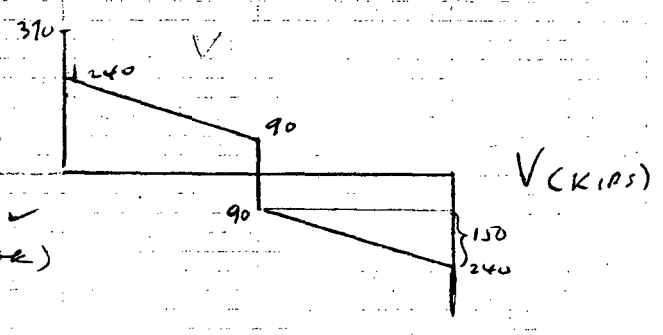

GIVEN LOADS

POLE TIP EA END = 130K = WPT
INT. EQ. (DISTRIB.?) = 180K = WINT.

WTOTAL = 300 + 260 + 180 = 740K

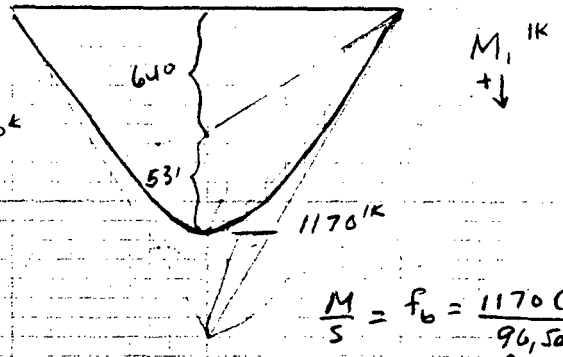

$$\frac{M}{S} = f_b = \frac{1170(12)}{96,500} = 0.15\text{ ksi.}$$

(Next sht.)

SOL E. COOPER
STRUCTURAL ENGINEER

JOB PEP4-LBL SHT. 3 OF 8
SUBJECT MAGNET LEGS-WELD
BY SEC CK. DATE 9/22/79

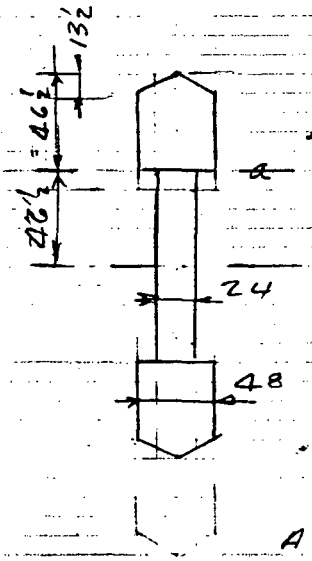

$I = \frac{186^3(24)}{12} = 12.87 \times 10^6$

$-\frac{93^3(24)}{12} = -\langle 1.61 \rangle$

$-\frac{2(24)(13.5)(84)^2}{2} = -\langle 2.29 \rangle$

$8.97 \times 10^6 \text{ IN}^4$

$S = \frac{897}{93} \times 10^4 = 9.65 \times 10^4 \text{ IN}^3$

$f_b = 1170(12)/96{,}500 = 0.15 \text{ ksi}$ (Very low)

AT @ $Q = 48(33)(46.5 + 16.5) = 99792$

$+ \frac{48}{2}(13.5)(93 - 9) = 27216$

$127{,}000$

$\frac{Q}{I} = \frac{.127}{8.97} = .0142$

For $V_{MAX} = 240^K$

$\frac{VQ}{I} = 3.4^K/\text{IN} \Rightarrow 1.7^K/\text{IN}$ AT EA CORNER

CHECK TORSIONAL SHEAR FLOW IF LOAD LANDS ON TWO DIAG. OPP. CORNERS

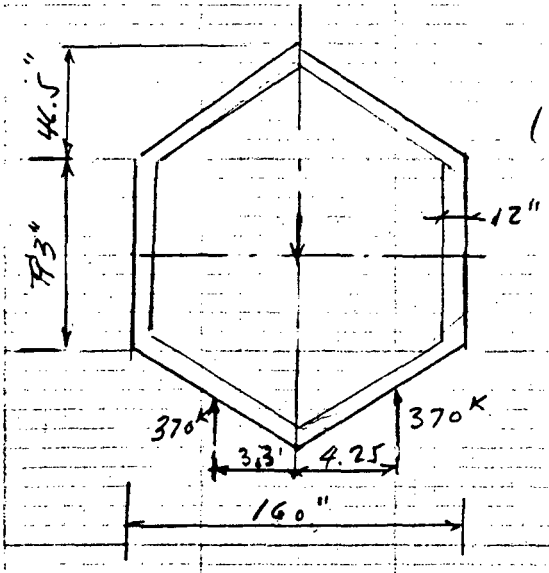

$T = 370^K (7.55)(12) = 33{,}522 \text{ "K}$

(Sh.fl.) $q = \frac{T}{2A}$ where A is included AREA at mid thickness

$A \approx (93 + 40)148 = 19{,}684$

$q \approx \frac{33{,}522}{19{,}684(2)} = 0.86^K/\text{IN}$

$\frac{VQ}{I} + q = 1.7 + .86 = 2.56^K/\text{IN}$

ALLOW FOR 2 WELDS/JOINT
1" /WELD SAY $21(\frac{4}{3}) = 28^K/\text{IN}$.
PROPOSE TO INTERRUPT WELDS
2' 4' 2' 4' 2'
14'

ok - but check Seismic effect

SOL E. COOPER
STRUCTURAL ENGINEER

JOB Pep 4-LBL SHT. 4 of 8
SUBJECT: Magnet Legs - Welds
BY SEC CK. DATE 9/23/79

SEISMIC EFFECT @ .7G

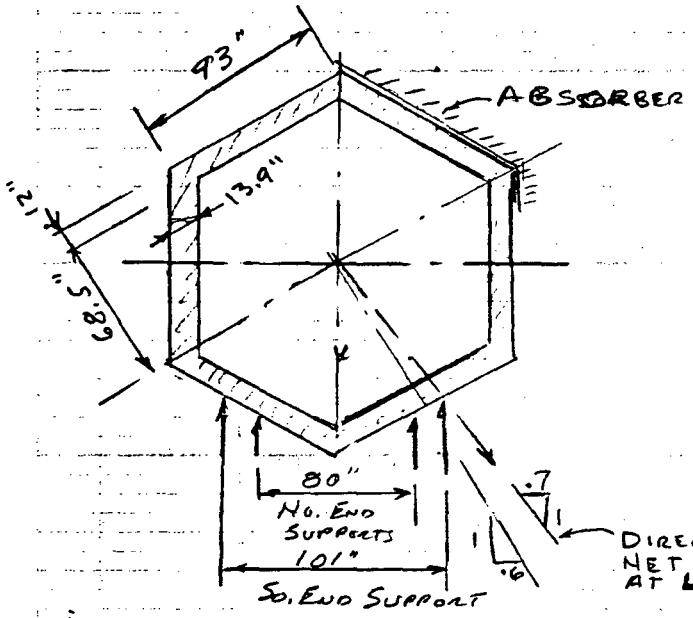

AT APPROX. 6G LAT., MAGNET LEG ROTATES, CLOSES GAP TO ABSORBER AND IS STOPPED BY ABSORBER

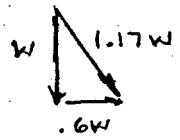

RESULTANT 1.17W IS SUPPORTED BY SINGLE SUPPORT, EACH END

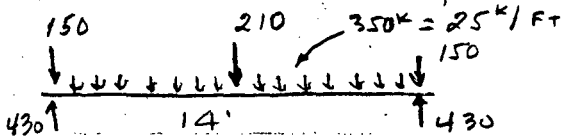

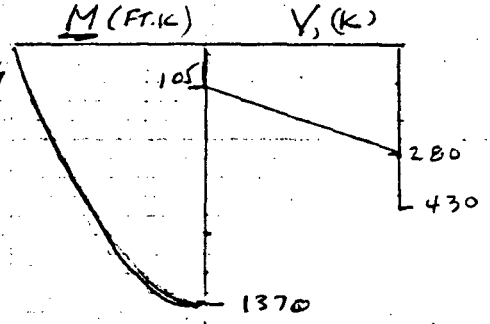

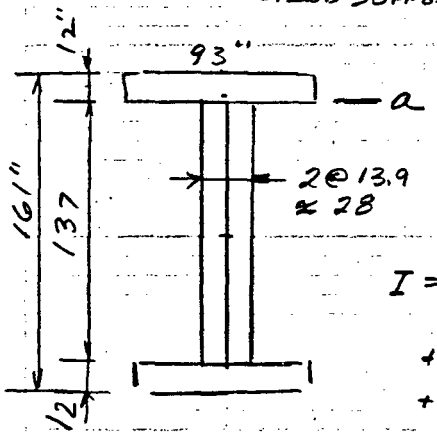

$$I = \frac{161^3(28)}{12} = 9.74 \times 10^6$$

$$+65(12)(2)(74.5)^2 = 8.66 \times 10^6$$

$$+65\frac{(12)^3}{12} = .01 \times 10^6$$

$$18.41 \times 10^6$$

$$S = 228.7 \times 10^3$$

$$f_b = \frac{1370(12)}{228{,}900} = 0.07 \text{ ksi !!}$$

$$Qa = 93(12)\,74.5 = 83142$$

$$\frac{VQ}{I} = \frac{280\,(83{,}142) \times 10^6}{18.4 \times 10^6} = 1.27^K/\text{in} \Rightarrow 0.6^K/\text{in EA. SIDE}$$

VERY LOW

SOL E. COOPER
STRUCTURAL ENGINEER

JOB PEP 4 LBL SHT. 5 OF 8
SUBJECT MAGNET LEGS - WEBS
BY SEC CK. DATE 9/23/79

CONSIDER END AS A FRAME

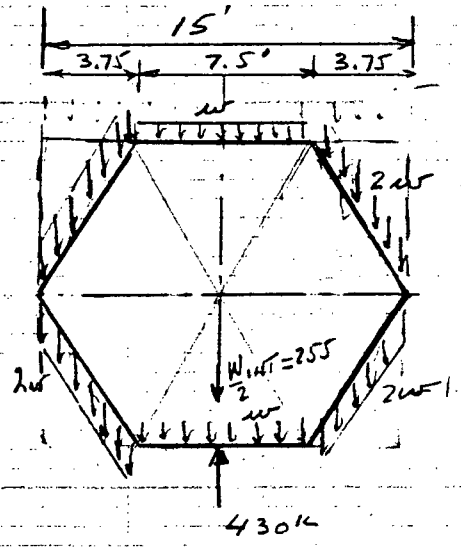

ASSUME POLE TIP RIGID
MAGNET CORE RIGID

WT. OF MAGNET LEG DISTRIBUTED

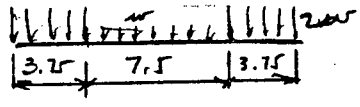

$3w(7.5)(2) = 175^K$

$w = 3.9^K/LF.$

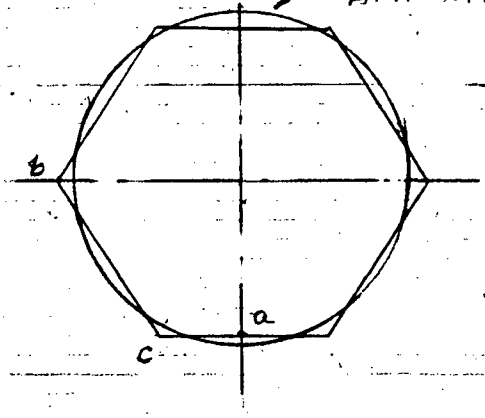

APPROX. EQUIV. CIRCLE
$= 7'R.$

SEE SOLUTION PER ROARK

at(a) $M_{MAX} = 300^{'K}$

$V = -88^K$

$T = -42^K \left(\frac{TA}{13}\right) = 45)$

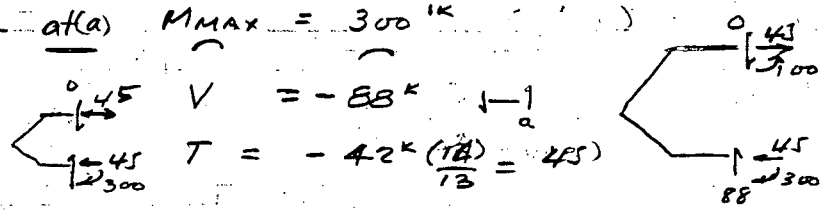

at (b) $M = 112^{'K}$

$V = +14$

$T = -42^K$

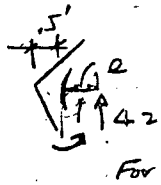

$42e = 112$

$e = 2.67'$

For Hex

$M = 112 \frac{(3.17)}{2.67}$

$= 133^{'K}$

at(c) $M \approx +78^{'K} \Rightarrow \frac{1.4}{1.9}(78) = 58^{'K}$ For Hex

$V = -66^K$

$T = -1.5(28) = -42$

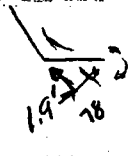

SOL E. COOPER
STRUCTURAL ENGINEER

JOB PEP4 LBL SHT. 6 OF 8
SUBJECT MAGNET LEG WELDS
BY SEC CK. DATE 9/23/79

CHECK BY ROARK FOR APPROX. EQUIV. CIRCLE
(3RD EDITION – CASE 18)

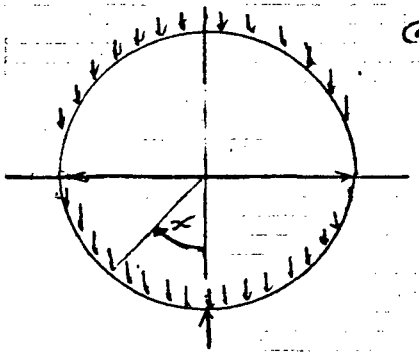

SELF WEIGHT OF MAGNET LEG = 150^K EA. END
@ SEISMIC = 150(1.17) = 175^K
IF R = 14', $w = \frac{175}{14\pi} = 4^K/LF = w$

$M = wR^2(1 + \frac{1}{2}u - \pi z + xz)$
$x = L$
$u = \cos x$
$z = \sin x$

$wR^2 = 49(4)$
≈ 200

x	u	z	πz	xz	M/wR^2
0	1	0	0	0	1.5
$\pi/8$	.924	.383	1.20	.150	0.412
$\pi/4$	.707	.707	2.22	.555	−0.312
$\frac{3}{8}\pi$	.383	.924	2.90	1.089	−0.618
$\frac{\pi}{2}$	0	1	3.14	1.570	−0.570
$\frac{5}{8}\pi$	−.383	.924	2.90	1.81	−0.282
$\frac{3}{4}\pi$	−.707	.707	2.22	1.67	+0.098
$\frac{7}{8}\pi$	−.924	.383	1.20	1.05	+0.388
π	−1	0	0	0	+0.500

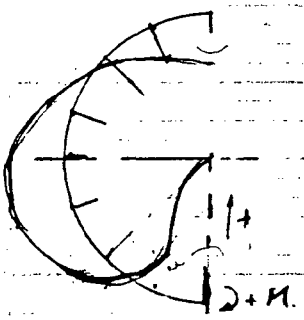

MORDINATES RADIAL
+ ⇒ CTR
2/IN.

$+M_{MAX} = wR^2(1.5) = 4(49)(1.5) = 300^{IK}$ ←
$-M_{MAX} = -wR^2(.642) = 126^{IK}$ ←

$V = wR(xu + \frac{1}{2}z - \pi u)$

x	u	z	xu	$z/2$	πu	V/wR
0	1	0	0	0	π	$-\pi$
.125π	.924	.383	0.36	.192	2.90	−2.35
.25π	.707	.707	.56	.353	2.22	−1.31
.375π	.383	.924	.45	.462	1.20	−0.29
.5π	0	1	0	.500	0	+0.50
.625π	−.383	.924	−.75	.462	−1.20	+0.91
.75π	−.707	.707	−1.67	.353	−2.22	+0.90
.875π	−.924	.383	−2.54	.192	−2.90	+0.55
π	−1	0	−π	0	−π	0

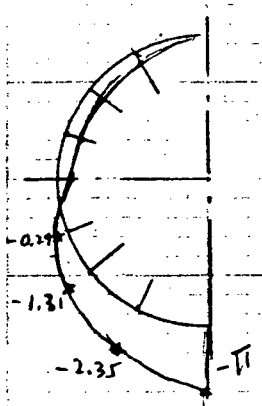

$V_{MAX} = -4(.7)\pi = -88^K$
$+ \quad (.50) = +14.2^K$

SOL E. COOPER
STRUCTURAL ENGINEER

JOB PEP4 LBL SHT. 7 of 8
SUBJECT MAGNET LEG WELDS
BY SEC CK. DATE 9/23/79

CHECK BY ROARK – EQUIV CIRCLE (CONT.)

Tension, $T = wR\left(xz - \frac{1}{2}u - \pi z\right)$

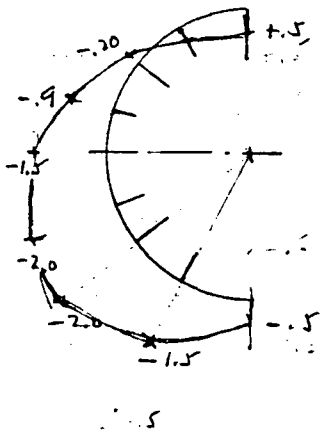

x	u	z	xz	$u/2$	πz	T/wR
0	1	0	0	.5	0	-.5
.125π	.924	.383	.150	.462	1.20	-1.51
.25π	.707	.707	.555	.353	2.22	-2.02
.375π	.383	.924	1.09	.192	2.90	-2.00
.5π	0	1	1.57	0	3.14	-1.57
.625π	-.383	.924	1.81	-.192	2.90	-0.90
.75π	-.707	.707	1.67	-.353	2.22	-0.20
.875π	-.924	.383	1.05	-.462	1.20	+0.31
π	-1	0	0	-.5	0	+0.50

$T_{MAX} = -2kwR = 2(4)(7) = -56^k$

$T_{\phi} = \pm 0.5\,wR = \pm 29$ (+ Top) (− Bott)

$T_{90°} = -1.5\,wR = -42$

SOL E. COOPER
STRUCTURAL ENGINEER

JOINT b

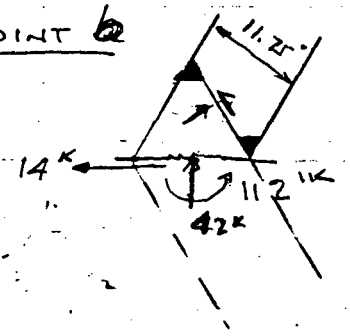

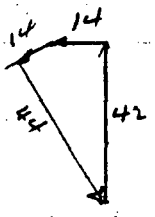

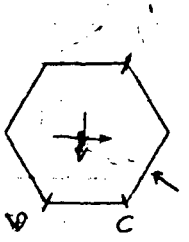

AT WELD $T \approx \frac{12}{10}(112) = 135^K$

$V = 44^K$

$135 + 44 \approx 142^K - \frac{14}{2}$

IF ALLOW $T = .6(36)(1.3)$
$= 28^K/IN$

AND ← EFFECTIVE THROAT = 1"

THEN REQUIRES $\frac{142}{28} = 5.1"$ OF WELD

PROVIDE 12" MIN.

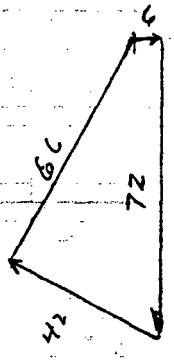

BY COMPARISON TO JOINT b OK TO USE SAME AS "b".

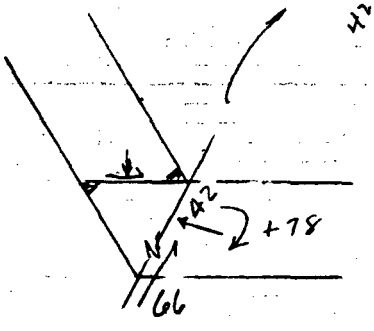

CONCLUDE

BY SEISMIC CRITERIA, 2' OF WELD OK EA END AT JOINTS EA. END.

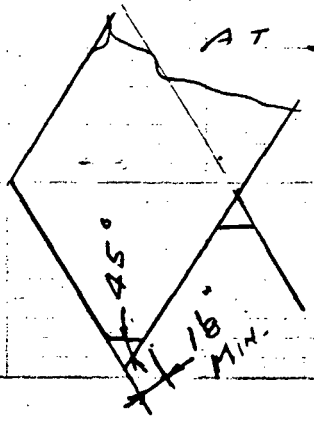

This report was done with support from the Department of Energy. Any conclusions or opinions expressed in this report represent solely those of the author(s) and not necessarily those of The Regents of the University of California, the Lawrence Berkeley Laboratory or the Department of Energy.

Reference to a company or product name does not imply approval or recommendation of the product by the University of California or the U.S. Department of Energy to the exclusion of others that may be suitable.

TECHNICAL INFORMATION DEPARTMENT
LAWRENCE BERKELEY LABORATORY
UNIVERSITY OF CALIFORNIA
BERKELEY, CALIFORNIA 94720