UC-38
LBID-368 c.1

Lawrence Berkeley Laboratory

UNIVERSITY OF CALIFORNIA

Engineering & Technical Services Division

RECEIVED
LAWRENCE
BERKELEY LABORATORY

MAR 2 0 1981

LIBRARY AND
DOCUMENTS SECTION

For Reference

Not to be taken from this room

UB LD-368 c.1

DISCLAIMER

This document was prepared as an account of work sponsored by the United States Government. While this document is believed to contain correct information, neither the United States Government nor any agency thereof, nor the Regents of the University of California, nor any of their employees, makes any warranty, express or implied, or assumes any legal responsibility for the accuracy, completeness, or usefulness of any information, apparatus, product, or process disclosed, or represents that its use would not infringe privately owned rights. Reference herein to any specific commercial product, process, or service by its trade name, trademark, manufacturer, or otherwise, does not necessarily constitute or imply its endorsement, recommendation, or favoring by the United States Government or any agency thereof, or the Regents of the University of California. The views and opinions of authors expressed herein do not necessarily state or reflect those of the United States Government or any agency thereof or the Regents of the University of California.

LAWRENCE BERKELEY LABORATORY – UNIVERSITY OF CALIFORNIA

ENGINEERING NOTE

CODE	SERIAL	PAGE
P40201	M5691	1 OF 16

AUTHOR	DEPARTMENT	LOCATION	DATE
P. PURCALIS	MECH. ENGR.	BERKELEY	2-26-81

PROGRAM – PROJECT – JOB
PEP-4

MUON SHIELDING

P. Purcalis
2-26-81

TITLE
DOOR HARDWARE STRUCTURAL CALCULATIONS

THE "DOORS" ARE RESTRAINED AT THE BOTTOM BY THE FLOOR CHANNELS & SEISMIC STOPS AND AT THE TOP BY THE DOOR HANGERS WHICH ATTACH TO THE FIXED FRAME OR SUPERSTRUCTURE

CALCULATIONS SHOW THAT, FOR A .7g EARTHQUAKE, THE STRESSES IN THE ATTACHMENT HARDWARE ARE WITHIN THE ALLOWABLE VALUES SPECIFIED BY AISC.

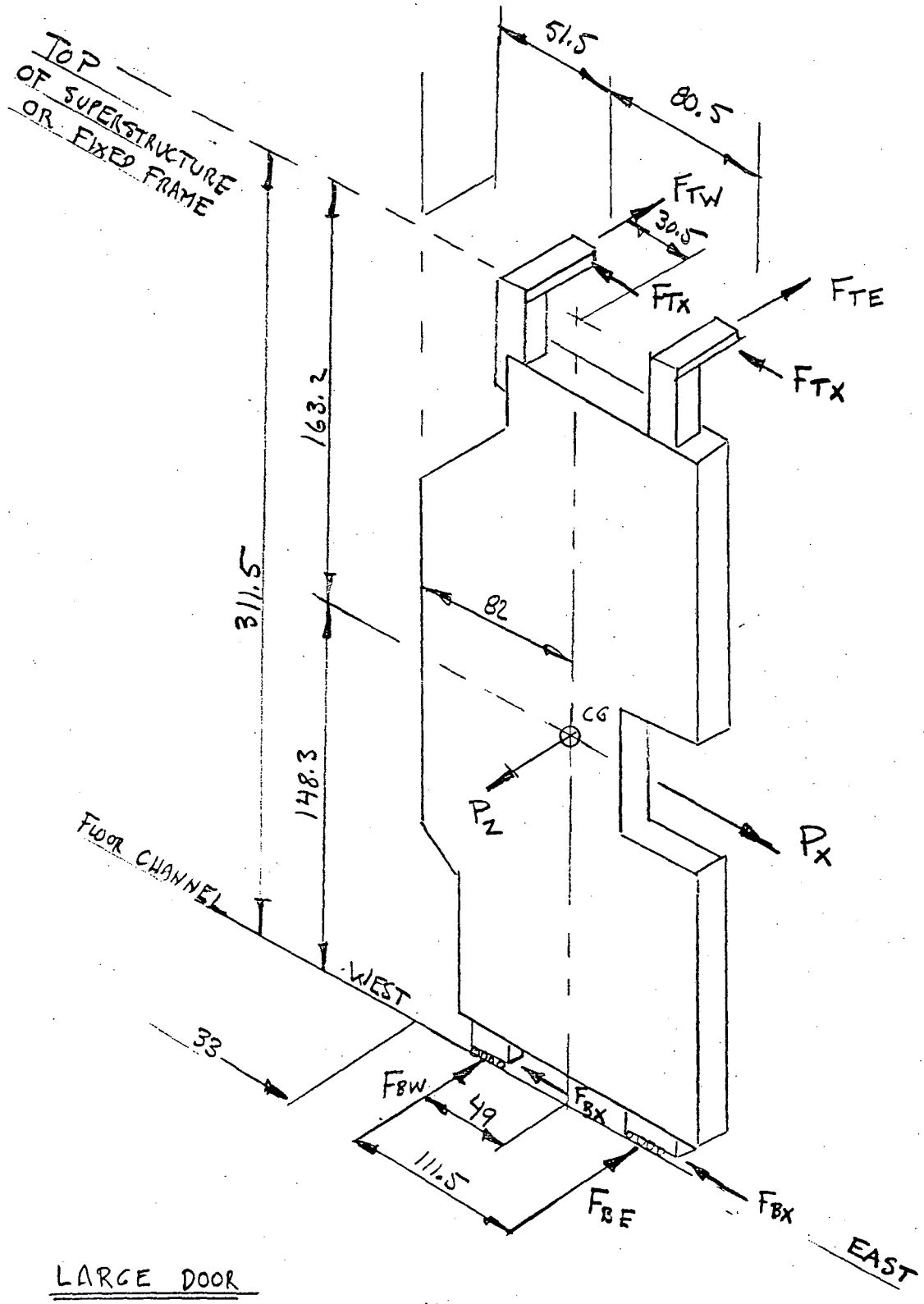

LARGE DOOR

DOOR WEIGHT = 78.5^K

MUON CHAMBERS = 11.1^K @ 10 LB/FT^2

HARDWARE 2.0^K

91.6 ≈ $\boxed{92^K = W}$

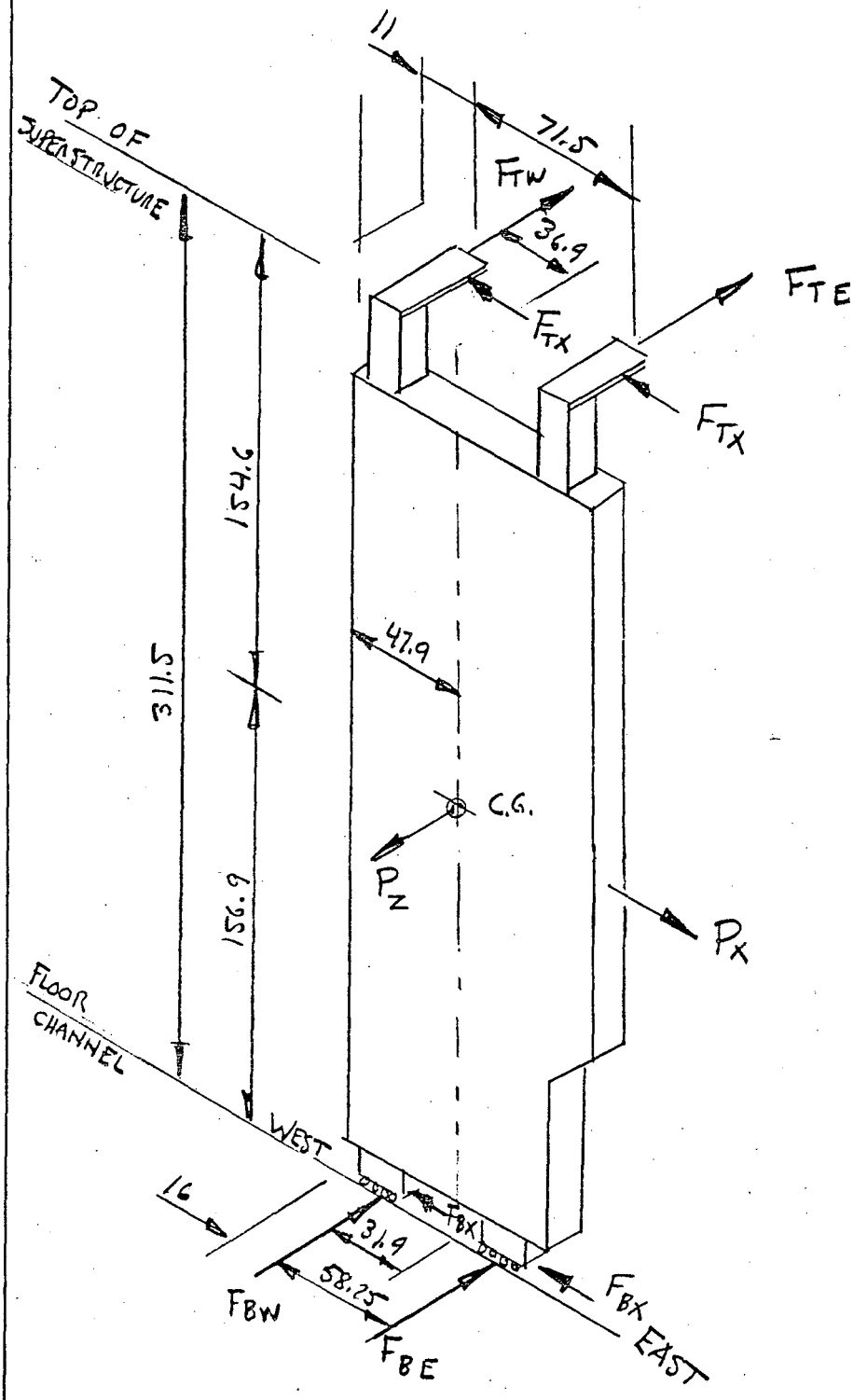

SMALL DOOR

DOOR WEIGHT = 54.5^K

MUON CHAMBERS = 7.0^K @ 10 LB/FT^2

HARDWARE = 2.0^K

63.5 ≈ $\boxed{64^K = W}$

LOAD ACTING ON LARGE DOOR C.G ALONG BEAM LINE IS DUE TO EARTHQUAKE AND PEP-9 MAGNET

P_z = EARTHQUAKE

$= .7(92^K) \qquad = 64.4^K$

FORCES AT TOP F_T AND BOTTOM F_B OF DOOR

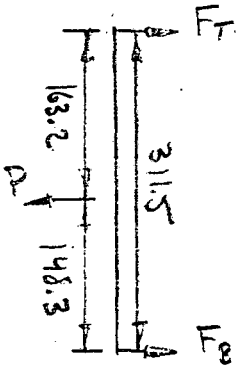

EARTHQUAKE

$F_T = \frac{148.3}{311.5} P = .48P \qquad .48(64.4) = \boxed{31^K}$

$F_B = \qquad .52P \qquad \boxed{33.5^K}$

FORCE ACTING ON WEST ROLLER F_{BW} & EAST ROLLER F_{BE}

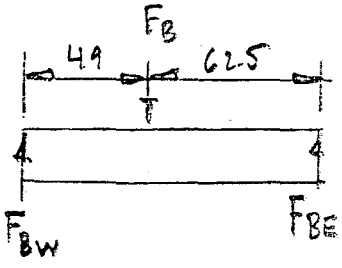

EARTHQUAKE

$F_{BW} = \frac{62.5}{111.5} F_B$

$= .56 F_B \qquad .56(33.5^K) = \boxed{18.8^K}$

$F_{BE} = .44 F_B \qquad .44(33.5) = \boxed{14.7^K}$

FORCE ACTING ON WEST HANGER F_{TW} & EAST HANGER F_{TE}

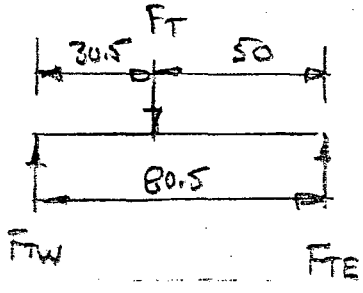

EARTHQUAKE

$F_{TW} = \frac{50}{80.5} F_T$

$= .62 F_T \qquad .62(31) = \boxed{19.2^K}$

$F_{TE} = .38 F_T \qquad .38(31) = \boxed{11.8^K}$

LOAD ACTING ON SMALL DOOR C.G. ALONG BEAM LINE IS DUE TO EARTHQUAKE AND PEP-9 MAGNET.

P_z = EARTHQUAKE

$= .7(64^k) = 45^k$

FORCES AT TOP F_T AND BOTTOM F_B OF DOOR

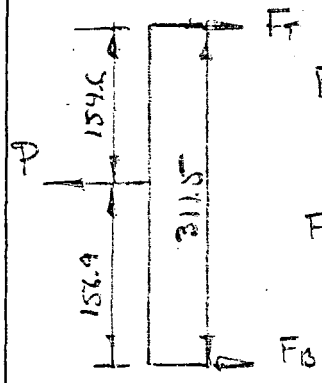

$F_T = \frac{156.9(P)}{311.5} = .50P$

$F_B = .50P$

EARTHQUAKE

$.5(45) = \boxed{22.5^k}$

$\boxed{22.5^k}$

FORCE ACTING ON WEST ROLLER F_{BW}
& EAST ROLLER F_{BE}

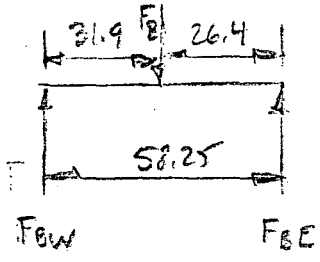

$F_{BW} = \frac{26.4 F_B}{58.25}$

$F_{BW} = .45 F_B$

$F_{BE} = .55 F_B$

EARTHQUAKE

$.45(22.5) = \boxed{10.1^k}$

$.55(22.5) = \boxed{12.4^k}$

FORCE ACTING ON WEST HANGER F_{TW}
& EAST HANGER F_{TE}

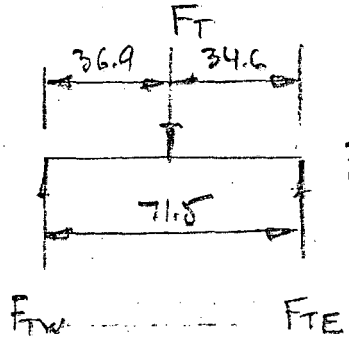

$F_{TW} = \frac{34.6 F_T}{71.5}$

$F_{TW} = .48 F_T$

$F_{TE} = .52 F_T$

EARTHQUAKE

$.48(22.5) = \boxed{10.8^k}$

$.52(22.5) = \boxed{11.7^k}$

FORCES IN X DIRECTION (PERPENDICULAR TO BEAM)

LARGE DOOR

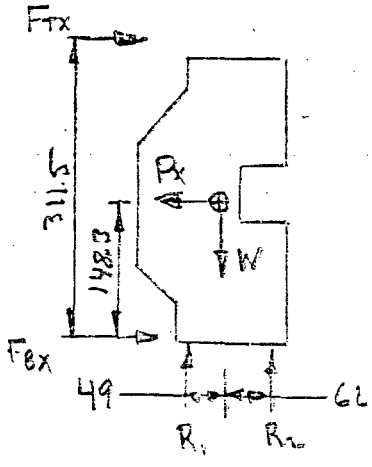

P_x = EARTHQUAKE = $.7(92^k) = 64.4^k$

FIND FORCE AT TOP F_{TX} FOR $R_2 = 0$ (TO KEEP DOOR FROM LIFTING R_2)

$\circlearrowleft + \Sigma M$ AROUND R_1

$$-P_x(148.3) + 49(W) + F_{TX}(311.5) = 0$$

$$F_{TX} = \frac{64.4^k(148.3) - 49(92^k)}{311.5} = \boxed{16.2^k}$$

ΣF_x $\quad F_{TX} + F_{BX} = P_x$

$$F_{BX} = P_x - F_{TX} = 64.4 - 16.2 = 48.2^k$$

OR $\frac{48.2}{2} = \boxed{24.1^k / \text{ROLLER}}$

$R_1 = W = \boxed{92^k}$ ← O.K → $\boxed{\text{ROLLER HAS } 50^T \text{ CAPACITY}}$

SMALL DOOR

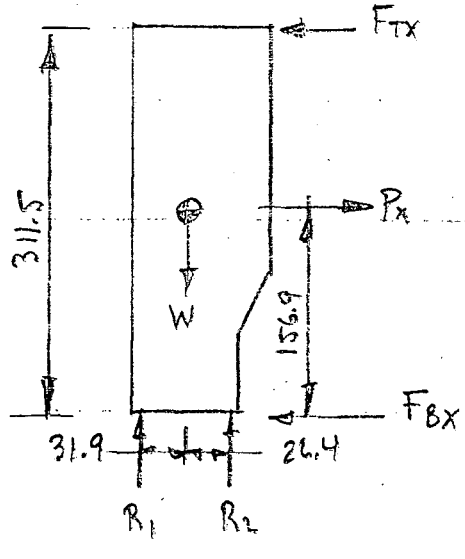

P_x = EARTHQUAKE = $.7(64^k) = 45^k$

FIND F_{TX} SO $R_1 = 0$

$\circlearrowleft + \Sigma M$ AROUND R_2

$$P_x(156.9) - 26.4(W) - F_{TX}(311.5) = 0$$

$$F_{TX} = \frac{45^k(156.9) - 64^k(26.4)}{311.5}$$

$$= 17.2^k$$

ΣF_x

$$F_{BX} = P_x - F_{TX} = 45 - 17.2 = 27.8^k$$

OR $\frac{27.8}{2} = \boxed{13.9^k / \text{ROLLER}}$

$R_2 = W = \boxed{64^k}$

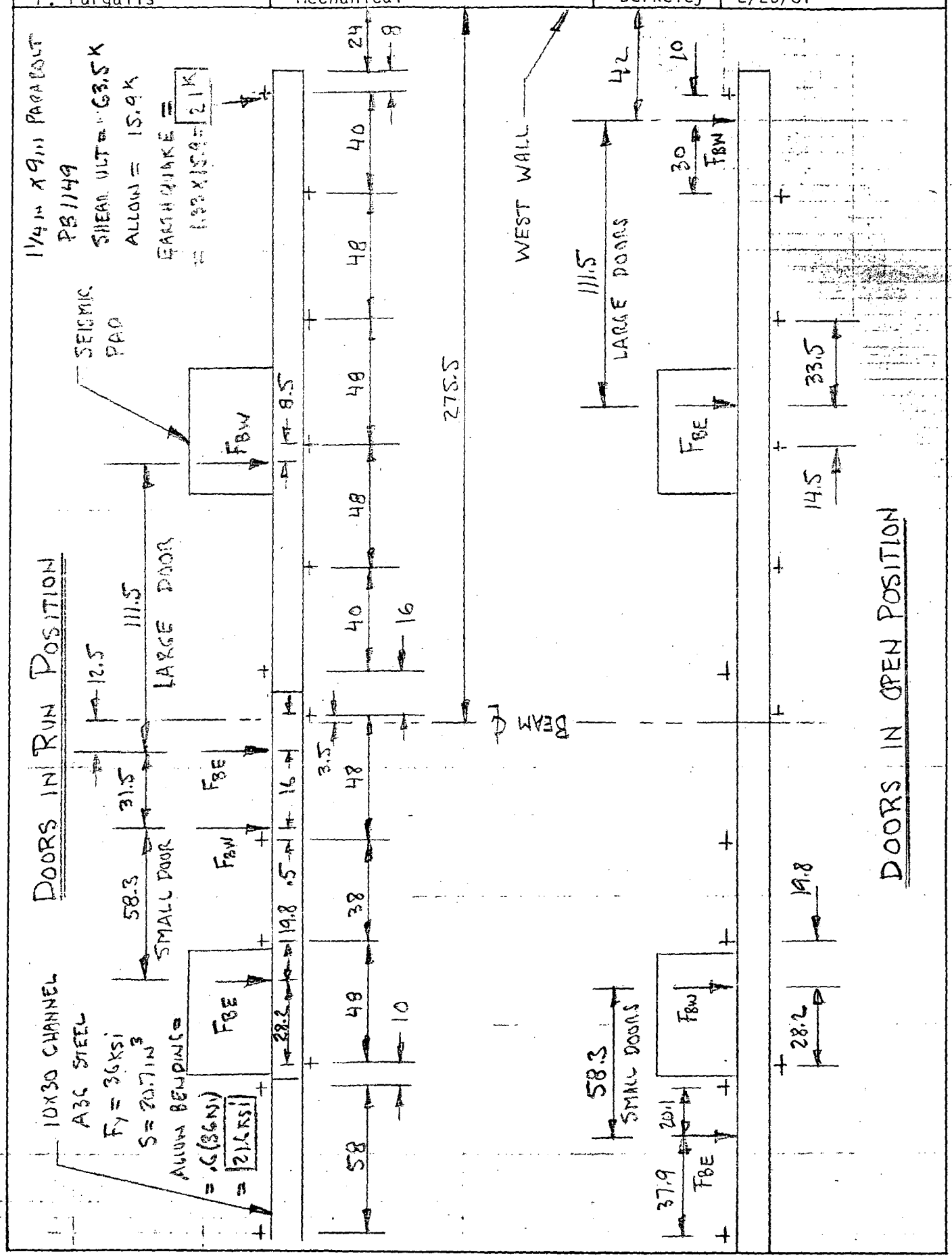
1 1/4 in x 9 in PARAPET
PB 1/49
SHEAR ULT = 63.5K
ALLOW = 15.9K
EARTHQUAKE = 21K
= 1.33 x 15.9 =
SEISMIC PAD
DOORS IN RUN POSITION
LARGE DOOR
111.5
SMALL DOOR
58.3
31.5
12.5
10X30 CHANNEL
A36 STEEL
Fy = 36KSI
S = 20.7 in³
ALLOW BENDING =
.6(36KSI) = 21.6KSI
FBW
FBE
WEST WALL
BEAM ℄
275.5
24
8
40
48
48
48
40
16
8.5
3.5
48
38
48
58
10
16
.5
19.8
28.2
DOORS IN OPEN POSITION
LARGE DOORS
111.5
42
10
30
33.5
14.5
SMALL DOORS
58.3
20.1
37.9
19.8
28.2

SEE PREVIOUS PAGE & 19C5986 FOR CHANNEL LAYOUT

CHECK CHANNEL ATTACHMENT TO FLOOR

CHECK WORST CASE

DOORS CLOSED

SMALL DOOR WEST ROLLER AND LARGE DOOR EAST ROLLER

$F_{BW} = 10.1$ $F_{BE} = 14.7$

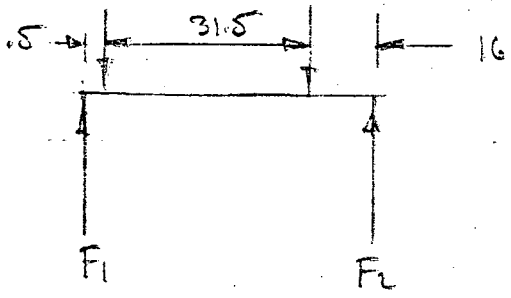

$$F_1 = \frac{F_{BE}(16) + F_{BW}(47.5)}{48}$$

$$= .33(14.7) + 1(10.1) = \boxed{15.0\ k}$$

$$F_2 = F_{BE} + F_{BW} - F_1$$

$$= 14.7 + 10.1 - 15 = \boxed{9.8\ k}$$

O.K

O.K

ALLOWABLE = $\boxed{21\ k}$
FROM PREVIOUS PAGE

CHECK CHANNEL BENDING

$$M = \frac{F_{BW}(a)(b) + F_{BE}(a)(b)}{L} = \frac{10.1(.5)(47.5) + 14.7(16)(32)}{48}$$

$$= 161\ k\text{-}in$$

$$\sigma = \frac{M}{S} = \frac{161\ k\text{-}in}{20.7} = \boxed{7.8\ ksi}$$

ALLOWABLE = $\boxed{21.6\ ksi}$
FROM PREVIOUS PAGE

O.K

CHECK ROLLER ATTACHMENT TO DOOR

MAX FORCE = EARTHQUAKE IN X DIRECTION FOR LARGE DOOR (PAGE 6)
= 24.1 K

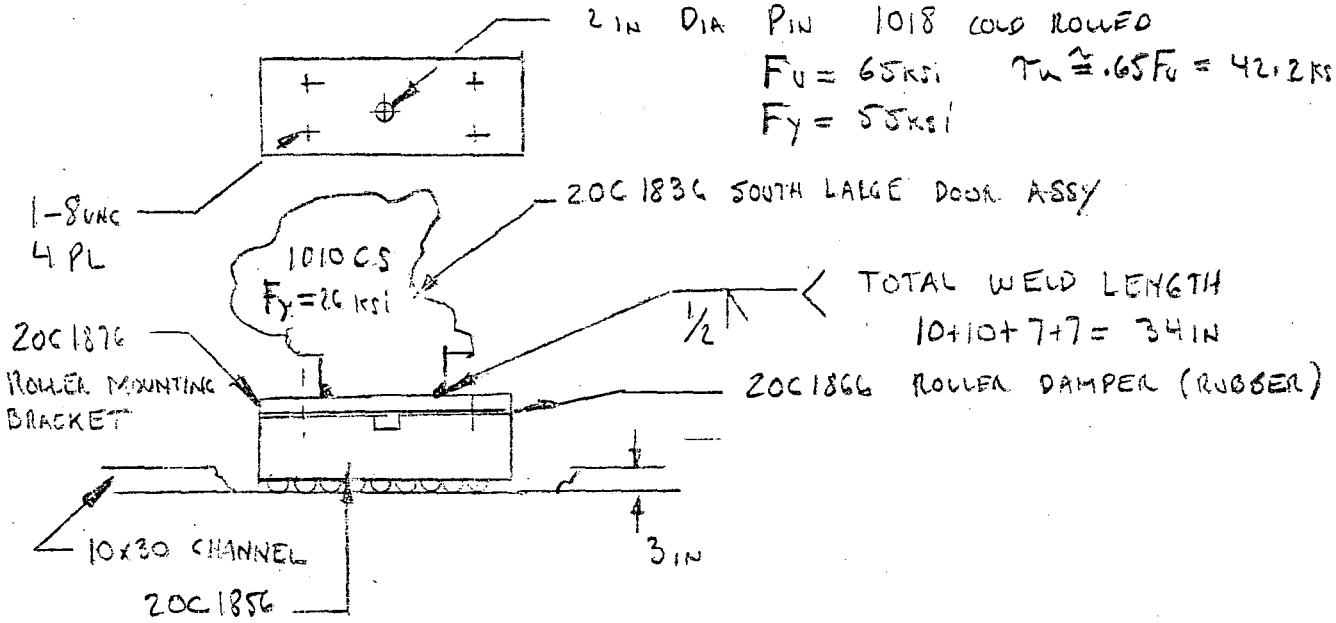

100T HILLMAN ROLLER

CHECK SHEAR ON 2 IN DIA PIN

A = 3.14 IN^2

$$\text{SHEAR} = \frac{24.1\,K}{3.14\,IN^2} = \boxed{7.6\,KSI}$$

FS = 5.6

τ_u = 42.2 KSI

2 IN PIN FITS INTO NEMA G-10 INSULATING BUSHING BEARING ON BUSHING

$$\text{BEARING} = \frac{24.1\,K}{2\,IN \times .75\,IN} = \boxed{16\,KSI}$$

FS = 3.8

COMPRESSIVE STRENGTH NEMA G-10 = $\boxed{60\,KSI}$

WELD SHEAR STRESS ROLLER MOUNTING BRACKET TO "DOOR"

$$\text{SHEAR} = \frac{24.1^{K}}{.5\text{IN} \times 34\text{IN}}$$

$$= \boxed{1.4\ \text{KSI}}$$

O.K

ALLOWABLE =

$= .4 \times F_y = .4(26\text{KSI}) = \boxed{10.4\ \text{KSI}}$

ROLLER TO CHANNEL SEISMIC STOP — PARALLEL TO CHANNEL
20C2114 DOOR LOWER SEISMIC ASSY

F = EARTHQUAKE = 24.1 K

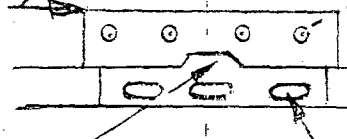

1-8UNC BOLTS 4 PER SIDE
A-307 ALLOW = 1.33 x 7.8 K = 10.3 K

10X30 CHANNEL

1.0X3 SLOT 1/4 FILLET ALL AROUND

WELD ALLOWABLE 2.5 K/IN x 6 SLOTS x 7 IN/SLOT = $\boxed{105^{K}}$

BOLT ALLOWABLE

8 BOLTS x 10.3 K/BOLT = $\boxed{83^{K}}$

SHEAR LIP AREA = 1 IN x 3 IN /SIDE
A36 F_y = 36 KSI

ALLOWABLE = .4 F_y x A = .4(36 KSI) x (2)(3 IN²)

$= \boxed{86.4\ K}$

MAX LOAD = $\boxed{24.1\ K}$ → O.K.

ROLLER AND CHANNEL SEISMIC STOP - PERPENDICULAR TO CHANNEL

WORST SIDE FORCE $F_{BW} = 18.8^K$
(LARGE DOOR)

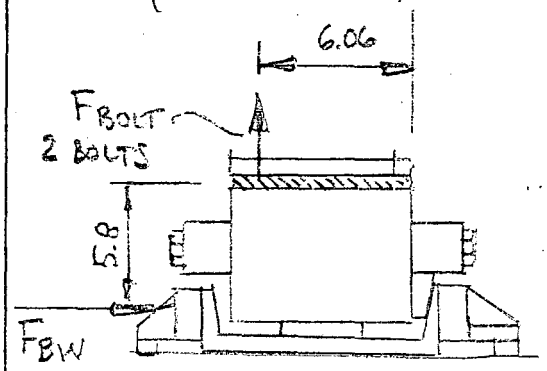

$$F_{BOLT} = \frac{5.8}{6.06}\left(\frac{F_{BW}}{2}\right) = \frac{.96}{2}(F_{BW})$$

EARTHQUAKE

$$F_{BOLT} = 18.8^K(.48)$$

$$= \boxed{9.0^K}$$

ALLOWABLE

A 307 BOLT $= 1.33\ (12.1^K) = \boxed{16^K}$

DOOR HANGERS

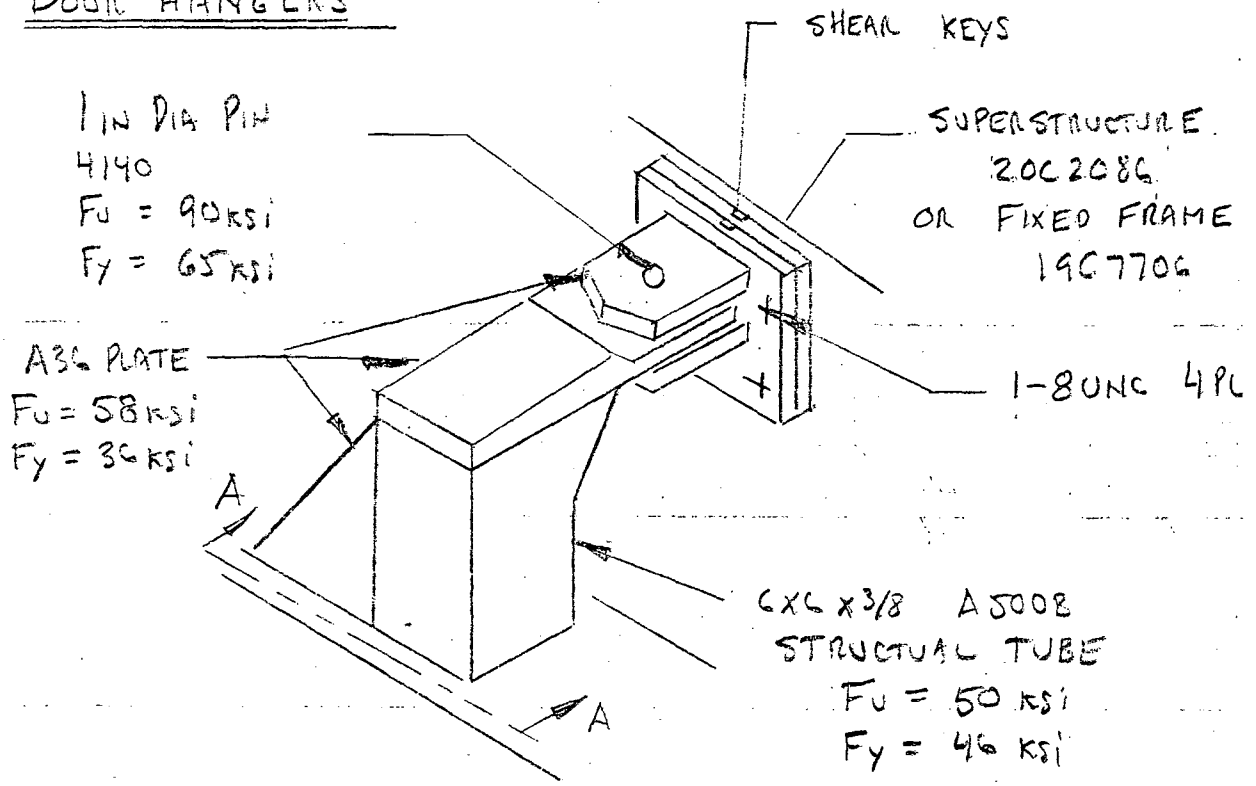

SEE DWG 20C2026 DOOR HANGER ASSY

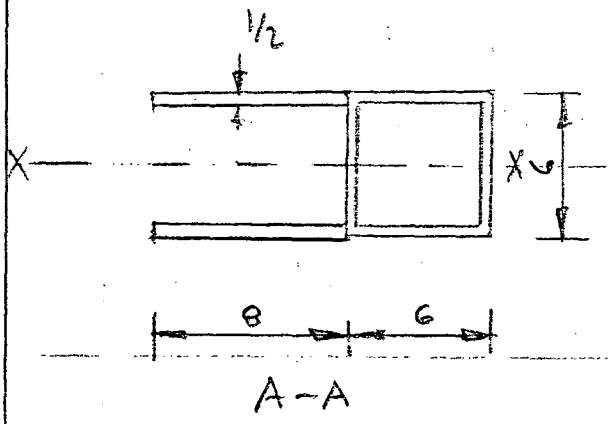

6X6X3/8 TUBE $I = 40.5$

PLATE $I = I_0 + Ad^2$

$= 2(.083) + 2(.5)(8)(3)^2$

$= 72$

$I_{TOT} = 40.5 + 72 = 112.5 \text{ IN}^4$

$S = \frac{I}{c} = \frac{112.5}{3} = 37.5 \text{ IN}^3$

CHECK BENDING & SHEAR AT A-A

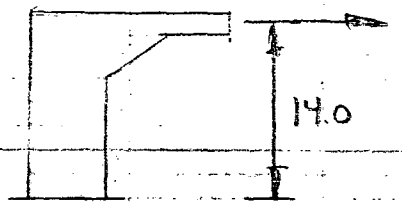

F = EARTHQUAKE

$= 19.2^K$

BENDING

$$\sigma = \frac{M}{S} =$$

$$= \frac{19.2^k (14\,IN)}{37.5\,IN^3}$$

$$= \boxed{7.2\,ksi}$$

O.K

ALLOWABLE =
$= .6\,F_y = .6(36) = \boxed{21.6\,ksi}$

CHECK WELD STRENGTH

WELD IS FULL PENETRATION ALL AROUND

FOR LARGE DOOR WEST HANGER

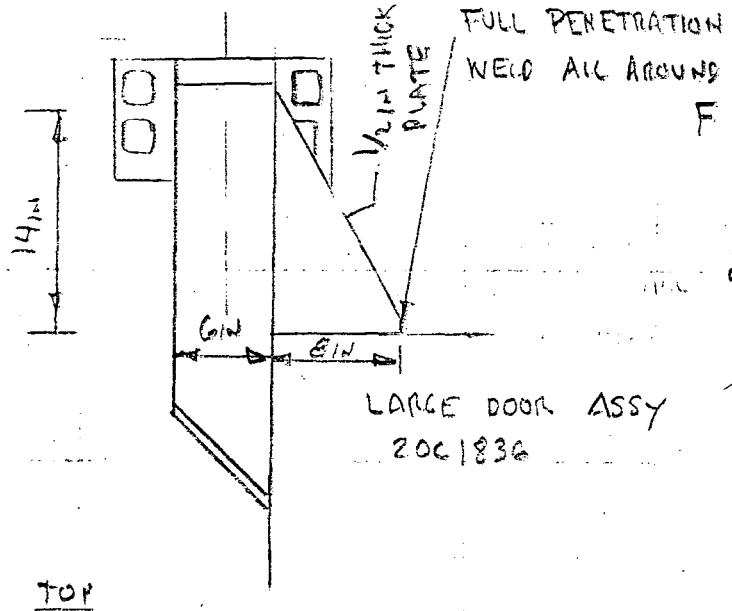

LARGE DOOR ASSY
2061836

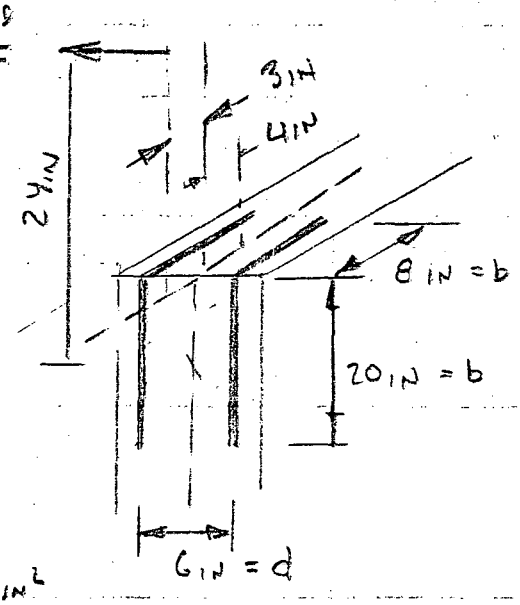

TOP

BENDING $S_w = \frac{b\,d^2}{2} = \frac{8(6)^2}{2} = 144\,IN^2$

TORSION $J_w = \frac{b}{6}(b^2 + 3d^2) = 229\,IN^3$

SEE BLODGETT "DESIGN OF WELDMENTS"

SIDE

$c = \frac{b+d^2}{2} = 5\,IN$

BENDING $S_w = 360\,IN^2$

TORSION $J_w = 1693\,IN^3$

$c = 10.4\,IN$

$F = F_{TW} = 19.2^K$

TOP

$M = 14_{IN} \times 19.2^K = 269\ K\text{-}IN$ $\qquad f = \frac{M}{S_W} = \frac{269}{144} = 1.87\ K/IN$

$T = 7_{IN} \times 19.2^K = 134\ K\text{-}IN$ $\qquad f = \frac{Tc}{J_W} = \frac{134(5)}{229} = 2.93\ K/IN$

SIDE

$M = 3_{IN} \times 19.2^K = 57.6\ K\text{-}IN$ $\qquad f = \frac{M}{S_W} = \frac{57.6}{360} = .16\ K/IN$

$T = 24_{IN} \times 19.2^K = 461\ K\text{-}IN$ $\qquad f = \frac{461(10.4)}{1693} = 2.83\ K/IN$

TOTAL WELD LENGTH $= 2(20) + 2(8) = 56\ IN$

SHEAR $= \frac{19.2^K}{56_{IN}} = .34\ K/IN$

TOP

$(2.93 + .34) = 3.27\ K/IN$

$1.87\ K/IN$

$f_r = \sqrt{3.27^2 + 1.87^2}$

$= 3.77\ K/IN$

O.K.

ALLOWABLE FOR 1/2 WELD $\boxed{5.0\ K/IN}$

SO TOP WELD ALONE IS O.K

AND ALL OTHER HANGERS ARE O.K SINCE THEY HAVE MORE WELD LENGTH.

CHECK ATTACHMENT TO FIXED FRAME & SUPERSTRUCTURE

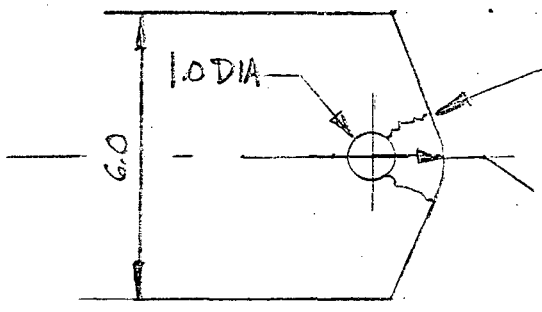

SHEAR AREA = .75 x 1 x 2
= 1.5 IN² FOR BOTH SIDES

BEARING AREA = .75 x 1
= .75 IN²

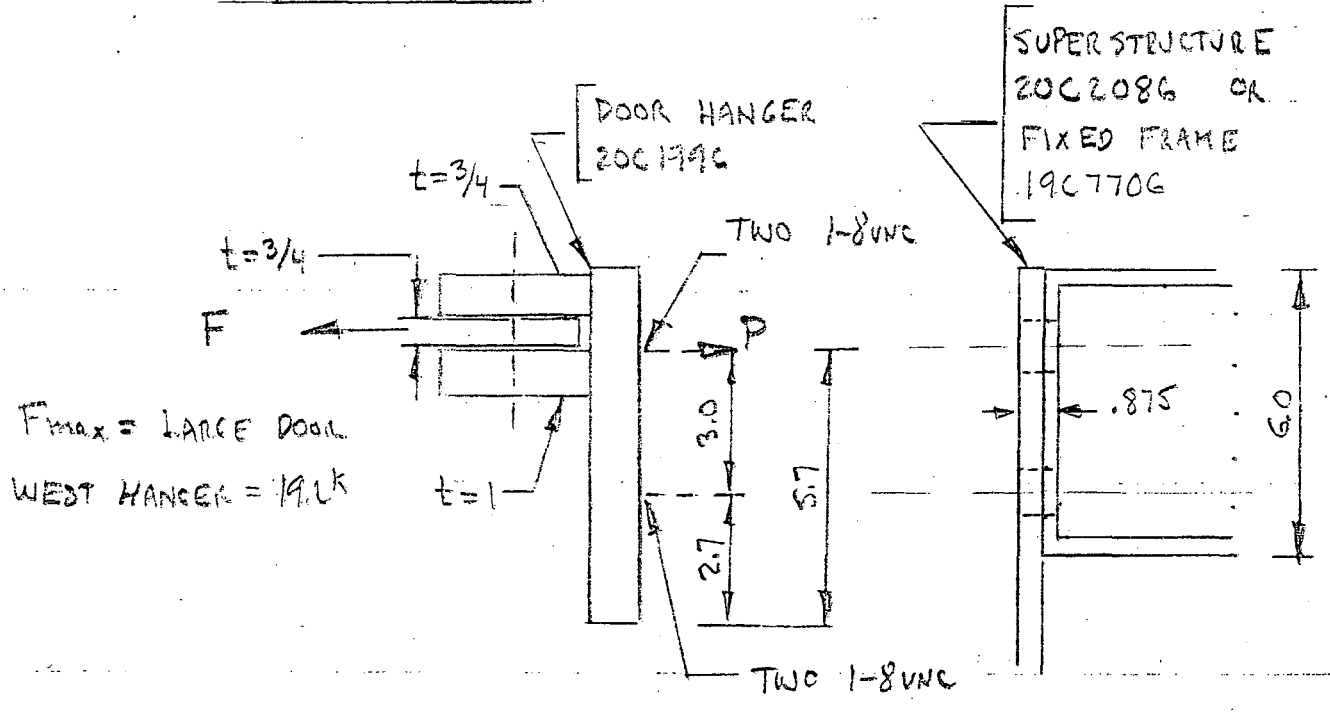

CHECK PIN - IN DOUBLE SHEAR $A = \frac{\pi}{4}(1)^2 = .785 \text{ IN}^2$

$$\tau = \frac{F}{A} =$$

$$= \frac{19.2^K}{2(.785)} = \boxed{12.3 \text{ ksi}}$$

F.S = 4.8

ULT SHEAR =

$$.65 F_u = .65 \times 90 = \boxed{58.5 \text{ ksi}}$$

CHECK TEAROUT

$$\tau = \frac{F}{A}$$

$$= \frac{19.2K}{1.5 IN^2} = \boxed{12.8 \text{ ksi}}$$

FS = 2.9

ULT SHEAR = .65 (Fu)

$.65(58 \text{ ksi}) = \boxed{37.7 \text{ ksi}}$

CHECK BEARING STRESS

$$\sigma_{BR} = \frac{F}{A}$$

$$= \frac{19.2^K}{.75 IN^2} = \boxed{25.6 \text{ ksi}}$$

O.K

ALLOWABLE =

$= .9 F_y = .9(36) = \boxed{32.4 \text{ ksi}}$

CHECK BOLT STRESS

$$P = F\frac{(6.2)}{5.7} = F(1.1)$$

$$= 19.2(1.1) = 21.1$$

$$\sigma = \frac{P}{A} = \frac{21.1K}{2(.606 IN^2)} = \boxed{17.4 \text{ ksi}}$$

FS = 1.9

PROOF STRESS

A307 BOLT = $\boxed{33 \text{ ksi}}$

THREAD ENGAGEMENT

FROM MACHINERY'S HANDBOOK 20TH ED PAGE 1168)

SHEAR AREA INTERNAL THREADS FOR 1-8UNC = 2.34 IN^2/IN

$A = 2.34 IN^2/IN \times .875 IN = 2.05 IN^2$

ULT STRENGTH = $.65(58 \text{ ksi}) \times 2.05 IN^2 = \boxed{77.3^K / \text{BOLT}}$

This report was done with support from the Department of Energy. Any conclusions or opinions expressed in this report represent solely those of the author(s) and not necessarily those of The Regents of the University of California, the Lawrence Berkeley Laboratory or the Department of Energy.

Reference to a company or product name does not imply approval or recommendation of the product by the University of California or the U.S. Department of Energy to the exclusion of others that may be suitable.

TECHNICAL INFORMATION DEPARTMENT
LAWRENCE BERKELEY LABORATORY
UNIVERSITY OF CALIFORNIA
BERKELEY, CALIFORNIA 94720