UC-20 & 32
LBID-375 c.1

Lawrence Berkeley Laboratory

UNIVERSITY OF CALIFORNIA

Engineering & Technical Services Division

RECEIVED
LAWRENCE
BERKELEY LABORATORY

JUL 2 1981

LIBRARY AND
DOCUMENTS SECTION

For Reference

Not to be taken from this room

LBID-375 c.1

DISCLAIMER

This document was prepared as an account of work sponsored by the United States Government. While this document is believed to contain correct information, neither the United States Government nor any agency thereof, nor the Regents of the University of California, nor any of their employees, makes any warranty, express or implied, or assumes any legal responsibility for the accuracy, completeness, or usefulness of any information, apparatus, product, or process disclosed, or represents that its use would not infringe privately owned rights. Reference herein to any specific commercial product, process, or service by its trade name, trademark, manufacturer, or otherwise, does not necessarily constitute or imply its endorsement, recommendation, or favoring by the United States Government or any agency thereof, or the Regents of the University of California. The views and opinions of authors expressed herein do not necessarily state or reflect those of the United States Government or any agency thereof or the Regents of the University of California.

Zephyr Control and Diagnostics

Victor Elischer
Van Jacobson

Real Time Systems Group
Lawrence Berkeley Laboratory
University of California

1. Requirements

The Zephyr Control and Diagnostic System must

(1) Allow Zephyr Central Control to easily set the start time, duration and voltage of each Neutral Beam pulse of every Neutral Beam source.

(2) Allow an operator to easily and safely bring each Neutral Beam source to the point where it is ready to deliver beam to Zephyr. (This includes both the long "conditioning" phase of a new Neutral Beam Source and the short "warm up" necessary for a "cold" but conditioned source).

(3) Monitor long and short term behavior of the Neutral Beamlines to alert the operator to potentially damaging trends before any damage occurs.

(4) Provide sufficient diagnostic information to allow operators, engineers and physicists to rapidly determine the cause of any problems with a Neutral Beam source or beamline.

In addition, the entire Neutral Beam system must be highly reliable (>75% availability), produced at a minimum cost and completely operational in a relatively short time (4 calendar years).

The next section details a Diagnostic and Control system which we feel meets all of the above criteria. It is an adaptation of the LBL developed system used to control the TFTR Neutral Beam Test Facility (NBSTF) and General Atomic's Doublet-III Neutral Beam Injectors (the existing LBL Neutral Beam system was itself an outgrowth of earlier LBL developed real-time accelerator control systems and, thus, represents approximately 50 man-years of accumulated development in

real-time control).[4,5,6,8,9,10,12]

Since the Zephyr Control and Diagnostics system is a small iteration from the existing LBL Neutral Beam system, equipment cost and delivery schedules can be specified with some confidence (the entire system is constructed from commercially available equipment[1]). The use of the proven LBL software minimizes the largest component of the system's cost (the software development cost). Since the NBSTF and Doublet-III control systems have demonstrated excellent availability (>95% overall, >99% for the computer system), have met or exceded all of their original design objectives and are well liked by their users, we have good reason to believe this is the best system solution for Zephyr.

2. Control System Architecture

This section discusses the hardware and software components of the Neutral Beam Control System. It starts with a description of the primary transducers and controls, proceeds to the data acquisition hardware, the computer system, operator/Zephyr interface then software architecture.

A simplified block diagram of the entire Neutral Beam Control System is shown in Fig.4-1. It consists of one medium scale mini-computer per beamline. All beamlines are identical (to minimize maintenance and development costs) and there is no communication among beamlines (to minimize the impact of a beamline's failure). A few simple interface signals (discussed in Sect.2.5) connect Zephyr Central to each beamline.

Each beamline computer is connected to the beamline instrumentation and controls via CAMAC crates and modules. CAMAC was chosen (as opposed to a vendor supplied process I/O system) since it is an international standard for nuclear instrumentation and thus probably familiar to engineers and physicists working on both Zephyr and the Zephyr Neutral Beams. Also, there are commercially available CAMAC modules to perform almost every function necessary for Neutral Beam operation - we have found no vendor able to supply an equivalent range.

In addition to the computers for the injection beamlines, there is a control computer for the Test Cell beamline (to be used for source conditioning and detailed

diagnostic investigations of the Neutral Beams) and a computer for software and hardware development (this last is frequently omitted - since the life-cycle costs of the control system will be dominated by the programming and operating costs and lack of an available machine for development and test generally makes the programming take at least twice as long, this "economy" generally saves a few hundred thousand dollars initially and ends up costing many times that). Since all the computers are identical, either the Test Cell machine or the Development machine can be used to run an Injection Beamline in the event of a failure. (The failure rates of mini-computers are very low - the NBSTF Modcomp Classic has had only one in its 2 year operating life - but the MTTR is often long - the Classic problem took almost 3 weeks to isolate; the NBSTF development computer was used in its place while the problem was being worked on).

Figure 4-2 is a fairly detailed block diagram of a single beamline computer. Briefly, a typical shot sequence is: power supply setpoints are taken from the data base and output to the power supply subsystem via CAMAC D/A converters. The CAMAC based timing system is triggered (from the local "Fire" button or the Zephyr master timing system) and it in turn sequences the power supplies and various other hardware and software modules (the circled T's are the timing system outputs which trigger some sequence of events). Some software modules acquire experimental data and place it in the data base. The arrival of new data then triggers higher level software modules which display the data, fit it to models of the physical process involved, search for alarms or anomalies or update models of the long term source behavior. These new models, together with possible operator input, are then used to predict the correct power supply setpoints for the next shot.

2.1. Instrumentation.

A variety of instrumentation is necessary to keep a beamline operational and to spot and fix various failures.

- Thermocouples are required on virtually everything in line-of-sight to the beam. A sufficiently dense rectangular array is required on the beamline calorimeter to allow a model to be fit to the temperature distribution. The results of this fit will be used in "tuning" the source for maximum power density and minimum

divergence angle. It is also used to center the beam so there is minimum power lost on the various apertures.

The Ion Dump requires a "cross" pattern of thermocouples with enough resolution in the vertical direction to adjust the magnet current so that all three energy components of the beam lie on the dump.

Each aperture requires top, bottom, left and right thermocouples for use in correcting beam position during normal operation (Zephyr injection).

- Water Flow Calorimetry is required on each aperture, Ion Dump and Calorimeter cooling water circuit. This diagnostic provides an energy inventory which directly measures the energy supplied to Zephyr. It is also the main indicator for degradation in the Neutral Beam Injector (e.g., a change in source perveance will cause an increase in divergence angle which will show up as too much energy deposited on one of the apertures).

- Cryo System Indicators (consisting of Carbon-Glass Resistors (CGRs), Ion gauges, thermocouple gauges and LN and LHe level indicators) are needed on the cryo panels, dewars and transfer lines. The large cryo system has a number of failure modes but catastrophic events can usually be prevented by adequate information (e.g., high ion gauge pressure in one of the chambers could indicate a leak or a failure to pump. A high LHe panel temperature would then indicate a phase inversion in one panel which was causing it not pump. Adjusting the flow could correct this problem before the high gas load caused all the panels to fail).

- Electrical Signals (various power supply and source voltages and currents) are used as inputs to the source Fault Detector, are the primary measure of all source characteristics (perveance, arc efficiency, filament resistance, etc.) and the usual diagnostic for investigating both single-shot failures and long term degradations. The usual sensors are resistive dividers, current shunts, hall probes and current transformers. The eventual data must be in the form of time histories (i.e., waveforms) with at least 1KHz bandwidth (with 1MHz required on a few signals).

Experience at NBSTF has demonstrated that the MTTR for an electrical problem (which comprise the bulk of the beamline problems) varies inversely with the number of monitors available (NBSTF monitors about 60 power supply and source waveforms and it would be useful to look at several more).

Since certain signals are the primary indicator of source performance (i.e., Iaccl, Vaccl, Igg, etc.) and large dividers and shunts have substantial gain and offset drift over relatively short times (< 1 day), at minimum these signal should have a computer controllable calibration system which calibrates as much of the signal path (transducer, cabling, signal conditioner, telemetry, digitizer, etc.) as possible.

- Fault Detector (sparks, overcurrent, etc.) is necessary to prevent various electrical faults from damaging the source or power supplies. Most faults are simply preset thresholds (e.g., Gradient Grid current > 250ma) and the fault detector must cause power to be temporarily removed from the source. However, post-shot analysis of faults requires that the type and time (to within about 1 micro-second) of each fault be available to the computer. For example, a Gradient Grid to Suppressor Grid spark is usually indicated by a fast dV/dt in Vaccl. However, a Source Grid to Gradient Grid spark also has this fast dV/dt but is accompanied by a high Gradient Grid and Suppressor current. All three fault indications and their time of occurrence are needed to resolve between the two events.

- Safety Interlocks are required to protect people and equipment from mistakes and improper operation (e.g., firing with people in the high voltage area, attempting a shot with the filament power supply off, etc.). Since the interlocks are the primary safety system, they should be simple and self contained. However, since a substantial portion of the machine turn-on time can be involved in making up the interlocks, complete information on interlock status should be available to the computer so missing interlocks can be flagged for rapid location and fixed.

2.2. Interface Hardware

With the exception of the Water Flow Calorimetry, Waveform Calibration system and Fault Detector, all of the above instrumentation, up to and including the interface to the computer is mass produced commercial equipment:

- The thermocouples are type E (chosen for its temperature range and high output). They are buffered with individual amplifiers and brought into the computer thru multiplexed, dual-slope integrating adc's. Both the amplifiers and Adc's are available as CAMAC modules from a number of vendors (NBSTF and Doublet-III use Kinetic Systems KS-3540 amplifiers and KS-3510 Adc's). (Note: the Neutral Beam environment contains both substantial electrical noise and high radiation fluxes. To avoid electronic equipment radiation damage and to simplify maintenance, all electronic equipment should be located outside the shielding walls. Since this results in long signal runs, all signal conditioners need to be true differential with high common mode noise rejection.)

- CGR's, Ion Gauges and Liquid Level Indicators are are standard commercial products. The CGR's and level indicators interface signal condtioning pre-amplifiers and 12-bit CAMAC Adc's; the Ion Gauges thru 16-bit CAMAC digital input modules using the digital interface supplied by the Ion Gauge manufacturer.

- The power supply and source electrical monitor signals are conditioned (attenuated or amplified) to be in the +- 5 V range acceptable to industrial process I/O hardware. The amplification is via commercially available instrumentation amplifiers, the attenuation via compensated resistor networks. Signals which originate at ground level are run directly into commercially available waveform digitizers (NBSTF and Doublet-III use either 32 channel, 12 bit, 1 KHz Lecroy 8212's or 8 channel, 8 bit, 1 MHz Lecroy 2264's, depending on the time resolution necessary). Signals which originate at Accel potential are conditioned, then brought down to ground level via commercial fiber optic telemetry (2 MHz bandwidth). The analog telemetry output is then fed into the appropriate waveform digitizer.

- The interlocks are done by a commercially available programmable sequencer (Doublet-II and Doublet-III use the Texas Instruments TI-6MT, TFTR the Process Control Systems PCS-2000).

- All sequencing and timing (both hardware and software) is controlled by a CAMAC based timing system. The timers have an external trigger input (which start them timing) and 2 24-bit registers. One register sets the time from the trigger to when the timer "ON" transition occurs and the other sets the time from the "ON" transition to the "OFF" transition. These registers are used as presets for 24-bit down counters counted out by a 1 MHz crystal clock and can generate timing signals ranging from 1 micro-second to 2 days delay and/or duration. NBSTF, Doublet-III and TFTR use a CAMAC timer module developed by TFTR/LBL but commercial equivalents are available.

- In addition to the major diagnostic signals listed above, a variety of miscellaneous signals are interfaced via general purpose CAMAC D/A's, Adc's, Digital input modules and Digital output modules. These include a shot counter (2 16-bit digital inputs), setpoint requests from Zephyr Central (a 12-bit Adc), status report to Zephyr Central (a 16-bit digital output), etc. These are all stock CAMAC modules available from virtually any CAMAC supplier.

Of the non-commercial hardware, the water flow calorimetry is done by an LBL developed, micro-processor based CAMAC module (currently being used by NBSTF and Doublet-III). Calibration is done by an LBL developed calibration signal generator NIM module (currently being used by NBSTF and LBL TS-III). An LBL developed prototype of the fault detector (lacking the computer readout of fault times) is in use at NBSTF and the version described here is in development (for use in NBETF).

2.3. Computer

Each beamline is controlled by a medium-sized minicomputer. The criteria for the computer are:

- It must be fast enough to perform all necessary processing for a shot at the maximum Neutral Beam rep

rate (a shot every 2 minutes).

- It must have enough disc storage for all of its programs, all of the large volume per shot data (e.g., 512k bytes of waveform data / shot) and all historic shot data required by the modelling, auto-conditioning and fault detection software.

- There must be sufficient main memory to perform several tasks in parallel (e.g., do a fit to the calorimeter thermocouple data while the acquiring waveform data).

In addition, since all of the available evidence demonstrates the life-cycle costs of the Control System will be dominated by the software costs (general industry results show the software / hardware cost ratio is about 10 to 1 and our experience confirms this), the computer system should be chosen to minimize the software cost. Some factors involved in this are:

- The computer should be fast enough that the bulk of the software can be done in a high-level language (this results in about a 5-fold productivity improvement).

- The computer should be large enough that it is only run at about 50% utilization of its bandwidth, main memory or disc (software costs tend to go up exponentially as any resource approaches saturation).

- The computer operating system should contain facilities for breaking down a problem into discrete units, sequencing those units and managing communication among them.

In the last 5 years, a substantial body of literature on engineering software/hardware systems has developed. The bibliography mentions a few important papers.[2,3,7] The points above are a distillation of this literature and our own experience with real-time control systems.

The NBSTF and Doublet-III systems use Modcomp Classic computers with 512K words of memory, 3330-style 80M byte discs (1 per system), 75 ips tape drives (1 per system) and a medium speed line printer (1 per facility - usually on the development machine).

2.4. Operator Interface

The operator interface to the Neutral Beam line is via a simple operator's console. The console consists of three video graphics CRT's (2 color and one black and white), a transparent, touch sensitive panel over the face of the monochrome CRT and 2 programmable knobs. The graphics CRT's have sufficient resolution (512 x 512) to show contour plots of the calorimeter temperature data, scope-like pictures of power supply waveforms, block diagrams of the beamline marked with interlock status, etc. The monochrome CRT and touch panel are used for all control functions. The touch panel has a resolution of 64 x 64 (about .5 by .5 cm squares). Controls, timing diagrams, mimic diagrams, etc., are painted on the CRT and the operator simply touches the appropriate part of the screen to perform some function (Fig.4-3 shows a touch panel display used to control beamline timing and a menu used to select displays of temperature data). Things which require smooth adjustment (power supply settings, on times, etc.) are assigned via touch panel button to one of the knobs. A small display over the knob gives the name of the thing it is adjusting and the current value (e.g., "Vaccl 75.8KV"). Turning the knob raises or lowers the value.

This type of operator interface has been shown to have a number of advantages.[6,11]

- It requires virtually no training time - one simply points at what one wants done.

- It is infinitely expandable - when a new device or function is added to the system, controls for it are simply a matter of painting the appropriate thing on the CRT screen.

- It reduces operational errors - the only controls which ever appear on the screen are ones which are reasonable to use at the current phase of operation. It's impossible for anyone to "accidentally hit the wrong button" and cause damage.

- It makes the machine simple to operate - the operator is usually dealing with an unambiguous picture of what is being operated (e.g., control of vacuum valves is done by painting a picture of the beamline vacuum tanks and valves. A valve is opened or closed by touching it.) There is little possibility of

confusing the names of things and operating on the wrong one by mistake.

Most of the diagnostic and control information is in the form of various displays which can be called up on either color CRT. A video hardcopy device is connected to the console which will make paper copies (monochrome) of whatever is on any of the CRT screens.

The CRT's, graphics controller and hardcopy device are commercial equipment (NBSTF uses Mitsubishi CRT's, Grinnel graphics controllers and a Versatek video hardcopy unit). The touch panel/knob panel is an LBL developed, microprocessor based unit used in a number of control systems (NBSTF, Doublet-III, BART).

2.5. Zephyr Controls

The substantial investment in high level Neutral Beam control software allows Zephyr to treat the entire Neutral Beamline as a simple "black box". Zephyr simply specifies the operating voltage and on times for each Neutral Beam via analog voltages (e.g., 0V for 0KV, 5V for 40KV, etc. In general, the Neutral Beam system uses analog signals for communication, even between basically digital devices (like 2 computers). This is because it is universal (any process control computer can generate and receive 0 - 10V signals), it is easy to troubleshoot (the signal can be tested by a scope or meter and generated by any signal generator) and because Large Scale Integrated Circuits have made system costs almost solely a function of the number of interconnections - 10 bits of information can go over 1 wire in analog form but requires 10 wires in digital form.) In addition, the Zephyr timing system must supply a pulse to the Neutral Beam timing system about 2 minutes before a shot to allow it to setup (items like power supply tap changes can take more than a minute to complete) and a pulse 3 seconds before a shot to initiate the Neutral Beam firing sequence (the Neutral Beam will fire some fixed time - accurate to microseconds - from this last pulse). The communication from the Neutral Beam computer to Zephyr is a single 16-bit word indicating its state (up/down, ready to fire, failure on last shot, etc.). This status word can be read at any time and need not be read at all.

When the Neutral Beam computer receives the "setup" timing pulse, it reads the desired operating voltage and beam pulse length, computes Accel, Arc, Gradient Grid, Suppressor and Filament power supply settings using the optimum operating point predicted by the source models for that voltage, commands the power supplies to those settings and sets up the control timing and data acquisition sequence appropriate for a shot into Zephyr. Local operation of the beamline is accomplished via touchpanel buttons which select among various operating modes (start-up, conditioning, beam to calorimeter, etc.) and cause the Zephyr pulse to be ignored.

(The Doublet-III 4 beamline, 8 source Neutral Beam system communicates with the Doublet-III Tokamak Control computer essentially as described above).

2.6. Software Architecture

The Neutral Beam system consists of a number of small "tasks". Each task performs a single specific function (e.g., read thermocouple post-shot temperatures, fit a bi-gaussian to a temperature distribution, display current shot on a graph of the source models, etc.). All data input to a task comes from an external database (a task has no memory - it keeps no internal data). Each task produces a single output which is put into the database (i.e., a set of temperatures, the fit parameters - no task is allowed to do something like read temperatures and display them: a display would be a 2nd output).

The system is constrained this way to reduce its complexity.[7] The basic operation of any program is to use some data to produce other data. Since programs have only a single output, there are no side effects (e.g., one doesn't worry about the operation of updating the source models resulting in the display currently on the right hand screen being wiped out). The output completely characterizes the program (e.g., for the tuning program to use the results of the fit, it's only necessary for its writer to understand <u>what</u> the fit output parameters are, not <u>how</u> they were generated. Since tasks have no memory, failures are easy to test and isolate (i.e., since there is no internal data, the output is solely a function of the inputs and an incorrect output is either due to an incorrect input or a mistake in the algorithm. The former is easy to test since the inputs are always available for inspection in the database. The

latter is easy to correct since the same input must always generate the same output).

In general, it is reasonable to run the same algorithm (task) on any subset of a type of data (e.g., displaying the temperatures on an aperture is the same algorithm, regardless of which aperture). Thus, a task is started by handing it the names of the database items it is to use as inputs and outputs. When a task has processed the list of data, it sends whoever started it a message saying it is done processing the set of data. (Since a task produces a single output, this completion message is equivalent to stating that the task's output data is now available).

A special task called the Dispatcher manages all of the task sequencing. It works from a description of the inputs and outputs of each task and the following rules:

- a task is started if it is "requested" (initial requests are generated by things like interrupts from the timing system and touch panel button pushes) and all of its inputs are available.

- a task is requested if its output is needed by any requested task.

The first rule causes a task not to be run until everything necessary for it to run is available. E.g., the operator may request the fit display at any time during a shot. It will not appear until the fit parameters for the current shot have been computed.

The second rule causes requests to percolate "backwards" and creates a system which automatically does only what is necessary - the only programs run are those which are necessary precursors to some display or program requested by the operator or necessary to the safe operation of the Neutral Beam (these programs are automatically requested). For example, requesting a display of the plasma probe profile results in a request for filtering and averaging of the plasma probe waveforms. The request for averaging will in turn generate a request for acquisition of the plasma probe waveforms. The profile display task knows nothing of either of these requests - it will simply run when the data has been acquired and averaged. If it is requested again before the next shot, it will run immediately (since all of its data is available) and there is no extraneous requests for the averaging or acquisition. If the display is not

requested, the probe data will be neither acquired nor averaged (unless something that is requested requires probe data).

The NBSTF/Doublet-III Neutral Beam system consists of about 60 small tasks which, via various sets of input data, produce about 200 displays and perform about 100 additional control or housekeeping functions. The average task size is about 200 lines (3 pages of code). The per-shot database consists of about 15K 16-bit words. (the database is for a single source - multiply it by 3 for the Zephyr beamlines - the number of tasks, of course, depends only on the number of types of data, not on the quantity of data, and is unchanged for Zephyr).

Bibliography

(1) Belshe, R.A., Elischer, V., Jacobson, V., The Feasibility and Advantages of Commercial Process I/O Systems for Accelerator Control, IEEE Particle Accelerator Conference, Washington, D.C., March 1975

(2) Boehm, B. W., Software and Its Impact: A Quantitative Assessment, Datamation, Vol.19, No.5, May 1973, p.52

(3) Brooks, F.P., The Mythical Man Month, Datamation, Vol.20, No.12, December 1974, p.45

(4) Elischer, V., Jacobson, V., Wiley, K., The Cost of Program Development for Small Computers in a Large Accelerator Control System, LBL-4238

(5) Elischer, V., Fehr, S., Jacobson, V., Wiley, K., Designing the TFTR Neutral Beam Line Control System Software to Aid the Engineer, LBL-4315

(6) Elischer, V., Fiddler, J., Graphical Human Interface to a Neutral Beam System, SIGGRAPH 1979 Sixth Annual Conference on Computer Graphics and Interactive Techniques, Chicago, IL, August, 1979

(7) Endres, A.B., An Analysis of Errors and Their Causes in System Programs, IEEE Transactions on Software Engineering, Vol.SE-1, No.2, June 1975

(8) Kohli, J., Moore, C.D., Drobnis, D.D., Elischer, V., Kilgore, R., Uber, D., Instrumentation and Control of the Doublet-III Neutral Beam Injector System, Eighth Symposium on Engineering Problems of Fusion Research, San Francisco, CA, November 1979

(9) LBL/LLL CTR Staff, TFTR Neutral Beam Injection System Conceptual Design, LBL-3296

(10) Lietzke, A.F., Berkner, K.H., Feist, J.H., Smith, R.R., Baker, W.R., Hopkins, D.B., Lutz, I.C., Bereznai, D., Jacobson, V., Initial Operation of NBSTF, the Prototype Neutral Beamline for TFTR, Twenty-second Annual Meeting of the APS Division of Plasma Physics, San Diego, CA, November 10, 1980

(11) Rouse, W.B., Human Problem Solving Performance in a Fault Diagnosis Task, IEEE Transactions on Systems, Man and Cybernetics, Vol.SMC-8, No.4, April 1978, p.258

(12) Theil, E., Elischer, V., Fiddler, J., Jacobs, N.J.D.J., Jacobson, V., Lawhorn, R., Uber, D., Wilner, D., Progress in Computer-Assisted Diagnosis and Control of Neutral Beam Lines, Eleventh Symposium on Fusion Technology, Oxford, England, September 1980

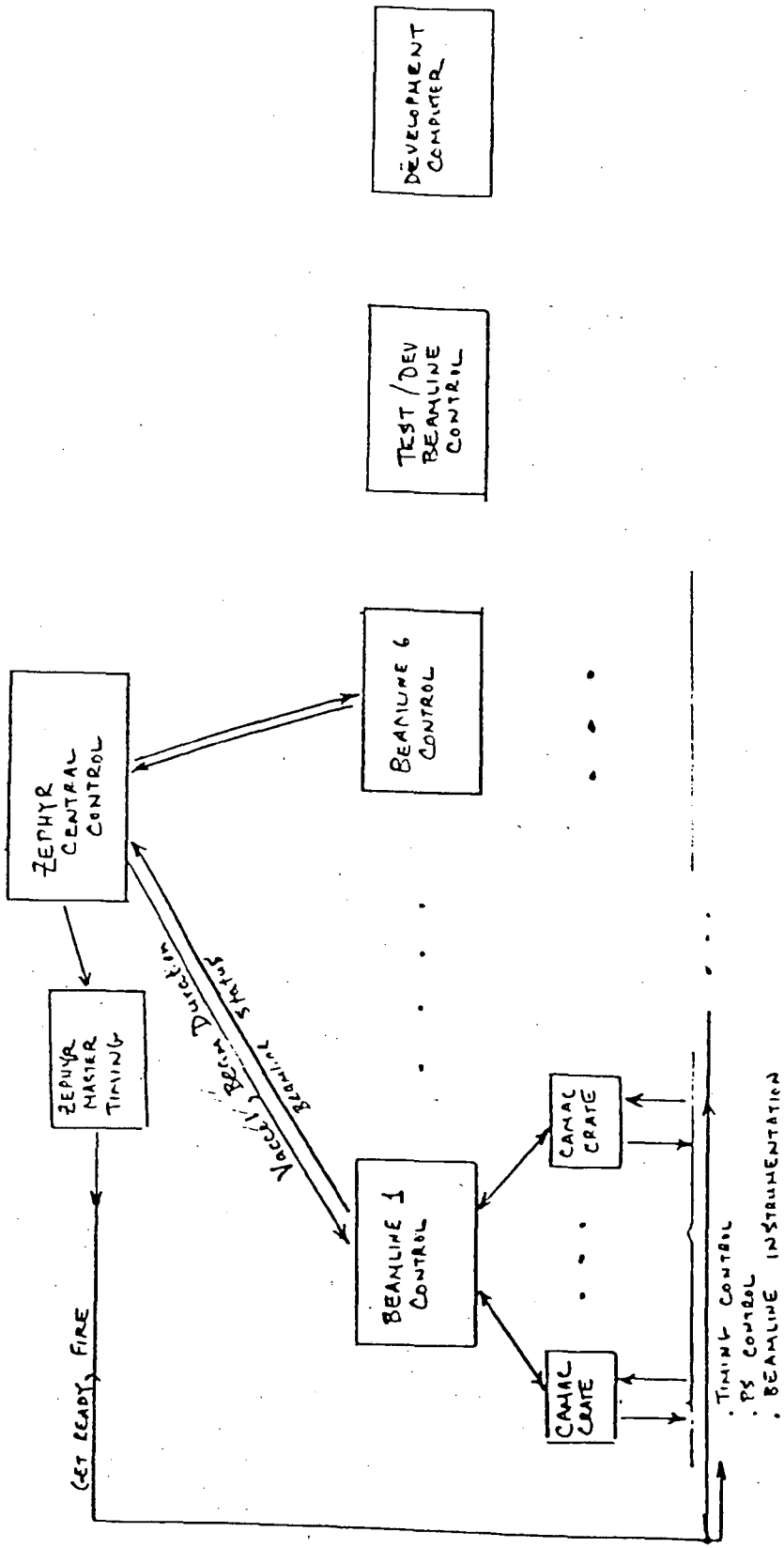

FIGURE 4-1 - NEUTRAL BEAM CONTROLS AND DIAGNOSTICS

SHOT 26044 ARC & FIL TIMING 03/03/81 00:42

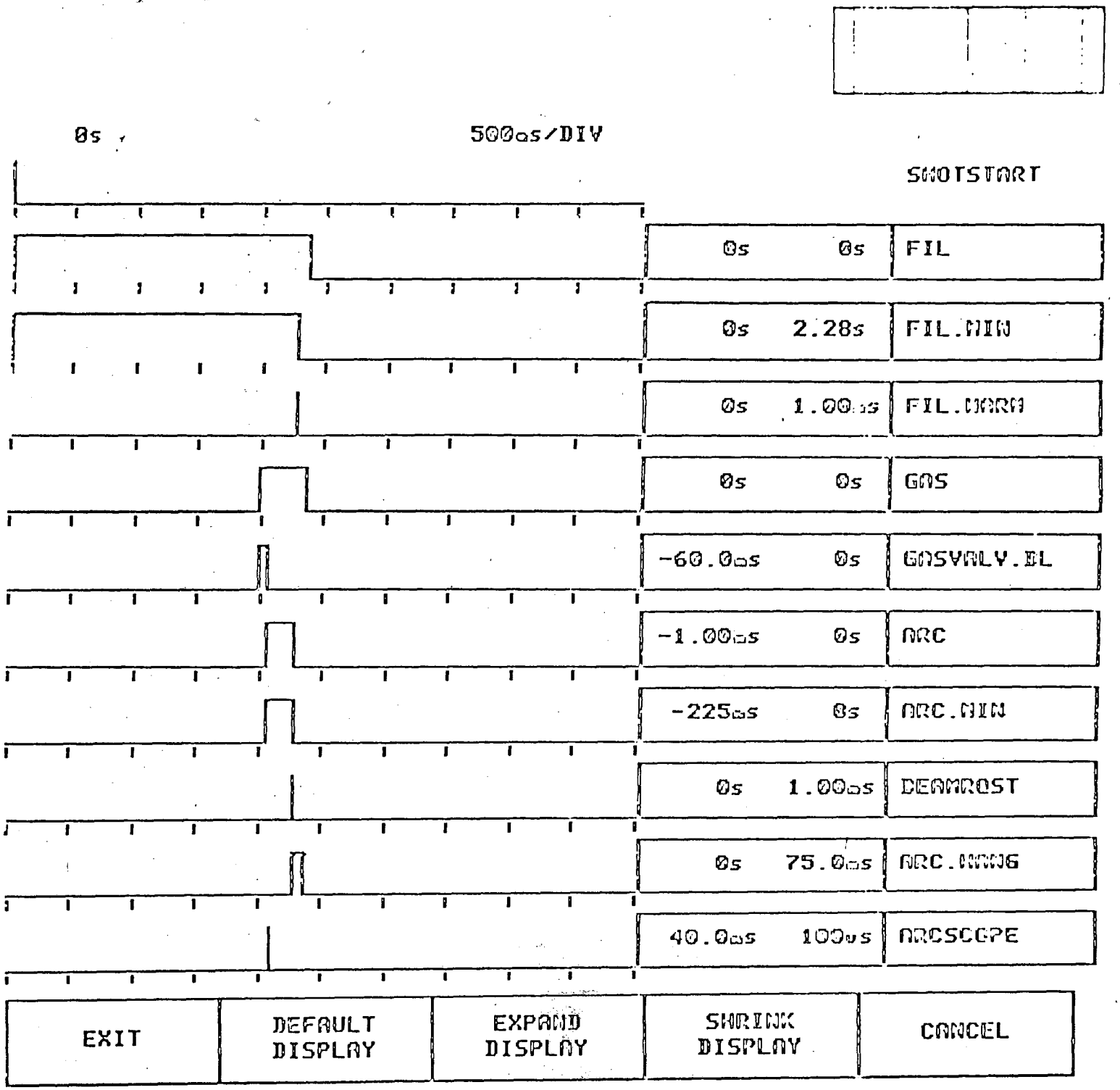

FIGURE 4-3 - A TYPICAL TOUCH PANEL CONTROL DISPLAY

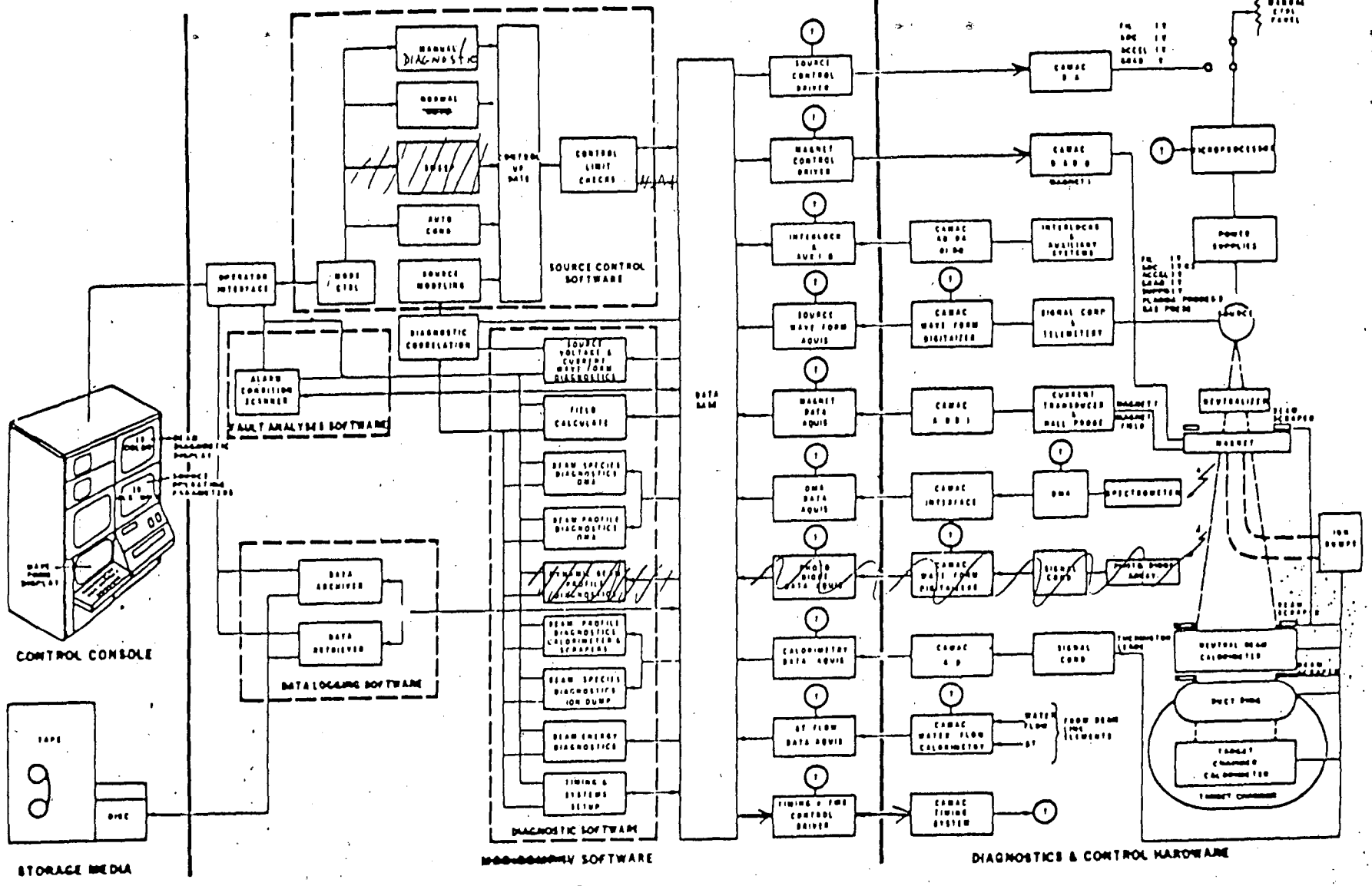

Fig. 4-2. Source Diagnostics and Control

SHOT 26644 DUMP CALORIMETRY MENU 03/03/81 00:45

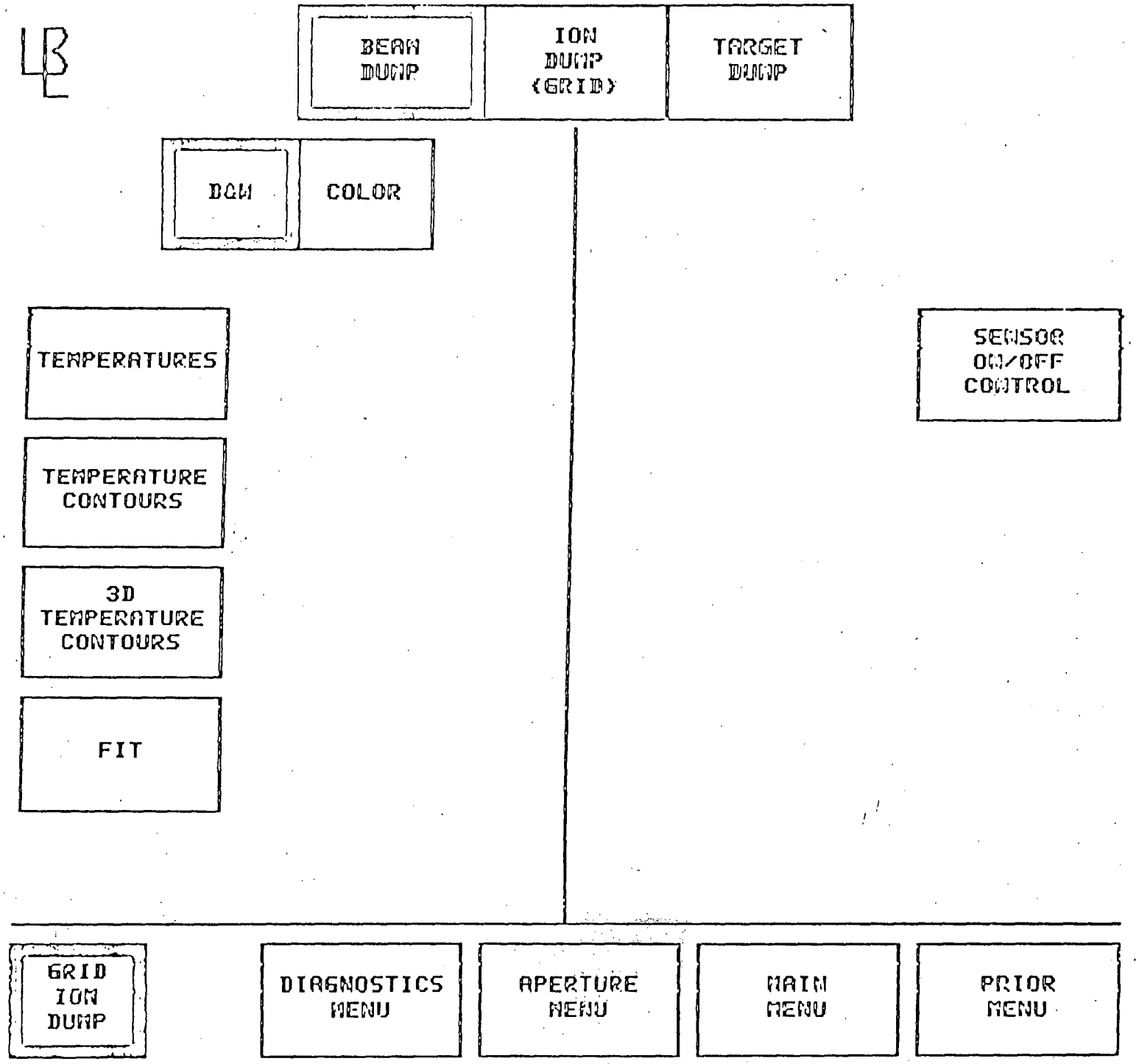

This report was done with support from the Department of Energy. Any conclusions or opinions expressed in this report represent solely those of the author(s) and not necessarily those of The Regents of the University of California, the Lawrence Berkeley Laboratory or the Department of Energy.

Reference to a company or product name does not imply approval or recommendation of the product by the University of California or the U.S. Department of Energy to the exclusion of others that may be suitable.

TECHNICAL INFORMATION DEPARTMENT
LAWRENCE BERKELEY LABORATORY
UNIVERSITY OF CALIFORNIA
BERKELEY, CALIFORNIA 94720