UC-38
LBID-455

Lawrence Berkeley Laboratory
UNIVERSITY OF CALIFORNIA

Engineering & Technical Services Division

RECEIVED
LAWRENCE
BERKELEY LABORATORY

APR 1 1982

LIBRARY AND
DOCUMENTS SECTION

For Reference

Not to be taken from this room

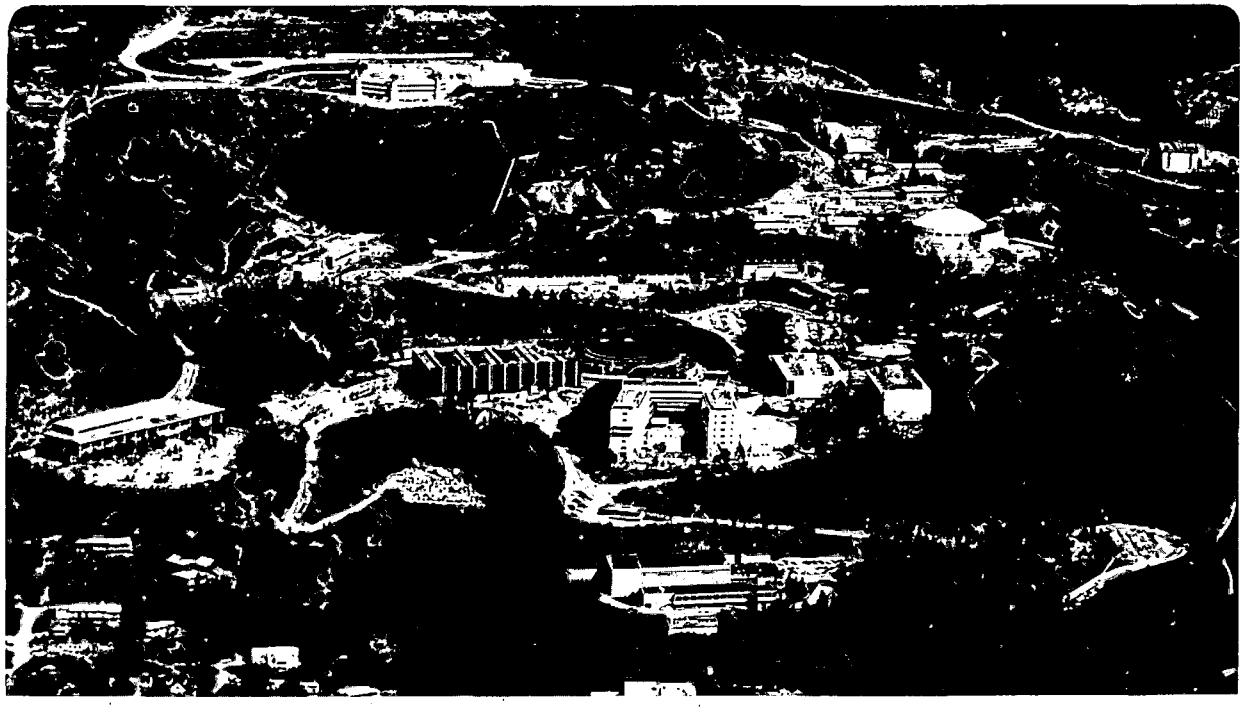

LBID-455
c.1

DISCLAIMER

This document was prepared as an account of work sponsored by the United States Government. While this document is believed to contain correct information, neither the United States Government nor any agency thereof, nor the Regents of the University of California, nor any of their employees, makes any warranty, express or implied, or assumes any legal responsibility for the accuracy, completeness, or usefulness of any information, apparatus, product, or process disclosed, or represents that its use would not infringe privately owned rights. Reference herein to any specific commercial product, process, or service by its trade name, trademark, manufacturer, or otherwise, does not necessarily constitute or imply its endorsement, recommendation, or favoring by the United States Government or any agency thereof, or the Regents of the University of California. The views and opinions of authors expressed herein do not necessarily state or reflect those of the United States Government or any agency thereof or the Regents of the University of California.

LAWRENCE BERKELEY LABORATORY - UNIVERSITY OF CALIFORNIA

ENGINEERING NOTE

CODE	SERIAL	PAGE
AA0102	M5818	1 of 53

AUTHOR	DEPARTMENT	LOCATION	DATE
MICHAEL A. GREEN	MECHANICAL	BERKELEY	NOVEMBER 18, 1981

PROGRAM — PROJECT — JOB

MECHANICAL ENGINEERING

REPORTS

TITLE

FOREIGN TRAVEL REPORT, 1980

ITINERARY AND SUMMARY

This report presents information gained during my offical travel to Europe from 29 May 1980 through 7 September 1980. This report covers visits made to Laboratories, shipyards, powerplants and conferences during the above travel. Some of the travel was official and was paid for by the Lawrence Berkeley Laboratory and the Department of Energy. Most of what is reported here was paid for by myself. A list of Institutions visited and the people I contacted is given as follows:

May 29 — Traveled to Europe via London

June 3-6 — The 8th International Cryogenic Engineering Conference, Genova, Italy

- I presented three papers on various aspects of the TPC magnet and it's cryogenic system
- Paid for by LBL and DOE.

June 9-13 — Institute fur Technische Physik (ITP)
Kernforschungszentrum Karlsruhe (KFK)
Karlsruhe, W. Germany (see end of itinerary).

June 16-20 — International Conference on Experimentation at LEP, Uppsala University, Uppsala, Sweden.

- I presented a paper on thin superconducting solenoid structure. This Conference was of direct benefit to LBL and DOE.
- Not paid for by LBL or DOE.

June 25 — Tafjord Hydroelectric Power Plant construction site, Tafjord, Norway.

- Contact: A. Bjornson
- Discussed various aspects of the construction of large Pelton type turbine power plants. I inspected the generator and turbine room and the Penstock structure.
- Not paid for by LBL or DOE

June 26 Hasund Mek, Werksted A/S Shipyard
6035 Ulsteinvik, Norway.

- Contacts: A. Hasund, J Hasund and O. Hasund.
- I visited the shipyard during contruction of half of a steel hulled vessel. I discussed engineering and construction difficulties of ship hull structures.
- Not paid for by LBL or DOE.

July 7 Fritz Haber Institute, Free University of Berlin, 1000 Berlin, Germany.

- Contacts: DR. G. Klipping, P. Buttner and U. Schotte.
- I discussed bare surface cryogenic pumping of hydrogen and deuterium on a 4.2 K surface. Various measurement techniques were presented to me. Cryogenic pumping of cold bore neutral beam injectors for fusion were discussed. Problems concerning the water retention and desorption in superinsulation were discussed. There was also some dialogue on the phase separation of helium I and helium II and the control of flow of helium II through a valve was discussed.
- Not paid for by LBL or DOE.

July 8-13 ITP, KFK, Karlsruhe, W. Germany (see end of Itinerary).

July 14 Sulzer Brothers, Winterthur, Switzerland.

- Contacts: H. Quack, C. Blazer, N. Eber and G. Hublutzel.
- I discussed various aspects of the failures that have occurred with Sulzer gas bearing turbines in the United States. Many of the questions we have had here at LBL were answered by Sulzer.
- Paid for by LBL and DOE. (A separate report on this visit has been circulated.)

July 15 - Aug 3 ITP, KFK, Karlsruhe, W. Germany (See end of Itinerary).

Aug. 4-5 International Cryogenic Materials Conference on Non-Metallic Materals at Low Temperature, CERN, Geneva, Switzerland.

- I gave a paper on vacuum impregnation techniques for large structures. The Conference delt with various composit structures at cryogenic temperatures.
- Paid for by LBL and DOE

Aug. 6 ISR Divison, CERN, 1211 Geneva, Switzerland.

- Contacts: T. Taylor, L. Resegotti and A. Asner.
- I gave a seminar on progress on the TPC magnet and on the results of the testing of a two-phase helium cooling system. I visted the ISR Quadrupoles and their cryogenic system. There were discussions on various aspects of superconducting coil design using full potted monolythic conductors.
- Paid for by LBL and DOE.

Aug. 7-12 ITP, KFK, Karlsruhe, W. Germany (see end of itineary).

Aug. 13 Return to US on business via Frankfurt.

Aug. 17 Return to W. Germany via Frankfurt.

Aug. 18-24 ITP, KFK, Karlsruhe, W. Germany (see end of itinerary).

Aug. 25 Brown Bovari Company, Kallstader str 1, 6800, Mannheim, W. Germany.

- Contact: C. H. Dustmann.
- I visited the turbine plant and the generator plant were generators up to 800 MVA were being made. I visited the transformer plant and looked at the facilities where the conventional coil for the JET torris are made.
- Not paid for by LBL or DOE.

Aug. 26-28 ITP, KFK, Karlsruhe, W. Germany (see end of the itinerary).

Aug. 29 DESY, Notkestieg 85, 2000, Hamburg, W. Germany.

- Contacts: G. Horlitz and S. Wolff
- I saw the CELLO detector in place in the PETRA interaction region. I gave a short seminar on thin solenoid magnets. My discussions delt with various aspects of the HERA project and discussed various design approaches on the superconducting dipoles and quadrupoles.
- Paid for by LBL and DOE

Sept. 1-5 ITP, KFK, Karlsruhe, W. Germany (see end of the itinerary).

Sept. 7 Return to the United States via Frankfurt.

Institute fur Technishe Physik (ITP) at the Kernforschungzentrum, Karlsruhe, Postfach 3640, 7600 Karlsruhe, W. Germany during various times during the summer of 1980.

- Contacts Dr. W. Heinz, P. Komarek, J. Erb, K. P. Jungst, G. Hartwig, H. Katheder, G. Krafft and P. Turowski.
- I was invited to the Intstitute fur Technische Physik to do consulting work for them on various aspects of superconducting coil work and cryogenic distribution. I gave three seminars on various aspects of cryogenics and superconductivity.
- Not paid for by LBL or DOE.

M.A. GREEN
FOREIGN TRAVEL REPORT, 1980

General Impressions of Europe 1980

The biggest shock upon landing in Europe was to find the increase in prices in England. Since the last time I was in London, in 1978, the prices have nearly doubled. (These are the prices in pounds sterling; the exchange rate with dollar makes the price increase even worse.) A few examples are the London underground for an average ride has gone from 25p to 50p; the price of beer per pint in the pubs has gone from 36p to 53p; food in the restaurants has gone from about £ 2.00 to nearly £ 4.00; gasoline has doubled or more as it has in the rest of the world; fruit in the markets used to be the cheapest in Europe - now it is the most expensive except for possibly Scandanavia.

London has become a city of Arabs and Iranians. Cheap hotels, which really don't exist anymore, used to offer bed and breakfast but now only offer a bed and the smell of Middle Eastern cooking as nearby Arab women cook in their rooms for their husbands. There appears to be growing resentment amoung native Londoners against the growing tide of Arabs and other Middle Eastern types; since I believe racism is a factor, this statement applies to other non-whites as well. Despite rather strict immigration laws, there is an increasing non-white population spreading the social problems this brings. England has no identity card, so once someone gets to England he can melt into the population. This is easy in the large cities.

Public transit is still good and British rails have improved even though fares have not kept up with inflation. The Royal Mail has declined just as ours has, telephone rates have been increased greatly to support the increasing number of drones in the Royal Mail system. Along with the increase in rates has come a deterioration of telephone service. France used to have the worst telephone service in Europe but, now I think England is going to take that honor.

The last two years, in my opinion, has seen a decline in the standard of living in England. The rest of Europe (Germany, France and Switzerland) has shown an improvement. The British policy of repressive taxation has taken its toll, only North Sea oil keeps things from being worse. British politicians allow the inflation to continue because it permits bones to be thrown to the all powerful public employee unions who are willing to go out on strike with almost no notice. The usual British stiff upper lip prevails. There is a lesson to be learned from the British, but I fear that American bureaucracy is following Parkinsons Law just as the British have. The positive thing in Britain is that there aren't too many attorneys and the British people aren't suit happy. We could learn from British law here.

West Germany is a contrast. Despite the worst inflation since 1949 (about 5%) the standard of living gain is real. Public services have improved without a large gain in taxes. Germany does not have a unitary tax law nor does the tax rate rise with the rate of inflation (this feature in american tax law is in itself very inflationary). Germans appear to be very concerned with even a 5% inflation rate. Fuel has been the major factor in German inflation. Fuel oil has nearly doubled in two years. Gasoline has gone up from 0.83 DM per liter to 1.16 DM per liter. The reason it's not worse is that the German gasoline price is 40% to 50% tax. The quality of the German railway service has improved, one can now get hourly inter city express trains north and south out of Karlsruhe. For example, the train time from Karlsruhe to Hamburg (about 750 km) has dropped to six and one half hours including stops.

Italy has shown a marked improvement in living standard since I was there in 1966. Italians are better dressed, there are few beggers and there is lots of new construction. Prices in Lira have gone up a factor of 4, but they are still among the lowest in the EEC. Italy was having a railroad slowdown when I was there, the railway workers were delaying trains so that everyone from one train had to get onto another. With trains packed like sardine cans the train workers would turn the heat on in the cars. The level of sweat and tempers would be on the rise, I saw sporatic instances of this. Some days the railways ran fine - other days there were never ending delays with plenty of hot Italian tempers.

A political election was in progress in Italy when I was there. The Communists were out in force with their banner signs and political rallys. The Communists would have street rock concerts which would attract hundreds of young people, then the politican would give his pitch in impassioned form with lots of waving of the hands and body movement. Of the 10-15 political parties, the Communists appeared to be the dominant political force in Milan and Genoa. They got about 31 percent of the vote.

Germany (at least in the Karlsruhe area) also had an election in progress. The German election process by comparison to the Italian or ours is a very orderly affair. There are signs for the parties: SPD, CDU, FDP, KPD, NPD, etc. but, no speach making or the continuous bombardment on TV of political messages. Political messages are sent through the mails. Most of the Germans I know study the list of candidates. Election turn outs in Germany are very high. My German and English friends offered me their condolences on the choice of presidential candidates. Most of them didn't seem to be keen on either Carter or Regan.

8th International Cryogenic Engineering Conference, Genova Italy, June 3 to June 6, 1980

The 8th International Cryogenic Engineering Conference (ICEC-8 from here on out) was held in Genova, Italy from 3 June through 6 June 1980. This conference is the continuation of a series of conferences started by Mendelson in London with ICEC-1. To date, this conference has not been held in the United States. It is felt that this conference complements the American Cryogenic Engineering Conference, CEC, which is held in odd numbered years within the United States and Canada. The Cryogenic Engineering Conference (CEC) has in recent years been combined with the International Cryogenic Materials Conference (ICMC). During even numbered years when ICEC is held, small topical ICMC conferences are held at various sites.

The ICEC conference deals primarily with cryogenic engineering problems associated with superconducting magnets, superconducting motors, space cryogenics, Helium II and other fluid heat transfer, some materials studies, refrigeration at temperatures below 100K, cryopumping instrumentation and cryo computers and LNG. This years conference has space cryogenics as its special topic. The long invited papers were given on the following topics:

(1) "Infared Astronomy", R.J. Van Dvinen, University of Groningen, Netherlands.

(2) "Space Cryogenic Systems in the 1980's", P.V. Mason of JPL Labs.

(3) Phase Separation Under Zero g Conditions", G. Klipping, Free University of Berlin, Germany.

(4) "Superconducting Cavities and Accelerators", A. Citron, Kernforschungszentrum Karlsruhe, W. Germany.

(5) "Heat Transfer in Superfluid Helium II", S.W. Van Sciver, University of Wisconsin.

(6) "Superconductivity and Cryogenics for Mirror Fussion", D.N. Cornish, LLL.

(7) "Perspective of Liquid Hydrogen as a Fuel for Transportation", K.D. Williamson, LASL.

(8) "Toward Absolute Zero", O.V. Lounamaa, Low Temperature Laboratory in Helsinki, Finland.

(9) "Superconducting Magnets for Tokamaks", P. Komarek, Kerforschungszentrum Karlsruhe, W. Germany.

(10) "Problems in Research and Technology of A.C. Loss Reduction in Superconductors", K. Kwasnitza, ETH, Zurich, Switzerland.

(11) "Applications of Superconductivity to Advanced Instrumentation", I. Modena, Institute for Physics in Rome, Italy.

(12) "Superconducting X and Y Ray Imaging Device", D. Hueber et al, ORSAY and University of Paris, France.

(13) "Properties and Behaviour of Liquid Helium in Rotating Machines", A. Hofmann, Kernforschungszentrum Karlsruhe, W. Germany.

(14) "Cryogenic Recycling and Processing", N.R. Braton, University of Wisconsin.

(15) "Large Scale Applications of Superconductivity", G. Bogner, A.G. Seimen, Erlangen, W. Germany.

(16) "Superconducting A.C. Generators, a Utility View", J.G. Steel, CEGB, Leatherhead, England.

(17) "Recent Progress on Heat Transfer to Liquid Helium", G. Krafft, Kernforschungszentrum Karlsruhe, W. Germany.

(18) "Cryogenic Liquid Production Plant of Large Tonnage", M. Grenier, L'Air Liquid, Champigny, France.

(19) "Magnetic Filtration", H.K. Collan, Helsinki University of Technology, Finland.

(20) "Cryogenics in China Today", C.S. Hung, Institute of Physics of Academia Sinica in Peking, Peoples Republic of China.

Before continuing with a dialog on what happened at the conference, it is useful to reflect on the people who attended the conference. There were over twenty (20) countries represented. People came from all over Europe except Scandinavia (Finland is the exception). The East block countries were well represented with people from the USSR, Czechoslovakia, Poland, Hungary and Yugoslavia. For the first time in my memory the Peoples Republic of China sent a fairly large delegation. There were no interpreters nor obvious Party men. This is quite a contrast to ICEC-4 where three Chinese attended, one being both a translater and a Party man. At that time the three walked together each in his Mao jacket with his Red Book. It should be noted that the Eindhoven ICEC-4 conference was the first scientific exchange for the Chinese since 1964. The large Chinese delegation this year was friendly and very willing to talk with as many delegates as possible. I met people from the Peoples Republic of China all over Europe. I met them at scientific institutes, at meetings and even on trains. This is a real sign of the changes that have occured in Chinese foreign policy over the last 5 years.

A. Space Cryogenics

The ICEC-8 conference theme was space cryogenics. The two invited papers showed the kind of astronomy that can be done with detectors which are cooled to cryogenic detectors. For example, cryogenic detectors aboard a satelite can be used to accurately measure the distribution of infared radiation at wave lengths above 35 m. This radiation band is extremely useful for studying the formation of stars in dense intersteller clouds. Space cryogenics takes place at a variety of temperatures from 120 K on down. For example, solid methane, nitrogen and neon are used as active materials to cool shield in cryostats and in some cases the experiment itself.

A lot of work on helium II cryogenics was reported on at this conference. G. Klippings group published several papers on this subject. I will report more on the work of the Klipping group later in this Foreign Travel Report under the heading of "Visit to the Fritz Haber Institute, Free University of Berlin. One whole session was devoted to the phase separation of helium II under zero gravity conditions. Porous plugs to separate helium II from gas and helium I liquid are used. There are problems with phase separation of liquids from gas in a zero gravity environment.

The infared sensors to be used in satelite require temperatures in the 1.4 to 1.8 K range in order to reduce the signal to noise ratio for signals comming from dense star clusters. Special techniques are required in order to maintain temperatures of 1.8 K for periods up to three years. Some of the infared experiment must remain in orbit at least one year. Those which are part of the Space Shuttle require cryogen storage times of 20 to 30 days. The cryostat heat leaks should be limited to values below 50mV for a cryostat which holds 500 liters of helium. One must be able to control flows of superfluid helium of $5 mgs^{-1}$.

One paper described a solid state refrigerator with no moving parts. The refrigerator is designed to produce 70 to 110 mW at a temperature of about 100 K. This refrigerator is unique because it uses the cryoadsorption properties of zeolite to produce a form of J-T expansion. The expansion (a rarifaction of the gas) as it is pumped into the zeolite provides the refrigeration. The idea is an interesting one for space use.

B. Helium II for Use in Superconducting Magnets

The use of helium II for cooling superconducting magnets is of interest in a number of different places. Among them are: the University of Wisconsin at Madison, LBL, Grenoble, and Saclay. The experimental work, for the most part, has been done in 1 atm helium II baths below 2.0 K using the "Claudet-Bath" principle reported by the Grenoble group in the Proceedings of ICEC-5, Kyoto (1974), pg. 265-267. The Wisconsin group reported on heat transfer to helium II. The two basic types of heat transfer described were 1) surface heat transfer between the metal and the bath, i.e., Kapitza resistance and film boiling, and 2) heat transfer within the bulk fluid. LBL reported on its helium II cryostat and magnet training within that cryostat. The commissariat at L'Energie Atomic Francais published two short pamplets on the properties of 1 atm helium II and the methods for producing 1 atm helium II.

C. Forced Cooling for LCT and Other Projects

The subject of forced cooling and the stability of superconductors in forced cooled systems was reported on by several groups at the Kernforschungszentrum Karlsruhe, SIN near Zurich, Switzerland, Brown Bovari in Switzerland and the group at Oak Ridge. All of this work is related to the large coil project work (LCT) which is going on in those places. Most of the work in forced cooling that was reported used single phase supercritical helium (the pressure is above 2.2 atm). However, my paper on two phase cooling produced a number of responses from people interested in forced flow.

One paper, presented by J.R. Miller of Oak Ridge, showed how to calculate the maximum pressure rise in a forced cooled Nb_3Sn conductor. This technique can be applied to any forced flow system including magnets like the LBL TPC magnet. The results of Oak Ridge can be summarized in a simple formula which fits measured data. The equation is:

$$P_{max} \approx 0.1 \left[\frac{P^2 L^3}{D_H} \right]$$

Where P_{max} is the maximum pressure (Nm^{-2}); P is the power density per unit volume in the cooling channel (Wm^{-3}); L is the length of the channel (m); and D_H is the hydraulic diameter (m). This can be applied to the TPC magnet because when the magnet quenches supercritical pressures are reached very quickly. In TPC, if the time constant for thermal transfer is 10 seconds, $P = 10^6\ Wm^{-3}$, L = 350 m and D_H = 0.015 m, then P_{max} 50 atm. If both ends of the magnet cooling tube can drain off the helium, then the maximum pressure P_{max} 24 atm.

Discussion with a number of people concerning forced cooled cable conductors yielded the following results. Conductors with Nb-Ti cable were better stabilized by forced two phase flow while conductors with Nb_3Sn cable seemed to be better stabilized using single phase supercritical helium. Experiments at SIN indicated that no flow in the channel was needed in order to get cryostability. The Karlsruhe people are going to look at this on their LCT conductor.

Forced two phase cooling in magnets still scares people because of the possible flow oscillations involved. Dr. Victor Leilin of the Kurchatov Atomic Energy Institute in Moscow told me they successfully cooled a Torrus type magnet using 48 parallel two phase flow circuits. Other people I talked to also used a number of parallel circuits. However, no one was willing to use a single series circuit in their experiments as LBL has. Our results, which showed no flow oscillation were a surprise to a number of people who thought that a circuit such as that in the TPC magnet might have problems with flow instability. The subject of helium pumps is of interest to a number of people for use in both single phase and two phase flow circuits. Most of the pumps people talked about were not capable of pumping across a pressure rise of more than 1atm. The pump Morpurgo built for CERN at OMEGA and the LBL pump are exceptions.

D. Refrigerator Turbines

There were a number of papers by Sulzer concerning their refrigeration plants. One helium plant was built by Sulzer for use on a British CERN experiment which was designed to be computer controlled. The plant worked as it was supposed to, but it had very few hours on it due to a delay in the experiment. The machine uses data loggers to gather data and some parts of the refrigerator are controlled by small microcomputers. The circuit is rather complicated, but it appears to work.

BOC announced that it was getting out of the helium refrigerator business and that it would no longer make a gas bearing turbine. This leaves only Air Liquid and Sulzer in the business. In Europe, the preferred turbine appears to be the Sulzer turbine, but Sulzer only sells them on plants built by them. In the United States, both the Air Liquid and Sulzer turbines have had problems. Perhaps the Department of Energy should pay one or more US companies to develop a reliable small gas bearing turbine in order to end our absolute dependence on foreign turbines.

I spoke to Dr. H. Quack and others at Sulzer on the problems which have bothered us. CERN has a number of Sulzer machines in the North experimental area. They have had only one or two turbine failures. The cause was the gas inlet valve shutting off too quickly causing an unbalance in the bearings. The CERN machines do not have water cooled compressors as a load. So, the problems found by Brookhaven have not been of concern at CERN. Sulzer feels that the lack of centering found in one of the LBL turbines was due to an error by CTi in manu facturing the refrigerator.

I asked Sulzer about contamination. Dr. Quack said this should be no problem because Sulzer turbines have operated with up to 4% air in the gas stream. He said there should be no contamination problem at 80 parts per million air found at LBL. Dr. Quack pointed out that Sulzer turbines have been operated wet with liquid helium dropping off the blades. However, the turbine has to have extra clearance to allow for greater expansion and contraction.

I talked to Dr. Quack about purification and purity monitoring in a helium plant. He feels that good purity monitors are necessary and suggests that

oxygen be the contaminent to the monitors. He said freon is a common contaminent because it is used to leak check heat exchangers. Dr. Quack said do not put charcoal or zeolite filters just ahead of the turbine. These become a source for contaminents once they are loaded and the contamination zone moves down the filter column. Liquid nitrogen temperature adsorbers are fine when they are put in the room temperature compressor supply stream. These filters should be either dual full flow filters or they should be on a by-pass. In all cases, a purity monitor should be down stream from the filter.

E. Cryogenics in Red China

Dr. C.S. Hung, of the Institute of Physics, Academia Sinica in Peking, summarized the cryogenic and superconducting work which is going on in the Peoples Republic of China. The Chinese are manufacturing in some form, all of the basic components for cryogenic and superconducting devices. For example, China is making their own 10 ℓh^{-1} and 50 ℓh^{-1} helium liquifiers and they also have a 100 ℓh^{-1} machine. Dr. Hung did not give any details about the machine or about how many have been made. Dr. Hung also talked about a refrigerator using the Gifford McMann cycle.

China has been making multifilamentary superconductor since 1972. These conductors contain up to 1000 filaments. The smallest filaments made to date are 5 M in diameter. However, this conductor is not reliable in quality so for reliable conductor one must use filament diameters of 20 M or more. China makes Nb_3Sn tapes by the diffusion process. They are doing experimental work with V_3Ga and other A-15 materials. They are also making small batches of experimental Nb_3Sn multifilamentary conductor by the bronze process.

China makes small Nb-Ti magnets up 8 Tesla field and they make small Nb_3Sn magnets with fields up to 11 Tesla. No production figures were given. China has built a 400 KVA superconducting motor and they have built magnets for magnetic separation. China's developing superconducting magnet technology for use in mirror fusion and MHD.

In addition to magnets, the Chinese have been doing work with cryopumps for space simulation chambers. No details were given, but I assume this is part of their ICBM and satelite program. Dr. Hung also mentioned experimental and theoretical investigations on Josephson devices and squids. From all appearances the Chinese are making a real effort to catch up. Chinese scientists and engineers are found working in scientific institutes all over the world. For example, there are two mainland Chinese working in the superconducting magnet group at the Kernforschungszentrum Karlsruhe.

F. Bits and Pieces of Information Gathered at ICEC-8

Superconducting R.F. cavities are still of interest in high energy physics. Unfortunately, high energy gain per meter do not seem to be reliably obtainable. There were reports of cavities being made by a Genova group which have energy gains of 7.5 to 8.2 MeV per meter. Prof. Citron of the Kernforschungszentrum Karlsruhe, points out that reliable cavities can be made so that energy gain of 3-5 MeV per meter can be made. This is still important because superconducting cavities save energy. As an example, the LEP machine to be built at CERN has a power limitation of 96 MW. Conventional R.F. cavities can produce electron position energies of 80 GeV. If the cavities are pushed to the limit and the beam current is allowed to drop to zero, 90 GeV energies can be achieved. Reasonable beam currents with superconducting cavities can be achieved at energies of 115 GeV (3 MeV per meter cavities to 130 GeV with 5 MeV per meter cavities.)

The Cello cryogenic system was described and experimental results were given. The Cello magnet is forced two phase cooled with horizontal channels on the outside of the magnet. The two compensation solenoids are helium bath cooled. Three parallel cooling circuits are used. A total of 50 meters of transfer line are in the system. The estimated heat leak to the transfer line is 0.6 to 0.7 Wm^{-1}. The main CELLO magnet heat leak was 10 Watts plus 12 liters per hour of liquid helium for the leads. The main CELLO magnet plus its transfer line was 20 Watts plus 12 liters per hour for the leads. The 'A' compensator solenoid plus its tranfer lines uses 16 Watts plus 7 liters per hour for shields and leads. The 'B' compensators and its transfer lines uses 18 Watts plus 9 liters per hour for the leads and shield. All totaled the refrigerator is required to deliver 54 Watts plus 28 liters per hour (this is equivalent to a refrigeration load of around 130 Watts). CELLO has a 250 Watt refrigerator. All and all, the TPC magnet cryogenic system and the CELLO system are comparable.

There were a couple of papers given on composite materials. One paper described rods made from ordered 'R' glass in an epoxy matrix. With 75 percent glass in the rods a rod modulus of 4×10^{10} Nm^{-2} should be obtainable. The thermal conductivity integral from 4 to 80K is about 15 Wm^{-1} (comparable to NEMA G-10) but, the breaking strength is greater than 6×10^{8} Nm^{-2}. One paper reported on the use of carbon fiber epoxy composites for support rods. The thermal conductivity integral is supposed to be half that of NEMA G-10 and the modulus is very high, 2×10^{11} Nm^{-2} or greater. The breaking strength of the composite is supposed to be in excess of 10^{9} Nm^{-2}. The total thermal contraction coefficient is nearly zero. LBL should strongly investigate the use of carbon fiber composites for all kinds of things.

Impressions of Europe 1980 (Part II)

Scandinavia is as expensive as it has always been. Prices in Scandinavia have not advanced at a much faster rate than US inflation (unlike England). Copenhagen is probably the most expensive city in Scandinavia, but not Europe. From what I have seen on this trip, London holds that honor. London used to be clean and reasonable in price but now it is neither.

Scandinavia, Copenhagen and Norway in particular, have changed considerably since I was last there in 1973. For example, Copenhagen has become dirtier and the people are much more casual in their dress. (Levis are worn by any women under the age of 30. The Levis worn by the women cost around $50.00 per pair). The beer in Denmark is as good as it ever was. The copper roofed buildings in Copenhagen still contrast with the surrounding brick. Unlike many cities in Europe, Copenhagen has not become a city of high rise buildings (the SAS building near the railway station is a notable exception).

Sweden is a country of friendly people most of whom speak passable to good English. (The Swedish school systems require English to be learned by all students. German or French is a second language required of all students. Sweden is a country of 8 million people. Most other Europeans do not speak Swedish so Sweden requires their people to speak other languages. Only the Netherlands has a universal foreign language requirement.) Stockholm is a clean city with many impressive vistas. It is a more agreeable city than most large cities. Stockholm is probably the cleanest city in Europe, but Oslo in Norway or some German cities may argue that point.

Uppsala, Sweden is an interesting historic town with its 16th century castle and its 14th century gothic cathedral. The Uppsala Cathedral is the largest church in Sweden. It is decorated inside by painted designs and scenes on the stone. Very little of the interior of the cathedral is not painted or covered with tapestry. In recent years the paintings inside the Uppsala Cathedral were cleaned. The cleaning was painstakingly done using loaves of bread as a cleaning agent.

Uppsala University, founded by the church in about 1450, is the oldest university in Scandinavia. The university has several outstanding buildings. The Gustavarium has an intact anatomical theater where disected bodies could be looked at by a hundred people at a time. The theater is lit by natural light streaming in through two banks of windows going completely around the ceiling of the theater. The main university building, built during the last century, is impressive in its architecture. The main library has on display a fine collection of rare books, manuscripts and maps. Included in the collection is an old bible printed with silver letters.

As one goes North in Sweden, one runs into the Tiaga. Forests of birch, hemlock and fir extend for miles and miles. This belt of forest (the Tiaga) extends on across Finland, Russia and Siberia. The Tiaga extends well above the Arctic Circle. I went to 69 degrees North on a 21 hour train trip from Uppsala to Narvik, Norway. The sun really does shine for 24 hours on the 21st of June. Northern Sweden has a huge iron mining complex at Kiruna.

(Kiruna is said to be the largest city in the world in land area, 3,000 square miles, but it has less than 20,000 people who work the huge iron mining pits in Kiruna). The rails to Narvik, Norway and to Southern Sweden carry hundreds of thousands of tons of iron ore which is up to 70 percent iron. The railway terminates at Narvik, the northernmost point in the world reached by passenger railway.

Narvik is at the sea end of a long fjord which provides year-round access to the sea for Swedish iron ore. The center of Narvik is dominated by a huge iron ore storage and shipment complex. The rest of the town is typically Norwegian with bright colored houses with sharp peaked roofs. At the time of the summer solstice (21 June), the sun does not set for nearly one month.

The country between Narvik and Trondheim is central Norway, probably the most spectacular in the world. The fjords are spectacular as are the canyons filled with firs and birches. The country is rugged (particularly as you approach the coast) and so are the people. I have noticed considerable improvement in a section of coastal Norway where I have spent time on several occasions during the last 15 years. There has been considerable improvement in public services over the last seven years in particular. Roads have been paved, bridges and sewers have been built and towns have grown. People pay a lot of taxes, but don't complain too much about it. Unlike the US, there seems to be an improvement in the standard of life despite the high taxes. You don't hear the complaints you do in the US or England about the quality of public services and schools. The bureaucracy does not seem to be evident to the traveler, but I'm sure it is present because I heard more than one Norwegian complain about government instrusion into their lives. One comment I can make is that the Scandinavian postal services work. The Swedish post is very good. Deliveries are fast and reliable. The US postal service is only slightly better than the Italian mail. That is bad.

Comments on Prices: The price of many foods is almost double what it is in the US. This is true in both Norway and Sweden. Swedes earn more than Americans, but Norwegians do not. Norwegian shipyard workers are paid $7 per hour compared to $15 per hour in the U.S. Gasoline in Sweden is $2.75 per gallon. Gasoline in Norway is $3.05 per gallon. A good part of the price in both cases is tax. Norway is probably the only country in Europe which is energy self sufficient. Hydroelectric power is cheap, about 2 to 3 cents per kilowatt hour. The only power in the U.S. which is cheaper is in the Pacific Northwest. Norwegians use a lot of electricity. In Western Norway houses are often heated electrically. However, Norwegian houses are well insulated and have double paned glass windows. The winter temperatures are warmer in West Norway than in the Eastern U.S.

International Conference on Experimentation at LEP, Uppsala University, Sweden
June 16th through June 20, 1980

This International Conference was organized jointly by the European Committee for Future Accelerators and the Gustaf Werner Institute of the University of Uppsala. Support for the Conference was received from CERN, the Swedish Government, the Swedish Science Research Council NFR, the Royal Swedish Academy of Sciences KVA, DESY, Institute National de Physique Nucleaire et Physique des Particules IN2P3, CEA Saclay, the Organizing Committee of the LEP Summer Study in Les Houches 1978, and the Physics Journal Scripta.

The conference, held from and including 16-20 June 1980 at Uppsala University, had both oral sessions and poster sessions. For the most part, there were not parallel oral sessions except for the afternoon of the first day (a session on Synchrotron Radiation was held in parallel with a session on Particle Identification). The posters were up continuously starting on the second day and through the end of the conference. Since the posters were up continuously, the authors of oral papers could refer to various posters for detail on various techniques. Once a day for one half hour when there were no oral sessions the authors were at their posters available for comment. This method of running a poster session is superior to any I have seen. I think it is an excellent idea to have poster boards up all during the conference instead of just during a short session held in parallel with one or two other sessions. All it would call for is either a bigger room with more poster boards or it would call for limiting posters to smaller boards and putting them all in the same room.

Physicists from all over the world were invited to the LEP Conference. Nobody showed up at the conference from the Soviet Union, including Russians who are in residence from CERN. The conference organizers were surprised by the fact that no Russians showed up. The only East block country which sent anyone was Poland. The conference was attended by mostly West Europeans (about 90 percent). CERN sent nearly 100 people; DESY sent nearly 20 people, various French laboratories sent over 50 people; Italy sent over 30 people; Germany, outside of DESY, sent over 20 people and so on. American participation was limited by the Department of Energy. Probably one half of the US delegates were funded by the Department of Energy or its Laboratories. This is a poor turnout particularly in light of the apparent American decision not to pursue electron-positron physics in the 100 GeV region. (I realize this decision may be changed by the time this report is printed and distributed, but at the time of the conference, that was the decision of the Woodshole Panel). The only opportunity for Americans to pursue physics in this energy region may be at LEP in collaboration with European groups.

The conference opened with a discussion of positron-electron results recently found at PETRA. A discussion of why positron-electron physics at a 100 GeV followed. W. Schnell of CERN discussed the development and construction work on LEP. Then it was announced that H. Schopper will be the new director at CERN. (Schopper will step down from the directorship of DESY.) In his talk on the preparation of the experimental program at LEP, H. Schopper announced a speed-up of the LEP schedule by two years. (LEP is to be completed in 1986 instead of 1988.) Given the bad state of high energy physics in the US, it is likely that Europeans will beat the US into this energy range by a considerable amount of time.

For me this conference was a learning session on modern high energy physics. There were many interesting papers on cerenkov counters, scintillator systems, drift chambers, various calorimeters, and data handling systems. Since I am an expert in none of these fields, I will leave the description of these systems to experts in the field who were there and have submitted foreign travel reports to DOE.

Before discussing papers on subjects on which I am facile, I wish to make an observation. There is one type of detector and particle identification scheme which is universally acclaimed to be the best thing that has come along (well, almost universally acclaimed). This detector is the TPC. If the TPC works as well as it is designed to, it will be a major contribution to high energy physics. David Nygren had to say very little at the conference for others were praising the virtue of the TPC for him. The development and perhaps the construction of a super TPC detector could be one positive contribution that American collaborators could make in a LEP experiment. It is not the only contribution, but it is an important one.

To me, the most interesting paper of the LEP conference was the paper "The Choice of Spectrometer Magnets for LEP" given by Tom Taylor of CERN. The primary message he gave was that the magnet and the experiment have to be designed together. This is particularly true if the magnet is a superconducting magnet. The second message T. Taylor tried to get across is don't overestimate your need for magnetic field. The cost of magnetic field goes up at a rate of the induction squared and the field volume to the first power.

Magnetic fields are needed for charged particle recognition and momentum resolution. Superconducting magnets are not always best. (I concur with this statement even though I am a builder of superconducting magnets). The break-even point (from an economic standpoint) for superconducting versus conventional magnets occurs when the magnet power usage is above 2 megawatts (I agree this is a correct assessment). Tom Taylor points out, however, that the decision is often made on political grounds. For example, the superconducting option is chosen because of the appearance of saving energy, or the conventional option is chosen to gain a few months, but the experiment drags on because some key detector is late. (In such cases the superconducting option can be used later. Often the physicist has boxed himself in so much that the superconducting option can never be economically used.)

T. Taylor addressed himself to the subject of thin superconducting solenoids. According to the studies done at CERN, the larger the solenoid diameter the lower the field has to be. This has nothing to do with economics. The main problem is low energy particles spiralling within the magnetic field making it difficult to separate them out. Too many channels of electronics become involved in recognizing a single track. As a result, detector resolution goes down. The optimum thin solenoid, which is say a half a radiation length thick, would have a central induction of 1 Tesla and a detector (outer) radius of between 1.5 and 2 meters. The momentum resolution of such a detector system would approach one percent. Such a magnet is on the edge of technical feasibility, provided one doesn't have to have a thick wall for a pressure vessel such as the TPC magnet does. It is probable that such a device would require the use of carbon fiber or Kevlar fiber composites. A honeycomb Hexel material would be attractive for the cryostat.

When the diameter of a solenoid exceeds 3.5 or 4.0 meters, thin solenoids are not practical. Neither is the use of iron return yokes (unless the iron itself is a part of some kind of detector). Privately, Tom Taylor and I talked about the feasibility of using guard coils of large radius to buck out the field. In LEP, where straight sections are quite long, this approach may be feasible. The guard coil might have a radius which is double that of the experiment field generating coils. The current (total ampere turns) in the guard coil is chosen so that the net magnetic moment of the guard coils plus field generating coils is zero. The field generated by such a system of coil drops off very rapidly. Studies of systems intended for use in the Space Shuttle show that the stray field would drop to a level of 10 Gauss some 12 meters away from a 3-meter-diameter coil system operating at a central induction of 1.0 Tesla.

There was some discussion about very large solenoid magnets where all detectors are inside the magnetic field. The guard coil concept would probably be necessary in this case. In addition, magnetic shielding of the beam tube would also be necessary at or near the ends of LEP straight sections. The coils proposed in this case would be 6 to 8 meters in diameter. The central induction would be 0.25 Tesla. The use of superconducting coils is warranted if a simple method for winding these coils could be found. One solution is to build a semiflexible liquid helium transfer line (liquid nitrogen shielded, I assume) which can carry a current of 12,000 A in superconductor soldered to the pipe (which has a cross sectional area of about 1 cm^2, this appears to be adequate to do the job). The transfer line (vacuum chamber and all) is wound in two layers onto the inside of the concrete tunnel wall. The idea is wild at first glance, but it merits further study should large magnetic field volumes become necessary.

Tom Taylor brought up the idea of the wrap-around thin solenoid. The idea is fraught with difficulties because the detector is buried in the two halves of the coil. However, near 4π coverage with minimum thickness coils can be obtained. This is another idea that is worth exploring. It is, in fact, receiving some study at Fermi Lab and Cornell.

The idea of Torroid has been discussed at CERN. It is attractive for the following reasons: (1) there is no field on axis; (2) there is no need for compensation coils; (3) there is no iron yoke (needed for the return of the magnetic flux); and (4) charged particles are deflected in only one plane. Recent developments have made these features less attractive. (Solenoids can be compensated using skew quadrupole; the iron yoke may be needed for calorimetry anyway; and modern software makes particle trajectories relatively easy to unravel. The major drawback of the toroid is that particles must traverse the inner coil structure before they can be analyzed. If the toroid is superconducting, only a lumped coil system makes any real sense. Tom Taylor has studied the toroid problem extensively. For some types of physics experiments the toroid could be very attractive.

Tom Taylor discussed briefly the problem of Dipole Detector Magnets. These have to be relatively low field devices with other dipoles to compensate the field generated by the detector dipole. Beam perturbation is one problem and the increase of background due to synchrotron radiation is another problem. If the problems become insoluble close attention must be paid to toroids or beltbuckle type magnets. These magnets become interesting for drownstream detectors. (For example, experiments like PEP-9.)

Visit to the Tafjord Hydroelectric Power Plant and the Hasund Shipworks June 25th and June 26th 1980

This section of the foreign travel report is of little interest to the Department of Energy but it may be of interest to LBL Mechanical Engineering people. On June 25, 1980, I visited the construction site for Tafjord Number 5 Hydroelectric Power Station. On June 26th, I visited the Hasund Mek. Werksted A/S in Ulstenvik, Norway. Both were interesting from an engineering standpoint.

A. Tafjord Power Station

The Tafjord power station complex is located about 10 km up a canyon from the head of Tafjord. (An arm of the sea which extends some 50 miles inland from the open ocean). The trip to Tafjord took some three hours of driving and ferry boat riding. The last bit of distance to the head of Tafjord was by ferry boat for some 10-12 km. The new road from the ferry port to the village at the head of Tafjord is not finished. There remains a road tunnel some 3.5 km long to be finished. I understand that the road bore is nearly half completed.

The Tafjord power station has four operating units with a capacity approaching 400 MW (so I understand, my Norwegian is not very good). Unit Number 5 is the last new unit to be put in that region, but there are plans to upgrade unit Number 1 which was built during the 1920's. There is considerably more hydroelectric potential in the Tafjord region but it is either expensive to exploit or it is environmentally damaging to the valley. (Norwegians don't worry about endangered species such as snail darters and garter snakes, but they do worry about changing the basic charactor of a beautiful valley which has prime tourist potential.) The Tafjord power station complex uses the water from, I would guess, tens of square kilometers of land at an elevation above 900 meters above sea level.

Unit number 5, which is under construction, is a single hydroelectric generator rated at 135 MW. The power plant is located by traveling through a tunnel some 500 to 600 meters long under a mountain. The access tunnel is in itself an impressive piece of engineering. The tunnel is about 5 meters high and some 7 meters wide. Two large diesel trucks can be driven two abreast through the tunnel. The ventilation pipes into the plant area are over a meter in diameter. Air is supplied by large fans located at the tunnel mouth. I was surprised to see diesel driven equipment being used at the plant site so far underground. My experience in mines has been that no internal combustion equipment is used, just electric and air driven equipment.

The power plant hall is about 18 meters high, 9 meters wide, and 25 meters long. It is carved out of solid granite except for a concrete craneway some 15 meters above the floor. The turbine will be mounted in a mounting around 5 meters in diameter. The entire 135 MW comes from a single vertical shaft pelton turbine set with the generator on top. The man who talked to me didn't know much about the turbine or the generator, except that it was a single 135 MW Pelton type machine. (The 135 MW, to my understanding, is the generator rating.)

The turbine is fed by a penstock some 1.5 meters in diameter (I saw only one of these penstocks and from what I could see the system was designed to have only one penstock.) The lower end of the penstock is made from 50 mm thick 52 grade steel (I will explain the steel designation later, for that is a story in itself.) If I understood the Norwegian correctly, the upper end of the penstock is a large tunnel which is carved out of the granite itself. The upper end of the penstock is at an elevation of 950 m; the generator room is at an elevation of 450 m. Hence, the reason for choosing a Pelton type turbine is clear. The P G & E plants in the Sierra which have heads of 1500 to 2500 feet all have pelton type wheels. However, the largest single wheel I know of in the Sierra (the Moccasin Creek plant) has a single 20 MW turbine.

The water leaving the plant drains into a lake behind a 60m high arch dam which is to regulate the flow of the river down the valley to the Tafjord. The surface of this lake is some 450 m in elevation. There is the potential for considerable hydroelectric power between this lake and Tafjord below. This apparently will not be utilized for environmental reasons.

B. Visit to the Hasund Shipyard

The Hasund Mek. Werksted A/S is typical of a number of shipyards found all over Southern Norway. Norway is a seafaring nation which needs any number of ferry boats, lifesaving boats, fishing boats and boats for coastal shipping. The Hasund works is primary a steel fabricator, but they do basic machine work as well. The Hasund works have built complete steel hull boats up to 70 meters in length (including finish work.)

The Hasund works was building half of a ship for coastal container shipping; the other half is being built by another yard. The half ship section is a bow section which is 55 meters long, 17 meters wide at the widest point and has a draught of over 10 meters. The weight of the section is just over 850 metric tons for which the Hasund work is being paid 6000 Norwegian Kroner per ton for fabrication. The steel is supplied by the prime contractor. The yard, which has nearly 40 employees, was to finish the work in a little under 10 months from start to finish.

A ship hull is made from thousands of small pieces of steel plate forming a series of steel boxes which carry the steel skin which covers the honeycomb box-like structure. The boxes themselves are made from 9.5 mm thick 42 steel plate while the hull sheath appears to be made from 12.7 mm thick 42 steel.

I asked what the designation 42 steel and 52 steel meant. I was told that this is carbon steel with a certain amount of nickel in it. The 42 steel has a yield strength of 42 kg per square millimeter (4.1×10^8 Nm^{-2} or 59000 psi). The 52 steel is rated at 52 $kgmm^{-2}$ (5.1×10^8 Nm^{-2} or 73000 psi). I could not get an equivalent to American steel standards. It would be interesting to compare this with German steel standards. So there will be more said on steel later.

LBL is not the only place where bad engineering and questionable workmanship occurs. The bow section of the ship at Hasund shipworks had to be rebuilt because of a combination of errors in engineering and fabrication. (The engineering was not done at Hasund.) The box plate structure has formed steel sections which form the shape of the hull. In the section to the aft of the bow (the bow itself in only about 10 meters long), these shaped plates are 65 centimeters apart. This is clearly stated in all drawings. However, in the bow section, the plates are to be only 60 centimeters apart. Only one drawing gives this piece of information. All of the other drawings have no dimensions on them at all. (This is a violation of Gene Miner's basic engineering rule which states that all drawings shall contain all vital information.) As a result the first bow structure was 70 percent built using the 65 centimeter spacing which is used in the rest of the ship. This is an example of a costly mistake good engineering could have avoided.

The Hasund works has no computer controled machine tools nor do they seem to need such tools. The closest tool to a computer controled tool is the electronically controled flame cutter for steel plate. This tool uses an electric eye to follow a line on a full sized drawing of the steel part. The photo-electric eye follows the line and flame cuts steel plate up to 20 mm thick to an accuracy of about 1 mm. The full size layouts are made on special paper which is up to 5 meters wide. A loft similar to a sail loft is used to make these full sized drawings. The largest lathe in the ship will machine shafts up to 1 meter in diameter and 5 meters long.

The work force at the Hasund works is primarily men but there are a number of female welders. The average wage of a person with 5 or 6 years experience is 35 N Kr. per hour (just over $7.00 per hour) plus tax free benifits. (For example, state supplied medical care, retirement, disability insurance, life insurance etc.) About 35 percent of the salary is paid out in tax. (The incremental tax bracket approaches 60 percent.) The tax rate rises steeply when the hourly rate is increased greatly. (Overtime work is discouraged by the tax rate.) In addition to an hourly wage there is a profit sharing plan which pays a fairly large Christmas bonus when a job is successfully and profitably done. There are no labor unions at the Hasund works. I would imagine that the shops work in an efficient way. The primary labor problems at Hasund have to do with the constantly changing government rules (most of which have never been passed by the Norwegian Parliament). Doesn't that sound familiar?

Visit to the Fritz Haber Institute at the Free University of Berlin, July 7, 1980

Before discussing the visit to the Institute, I will describe my impressions of Berlin and the crossing of the DDR (German Democratic Republic or East Germany) to get there. I took the train from Hamburg to Berlin through one of the three train corridors established by the 4 power agreements after the second world war. The railway cars on the train were supplied by the Deutsche Reichbahn DR (the East German Railway system using the same name that Hilter gave the entire German rail system during the 1930's). The DR cars are not to the same standards as those of the West German railroads; even first class cars are filthy, I have smelled better outhouses than the toilets on these cars. The stink permiates down the car so badly that a smoking compartment becomes a relief.

Crossing the East German border requires the stamping of transit Visas in your passport and the collection of tickets. The enrail pass is not good from the East German border to Berlin. You cross the border with it's barbed wire fence, mine fields and watchtowers. For one or two kilimeters inside the fence you see no life. East Germany compared to West Germany is like night and day. Most of the roads crossing the tracks are not paved even though there are crossing gates at each and every crossing. Rural houses on the farms are in a sad state of disrepair. Buildings get built but not maintained. I ran into this in Czechoslovakia three years ago. There I had a hotel with a cold water tap which ran continuously at 200 gallons an hour. I reported it to the hotel. They said it would take 3 months to fix because permission had to come from the proper Government Bureau, and besides the water is free. There is plenty of evidence of this kind of thinking in East Germany.

Berlin is a tragedy of the second world war. Undoubtedly, if Berlin were a united city in West Germany, it would be the greatest city in Europe. There is a tendancy of some to dismiss Berlin as a rather unimportant backwater city. Nothing could be further from the truth. Both west and east Berlin have developed in separate and distinct ways. Outsiders divide the city into two parts but within Berlin there is Berlin and the other Berlin. (In West Berlin it is Berlin and East Berlin; in East Berlin it is Berlin the capital of the DDR and West Berlin). As a tourist, I traveled in both parts of Berlin. It should be pointed out here and now that none of the travel to Berlin or within Berlin was paid for by the Department of Energy or the U.S. Government. No business was conducted in the DDR or East Berlin. The comments contained herein may be useful to those contemplating travel to Berlin and/or the DDR on offical business or otherwise.

West Berlin is one of the liveliest cities in Europe. The city lives as if there is no tomorrow. There is no german city like Berlin. West Berlin is Munich, Hamburg, Vienna and Paris mixed and rolled into one. Kurfustendamn, the main street of West Berlin, bustles with activity at all times including Sunday and Sunday evening. German cities, as a general rule, are dead on Sunday but not west Berlin. Reasonable hotels can be had near Kurfustendamn. Go to the Kiosk outside of Zoo station; they can arrange rooms for you as little as 25 DM for single. The Drei Baren restaurant on Kurfustendamn

(about 1 block from the ruins of Kaiser Wilhelms' Church) is as good or better than it was 15 years ago. A good meal with 1/2 liter of Pilsner beer can be had for 17 or 18 DM.

East Berlin has made remarkable changes in the last 14 years. Over half of East Berlin was still in rubble in 1966. Now most of the rubble has been replaced by either open space or new sometimes drab, sometimes garrish buildings which start to fall apart after they are built. East Berlin has developed it's own character, even it's own pride, but is still like an orphan stepchild compared to it's counterpart in the west. Only recently has any attempt been made to restore the beautiful Schinkel buildings in the center of Berlin (all of these building are in the eastern zone). These buildings represent the finest of 18th century german architecture. Many have 35 years old trees growing out of the rubble. About half of the Schinkel building are now undergoing rebuilding some 35 years after the end of the war. This and the wall are the tragedies of Berlin. Despite all this Berlin will not die.

I went to East Berlin on the S bahn and came back on the U bahn. The S bahn which is run by the DDR and the U bahn which is run by the West Berlin transit authorities only allow entry to East Berlin at the Friedrichstrasse station. (The other point of entry to East Berlin from the West is check-point Charlie which goes through the Berlin wall.) Entry procedures have been streamlined somewhat, so it takes considerably less time to go through than it did 14 years ago when I last went to East Berlin. You pay 5 DM for a 2 day Visa and you must change 6.50 DM to 6.50 East German marks (The 1 to 1 east to west mark exchange rate is a joke because the unoffical rate is 5 east marks for 1 DM).

Transit in the east is cheap, 20 to 50 pfennings per ride compared to 1.50 DM in West Berlin. Cars are expensive and take years of waiting to get. Gasoline is about $4.00 per gallon, so I understand. As a result, you see few private cars on East Berlin streets. The contrast of some to none in 1966 is remarkable. There are no traffic signals in east Berlin; there is no need for them. On the other hand, Kurfustendamn is thick with continuous traffic. Being a pedestrian or a bicyclist is downright pleasant in East Berlin.

There is no way to see Brandenburg gate up close. On the west side (the closest approach) is the wall. On the east side there is a barrier some 150 meters from the gate. The region between the barrier and the wall is patrolled by machine-gun-toting guards. One of the funniest scenes in East Berlin (if you think anything is funny there) is the changing of the guard at the monument to those who died in wars of militarism and fascism. Yes, you guessed it, the guards look like something out of Hitler's propaganda films as they goose step down in front of the monument. There are many things about the DDR that remind one of Hitler's Reich.

A. The Klipping Group

The Fritz Haber Institute is part of the free university of Berlin located some 12 km southwest from the bustle of Kurfustendamn. The area around the free university is surrounded by trees, green with leaves. It is a quiet

beautiful part of the city. The Fritz Haber Institute is basically a Physics Institute. I spoke with Pr. Dr. G. Klipping the head of the cryogenic research effort there. Klipping is one of the best known cryogenic physicists in Europe. He is extremely well thought of in cryogenic circles around the world. While visiting the Klipping group, I spoke with Dr. G. Klipping, Dr. P. Buttner, and Dr. U. Schotte.

The Klipping Institute has done work in cryogenics for many years. Klipping and his students have done some of the basic research into the contruction and testing of various type of cryogenic pumps. Klipping and his group literally developed modern surface condensation pumps, which in Germany are marketed by Leybold Hearious in Koln. He has also done considerable work in the field of cryoadsorption pumping into various materials; as a result, some of his people are very knowledgeable in the field of vacuum. Klipping's group has also been working with He II (helium in the superfluid liquid phase at temperatures below 2.2 K). He is heavily involved in the cryogenic system for GIRL, an infrared telescope project, and he is working with JPL on other Helium II cryogenic projects. At Klippings Institute I saw their work on Helium - Helium I (liquid and or gas) phase separators for use in space. From this work has come the design for a Helium II metering valve. I was also shown a non-metallic forced cooled cryostat and heat exchanger to be used in superconductor a.c. loss measurements by a Japanese group.

B. Cryogenic Pumping

My discussions with Dr. Buttner about cryopumping turned out to be very useful. He has done considerable experimental work on hydrogen cryopumps (in connection with the JET Project in England) he built a helium cooled cryopump which can pump either H_2 or D_2 onto a surfac at temperatures from 2.0 K to 5.0 K. The surface is a copper plate (pure copper and quite thick so as to reduce the thermal gradient) about 2,000 cm^2 in pumping area. The pumping surface is bounded by liquid nitrogen temperature shields. Conductance to the surface is through a liquid nitrogen temperature baffle which has a conductance of 25 percent (this is typical for 45 degree Chevrons). The pumping speed for room temperature hydrogen (measured in the pump by a couple of different methods) is just over 20,000 liters per second. The theoretical maximum pumping speed onto a cold surface for room temperature H_2 is about 44ℓ $S^{-1}cm^{-2}$. Since the active area of the pump is 2,000 cm^2 and the Chevron has an efficiency of about 25 percent, the sticking coefficient for the gas onto the cold surface is very close to one.

The pump is well built and well instrumented; the temperatures are measured using calibrated carbon resistors and vapor pressure bulbs. The temperature measurements are good to about 5 or 10 mk and temperature differences can be measured to 1 mk. They tried germanium resistors and silicon divides and felt they were not accurate or reliable enough. The pump is designed so that the copper plate can be changed from one with a polished surface to plates with various kinds of rough surfaces. Most of the data taken on the pump was taken using polished plates. Pump speed data has been taken using hydrogen, deuterium and mixtures of the two gasses. Tritium can't be used in their laboratory.

The pumping speed, speed of hydrogen was measured at various pressures onto the pumping plate. At 10^{-4} torr the measured pumping speed was about $11 \ell s^{-1} cm^{-2}$ (of plate area) the pumping speed went to zero for hydrogen at about 8 x 10^{-7} torr (the vapor pressure of hydrogen at 4.2 K). The pumping speed for pure deuterium stayed constant over the entire range of pressure from 10^{-7} to 10^{-4} torr. The pumping speed measured in the pump was $8\ 0 \ell s^{-1}$ cm^{-2} (of plate area). Since the baffle is 25 percent efficient, this corresponds to a sticking coefficient of 1 and a bare plate pumping speed of $32 \ell s^{-1} cm^{-2}$. Mixtures of H_2 and D_2 (for example 1 part of H_2 and 5 parts D_2) exhibit much lower pumping speeds than either hydrogen alone or deuterium alone. It is thought that there could be some molecular interaction between H_2 and D_2 molecules during condensation. It is clear that more data is needed at various condensing temperatures and at various mixture ratios.

The Klipping group has a cute fast accurate way of measuring pumping speed. The method is well suited to automatic recording and it does not require accurate pressure measurements and calibration factors for each gas or mixture of gasses. The accuracy of the time constant or dynamic pumping speed methods, they use, depends only on the linearity between the pressure guage signal and the true pressure. The method uses the exponential pressure drop with time when the valve letting gas into the pump chamber is closed;

$$P(t) = P_E \exp(-St/V)$$

where P_E is the equilibrium pressure during gas inlet, S in the pumping Speed, V is the Volume of the vacuum chamber, t is Time and P(t) is the Pressure (actually the pressure signal from the pressure gage) as a function of time since the gas flow has been interrupted. The only piece of mechanical hardware needed is a fast closing valve to sheet off the gas flow into the chamber. The signal P(t) is put through a logarithmic amplifier and is sampled at Time t_0 and t_1. The sampled signals are put through a differential amplifier and scaling is applied. The pumping speed can be read directly. The formula for calculating S is as follows:

$$S = -\frac{[\ln P(t_1) - \ln P(t_0)]}{t_1 - t_0} V$$

The fast sampling pump speed measurements are good to about 5 percent.

In addition to fast sampling of the pumping speed, the Klipping group has found a fast way to measure the accumulation of gas molecules on the pumping surface. First optical inferometry was tried, this failed because the frosts of hydrogen are opaque to light. Finally they devised a method where the capacitance change is measured in a net type capacitor. Hydrogen has a dielectric constant of 1.3 (vacuum has a dielectric constant of 1 as a comparison). The copper pump plate forms one plate of a capacitor. A nickle plated copper mesh located some 0.2 mm from the plate forms the other capacitor plate. The change in capacity as hydrogen is deposited permits accurate measurements of accumulations down to layer thickness of say

2×10^{19} molecules per square centimeter. This method is fast and it can be done with electronic sampling techniques at short intervals. Measurements of the stability of frosts on the cold surface show that there is not a sudden release of gas from the surface when radiant energy is put onto the surface. Hydrogen may be redistributed on the plate surface but the overall increase in pressure in the pump is related to the change in average plate temperature. Sublimation effects between the outside rim of the plate and the inner part of the plate could be seen. Again, there were some peculiar effects when Hydrogen - Deuterium mixture was tried. It is hoped there will be more understanding of the mixture phenomena by the time the current series of tests are completed in September of 1980.

Dr. Buttner and I discussed bare surface (no baffle of any kind) such as could be applied to neutral beam injectors. The important consideration is limiting radiation from the ends of the tube and the reduction of the number of energetic particles from the beam. This may require baffles which reduce the pumping speed of the cryogenic surface somewhat in order to reduce the energetic particle evidence. The concept of combining a superconducting magnetic shield with the cryogenic shield (as suggested in a paper by Jack Tanabe and I) sounded interesting to him. The general comment was that JET and other groups are doing a lot of copying of designs which don't work well, but they are doing little basic thinking on the subject. For example, the JET project adopted the TFTR neutral beam injector and cryopump design. It was Buttner's opinion and mine that this is perhaps a serious mistake. Dr. W. Obert at JET apparently has little knowledge of the problems or the cost incurred at LBL on the TFTR project. I talked to Dr. Obert at ICEC-8 and his comment was that the TFTR design was the only one that was proven and that he was compelled to use it. This sounds very much like a Project Manager talking who has very little technical knowledge of the problems in a project. (Dr. Obert indicated that this has been dictated from above). I suggest that LBL get involved in the development of combined neutral beam injector cryopumps and magnetic shields so that we will have a proven integrated design which can be adopted for the next round of neutral beam injectors. In the mean time the Klipping Institute may become involved in the basic problem of providing adequate baffling (which doesn't cut down pumping speed too much) for neutral beams with energetic particles.

Buttner and I talked about water adsorption and water desorption in vacuum of various organic and inorganic materials. The TPC magnet vacuum will sit at 2×10^{-2} torr for many days. It has been suggested that water desorption may be the cause of this (the reason for thinking this way is that TPC magnet vacuum drops from 2×10^{-2} torr to 2×10^{-4} torr as soon as the liquid nitrogen shield gets cold. The cold liquid nitrogen shield is a cryopump to water). The culprit may be our bridal veil netting which is most likely made from nylon. Buttner did some experiments some years ago on water adsorption and desorption from various organic materials, nylon was particularly bad because water is adsorbed clear down to the center of the fiber. Mylar and polyester are not so bad because with them water adsorption is only a surface effect. Perhaps some experimental work on various wetting and filler materials (dacron, glass cloth like a net etc.) should be tried to find a bridal veil netting which doesn't outgas too much.

C. Helium II - Helium I Phase Separation

The Klipping group did considerable experimental work before they determined that a porous plug was NOT a suitable phase separator for Helium II and Helium I. This is apparently particularly true for space application. The klipping group is building the Helium II, 1.4 to 1.8 K, cryogenic system for the GIRL infrared telescope, Dr. U. Schotte and her colleague H. D. Denner developed the theory for phase separation of Helium II from Helium I by the means of narrow channels. This method not only permits phase separation but it can also be a method for controlling the flow of Helium II in a flow circuit.

The mechanism for Helium II - Helium I phase separation. If helium is in a narrow channel (say < 15 μm), the flow of Helium I will be governed by the pressure drop along the channel. The flow of Helium II is governed by pressure drop along the channel and the so called fountain effect. As helium flows along the channel its pressure is reduced and by the J-T mechanism, the temperature decreases. Helium II fountain effect dictates that Helium II will flow from cold to warm temperatures along a surface. If the channel length and channel thickness is chosen correctly for a given pressure drop (usually 4 to 8 torr), complete phase separation can be obtained. If the channel length is too short or the pressure drop is to high, Helium II will flow out of the system at a controlled rate. Dr. Klipping showed me three valves and heat exchangers built by his group. Controlled Helium II mass flows as high as 60 mgs^{-1} of Helium II have been achieved using the largest of his control valves. The Klipping group method is an interesting one because it may be possible to control larger mass flows of Helium II in accelerator systems.

D. Other Things in the Klipping Laboratory

Klipping Institute is involved with a collaboration with a Japanese group which is measuring superconductor AC loss (by electronic means) in rapidly varying magnetic fields. Klippings group has built a non-metallic cryostat for the Japanese experiment which permits samples of superconductor to be cooled to 4.2 K by means of forced flow. The experiment includes an intricate heat exchanger entirely made of glass and plastic. The heat exchanger work but it's heat transfer coefficient is very much limited by the plastic wall separating the two streams.

Klipping Lab has the usual bunch of cryogenic equipment including a CTi Model 1400 liquifier with over 20,000 hours on it. This machine runs day and night filling a 500 and 1,000 liter dewars. Transfers are made from the large dewars to 50 and 100 liter dewars. The Klipping group supplies all of the liquid helium for the free university of Berlin. The machine is reliable and still makes 18 liters per hour when it is clean up and overhauled.

VISIT TO SULZER BROTHERS IN WINTERTHUR, SWITZERLAND - 14 JULY 1980

My visit to Sulzer Brothers on 14 July 1980 was to discuss the operation and problems with the gas bearing helium turbines used on the LBL 1500 W refrigerator. I met with Dr. Han H. Quack and Cris Blazer of Sulzer in an eleventh floor conference room of Winterthur's only real high rise office building.

I am using a question and answer format in order that Sulzer may have a chance to respond in writing. This makes sure that I have written down the correct facts. In most cases the questions were asked of Sulzer directly but, a few of the questions resulted from discussion which came from the answering of other questions. Sulzer and Helix (CTi) will receive a copy of this report so that they can confirm or deny the answers given here.

I first asked the questions which Phillip Eberhard had relayed to me by telephone. The questions and their answers were as follows:

Question #1. Does Sulzer have a spare turbine that they could send LBL at a moments notice?

Answer #1. No. Sulzer may or may not have a turbine which is of the right size and blade configuration at any given time. Sulzer makes seven different diameter wheels (an eighth is under development) and each wheel diameter may have different blade configurations. All in all, Sulzer probably has made 20 to 30 different gas bearing turbines. Sulzer can arrange to have a spare turbine on hand but, these arrangements should be made through Helix. I preseume there is money connected to this arrangement. Sulzer will relay an answer about having a spare turbine on hand to Helix (CTi) who will inform LBL of the terms and conditions.

Question #2. What is the spring constant of the radial and thrust gas bearings?

Answer #2. It is difficult to characterize the bearing spring constant. The spring constant of the thrust bearing is highly non-linear. The bearing force is inversely proportional to the square or the cube of the distance between the moving and stationary part. The bearing spring constant is proportional to the speed of the turbine wheel. Sulzer has not characterized the spring constant of either the thrust or the radial bearing on their gas bearing. (They apparently have on their oil bearing turbines.) To paraphrase Dr. Quack "We don't have a satisfactory explanation of exactly how our gas bearing works", the radial or journal bearings are more complex than the thrust bearing so the spring constant may be difficult to characterize here. In any event, I didn't get a satisfactory answer to this question.

Question #3. How much clearance is in the bearing?

Answer #3. About plus or minus 25 micro meters in the journal bearing which is 22 mm in diameter and about 20-25 mm long. If you look at the enclosed drawing you see two radial bearings, one on either side of the speed sensor. The distance between the two bearings is 20-25 mm. (I assume the 25 micron clearance is split between shaft and pad and the pad and housing. Note each radial bearing has 3 pads which move with the shaft. There is clearance between pad and shaft.) I didn't get a clear answer to the question of clearance on the thrust bearing. This can either be measured by LBL by moving the turbine in and out (my suggestion not Sulzer's) or perhaps Sulzer will answer this question in response to reading this report.

Question #4. What is the off balance moment for turbine failure due to wobbling?

Answer #4. The maximum allowable in balance moment for the turbine and compressor is 0.03 g cm. More will be said about this when I discuss failure modes later.

Question #5. Under what conditions did the turbine stop when there was up to four percent nitrogen in the gas stream? (As reported earlier in this foreign travel report).

Answer #5. According to H. Quack the turbine failed because nitrogen collected on the turbine blades stopping the turbine. The stoppage was not due to a clogging of the upstream filter. The two turbines in this Japanese machine (as in most Sulzer machines and the CTi Sulzer standard units such as the model 2800) have the two turbines in series in the gas stream. Stoppage of one turbine due to contamination did not stop the second turbine. In other words, there was gas flow through the stopped turbine because the other turbine was still running. A clogged filter (there is a 5 micron filter upstream from each turbine) would have stopped both turbines. The turbine nozzles do not clog as a rule, only the upstream filter gets clogged according to Quack and Blazer.

Question #6. Could the slowdown and stoppage of the number two turbine (J-T turbine) at Fermi Lab be due to neon freezing in the turbine nozzle. (I told Sulzer that the problem was cleared up when the turbine was warmed up.)

Answer #6. Sulzer was unaware of any problem with the number two turbine at Fermi Lab. The kind of failure described sounds like clogging of the filter ahead of the turbine with particles of neon hydrogen or perhaps other gasses. Since the filter is finer than the nozzle the frozen gas should collect there. One can see this condition by monitoring the pressure drop across the filter. An increase of pressure drop indicates an increase in contamination build up in the filter. (The filter is designed to filter out particles larger than 5 microns.)

I asked a few questions of Sulzer myself. The questions and answers to the questions are given as follows: (Note that some of the answers given result from general discussion about the Sulzer turbines. The question and answer format is designed to give Sulzer and CTi maximum opportunity to correct any misinformation that may be contained herein.)

Question #7. Is there any danger to the turbines when cold gas from a magnet quench is flashed through the refrigeration through the return circuit.

Answer #7. In the LBL system, there should be no harm done to the number two turbine because it will produce more liquid in the J-T circuit. There should be no harm done to the number one turbine provided the turbine circuit has the automatic throttling circuit. When the number one turbine gets too cold, the inlet pressure to the turbine should be throttled downward. The number one turbine has the following design points. As a refrigerator: (The LBL machine always operates as a refrigerator). The inlet pressure to the turbine should be no higher than 15 atm while the inlet temperature is at 21 K. In the liquifaction mode the turbine inlet pressure should be less than 20 atm while the inlet temperature is at 28 K. When the inlet temperature of the number one turbine drops below 21 K the inlet pressure must be dropped below 15 atm. See Figure 2 for safe operating limits for the number one turbine. The number two turbine pressure is not affected like the number one turbine but it is a good idea to drop its inlet pressure too.

The biggest danger of a sudden surge of cold gas in the heat exchanger is the freezing and thawing of liquid nitrogen in its heat exchanger. The liquid nitrogen circuit should be shut off during quenches. SIN at Villangen has an automatic circuit which flushes the liquid nitrogen circuit out with gasseous helium. The other question is; can the compressor take the increased inlet pressure without damage to itself or its motor.

Question #8. Has there been Sulzer gas bearing turbine failures at other places besides the United States on the CTi Sulzer machines.

Answer #8. Yes, there have been six to eight turbine failures at CERN during the commissioning phase of the machines in the North area. The failure scrubbed the thrust bearings because there were too large, too fast pressure changes across the turbine. The problem was remedied by controlling the rate at which turbines are shutdown with slowly closing valves. There apparently have been numerous instances where the plants have had turbines fail (but not catistrophically) due to impurities. In one instance in Japan (Question #5) the turbine itself clogged. In most other cases turbines stopped because the upstream filter was clogged. There are instances of this in Japan and at SIN in Villingen. (Perhaps other places as well). When I am at CERN I will try to get more details on the CERN failures.

Question #9. What might be the cause of pitting in the blades of the LBL turbine. Is it water ice, air ice, or something else?

Answer #9. Many plants have had a small grained white powder in them which is due to flux from the manufacture of the plate in heat exchangers. Incorrect cleaning procedures are the cause of the powder being in the plant. In some cases, grains of this powder have been found downstream of the turbine. The particle diameter is less than 5 microns so it went through the filter. This is a possible cause for turbine blade errosion. The white powder has been found in heat exchangers made by Trane, Steward Warner, and Marsten. No one seems to be immune from it according to H. Quack.

Question #10. What is different from the U.S. plants and plants made by Sulzer?

Answer #10. The LBL 1500 W plant, the Fermi Lab 1500 W plant, and the Oak Ridge plant operate their turbines in a different way from all of the Sulzer built plants and other CTi Sulzer plants. In the LBL, Fermi Lab, and Oak Ridge plants, the two turbines are run in parallel. The feed in the gas at 15 to 20 atm and operate at a pressure ratio of 5. The other plants have the two turbines in series. The first turbine has an inlet pressure of 14-15 atm but its pressure ratio is about 2. The second turbine has an inlet pressure of 7 to 7.5 atm but its pressure ratio is about 5. (See Figure 3 which compares the cases.) Sulzer feels that the thrust bearings are required to take higher forces as a result of operating at high pressures and high pressure ratios. They feel that this, perhaps makes these turbines more sensitive to failure.

H. Quack tried to explan how the turbine is supported by the various thrust bearings (magnetic and gas). When the turbine is perfectly balanced the forces in the axial direction of the turbine and compressor should balance each other. (This doesn't happen in practice.) In other word, F_T should equal F_C and F_R. (The resultant force to be carried by the thrust bearings) should be zero. Figure 4 shows schematically the direction of the forces. If F_T and F_C are of magnitude 2 and F_R should be of magnitude -1 to +1. The force exerted by the magnetic bearing F_M is small (about 0.2) for the magnetic bearing is designed to carry only gravity loading in the turbine during startup. The possible resultant force F_R is proportional to speed. When one operates the turbine at too high an inlet pressure and pressure ratio, the swings in F_R during operation become more extreme. For that reason, Sulzer feels that the LBL and Fermi Lab turbines could be more prone to failure.

H. Quack pointed out that when the turbine is warm the thrust bearing force F_R is pointed upward (toward the compressor end). As the turbine cools down, the resultant force changes to the downward direction (toward the turbine end). This could be an explanation of why the LBL turbine failed as it cooled down. If the lower thrust bearing was damaged during the previous shut down, start up warm would show no failure until the direction of the resultant force changed so that the damaged bearing is carrying the force. This is a more likely scenario for the last LBL turbine failure than the explanation of contamination (see Question #11). H. Quack pointed out that most catistrophic turbine failures are caused by a scrubbing of the thrust bearings rather than the radial bearings. Unfortunately, this is hard to see after the fact since both bearings are damaged.

Question #11. What about contamination and dirt on the turbine blades; can this cause turbine failure?

Answer #11. Yes, dirt and ice on the blades can cause turbine failure but not necessarily catistrophic failure. It is theoretically possible for dirt on the turbine to cause failure through some kind of wobble mode. The instance where the turbine was stopped by contamination (see Question #5) didn't result in wobble mode failure. One of the Japanese turbines lost half of one blade. It did not fail even though one half of one of seven blades had come off (see Figure 5). This put between 0.005 to 0.01 g cm of eccentricity into the system (these are my calculations based on LBL turbine dimensions). The Japanese detected they had problems with that turbine by the change in sound the turbine made as it spun at full speed.

Wobble mode failure does not appear to be a common mode of failure for these turbines, but Sulzer had not done testing to see exactly how a turbine does fail when there is contamination present. Hence, there is an explanation for H. Quack's statement that suggests 80 ppm air shouldn't cause turbine failure.

Question #12. Can LBL detect contamination or dirt buildup on the turbine blades? If so, what is the technique?

Answer #12. Yes, one can detect contamination buildup on the blades by mesuring the pressure difference between the outlet of the turbine and the outlet of the compressor. If the turbine is clean this pressure difference should be minimum. As the turbine gets dirty, the pressure difference should increase. (H. Quack pointed out that this kind of measurement is only valid at constant temperature and speed.)

Question #13. What about the 270 micron eccentricity and subsequent turbine rubbing which caused the second LBL turbine failure?

Answer #13. Chris Blazer was surprised at the kind of eccentricities we measured (see Figure 1). The tube which supports the turbine wheel housing is relatively thick walled and short in length therefore, he was surprised by the kind of movements we saw. He asked if the female part which the turbine wheel slips into is loose with respect to the tube. (It could also be that our turbine is different from the one shown in Figure 1.)

Question #14. What is the therodynamic efficiency of the Sulzer gas bearing turbine?

Answer #14. In process cycles the efficiency is set at 68 percent of isentropic. The actual turbines test out at 70 to 71 percent of isentropic.

Question #15. What can LBL do operationally to reduce the risk of turbine failure?

Answer #15. For safe operation, get rid of the contaminents. Contamination does plug up turbines and possibly can cause other kinds of failures. For safe operation the following operational procedure should be used:

1) Use both turbines;
2) Reduce the inlet pressure in both turbines (maximum is 15 atm);
3) Keep the turbine speed high; and
4) Make sure that the pressure at the inlet of the number one turbine is reduced further as the temperature at the inlet is reduced (see Figure 2).

In addition, Sulzer asked LBL to monitor the following data on its turbines during start up: 1) turbine inlet pressure; 2) turbine exit presure; and 3) turbine speed. Sulzer would like to see this data. They suggest we send this data to them after our next start up. They would like LBL to take this data from the start of start up until the refrigerator reaches equilibrium.

Sulzer would also like to see the speed and pressure data for the turbine in the first 10 to 20 seconds after a stop is initiated. This would give Sulzer information on the kinds of thrust bearing forces seen by the turbine.

I spent my time at Sulzer talking to two individuals. H. Quack and C. Blazer. I also talked to N. Eber over lunch and met G. Hablutzel. I apparently chose a bad time to visit Sulzer because Armin Sens and other experts on turbines were not there. I think that Sulzer did the best job they could in answering my questions but, I saw no hardware.

Sulzer is very concerned about proprietary information. I saw one turbine drawing (a cross-section) but, they refused to give me a copy of what I saw. I asked to see hardware. Yes, they could show me a turbine shaft with a compressor on it which is not very interesting. When I asked to see a bearing assembly they said that was proprietary. They seal their bearing because they don't want people copying them. I asked for photos, I was again refused even though there are photos floating around.

I am not sure I buy Quack's statement about not knowing how the bearings work. I am sure there is at least some theory which covers it. I will give H. Quack the benefit of the doubt because I don't think he is the real expert at Sulzer.

As to the bearing clearances and spring constants, perhaps Part I will jog their memory enough to get more information. They had a hard time coming up with bearing clearances as it was. I was not given clearance data on the thrust bearing at all. The Sulzer people may well be right when they way that spring constants are hard to characterize. As it is, I don't fully understand the radial journal bearings. These bearings have four moving parts, the shaft and the three pads which pump the helium. There are two bearings at least 20 mm apart hence, the shaft is well supported against moments.

In terms of contamination, this seems to be a widespread problem. Sulzer claims it doesn't cause catistrophic failure (it theoretically can, but doesn't). I shall talk to the people at CERN and at SIN to find out more. I am more convinced now that contamination was <u>not</u> the cause of our last turbine failure, but I don't know what was either.

Sulzer has had more gas bearing turbines fail than is generally believed. Their machines in Europe particularly those at CERN have had some failures. There are a lot of Sulzer machines which have not had much time on them. (I contrast this to a CTi 1400 I saw at the Free University of Berlin which has over 25,000 hours of continuous operation.) On the other hand there is one Sulzer gas bearing machine at SIN which has over 48,000 hours on it. It has been suggested that I go see it.

When Sulzer builds a machine or turbines for a new CTi machine, they always build a spare turbine which is kept on hand during the warranty period. I asked what happens after the warranty period. I was told that the customer is offered the spare turbine at some price. If the turbine is refused, it is taken apart and the parts are used. In other words, a spare LBL turbine did exist at some time.

Sulzer refuses to discuss service or money. All such discussions have to go through Helix. H. Quack tried to convince me of how this is to our advantage. Helix may be the biggest fly in the ointment, but clearly Sulzer has not helped by their claiming proprietary data on anything connected with the gas bearings.

There are now two gas bearing turbine suppliers in the free world; Sulzer and Air Liquid of France. It would be very smart if the Department of Energy and perhaps the Department of Defense pay for the reserach to bring one or more U.S. manufacturers into the gas bearing turbine business. There are a number of firms capable of doing such work including Rotoflow in Los Angeles (a distinct advantage to LBL, LLL, LASL and SLAC). There are a number of turbine consultants around who can design the blades and perhaps the bearings. What it takes is money and a commitment on the part of the U.S. government. Perhaps if a little less paperwork was required all around, there would be enought money to fund such a program.

Cryogenic turboexpander
Self-acting gas bearing system

Figure 1

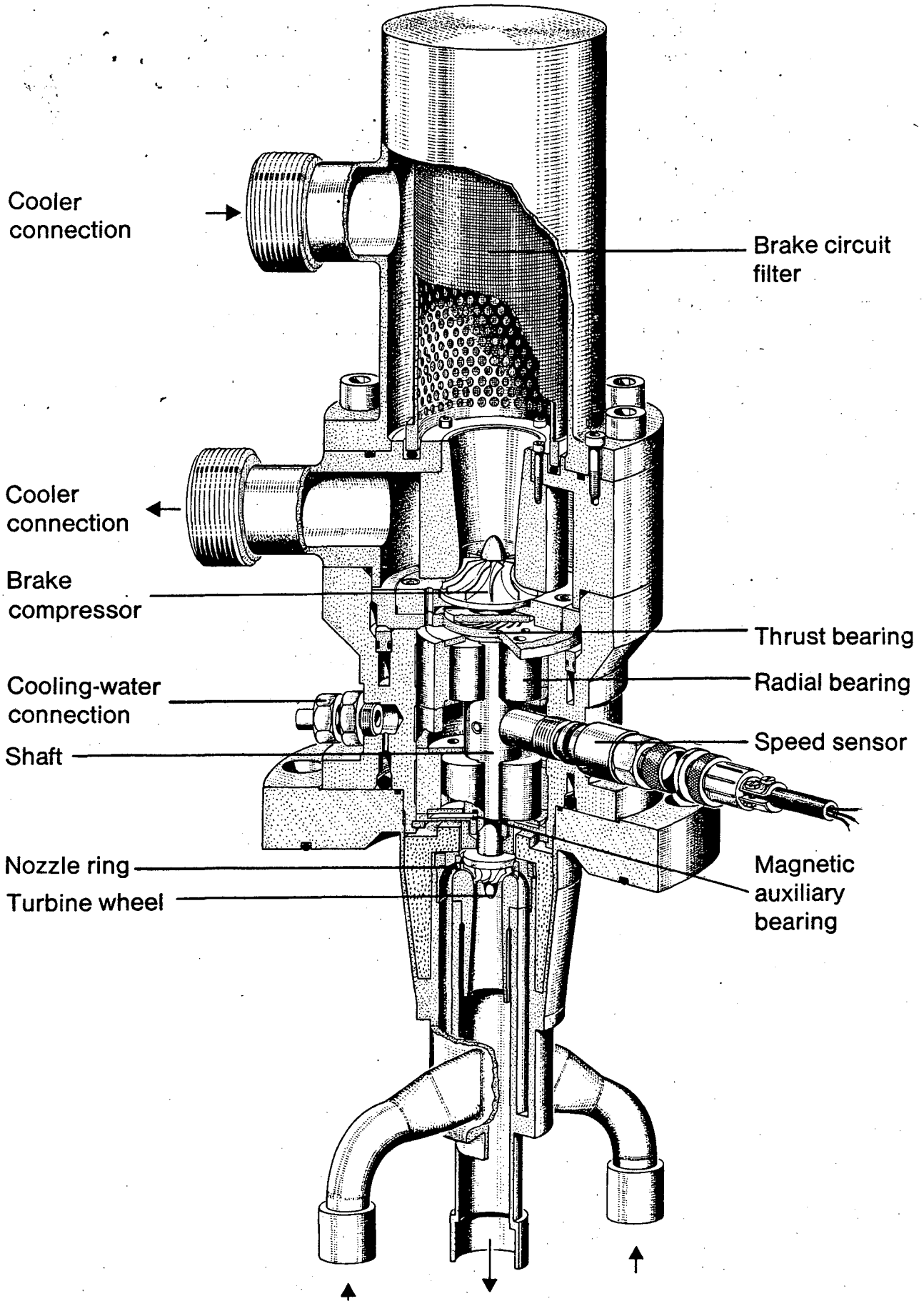

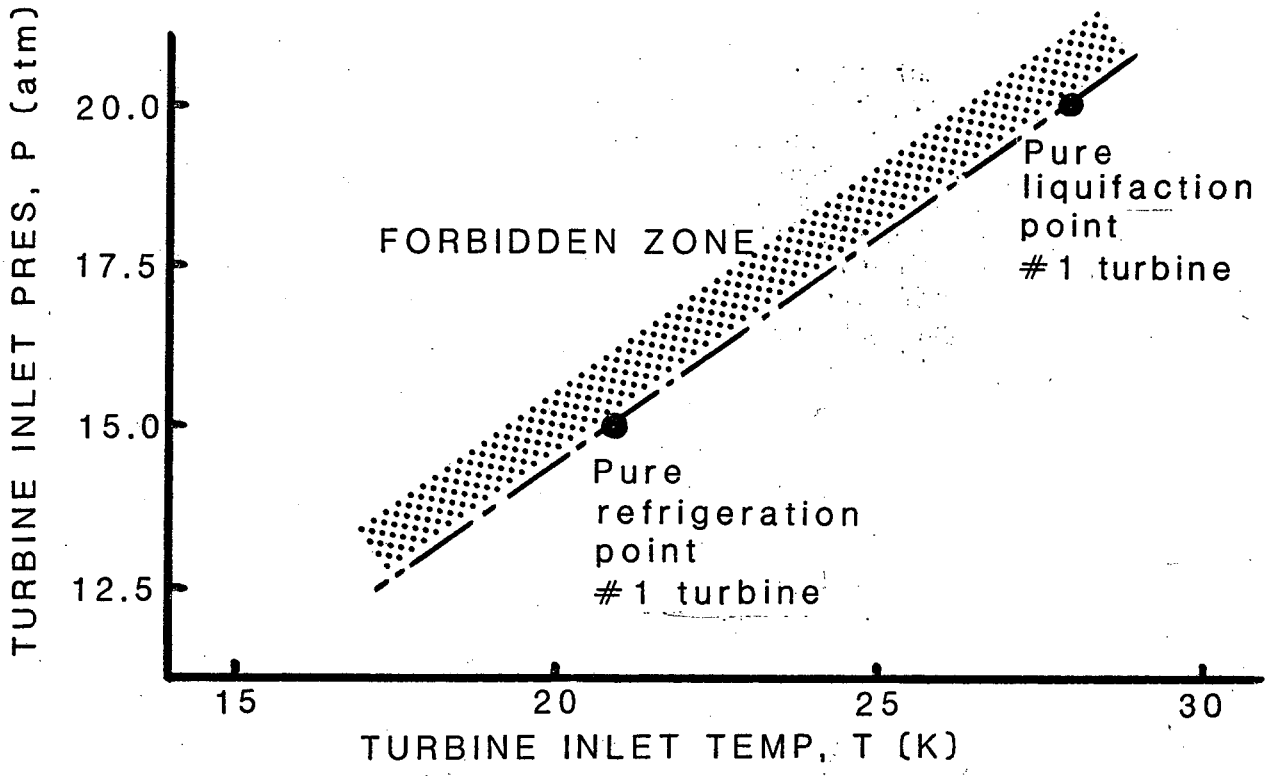

Figure 2 Number 1 turbine inlet temperature and pressure for the LBL and Fermi Lab 1500 watt machines

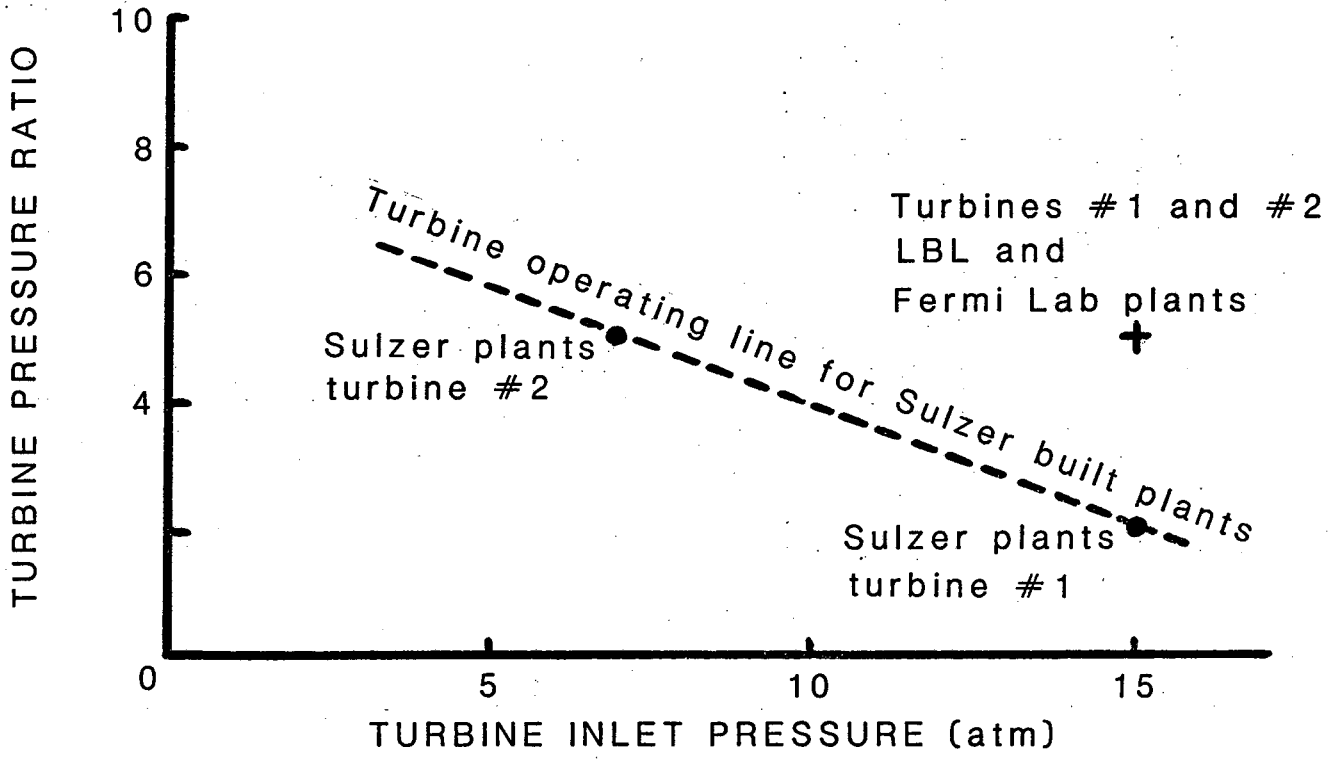

Figure 3 Turbine inlet pressure vs turbine pressure ratio for Sulzer gas bearing turbines in various plants

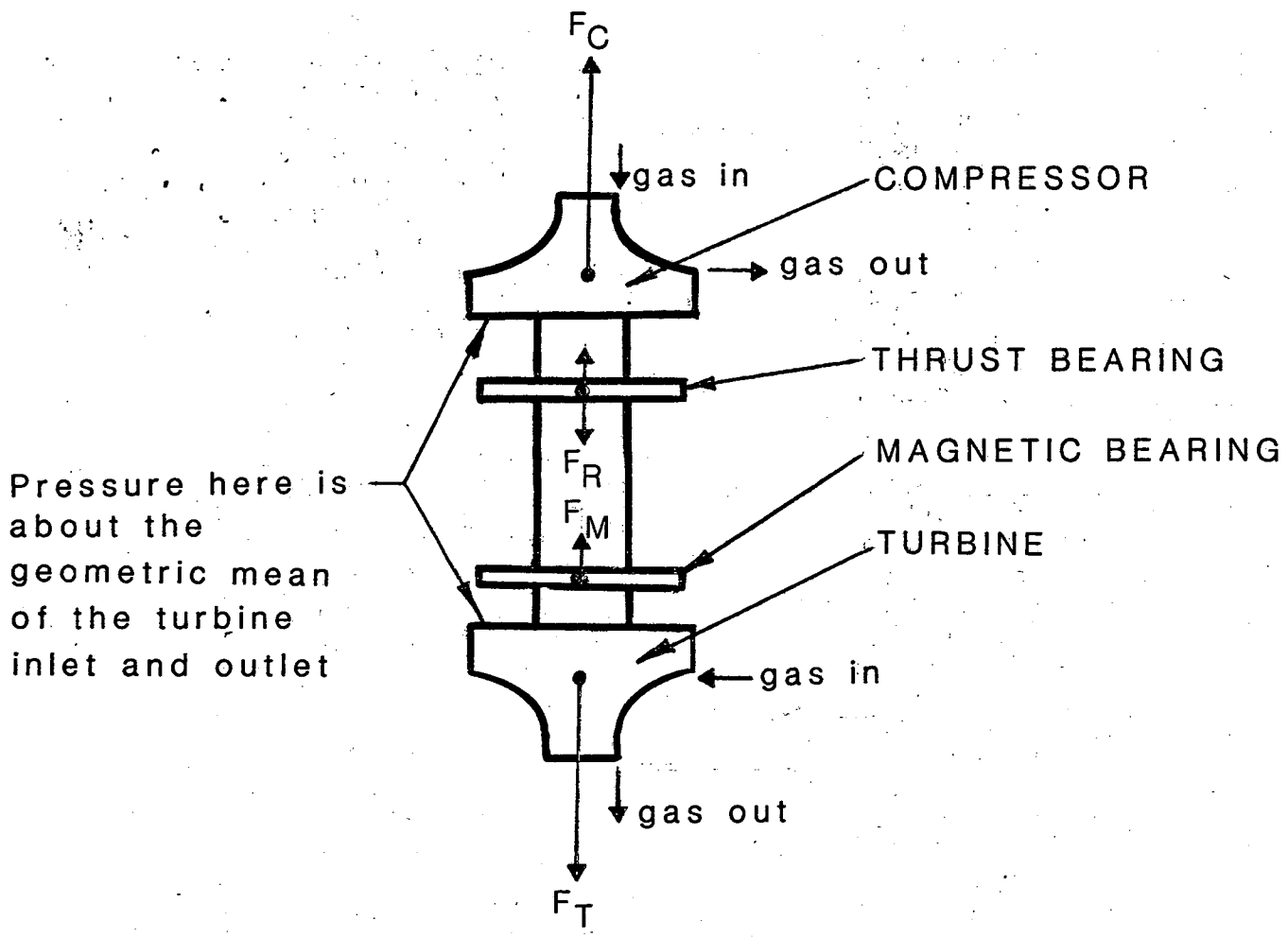

GENERAL CONDITION

$$F_C + F_T + F_M + F_R = 0$$

where

$F_T \approx 2$ (arbitrary units)

$F_C \approx 2$ (arbitrary units)

F_R between -1 and -1 (arbitrary units)

$F_M \approx 0.2$

Figure 4 Approximate thrust force diagram for the Sulzer gas bearing turbine and compressor assembly

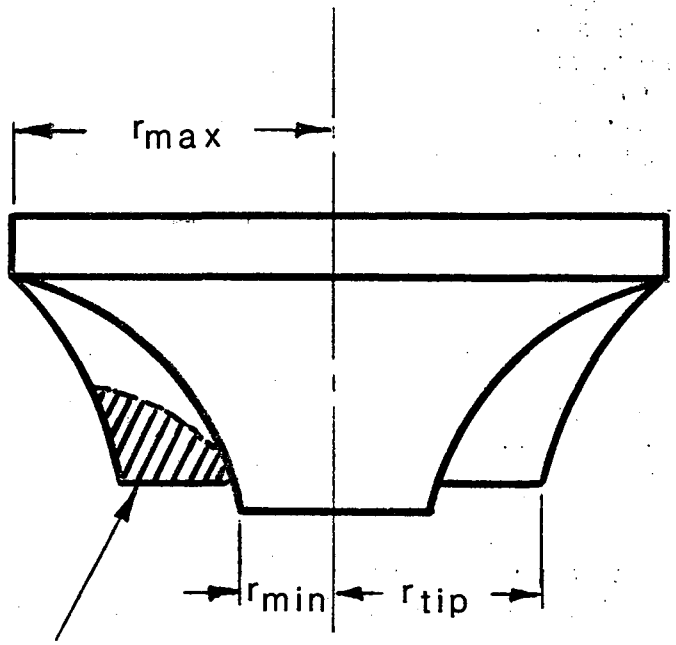

This portion of one blade was broken off the Japanese turbine

ON LBL TURBINE:

$r_{min} \approx 3mm$

$r_{tip} \approx 7mm$

$max \approx 10mm$

BLADE THICKNESS $\approx 0.4mm$

BLADE MATERIAL IS ALUMINUM

$\rho = 2.7\ gm/cm^3$

Figure 5 Approximate blade breakage mode for the Japanese turbine (dimensions apply for LBL turbine so that an equivilent eccentricity can be calculated)

International Cryogenic Materials Conference Non-Metallic Materials at Low Temperature II
August 4-5, 1980, CERN Geneva, Switzerland

This is a small topical conference sponsored by the International Cryogenic Materials Conference Board and arranged by the Karlsruhe Nuclear Research Center (Kernforschungszentrum) Institute fur Technische Physik and the National Bureau of Standards, Boulder, Colorado. This conference is the second in a series of conferences which started in Munich in 1978. Like the last conference, this conference is a small conference with no parallel sessions. This conference dealt with the following aspects of nonmetallic materials at cryogenic temperatures:

1. High polymers at low temperatures.
2. Mechanical and Electrical properties of high polymers.
3. Mechanical and thermal properties of composite structures.
4. Cryogenic applications of nonmetallic materials.
5. A panel discussion on industrial processes and what is needed to produce large nonmetallic structures for use at cryogenic temperature.

I presented a short paper during the cryogenic applications session in the afternoon of August 5th.

The morning session on August 4, 1980 was devoted to High Polymers. The first two papers dealt with the specific heat and thermal conductivity of polymers. At very low temperature polymeric materials do not follow the laws expected of them (i.e., glass below 1°K the specific heat goes down with T. It should follow a T^3 relationship). It is believed that a two level tunneling process is responsible for the change from normal behavior.

Crystallinity of the polymer has a strong effect on the specific heat and the thermal conductivity. D. Greig of UNI, Leeds, England showed that at temperatures above 25K, the thermal conductivity goes up as the crystallinity of the polymer increases. Below 25K quite the opposite happens. For 100 percent amorphous structures the thermal conductivity plateaus between 20K and 1K. (Below 1°K the thermal conductivity drops off with a T^2 relationship.) As the structure becomes more crystallinic, the thermal conductivity drops. A 100 percent crystallinic structure has a thermal conductivity which falls with a T^2 dependence until the temperature reaches about 2°K where the relationship becomes a T dependence. Behavior of polymers between 2 and 25K are explained by an acoustic mismatch theory. (The sound velocity in the crystal is different from the surrounding amorphous mass.) The change in behavior at 2°K is explained by the fact the phonon wave length in such a structure is long compared to initial parameter lengths such as crystal dimensions.

The morning session was capped by two very practical-minded papers given by E. A. Erez of MIT and D. Evans of the Rutherford Laboratory. E.A. Erez' paper dealt with the structural integrity of thermal insulators under cyclical stress and irradiation. The materials tested were various sheets of NEMA-G10 between sheets of 304 stainless steel. The thickness of the plastic and

steel sheets were much less than width dimension. The sheets were tested to failure in compression. The NEMA-G10 failed at higher stresses than observed in the LBL experiment with samples of NEMA-G10 alone. The presence of the stainless steel apparently enhanced the performance of the plastic. The stack was stronger at 77°K than at room temperature.

At room temperature, the fatigue tests showed the following results. At 2 x $10^8 Nm^{-2}$ the sample stayed together through over 200000 cycles. At 3.45 x $10^8 Nm^{-2}$ the sample failed after 450 cycles. The materials survived for over 10000 cycles even when they were irradiated with 10^{10} rad of radiation. The test stress in this test was 3.1 x $10^8 Nm^{-2}$. Radiation had a small effect on the fatigue performance, but it was not as bad as initially expected. E. A. Erez pointed out that the E glass samples had 10 times the residual radiation of the S glass samples after irradiation. This residual radiation, which in all cases was very low level, caused considerable political problems within the lab.

David Evans of the Rutherford Laboratory talked about years of testing of epoxy resins. He talked about the simple test used to measure thermal shock resistance of a whole host of resins. This test is basically the following. The resin is cast and cured with a stainless steel bolt in it. The cast resin sample is then dipped in liquid nitrogen 10 to 15 times. Those samples which survive this test are said to have good thermal shock resistance. The samples which showed good thermal shock resistance were selected for more detailed tests of mechanical properties at both room temperature and cryogenic temperature. In the shock resistance test, the addition of flexibilities and additive did not, in general, improve the thermal shock resistance. The really hard epoxies can be quite good for thermal shock resistance. (An explanation for this is as follows: The flexible epoxies have a low modulus at or near room temperature, but they also have a larger total contraction coefficient. Hard epoxies are stronger with a lower total thermal contraction coefficiency. Many perform very well.)

D. Evans points out, and rightly so, that epoxies are not to be selected on the basis of thermal shock resistance alone. Other criteria come into play, for example, the pouring viscosity, pot life, gel conditions, and the cure cycle. For example, for vacuum impregnation one needs an epoxy which gets into small cracks yet will have a reasonable pot life. D. Evans and his colleagues came up with a very simple test for measuring the pourability of epoxy resins. The test sample consists of an S shaped glass tube which is filled on one side of the S with very fine ballontini glass beads. The tube is evacuated and sealed. The open end of the S unfilled with ballontini is dipped in the resin in question. The tube and resin are kept at the pour temperature. Then the seal bead on the tube is nipped off (while under resin) so that the resin can flow into the tube. The epoxy with the best pourability will extend furthest into the ballontini before it sets up and stops moving. Using a test of this nature one can look at many samples of resin.

The most interesting papers of the conference dealt with composites of glass, kevlar and carbon fibers with various epoxy resins. W. N. Reynolds of the AERE Harwell, England talked about non-destructive testing of composite

materials. He talked about X-ray and ultrasonic methods for measuring void content. Voids are the biggest problem in composite structures. On the average for each 1 percent void fraction in the composite (Reynolds used glass fiber epoxy composites) there is a 7 percent decrease in interlaminer shear strength. The best method for measuring void content in many types of structures is to measure attenuation of ultrasound through the composite. (This method works very well for sheet material which is tested under water or some other fluid.) When the material is void free, the sound attenuation is about 3 Db per centimeter. At one percent voids this rises to about 4 Db per centimeter. (In most instances one wants to keep the void fraction below one percent.)

David Evans talked about the physical properties of resin glass fiber composites at low temperatures. He showed that some types of filled epoxy can have thermal contraction coefficient matching copper. Unfilled epoxys can have 3.5 (hard epoxy) to 6 times (semi-flexible rubber type epoxy) the thermal contraction of copper. Glass epoxy resins show varying thermal contractions depending on the glass content and the direction with respect to the fiber direction. There is as much as a factor of two difference (for 50 percent glass composites) depending whether you go along the fibers or across the fibers. As a result of this anisotropic behavior, failure in thick sections of epoxy glass structures cooled to cryogenic temperatures. (As an example Evans showed ring structures.) When the thickness of the ring exceeded 15 to 20 percent of the ring diameter, substantial cracking of the structure occurred during cooldown of such a structure. This cracking is blamed on the anisotropic behavior of these structures.

W. Weiss of Messerschmitt-Boelkow-Blohm of Ottobrunn, Germany gave an interesting talk on the mechanical and thermal properties of carbon fiber reinforced epoxies. In his experiments he used a semi-flexible resin CY221/HY979 with a high tensile strength fiber T300 and a high modulus fiber M40A. The epoxy was produced by Ciba-Geigy and the fibers by Torayca Company. At Ciba's suggestion a rigid resin LY556/HY917 was also tried. Many of the measurements were done at 77K as well as 293K. All of the samples were undirectional samples. Most of the measurements were made along fibers but some were made to the fiber direction.

The T300 high strength fiber exhibited strengths up to $2 \times 10^9 Nm^{-2}$ when stretched along the fiber at 77°K (at 293K the strength was $1.7 \times 10^9 Nm^{-2}$). Youngs modulus along the fiber direction were measured at values approaching $1.4 \times 10^{11} Nm^{-2}$ with the T300 fiber. Those along the fiber poisons ratio were about 0.31 to 0.34. Mechanical properties perpendicular to the fiber were small in comparison to those in the parallel direction (ie $E = 1.2 \times 10^{10} Nm^{-2}$ for fracture $4.2 \times 10^7 Nm^{-2}$ and = 0.012). In other words, the carbon fiber material is highly anisotropic just like glass and Kevlar composites are. This agrees with data reported elsewhere.

The conference permitted me to talk to industrial people as well as polymer chemists. I had some interesting discussions with Robert E. Randolph of Hercules, Incorporated, Magna, Utah; and R.L. Kolek, Westinghouse research center in Pittsbourgh, PA. From both of these people I found out about the possibilities of fabricating large-sized carbon fiber composites for use as cryogenic supports and superconducting magnet winding mandrels. For example,

a carbon fiber support structure might have been very attractive for the HISS project. If fabricated in the right way, a carbon fiber structure could have greater strength, almost equal modulus, and one-tenth the heat leak of a support structure made from stainless steel. I am sure that the carbon fiber structure is costly (somewhere around 40 to 50 dollars per pound) but HISS could have used such technology. One large-scale pressure vessel application uses a hundred of tons of carbon fiber composite at a price of 20 dollars per pound.

Visit to the ISR Division at CERN, afternoon of August 4th and August 6th

I visited the ISR Division at CERN and gave a seminar on August 4th in the afternoon. The seminar discussed the TPC magnet and the two phase cooling system for that magnet. My visit to the ISR Division was arranged by Tom Taylor who showed me the low insertion Beta quadrupoles, their refrigeration system, and the transfer lines. I had some discussions with A. Asner on construction of beam line dipoles for the CERN North area.

The low beta insert magnets are combined quadrupoles and sextupoles. There are four long magnets and four short magnets. All eight magnets are designed to deliver a quadrupole gradient of 43 Tm^{-1} within a warm bore of 173 mm diameter. The magnetic length of the short quadrupoles is 0.65m and the magnetic length of the long quadrupoles is 1.15m. At a design current of 1575 A, the peak induction in the windings is 5.3T. The critical current for the quadrupoles at 4.5T is 1800A and the peak field in the windings is around 5.9T. The sextupole windings, which are inside the quadrupole windings, are designed to give moderate sextupole gradients of as much as 25 Tm^{-2}. Both the sextupole and quadrupole coils have a block cos θ design not dissimilar to the ESCAR coils. The quadrupole and sextupole combination has cold iron which becomes saturated at a current somewhat below design value. Separate dodecapole correction windings take care of gradient error due to symetric effects such as saturation of the cold iron. The quadrupoles are designed to produce a good gradient to better than one part in one thousand.

The superconductor chosen for the quadrupoles is a monolithic conductor with a copper to superconductor ratio of 1.8 to 1. The bare conductor dimensions are 1.8 x 3.6 mm. The conductor, made by Vacuumschmelze in Germany, contains about 1400, 46 m diameter filaments of Nb-Ti. The conductor is insulated with enamel and polyamide tape. This conductor should carry 2000A at 6T and 4.2K.

An interesting feature in the CERN design is the fact that the CERN quadrupole windings, which are 38.5 mm thick, contain no liquid helium. CERN disagrees with the contention that helium must be in the windings in order to prevent training. (My discussions with A. Asner on the North area dipoles reflect this philosophy.) The CERN people told me that primary reasons for not having helium in the windings is that helium does not help prevent burnout during a quench nor does it contribute to the strength of the coil. The CERN philosophy is in direct disagreement with the dipole and accelerator

magnet development programs in the United States in terms of training. The CERN coils are wound under strong tension and each coil is vacuum impregnated with epoxy resin. The modulus of the CERN coils is quite high in both the radial and circumferential directions (the modulus is greater than 6 x $10^{10} Nm^{-2}$) as well as along the length of the coil.

The training behavior of the CERN quadrupoles is not as good as Fermi Lab is claiming for their magnets, but it is much better than any of the other U.S. dipoles. All eight quadrupoles trained to above design current in from 4 to 9 quenches. All of the magnets trained to near critical current (1800A) in from 6 to 18 quenches. (It should be noted that the CERN quadrupole coils were wound at Alsthom-Atlantique, Belfort, France; the cryostats were made by Leybold-Heraeus in Cologne, Germany and CERN did the assembly.) The CERN quadrupoles perform very well from a training standpoint. The firm Alsthom Atlantique guaranteed the magnet coils against failure during a quench for at least 5 quenches. (It should be noted that the design current is 87.5 percent of critical current along the load line.) The CERN magnets remember they have been trained. There is very little retraining needed (if any) after a warm up or after disassembly of the magnet. Training at 1.8K should work very well if the results of V. E. Keilin et al. are correct.

The good training behavior of the CERN magnets can be explained as follows:

1) The coils are rigid with a high modulus in all directions.
2) A monolithic conductor is used in the construction of the coils.
3) The coils have no support from the inside. The bore tube is not connected to the coil. They are supported and squeezed only from the outside.
4) The cold iron is split and slipped over the coils. Compression forces to the coils and iron are supplied by a thick aluminum shell which is shrunk over the cold iron. As the quadrupoles cool down, the coil is compressed by forces from the ring.
5) The epoxy is kept out of tension.

The CERN potted coil design does a good job of controlling overall strain. The potted monolithic conductor exhibits a minimum of strain concentration. The CERN design lends itself very well to indirect force two-phase cooling.

The CERN quadrupoles are both cooled in cryostats which have over all lengths of 1.18m for the short quadrupoles and 1.68m for the long quadrupoles. The design heat leak into the cryostats is 6.8 W for the short ones and 7.5 W for the long ones (including current leads). The actual cryostat heat leaks were within 30 percent of design value. The mean heat leak for all light cryostats is 61.8 W (plus lead gas flow if the system is run on a refrigerator) which is only 8 percent over design value.

The bath-cooled cryostats are connected to a Sulzer TCF-200 liquifier which produces 270 lh^{-1} in a 3000 liter storage tank. The liquid is transferred to the magnet through eight 50-meter long liquid helium transfer lines capable of transferring 100 liters per hour to the magnet cryostats. These same transfer lines are used for cooldown and warm up of the magnets. The transfer lines carry cold or liquid helium out to the magnets. Warmer boil-

off helium is transmitted back to shield the line. The lines are semi-flexible lines built by Kabelmetal in Hanover, Germany. The heat leak to the 50 m section of lines was measured at around 2.5 W when the shield gas was at a temperature of 100K. I saw these transfer lines; they are quite capable of being bent over a 1 meter radius.

The Sulzer TCF-200 plant has been tested without difficulty. There have not been enough hours put on the plant to determine whether the Sulzer turbines are trouble free. The CERN group told me about problems with their BOC plant. There were many turbine failures which were ultimately fixed by CERN. (The service provided by BOC was practically nonexistent.) I heard similar horror storys without details concerning air liquid turbines. CERN people admitted to me there were problems with commissioning the Sulzer North Area plants. The ISR plant had no such problems. The plant, which delivers 1000 W of refrigeration, has two turbines in series. (This is standard for Sulzer plants.) The plant looks like a heavy-duty industrial plant. The building which houses it is huge (three times larger than the building which houses our 1500 W refrigerator and its compressors). The compressor is a Sulzer piston labyrinth seal compressor, which is mounted on a heavy concrete pad in a building some distance from the cold box and the ISR.

My talks with A. Asner were brief. I had only enough time after the seminar to talk to him. I didn't see any of his hardware. He is building dipoles for beam lines in the North Area. The design is similar in concept to the CERN quadrupoles. There is no helium in the windings. These magnets are designed to run in strings so quench protection is very important. From what Asner and Taylor say, there is a consensus at CERN which says that dipoles and quadrupoles should be built with <u>no</u> helium in the windings. Morpurgo from what I am told agrees, but I have not talked to him directly about this subject. CERN plans to continue its dipole and quadrupole work with potted coils. (This could change, but it is true as of the summer of 1980.) Training at sub-cooled temperatures is of interest provided it is temperature not heat transfer which is responsible for better training at low temperature.

Visit to Brown Bovari Company Mannheim, W. Germany, August 25, 1980

I was invited to visit Brown Bovari Company (BBC) in Mannheim by Dr. Cord-Heinrich Dustman who I had known when he was at the Kernforschungszentrum, Karlsruhe. Brown Bovari was founded in Switzerland (for tax reasons) but it quickly opened a branch in Mannheim. The Mannheim plant is the largest of the BBC facilities (others are found in the United States and France). Dr. Dustman was involved in cryogenics and superconductivity at the Institute fur Technische Physik in Karlsruhe. He now is in charge of a new group at BBC, Mannheim.

As a company, BBC has had considerable experience in superconductivity. All of this experience has been, until recently, was in the plant in Zurich, Switzerland. The BBC plant in switzerland makes superconductor and has wound a number of large superconducting coils, all of which are forced cooled. BBC built the superconducting coils for the CERN, OMEGA spectrometer. They have built the muon channel coils for SIN in villingen, Switzerland. More recently BBC completed construction of the pion cancer theorpy toroidal magnet also at SIN in Villingen. BBC in Switzerland is also building one of the six LCT coils to be run at Oak Ridge.

BBC Mannheim is getting into the superconducting coil business in competition to the Siemans works in Erlangen and Nurnburg in Germany. The Mannheim plant is primarily in the business of building large steam turbines and stationary gas turbines for power stations. BBC Mannheim also builds large power station generators (The largest I saw was 800 MVA) and transformers. Since BBC Mannheim has considerable experience at coil winding, it is quite natural for them to be winding conventional magnet coils as well.

a) Gas turbine and steam turbine manufacturing

Anyone who is interested in energy or electrical energy generation should see a large gas turbine or large steam turbine under construction. The steam turbines I saw had shaft powers in the neighborhood of 800-1000 MW. The gas turbines under construction looked as if they were rated at shaft powers up to 400 MW or so. The shafts of the turbines were 50 centimeters in diameter on up. The mass of some of the shafts alone were up 30 metric tons.

The gas turbine eases and the shafts are made from 18-8 stainless steel. I asked if molybdenum or niobium was used in any of this steel. I was told that special high temperature steels were used only in the turbine blades themselves. Pieces of turbine cases made from 18-8 stainless steel were as large as 5 meters in diameter. The cases themselves were as much as an inch thick. The cases are cast then rough machined on huge planers. The rough cast surfaces were hand worked.

The gas turbine I looked at in detail was basically an axial flow device with 20 or 30 stages of blades on the rotor (the same number on the stator as well). The blades for the first four stages on the rotor are internally cooled. The blades themselves are holed so that cold gas can circulate from

the shaft through the blades by natural convection (The body force is centrifugal force instead of gravity.) All of the early stage blades appeared to be coated with some sort of refactory metal or metal carbide. I was not told what it was. Later stages were made from high temperature steels rich in molybdenum niobium and manganese. I was given no details about what these blades were made from.

The steam turbine blades were also cooled in the early stages. The blade here look like they contain liquid metal or some such coolent. On later stages the blades were specially hardened and coated with an abrasion resistant substance. Apparently this protects the blades from liquid water which condenses within the turbine during some modes of operation. The blades are not attached to the shaft in a rigid way. You can physically move the blades as much as one millimeter. The blades are mounted in a specially machined slot called a christmas tree slot. The blade ends also have a christmas tree shaped key on them. As the turbine spins up the blade lock into the correct position as the christmas trees lock. At the down stream end of the turbine the blade length approaches 30 centimeters. These blades are tied together with an elliptical bar (the minor axis is perpendicular to the flow through the turbine) which prevents certain vibration modes from occuring.

Perhaps the most interesting part of the turbine plant was the welding assembly for making the shafts. Large turbine shafts are hollow. BBC makes their shafts out of rings are made from stainless steel plates about 35 cm thick. The plates are welded together. The first weld on the inside of the shaft is a heliarc weld. The crack between the plates is 18-22 mm. A special powder welder was built so that welds could be made 18 mm wide in a crack which is as deep as 50 cm. The stainless steel is all preheated before the welding starts. Care is taken to avoid warpage during welding. After the turbine shaft is machined, it is difficult to see where the plate boundarys are. This method of shaft fabrication makes a shaft which is easy to balance.

b) Conventional electrical machinary plant

I went to the plants where large conventional generators are made. The rotors are nothing but large rotating dipole magnets. The three phase multipole winding are in the stator. I saw two sizes of generators 150 MVA and 800 MVA. There were others but they appeared to be used with water turbine plants. The rotor of a large generator is quite impressive. The rotor itself is machined steel with longitudinal slots in it. The 150 MVA rotor were about 0.6 meters in diameter with an active length of about 3 or 4 meters. The 800 MVA rotors are twice as long and about one meter in diameter.

The rotor coils are made from copper and are insulated with an epoxy mica cloth composite. The insulated rotor coils are installed into the rotor slot and then they are held in place by specially machined wedge keys. Each rotor coil has a separate set of custom made keys. Whenever a generator is brought in for rework, new keys must be made. There is apparently a lot of creep in the rotor coils after years of spinning at 1500 to 3000 RPM. BBC makes coils for both 50HZ and 60HZ operation. The rotor test, bed is almost 12 meters

long. This bed tests rotors for vibrations and various failure modes at speed up to 5150 RPM. Each rotor is individually spun into position and balanced. Needless to say, the whole process is quite impressive.

The stator contains the three phase windings which generate the power to be sent over the mains. A number of the large stators are water cooled. BBC has also built large water cooled rotor machines. I saw the test stand with all of it's pumps purifiers and filters for the water cooling system. The stator winding are all insulated with vacuum impregnated epoxy resin, mica and glass. Since these windings operate at 10-15 kV there is a conductive layer built into the coils which prevent charge build up and are over at some parts of the coils near corners. The stator coils are installed in rolls of stacked silicon steel laminations (1.8% silicon and 0.5 mm thick). Plastic wedges (it looks like NEMA G-10) press the coils into the laminations. The sections of the generator stator are installed in the frame. The process of hooking up the cooling and setting the wedges is done in the generator frame.

c) The conventional D coils for the JET torus and other conventional magnet work.

BBC is building the D shaped coils which produce a torridal field for the JET (Joint European Torus) tokamak in Culham. The dimensions are as follows: 1) the height of the D is 5.65 m; 2) the width of the D from the flat surface to the peak rounded portion of the D is 3.8 m; and 3) the coils have a variable cross-section. (the small section is the triangular section which forms the straight up and down portion of the D and the large cross section forms the rounded section of the D.) Each coil is water cooled. The straight up and down leg of the D is accurately cast to shape within 0.5 mm. There are 36 coils to be built. BBC had built 15 at the time I visited them.

The JET coils consist of a series of double pancakes of variable cross-section conductor with a water cooling holes. The sections of copper are machined, at the ends for brazing. A brazing foil is put between the two machined ends are pressed together. The joint is tested by stretching the joint in tension then X raying it. The stretching process opens up flaws which can be seen by the X ray machine. After brazing the conductor is sandblasted and solvent cleaned as it is fed to the winding machine. Each turn is insulated; each double pancake is insulated and each coil which consists of several double pancakes is insulated. The JET coils are vacuum impregnated in a mold which shapes the outer surface of the coil. BBC uses a proprietary epoxy poured by automatic machinary at a temperature of 80°C. The cure takes place at about 140°C.

The finished coils are beautiful as the come out of the mold. The mold insures that the coil do meet the necessary accuracy standards. The coils are lightly buffed then are painted with a final glaze coat of epoxy. The finished coils show no evidence of voids cracks or other imperfections. BBC apparently does understand epoxy impregnation. I saw a number of examples of very fine work. The final high voltage tests are not done until the coils have been dunked in water for 48 hours. (There is a special D shaped tank

which completely submerces the coils). The production line is now capable of producing one coil every two or three weeks. The cost for production of one of these coils (excluding development costs) is 300000 DM ($172000).

Dr. Dustmann showed me some conventional dipole magnet coils BBC mannheim is making for DESY. Apparently, some of the first coils built for PETRA are showing signs of radiation damage. So these coils are being replaced with coil which use a different epoxy formulation which they say, is ten times as resistant to radiation as the formulation used in the previous coils. The PETRA coils show very well the kind of workmanship BBC mannheim is capable of. According to my German friends at Karlsruhe, BBC is quite willing to build conventional magnet coil for accelerator application. Siemans apparently has not been very willing or very successful. I was told that BBC should become viable competition in the field of super conducting coils as well.

Visit to DESY in Hamburg, West Germany August 29, 1980

I visited DESY to see G. Horlitz and S. Wolff in order to discuss superconducting dipoles and quadrupoles for HERA, a superconducting proton storage ring which will convert PETRA into an electron-positon-protron colliding beam facility. During my visit I gave a short seminar on large, thin solenoid technology. Unfortunately, the seminar was ill-timed, because the TPC magnet failed two days earlier.

The primary subject of our discussions was the HERA project. DESY only has a small group to study magnets for the HERA project. As a result, DESY is receiving help from Siemans in Erlangen, W. Germany, Brown Bovari in Mannheim, W. Germany and CEN, Saclay near Paris, France. The Institute fur Technische Physik at Kernforschungszentrum, Karlsruhe participated in a design study to determine the best magnet design for HERA. This design study included participants from the other GESSS laboratories as well.

The design study recommends adopting a design similar to the Fermi Laboratory energy doubler saver design. Machines in Japan and the Soviet Union are on the verge of adopting a similar design. The HERA design study suggests a two layer dipole with an external collet. There is a great deal of reluctance in adopting other design concepts.

Horlitz, Wolff and I discussed how one can reduce training and yet increase the stiffness of the coil design. In general, the DESY group has rejected the approach used by CERN. The HERA group feels that the fully epoxy-impregnated magnet design CERN is using is subject to excessive training. Unfortunately, the design concept used at Fermi Laboratory is not stiff enough to provide a uniform enough field for the HERA storage ring. The groups at Saclay, Siemans and BBC are studying the problem in different ways.

1) Saclay is looking at ways of subdividing the coil so that each coil deflects individually. Errors in such a system are not cumulative.

2) Siemans has essentially adopted the Fermi Laboratory's design suggested by DESY. Their efforts are aimed at making the coils as stiff as possible yet they will maintain the open coil structure characteristic of the Fermi type design.

3) BBC has not adopted the suggested DESY design. The BBC group is proposing a stiff fully-impregnated coil system which is compressed in cold iron or in a collet system. BBC is leaning toward the CERN approach even though the HERA study group rejected that approach.

Institute fur Technische Physik, Kerforshungszentrum, Karlsruhe various times during the summer of 1980.

I spent a total of nine weeks at the Institute fur Technische Physik (ITP) at Kernforschungszentrum, Karlsruhe (KFK). I was a consultant to ITP on various matters concerning magnetic field modeling and cryogenic system cooldown modeling. During my stay at the KFK I gave three lectures on various aspects of superconductivity and the construction of high current density magnets. The exact dates I was at the Kernforschungszentrum is given in the first section of this report. The KFK paid for the travel and the expenses during my stay at Karlsruhe.

The Institute fur Technische Physiks is the leading large superconducting magnet group funded by the German Federal government. The Institute, headed by W. Heinz and Komereck, has specialized in large superconducting fusion coils, high current superconducting switches, high field superconducting coils, forced flow cryogenic systems and other areas in superconducting magnet technology. ITP also has programs in fundamental superconducting materials research and in the field of composite nonmetallic materials. The nonmetallic composite materials group is one of the major research groups in this field in world. (The US has done almost no research in nonmetallic composite materials since the NASA funded efforts of the late 1960's.)

a) Discussions with Dr. Hung the head of cryogenics in the Peoples Republic of China.

Dr Hung gave a lecture on cryogenics in China during his short visit to the KFK. I had the oportunity to talk to him for about 30 minutes. The lecture he gave at the ITP Seminar covered much of the material given in his paper at ICEC-8 in Genova.

Dr Hung was involved in liquid helium production in China from the very beginning. The first Chinese liquid helium became available in 1959. The first liquifiers use liquid hydrogen as a precooler. The first expansion engines did not operate until 1964. Lose fitting pistons were used because the technology for tight fitting pistons was difficult in China at that time. They built 10 of these lose fitting piston machines with a capacity of 20 liter per hour. Chinese industry is currently producing 10 and 50 liter per hour machines. (The 50 liter per hour machines can be boosted to 70 liters per hour.) There are about 20 of these Chinese machines running. In addition, there are 2 BOC machines and one Lindi machine. Chinese helium comes from natural gas in central China. Helium also comes from air separation plants built in earlier times (before the discovery of natural gas).

The Chinese are working on turbine expanders for their space simulation chambers. They are about to produce their first 100ℓ h^{-1} machine using gas bearing turbines. Gas bearing turbines are a problem. (The Turbines being developed are about 1.8 kW.) The Chinese are building a double acting piston machine with regenerators. Chinese liquid helium dewars come in 100 and 300 liter sizes.

Dr. Hung talked about the type of dewars the Chinese are making. Their industry supplies storage dewars in 100 liter and 300 liter sizes. The dewars have vapor cooled shields and aluminum foil type of super insulation. The Chinese are using rhodium-iron thermal couples, germanium resistors and carbon resistors as temperature measurement probes. My impression was that all were Chinese made.

Dr. Hung talked about some Chinese work on magnetic separation. They feel that the use of superconducting magnet will permit magnetic separation in a fluid outside of the magnet bore. The Chinese have tried experiments where diamond, magnetic fluid, and manganese nitrate are separated. Experiments were also tried using diamond quartz when the diamond size was less than 1 mm in size. The magnetic separation project is one of several superconducting magnet applications talked about.

b) Ten thousand Ampere gas cooled leads.

Karlsruhe's interest in large superconducting coils has resulted in the development of high current leads. H. Katheter described the 10000 A gas cooled lead built and tested at the ITP. The leads are made from good copper. (RRR at 4°K is greater than 50.) The leads are about 6.5 cm in diameter. They consist of machined copper in a stainless steel can. The copper is machined line a screw with threads of opposite pitch. The groves are machined in a 6.3 cm diameter copper piece about 2 meters long. The machined slots are 6 mm wide and about 15 mm deep. The grooves in one direction are 12 mm apart. The grooves in the other direction are 16 mm apart. This gives the machined copper a rather weird appearance.

When the Karlsruhe leads were tested, they were found to be quite efficient. The heat leak down the leads is about 2.0 W per 1000A. The gas flow through the leads are about 0.1 gs^{1} (2.86ℓ h^{-1}) per 1000 amps pair. The efficiency is comparable to commercially available leads. The lead has a current density of 1250 A cm^{-2} in the 3.2 cm diameter central copper section. The extra copper in the fins enhances the lead heat transfer and it becomes a heat sink for heat generated in the lead by the current in the event the gas through the leads is cut off. The Karlsruhe lead will run at least a half an hour without gas flow.

The Karlsruhe leads are easy to build. They are more complicated than they need be. The heat transfer per unit copper volume (in the central section) is rather low. A comparison of the KFK 10000A leads with the TPC 2300 A leads show the following:

1) The Karlsruhe leads are 300 cm long. The TPC leads are 55 cm long. The overall efficiency of the two types of leads is comparable.

2) The heat transfer per unit current carring copper area is about twenty times lower in the Karlsruhe leads as compared to the TPC leads.

3) Both leads operate at a current density of 1250 A cm^{-2} in the current carrying area.

4) Both leads can operate without gas for a half hour. The Karlsruhe lead are somewhat cooler.

5) Both leads can operate on pressurized gas circuits.

It is clear that simple high current leads can be built for large magnets. The 10000 A lead built at Karlsruhe will be used for the Euratom superconducting coil for the large coil project at Oakridge.

c) The Tespe project.

Dr. K. P. Jungst showed me a number of the Tespe coils that were under construction each of the Tespe coils consists of four double pancakes. The pancakes are separated by fiberglass disks which should permit liquid helium to flow in and around the conductors.

The Tespe project has been plagued with difficulties. The cable apparently has had a number of stability problems. The conductor is wound under considerable tension. It is hoped that this will solve some of the problems of conductor stability. Each of the six Tespe coils is to be canned in a stainless steel can. The metal become brittle in the weld zone. The welds had little ductility and were prone to vacuum leakage. After sixteen months of study, it is hoped that a suitable welding filler material has been found.

d) Heltex and the LCT cooldown model coil.

Dr. Jungst showed me the Helitex facility which has been used to produce supercritical helium for use in the LCT test coils. The Helitex facility is an impressive "control dewar". The tank diameter is over 2.6 m; the height of the facility is about 3.5m. The facility has an impressive array of stainless steel valves, flexible transfer lines for nitrogen and rigid lines which connect to the Karlsruhe refrigerators.

The Helitex facility has been used to test several types of helium pumps. Two commercial pumps were tested and found wanting. A reliable helium pump is needed for the LCT project coil. Dr. G. Krafft showed me the pieces of a piston pump with teflon rings. The pump, which is under development, is supposed to pump over 100 gs^{-1} at pressures of 10 to 15 atm with a differential pressure of up to atu. The construction and testing of the new pump is expected to be complete by the spring of 1981.

During the spring and summer of 1980 Dr. G. Krafft and his group tested a 100 kg cooldown model of the LCT coil. The Helitex facility was used to supply the helium to the LCT cooldown model. The model itself is a circular coil one LCT conductor wide (42 mm) surrounded by a stainless steel case (about 20 mm thick). The coil inside diameter is 1.4m; the coil outside diameter is 1.83 m. The overall size of the package

including the case is about 2 m on the outside and about 1.25 m on the inside. The case has a mass of 710 kg; the 19 turns of LCT conductor and insulation was a mass of 290 kg. The coil can be cooled either through the conductor (a hollow forced flow conductor) or through tubes welded to the stainless steel case. The conductor cooling circuit is about 100 m long. The case cooling circuit is about 10 m long.

Using a short section of LCT conductor Krafft measured the friction factor. At Reynold numbers of 1000 the measured friction (fanning friction factor) is about 0.16. By the time the Reynolds number reaches 5000 the friction factor has dropped to 0.065. At Reynolds numbers above 30000 the friction factor levels off at about 0.04. The smooth pipe approximation does not apply to the LCT conductor, but it can be safely used on the case tube.

When the LCT model was cooled using helium flow in the case only, cooldown was achieved in about 35 hours. Through most of the cooldown, the mass flow through the tube was between 4 and 5 grams per second. The temperature differential between the entering helium and the winding was kept below 50K° through most of the cooldown. Karsruhe did not attempt to shock cool the LCT model using helium at a temperature of say 100 K as a cooling medium.

When the LCT model was cooled down using only flow through the 100 m of conductor, the cooldown took of the order 75 hours. The helium mass flow through the conductor was about 1 gram per second for the first 60 hours. Between 50 and 70 hours from the start of the cooldown, the mass flow rose to 2.5 grams per second. The maximum temperature differential between the entering and exit fluid was about 60K. The temperature differential to the conductor itself was as high as 80K. Again the temperature of the entering fluid was controlled so that it went down as the conductor cooled. There was no attempt to shock cool the LCT model through the conductor.

The cooldown test of the LCT model shows that the Euraton LCT coil can be cooled down in a controlled way. Krafft remarked that cooling the case is the most effective way of cooling down the LCT. Smaller temperature differentials result and the cooldown is faster. There appears there is little likelihood of excessive thermal stress developing in the coil.

e) The construction of the TOSCA facility.

During the summer I watched the new ITP lab building and the LCT test hole be built. The construction consists of a large high-bay building with heavy cranes and a 10 meter diameter concrete lined hole which is about 12 meters deep. There is at least 15 meters of crane clearance over the hole.

Construction of the steel frame of the high-bay structure was delayed somewhat by six weeks of almost continuous rainfall which occurred from June 15th to the first of August. This rainfall converted the hole to a huge swimming pool covered with float debris and scum. August was hot and clear so construction proceeded at a rapid clip. By the 7th of September, the framming for the building was up, cranes were installed and the roof was in place. The outer skin was being built.

f) Discussions with P. Turowski on the Karlsruhe Hybrid Magnet.

Dr. P. Turowski and his group have been working for some time on bath cooled coils which could be used in a 30 Tesla hybrid magnet facility at Grenoble. The test program included the construction of a small wind and react bronze process NNb_3Sn multifilament solenoid. Turowski's group has been studying the limits of cryostability in some rather high stored energy coils. During the summer of 1980 Turowski's group was building a 63 cm long, 40 cm ID and 72 cm OD solenoid magent system.

Turowski built a small wind and react Nb_3Sn solenoid using Vacuumschmelze conductor. The performance of the magnet was entirely satisfactory. There was no training or degradation when the magnet was tested. Turowski found the conductor quite touchy to handle. A piece of conductor, which was reacted with the magnet, was quite brittle.

The major problem that Turowski faces with his magnets is that they approach 1.2×10^8 A m $^{-2}$ current density in the conductor. In most of the coils he has built, normal regions will propagate even when the conductor is well cooled. The copper matrix resistance is greatly increased by magneto-resistance in the copper. As a result, the magnets may quench and burn even though much of the coil is cryostable. The Turowski group has successfully tested ultra-pure aluminum strap wound into the coil with the superconductor. The low magneto-resistance of ultra-pure aluminum made the coil cryostable at 8 or 10 tesla at current densities above 10^8 A m^{-2}.

The large coil system, which was under contruction, will consist of four coils. The inner coils have an ID of 400 mm and an OD of 501 mm. The length of each coil is 300 mm. The two inner coils, separated by 30 mm of stainless steel and insulator are each wound with 602 turns of rectangular conductor with dimensions of 3.1 x 6.7 mm. At the design current of 1100 the current density in these coils is 5.8×10^7 A m $^{-2}$. The outer coils have an ID of 519 mm and an OD of 719 mm. These coils are also 300 mm long and they are separated by 30 mm of stainless steel and insulator. The conductor for the outer coils (which also carries 1100A) is 2.0 x 5.85 mm. At design current this conductor operates at a current density of 9.4×10^7 A m^2. At design current (at 4.2K) the four coils should produce 8 tesla. At 1.8K, the coils should produce 10 Tesla. It is hoped that the enhanced heat transfer in superfluid helium will increase the stability enough to permit safe operation at 1375A.

Each of the four coils is wound from a continuous length of conductor. In order to get a continuous length, joints in the conductor are cold welded. The conductor has a copper-to-superconductor ratio of 4, and it is an 800 filament conductor. The cold welding technique produces a joint with a low resistance. The joints themselves are quite low in resistance (less than 10^8 ohms) and seem to be very reliable. The joints are strong. The unannealed joints were good for at least 5100N (in the small conductor), while the annealed joints are good for at least 3100N. (The joints are elastic up to the limits given above.) The strain in all cases was around 0.1 percent for stress levels approaching 1.5×10^8N m^{-2}.

APPENDIX

This appendix consists of a biographical listing of the papers and reports brought home from Europe.

Papers and booklets from ICEC-8 Conference, Genova, Italy.

- ICEC-8 Program and Abstracts.
- List of Conference participents.
- A special issue of cryogenic pertaining to ICEC-8.
- The proceedings of the 8th International Cryogenic Engingeer Conference, IPC Press, Guildford, England 1980.
- V. E. Keilin, I. A. Koualev, S. L. Kruglov and D B. Pavin (Kurchatov Atomic Energy Institute, Moscow, USSR). "Experiment on Stabilization of Superconductors in Pressurized Superfluid Helium." The abstract for this paper is published in the ICEC-8 conference proceedings. The paper itself was not published I got a copy from V. E. Keilin. This paper is important because it disputes the theory that improved heat transfer is the cause of improved magnet training in pressurized Helium II.

Papers and booklets from the International conference on experimentation at LEP, Uppsala, Sweden.

- Conference Programme.
- Abstract catalogue.
- Proceeding from the International Conference on Experimentation at LEP, published in Physcia Scripta, Vol 23, No 4:1 and No 4:2 (1981).
- B. Naroska, "The Jade Detector at PETRA."
- H. Drumm and 15 other authors from Heidelburg University, DESY, Rutherford and Hamburg University, "Experience with the Jade Jet-Chamber at PETRA and Pattern recognition programs for the Jade Jet-Chamber" DESY 80/38, May 1980.
- M. J. Corden and 24 other authors from University of Birmingham, Queen Mary College and Rutherford Lab., "Performance of a UA1 Hadron Colorimeter Protopype."
- M. J. Corden and 24 other authors from University of Birmingham, Queen Mary College and Rutherford Lab., "Some Hadron Calorimeter Properties Relevant to Storage Rings."
- W. A. Wenzel, "The PEP-4 (TPC) Facility a Status Report."

- S. Stone of Cornell University, "Early Operating Experience with the CLEO detector."

Papers from the Fritz Haber Institute are included in the ICEC-8 Conference Proceedings.

Papers from my visit to Sulzer, Winterthur, Switzerland.

- Sulzer Cryogenic's Bulletin No. 4, June 1980.

- N. Eber, "Worldwide Cryogenics, Switzerland Cryogenics at Sulzer," Cryogenics, April 1980.

Papers from the International Conference on Cryogenic Materials, Geneva, Switzerland, Aug. 4-5, 1980.

- Program for the ICMC Nonmetallic Materials Conference.

- List of participants at the ICMC Conference.

- W. Weiss (Messevschmitt - Boelkon, Ottobrunn, Germany) "Low Temperature Properties of Carbon Fiber Reinfoced Epoxies."

- D. Evans and J. T. Morgan (Rutherford, Appleton Labs.) Chilton-Endcot, England) "Physical Properties of Epoxied Resin Glass Fiber Composits at Low Temperatures."

- K. Dahlerup-Petersen and A. Perrot (CERN, Geneva, Switzerland) "Properties of Organic Composite Materials at Cryogenic Temperatures," CERN ISP-BOM/79-39 (Nov. 1979).

- E. A. Erez and H. Becker (MIT Plasma Fusion Center, Cambridge, MA, USA) "Radiation Damage in thin Sheet Fiberglass Insulators."

Papers acquired during my visit to the CERN ISR Division.

- J. Billan et al., "The Eight Superconducting Quadrupoles for the ISR High-Luminosity Insertion," CERN ISR-BOM-GE/80-22 (July 1980).

- L. Laeger, P. Lebrun and P. Rohmig, "Eight Liquid Helium Cryostats for the Superconducting Magnets of the ISR High Luminosity Insertion, " CERN ISR-BOM/80-10 (June 1980).

- H. Blessing, et al., "Four Hundred Meters of Flexible Cryogenic Helium Transfer Lines," CERN ISR-BOM/80-9 (June 1980).

- T. M. Taylor, "The Choice of Spectrometer Magnets for LEP," CERN ISR-BOM/80-33 (June 1980).

- Assembly Drawings of the CERN ISR Low Beta Insert Quadrupoles.

Papers acquired during my visit to BBC in Mannheim.

- J. Zellwegner. C. Vescay and J. Horvath, "The Superconducting Mecical Facility at SIN."

- H. Benz, et al., "World Wide Cryogenics Switzerland Cryogenics at BBC," Cryogenics, August 1979.

- H. Fillunger and I. Horvath, "Superconducting Coils for the Mum Channel System at the Swiss Institute for Nuclear Research," BBC paper.

- N. Schaetti, "Superconductor for the Magnet Coils of the 'Omega' Spark Chamber at CERN," BBC Publications CH-IM-311-420E.

- G. Meyer, "Supraleitende Kabel fur Magnets Pulen," BBC publication CH-IM-311-3601.

- K. Kwasnita, "Losses in Filament Superconductors in Magnetic Fields Varying with time," BBC Publication CH-IM-311-780E.

Papers obtained during my visit to DESY, Hamburg, Germany.

- E. Baynham, K. P. Jungst, J. Perot (the GESS Laboratories) "Superconducting Proton Ring for PETRA." (April 1979).

- Report of the Electron-Proton Working Group of ECFA, Part V, the Superconducting Magnet System for HERA.

Papers which were obtained at the Institute fur Techinische, Physik, Kernforshungszentrum, Karlsruhe, Germany.

- Abstract for a paper by G. Pasztor and C. Schmidt, "Microstructure Dependence and Origin of Local Energy Release in BCC Technical Superconductors during Strain."

- G. Pasztor, "Verhalten von Kubisch - Raumzentierten Technischen Supreleitern Vnter Dynamischer Mechanischer Belastung," KfK 2879, (Okf 1979).

- J. Hukener, "Auswahl Kriterien von Pumpe Zur Forderung von Flussigen Helium."
- J. Hukener, "Untersuchung on von Pumpemsystemen fur den Einsatzbei Flussigen Helium."
- G. Krafft, H. J. Spiegel, G. Zahn, "New Pressure Transducers for Low Temperature application" (April 1980).
- Technische Liefer und Abnahmekedingungen fur Spulentestanlage TOSKA, Project LCT" TLA-119/80, Katheder, Mai 1980.
- A set of drawings of the TOSKA cryogenic facility at ITP, KfK.
- "Ergekniskericht uker Forschungs und Entwichlungsarbeiten 1978 des Instituts fur Technische Physik," Kernforschungszentrum, Karlsruhe KfK 2755.
- Excerts from the above report translated to English.
- "Ergebnisbericht uber forschungs und Entwichlungsarbeiten 1979 des Instituts fur Technische Physik," Kernforschungszentrum, Karlsruhe KfK 2933.
- "Kurzbericht uber Forchung and Entwicklung 1979," Kernforschungszentrum, Karlsruhe.

/nh

This report was done with support from the Department of Energy. Any conclusions or opinions expressed in this report represent solely those of the author(s) and not necessarily those of The Regents of the University of California, the Lawrence Berkeley Laboratory or the Department of Energy.

Reference to a company or product name does not imply approval or recommendation of the product by the University of California or the U.S. Department of Energy to the exclusion of others that may be suitable.

TECHNICAL INFORMATION DEPARTMENT
LAWRENCE BERKELEY LABORATORY
UNIVERSITY OF CALIFORNIA
BERKELEY, CALIFORNIA 94720