UC-38
LBID-492 c.1

Lawrence Berkeley Laboratory
UNIVERSITY OF CALIFORNIA

Engineering & Technical Services Division

RECEIVED
LAWRENCE
BERKELEY LABORATORY

AUG 31 1982

LIBRARY AND
DOCUMENTS SECTION

For Reference

Not to be taken from this room

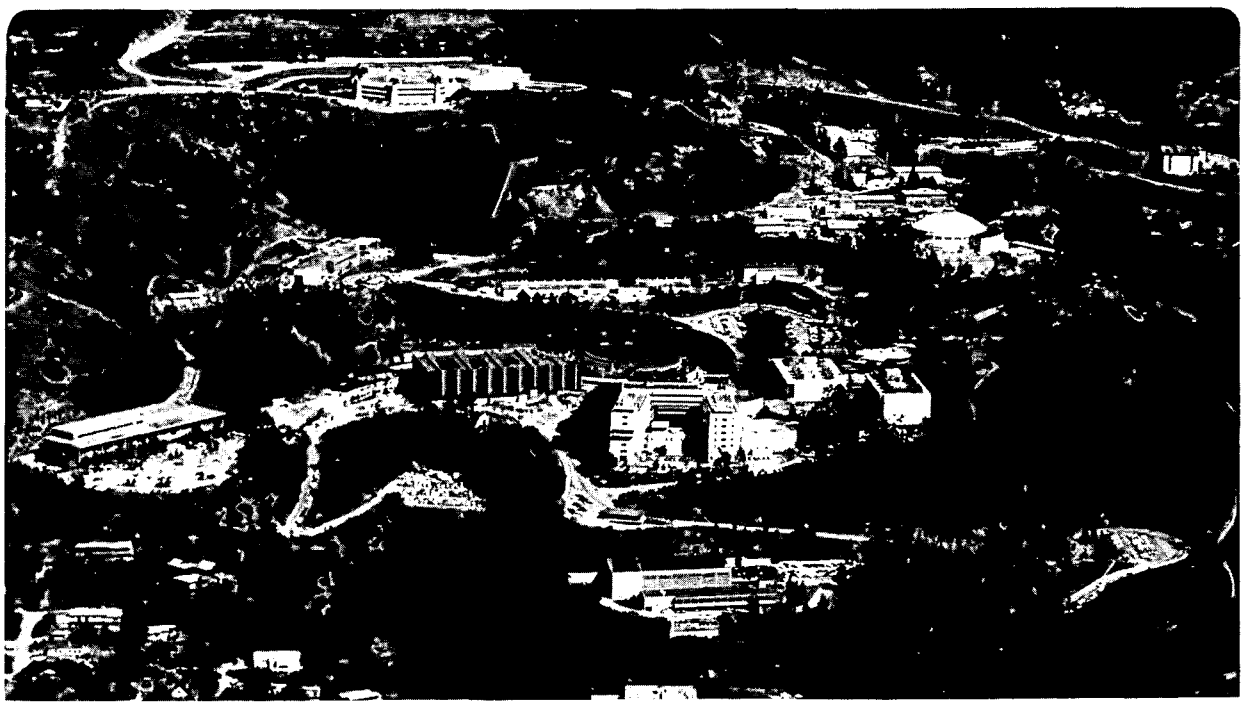

LBID-492 c.1

DISCLAIMER

This document was prepared as an account of work sponsored by the United States Government. While this document is believed to contain correct information, neither the United States Government nor any agency thereof, nor the Regents of the University of California, nor any of their employees, makes any warranty, express or implied, or assumes any legal responsibility for the accuracy, completeness, or usefulness of any information, apparatus, product, or process disclosed, or represents that its use would not infringe privately owned rights. Reference herein to any specific commercial product, process, or service by its trade name, trademark, manufacturer, or otherwise, does not necessarily constitute or imply its endorsement, recommendation, or favoring by the United States Government or any agency thereof, or the Regents of the University of California. The views and opinions of authors expressed herein do not necessarily state or reflect those of the United States Government or any agency thereof or the Regents of the University of California.

SUBJECT: PEP Transport Bend Magnets 22B3000 Magnetic Measurements (41B11 and 42B11)

NAME: Donald H. Nelson

DATE: March 15, 1982

INTRODUCTION

In July, 1979, we tested magnet fields of two PEP injection magnets designated 22B3000 (41B11 and 42B11).[1] This report documents these tests.

TESTS CONDUCTED

In the main gap, on the pole-piece center line, we determined the integral of magnetic induction as a function of transductor potential ($\int B_x dy$ vs $E_{xductor}$).*

Measurements were made at selected points on locii of two minor hysteresis loops. The low-current** end points of both minor hysteresis loops is I = 0 (i.e., $E_{xductor}$ = 0; power supply off). The high-current values were selected to approximate the settings which produce integrals of magnetic induction capable of bending 15 GeV and 20 GeV particles respectively through an angle of 0.0417 radians in the vertical plane.

In the "stored-beam" region, we determined separately the integrals of the "horizontal" (x') and "vertical" (z') components of magnetic induction integrals (i.e., $\int B_{x'} dy'$ and $\int B_{z'} dy'$). See Figure 9 for primed coordinate system.

TEST EQUIPMENT AND MEASUREMENT PROCEDURE

The test equipment for these tests was identical to the test equipment used for measuring the B-10 magnets (32B2600) as reported in Engineering Note MT 281.[3] Figure 1 and Table I from that report are reproduced for the reader's convenience.

At selected values of transductor potential, the integral of magnetic induction over each half of each magnet was measured by flipping the integral coil 180° about

*The main gap coordinate system is shown in Figure 8.

**Magnet current (I) is very nearly 100 x transductor potential ($E_{xductor}$). See Engineering Note MT 301[2] for a discussion of measurements on "minor hysteresis loops".

RL-398 7600-54257 (Rev. 9/73)

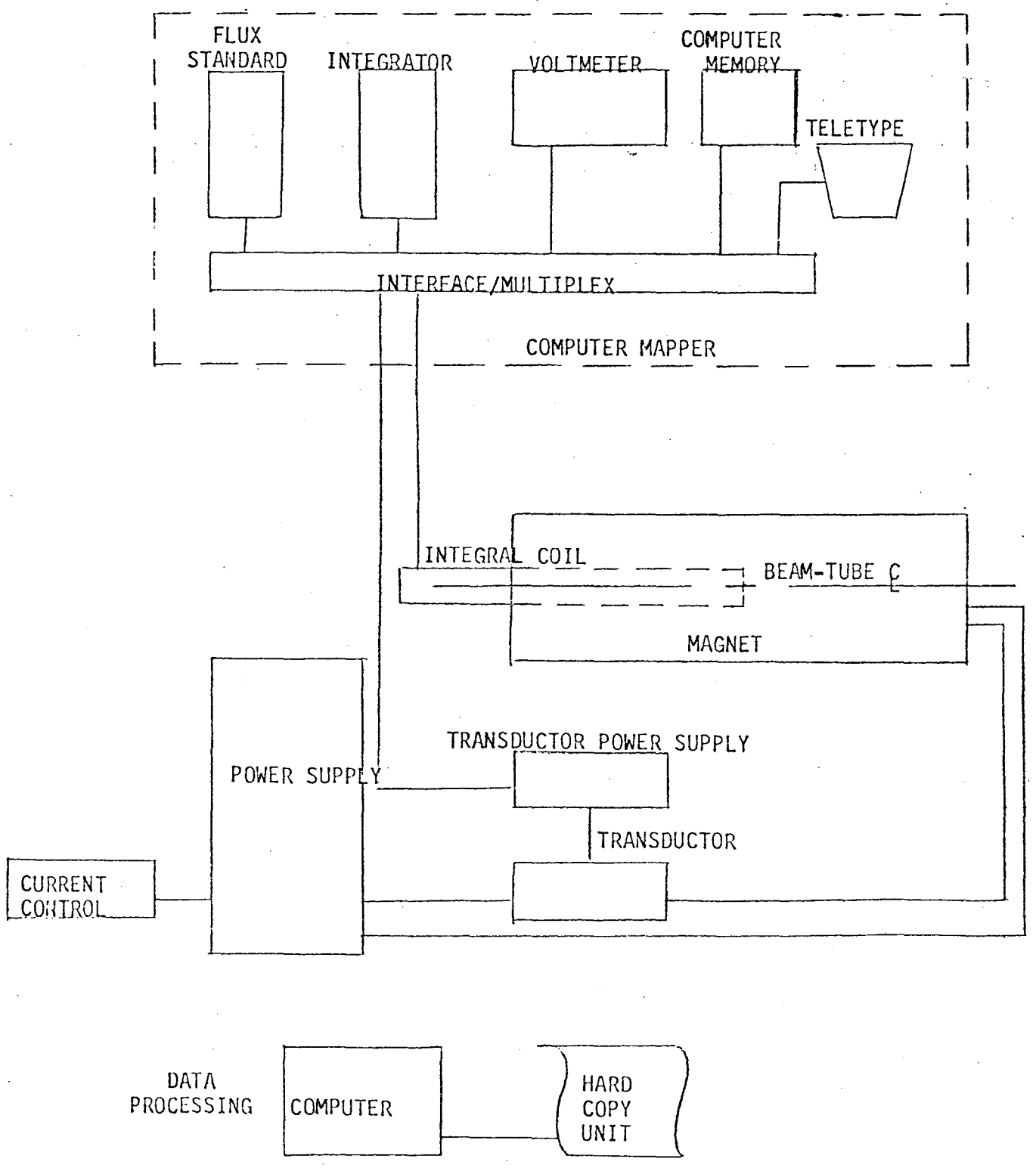

FIGURE 1 Test Equipment

DEVICE	IDENTIFICATION	NOTES
Magnet Power Supply	SCR, 128KW	AEC No. 147291
Current Control	(SLAC unit)	10 Amperes/Sec
Transductor (41B10)	901-119 12-RO-C	S/N 26
Transductor Power Supply	SD207460	S/N 1, Channel B
Transductor (42B10)	901-119 12-RO-C	S/N 27
Transductor Power Supply	SD207460	S/N 2, Channel B
Line Integral Coil	LBL, MME L-39	nw=0.2732 (turn meter)
Integrator	LBL, MME Mod 71 S/N 7	R=36.1KΩ, C=3.0μF Atten.=960
Flux Standard	LBL, MME SLFS41	S/N 41
DVM	Dymec Mod 2901B	AEC No. 127922
Data Logger	LBL Computer Mapper	LBL 1311 [2]
Hall Effect Gaussmeter	F. W. Bell Mod 620	AEC No. 500586
Hall Effect Probe	F. W. Bell HT340608	S/N 109946
Data Processing		
Computer	Tektronix Mod 4051	AEC No. 507545
Hard Copy Unit	Tektronix Mod 4631	AEC No. 504505

TABLE I Test Equipment

RL-398 7500-64257 (Rev. 9/73)

its longitudinal center line. A fixture was fabricated to position the coil on the pole piece center line in the main gap, i.e., on the y axis; see Figure 8. Another fixture was fabricated to position the coil on the y' axis. See Figure 9. Both of these fixtures allowed us to measure integrals of magnetic induction over a 7' (213 cm) length extending from the longitudinal center line of the magnet to points ∿63 cm beyond either end of the magnets.

Data from the two halves of each magnet were combined, and tablulations and graphs were prepared with the aid of the Tektronix computer.

TEST RESULTS

Tabulations and punched cards representing the main gap fields were delivered to Frank Rothacker in September, 1979.[4] Those data along with measurements in the stored beam vicinity are presented in the figures and graphs indicated in Table II (Key to Results).

Magnet	Description	Table	Page	Figure	Page
41B11	Main Gap 20 GeV	III	7	2	6
41B11	Main Gap 15 GeV	IV	9	3	8
42B11	Main Gap 20 GeV	V	11	4	10
42B11	Main Gap 15 GeV	VI	13	5	12
41B11	Circulating Beam Data			6	14
42B11	Circulating Beam Data			7	15

TABLE II Key to Results

This work was supported by the U.S. Department of Energy under Contract No. DE-AC03-76SF00098.

RL-398 7-80-54257 (Rev. 9/73)

REFERENCES

1. M. Kaviani and A. Lake, "PEP Transport Magnet 22B3000 (B11)", LBL Engineering Note M5197A.

2. D. Nelson, J. Dorst and J. Peterson, "PEP Injection Line Dipole 25B5249 (B-3 Type) Results of 1978 Magnetic Measurements", LBL Engineering Note MT 301, November 20, 1981.

3. D. Nelson, R. Main and J. Dorst, "PEP Transport Bend Magnets (41B10 and 42B10)", LBL Engineering Note MT 281, June 29, 1979.

4. D. Nelson, Memorandum to Frank Rothacker (cc: Peterson and Truher), Re: B-10 and B-11 Data, September 21, 1979.

DISTRIBUTION

K. Brown (SLAC)
J. Cobb (SLAC)
C. Dols
G. Fischer (SLAC)
E. Hartwig/L. Wagner/W. Deuser
M. Lee (SLAC)
R. Main
T. Martin (SLAC)
D. Nelson
J. Peterson
R. Reimers
F. Rothacker (SLAC)
J. Truher (SLAC)
J. Zelver
Magnetic Measurements Engineering (4)
Electronics Engineering Master File

SER.# 41B11 20 GEV RUN # 8 1800-7/12/79-- 0.20103 T*M/V
STRENGTH - B*L(eff)/I - TESLA-METER/KILOAMPERE.
4.4
4.38
4.36
4.34
4.32
4.3
4.28
4.26
4.24
4.22
4.2
4.18
4.16
4.14
4.12
4.1
4.08
4.06
4.04
4.02
4
0
50
100
150
200
250
300
350
400
450
500
550
600
650
700
MAGNET CURRENT - AMPERES

FIGURE 2

SER.# 41B11 20 GEV RUN # 8 1800-7/12/79-- 0.20103 T*M/U

DATA PT	CURRENT AMP.	COIL MV.	INTEGRAL BL (T*M)	STRENGTH BL/KAMP.
1	0.00	78.1	0.0157	
2	34.80	760.0	0.1528	4.3903
3	69.35	1447.7	0.2910	4.1966
4	103.75	2136.4	0.4295	4.1396
5	138.10	2831.0	0.5691	4.1210
6	172.25	3522.6	0.7081	4.1112
7	206.65	4224.8	0.8493	4.1099
8	240.95	4924.3	0.9899	4.1085
9	275.05	5618.4	1.1295	4.1064
10	309.35	6314.9	1.2695	4.1037
11	343.45	7007.6	1.4087	4.1017
12	377.65	7699.2	1.5478	4.0984
13	412.00	8389.5	1.6865	4.0935
14	446.00	9070.8	1.8235	4.0886
15	480.70	9761.3	1.9623	4.0822
16	514.90	10439.9	2.0987	4.0760
17	549.00	11115.6	2.2346	4.0703
18	583.00	11786.2	2.3694	4.0641
19	617.35	12458.6	2.5046	4.0569
20	634.50	12789.0	2.5710	4.0520
21	651.45	13116.2	2.6367	4.0475
22	668.20	13440.1	2.7019	4.0435
23	685.00	13760.1	2.7662	4.0382
24	668.20	13475.1	2.7089	4.0540
25	651.45	13178.6	2.6493	4.0668
26	616.95	12535.1	2.5199	4.0845
27	493.85	10128.9	2.0362	4.1231
28	370.55	7647.6	1.5374	4.1490
29	247.40	5144.4	1.0342	4.1802
30	124.10	2623.0	0.5273	4.2490
31	0.00	80.2	0.0161	

TABLE III

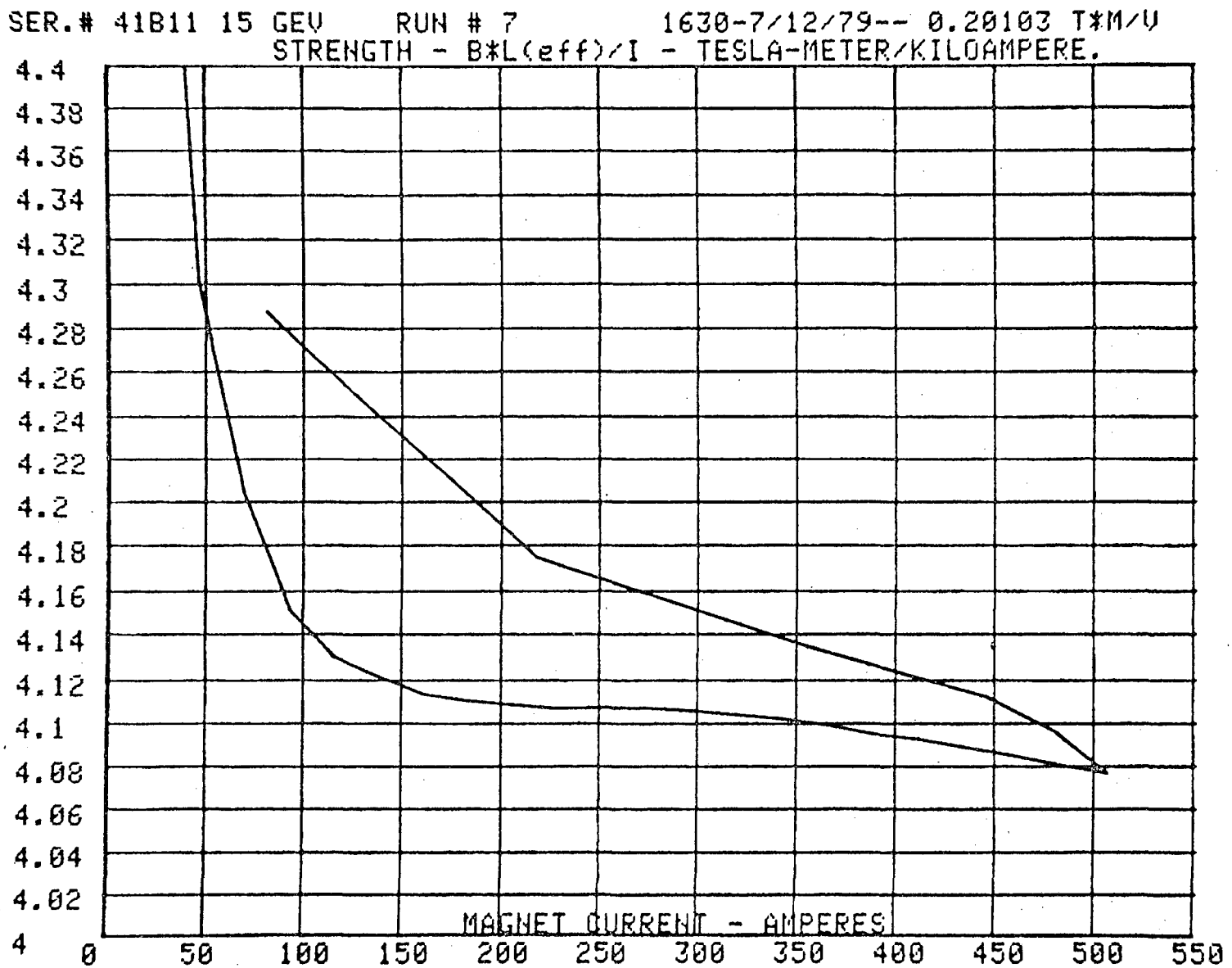
SER.# 41B11 15 GEV RUN # 7 1630-7/12/79-- 0.20103 T*M/V
STRENGTH - B*L(eff)/I - TESLA-METER/KILOAMPERE.
4.4
4.38
4.36
4.34
4.32
4.3
4.28
4.26
4.24
4.22
4.2
4.18
4.16
4.14
4.12
4.1
4.08
4.06
4.04
4.02
4
0
50
100
150
200
250
300
350
400
450
500
550
MAGNET CURRENT - AMPERES

FIGURE 3

SER.# 41B11T 15GEV RUN # 7 1630-7/12/79-- 0.20103 T*M/V

DATA PT	CURRENT AMP.	COIL MV.	INTEGRAL BL (T*M)	STRENGTH BL/KAMP.
1	0.00	78.0	0.0157	
2	23.40	539.4	0.1084	4.6340
3	46.50	994.9	0.2000	4.3012
4	69.50	1453.5	0.2922	4.2043
5	92.50	1910.2	0.3840	4.1514
6	115.20	2366.8	0.4758	4.1302
7	138.20	2833.0	0.5695	4.1210
8	161.00	3294.5	0.6623	4.1136
9	184.00	3762.3	0.7563	4.1105
10	206.80	4226.7	0.8497	4.1088
11	229.50	4688.4	0.9425	4.1068
12	252.50	5158.9	1.0371	4.1073
13	275.20	5621.7	1.1301	4.1066
14	298.10	6088.3	1.2239	4.1058
15	320.70	6546.4	1.3160	4.1036
16	343.50	7008.5	1.4089	4.1017
17	366.50	7472.7	1.5022	4.0989
18	389.25	7928.9	1.5939	4.0949
19	412.15	8389.6	1.6866	4.0921
20	434.70	8840.8	1.7773	4.0885
21	457.50	9297.1	1.8690	4.0852
22	480.80	9759.8	1.9620	4.0807
23	502.20	10286.0	2.0678	4.0769
24	480.80	9795.7	1.9692	4.0957
25	446.10	9124.7	1.8343	4.1119
26	355.10	7303.9	1.4683	4.1349
27	218.10	4529.2	0.9105	4.1747
28	80.85	1724.5	0.3467	4.2879
29	0.00	80.4	0.0162	

TABLE IV

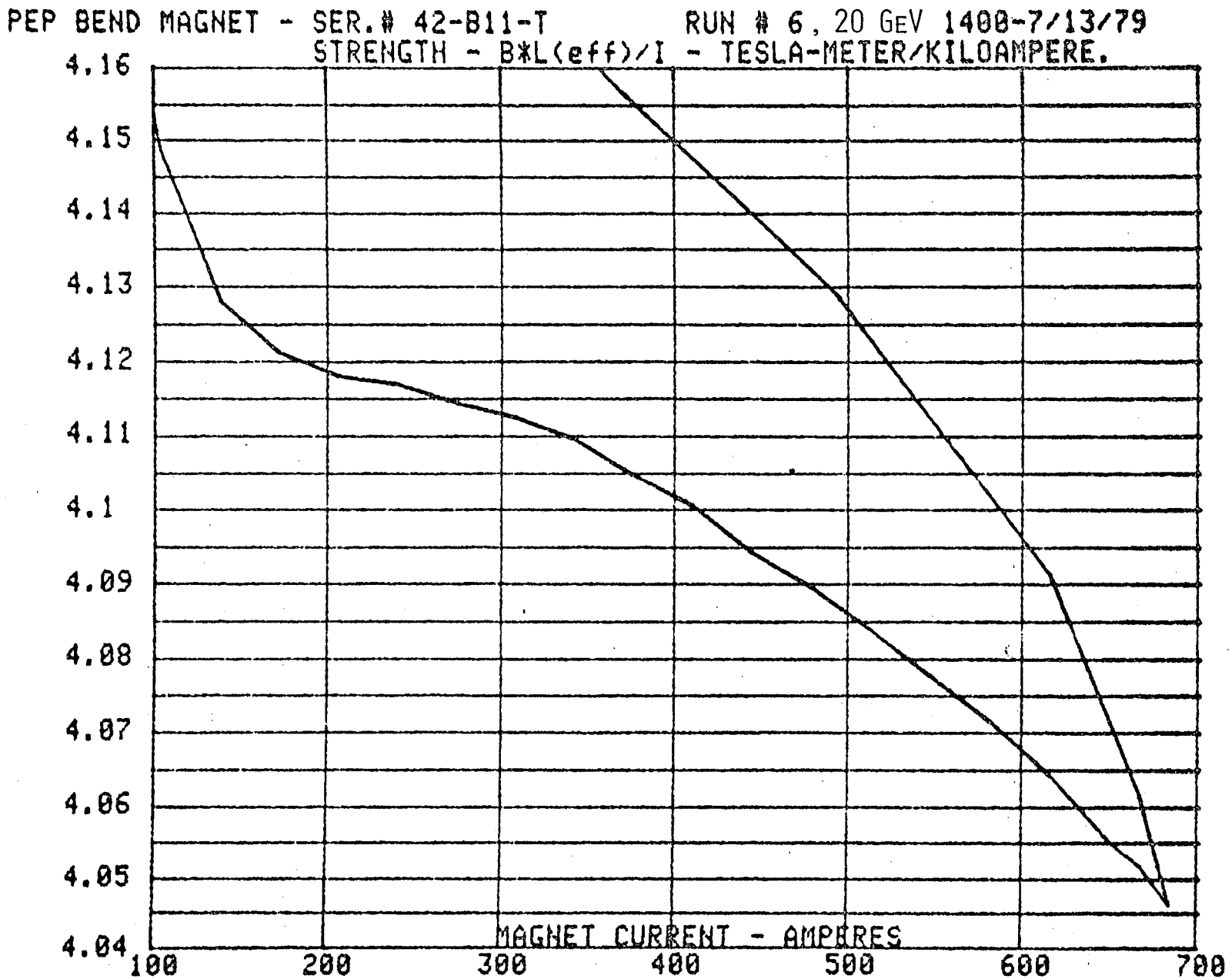
PEP BEND MAGNET - SER.# 42-B11-T
RUN # 6, 20 GeV 1400-7/13/79
STRENGTH - B*L(eff)/I - TESLA-METER/KILOAMPERE.
4.16
4.15
4.14
4.13
4.12
4.11
4.1
4.09
4.08
4.07
4.06
4.05
4.04
100
200
300
400
500
600
700
MAGNET CURRENT - AMPERES

FIGURE 4

PEP BEND MAGNET - SER.# 42-B11-T RUN # 6, 20 GeV 1400-7/13/79

DATA PT.	CURRENT AMP.	COIL MV.	INTEGRAL BL (T-M)	STRENGTH BL/KAMP.
1	0.0	77.4	15.5	
2	34.4	756.6	152.0	4.4161
3	68.9	1441.7	289.6	4.2068
4	103.2	2130.8	428.1	4.1490
5	137.5	2824.3	567.4	4.1281
6	171.6	3519.5	707.1	4.1213
7	205.9	4220.5	847.9	4.1181
8	240.2	4922.3	988.9	4.1170
9	274.3	5617.3	1128.5	4.1144
10	308.5	6315.3	1268.7	4.1125
11	342.5	7006.3	1407.6	4.1096
12	376.7	7696.5	1546.2	4.1047
13	411.0	8389.0	1685.4	4.1005
14	445.0	9069.1	1822.0	4.0943
15	479.6	9763.2	1961.4	4.0895
16	513.8	10444.0	2098.2	4.0838
17	547.9	11120.7	2234.1	4.0777
18	581.9	11792.1	2369.0	4.0716
19	616.2	12465.1	2504.2	4.0643
20	633.3	12797.7	2571.1	4.0596
21	650.7	13134.0	2638.6	4.0549
22	667.4	13460.1	2704.1	4.0516
23	684.2	13780.0	2768.4	4.0459
24	667.4	13492.4	2710.6	4.0612
25	616.2	12548.8	2521.1	4.0914
26	493.3	10139.2	2037.0	4.1291
27	370.0	7656.4	1538.2	4.1570
28	247.0	5149.2	1034.5	4.1876
29	123.9	2623.4	527.0	4.2536
30	0.0	79.7	16.0	

TABLE V

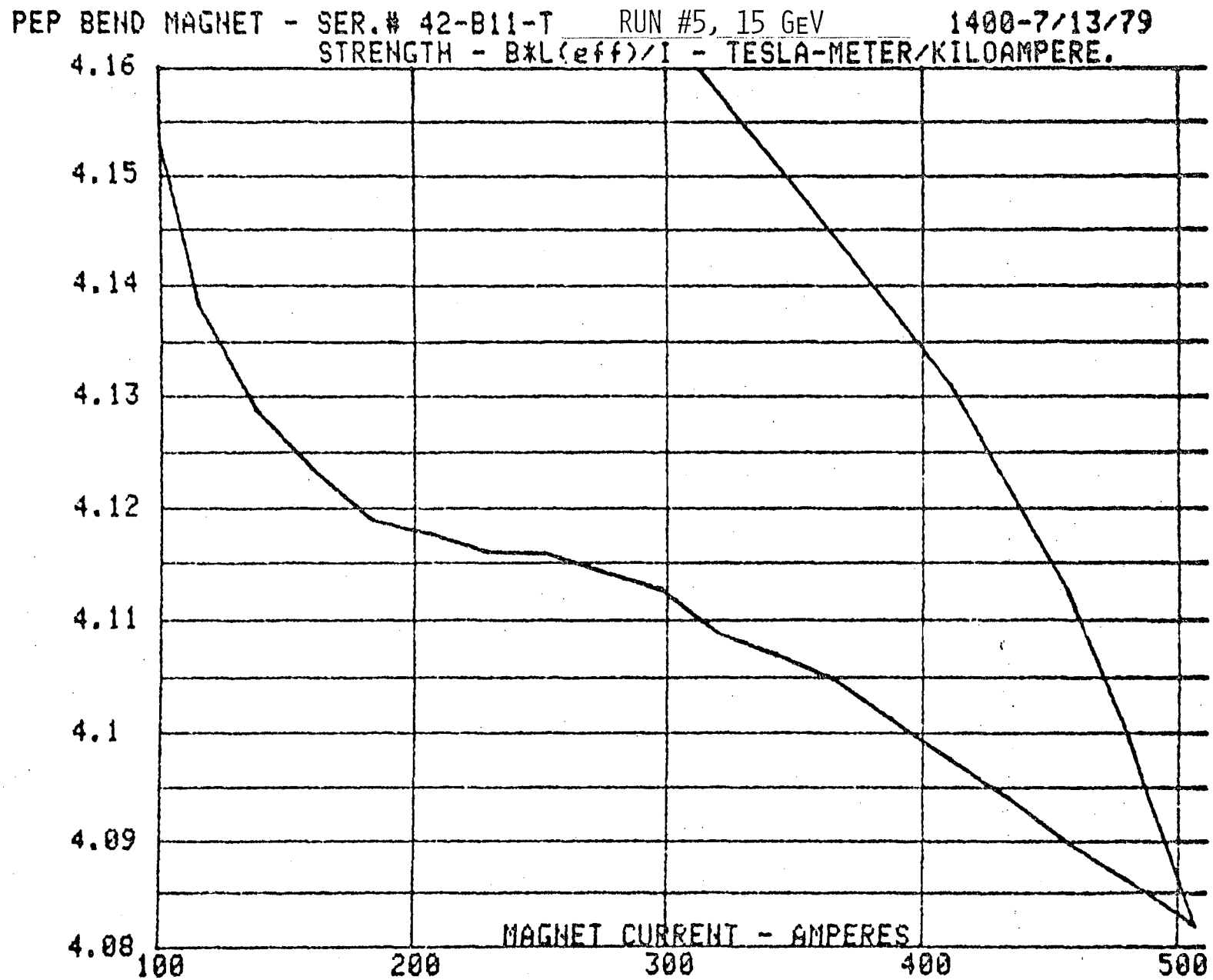
PEP BEND MAGNET - SER.# 42-B11-T RUN #5, 15 GeV 1400-7/13/79
STRENGTH - B*L(eff)/I - TESLA-METER/KILOAMPERE.
4.16
4.15
4.14
4.13
4.12
4.11
4.1
4.09
4.08
100
200
300
400
500
MAGNET CURRENT - AMPERES

FIGURE 5

PEP BEND MAGNET - SER.# 42-B11-T RUN #5, 15 GeV 1400-7/13/79

DATA PT.	CURRENT AMP.	COIL MV.	INTEGRAL BL (T-M)	STRENGTH BL/KAMP.
1	0.0	80.8	16.2	
2	23.0	531.4	106.7	4.6372
3	46.1	986.8	198.2	4.3018
4	69.0	1443.3	290.0	4.2008
5	91.9	1903.9	382.5	4.1609
6	114.6	2361.3	474.4	4.1384
7	137.6	2828.2	568.2	4.1288
8	160.3	3290.9	661.1	4.1234
9	183.3	3758.5	755.1	4.1189
10	206.1	4224.9	848.8	4.1177
11	228.7	4686.3	941.5	4.1160
12	251.8	5157.8	1036.2	4.1160
13	274.5	5620.7	1129.2	4.1143
14	297.3	6087.1	1222.9	4.1127
15	320.0	6544.6	1314.8	4.1088
16	342.7	7006.6	1407.6	4.1069
17	365.7	7471.1	1500.9	4.1047
18	388.4	7928.0	1592.7	4.1011
19	411.2	8387.4	1685.0	4.0975
20	433.8	8840.5	1776.1	4.0939
21	456.7	9296.7	1867.7	4.0898
22	479.9	9760.4	1960.9	4.0862
23	506.3	10286.4	2066.5	4.0820
24	479.9	9793.3	1967.5	4.1000
25	456.6	9346.7	1877.8	4.1127
26	411.2	8456.4	1698.9	4.1311
27	274.5	5700.3	1145.2	4.1715
28	137.7	2901.6	582.9	4.2333
29	0.0	82.5	16.6	

TABLE VI

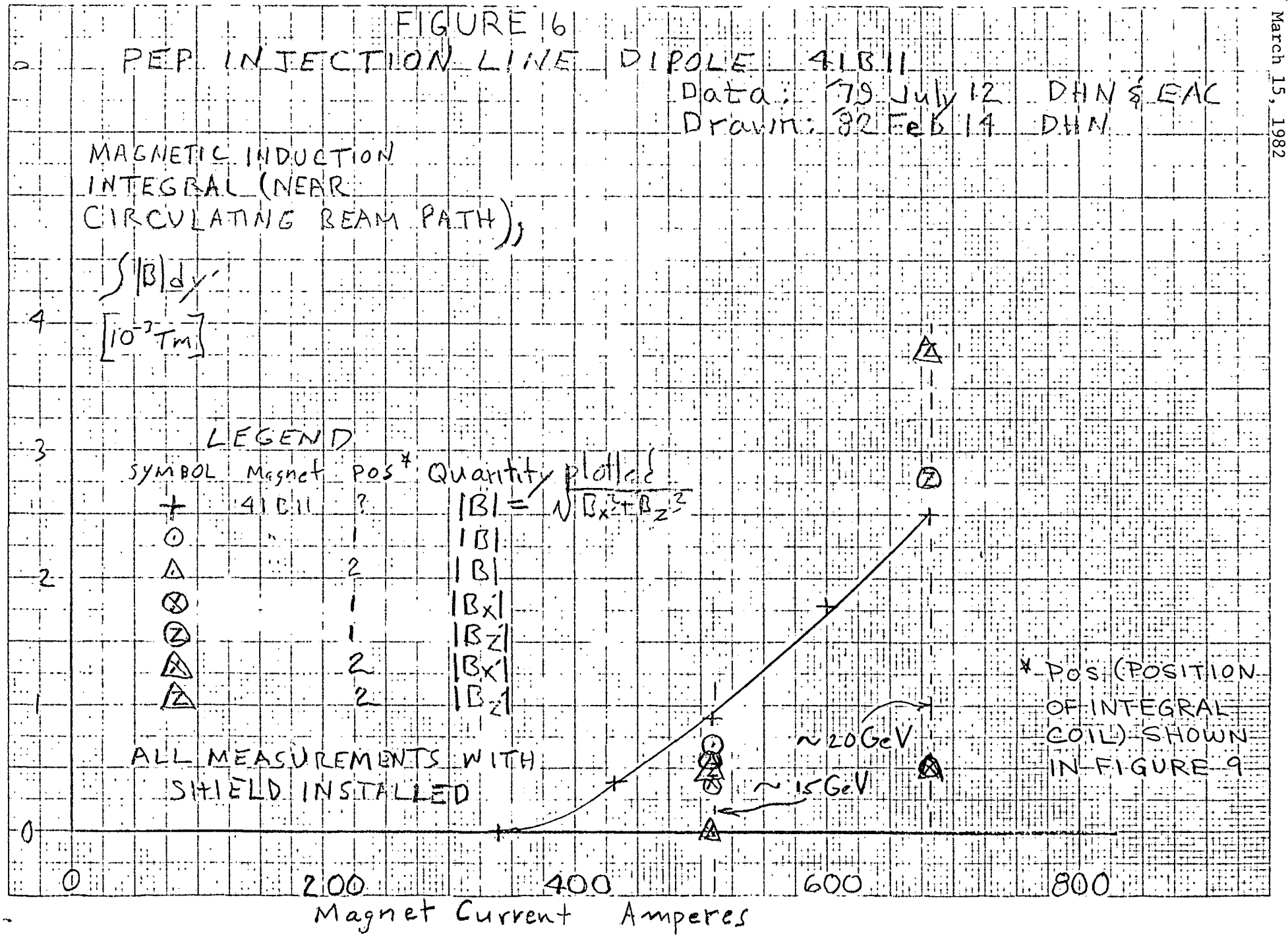
FIGURE 16
PEP INJECTION LINE DIPOLE 41B11
Data: '79 July 12 DHN & EAC
Drawn: '82 Feb 14 DHN
MAGNETIC INDUCTION INTEGRAL (NEAR CIRCULATING BEAM PATH);
∫|B|dy'
[10⁻² Tm]
LEGEND
SYMBOL Magnet Pos* Quantity plotted
+ 41B11 ? |B| = √(Bx² + Bz²)
⊙ |B|
△ 2 |B|
⊗ 1 |Bx|
Ⓩ 1 |Bz|
Ⓧ 2 |Bx|
Ⓩ 2 |Bz|
ALL MEASUREMENTS WITH SHIELD INSTALLED
~20 GeV
~15 GeV
* Pos (POSITION OF INTEGRAL COIL) SHOWN IN FIGURE 9
0
1
2
3
4
0
200
400
600
800
Magnet Current Amperes

FIGURE 7
PEP INJECTION LINE DIPOLE 42B-1

Data: '79 July 5 DHN & EAC
Drawn: '82 Feb 14 DHN

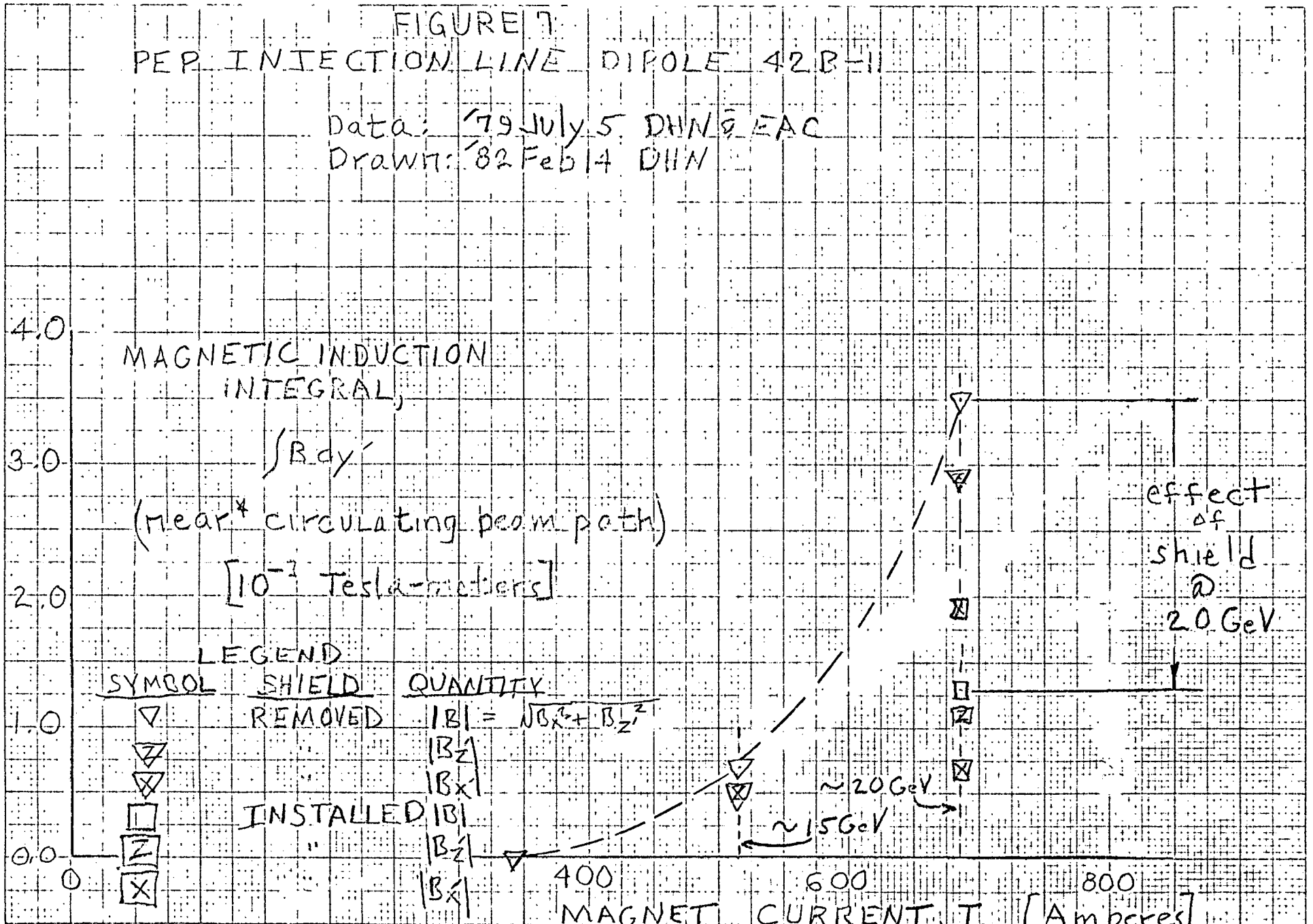

*MEASUREMENT LOCATION UNCERTAIN; PROBABLY POS 1, SHOWN IN FIGURE 9.

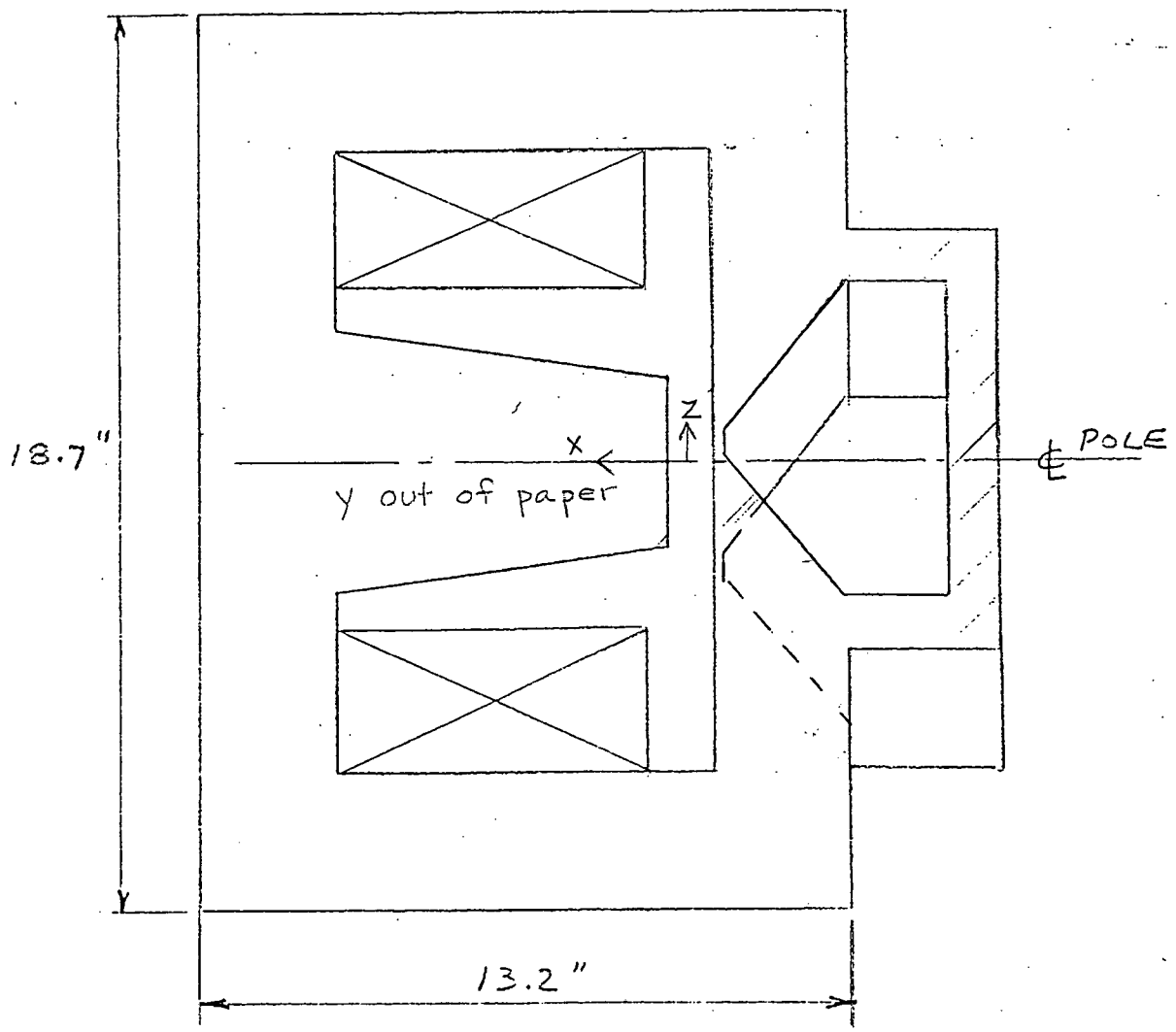

Figure 8* 42B11 Elevation, Exit End

Viewed upstream with respect to the injected beam (electrons), i.e., injected electrons travel nominally in the +y direction. The Exit End View of 41B11 is a mirror image of Figure 8 injected positrons also travel in the +y direction.

*Figure 8 is adapted from Mechanical Engineering Note M5197B (PE0103, LBID-130) by M. Kaviany and A. Lake, June 20, 1978. This figure was modified for MT 311 by D.H. Nelson in March, 1982.

RL-398 7600-64257 (Rev. 9/78)

Figure 9 Horizontal Section as magnets are installed.*
(Drawn March 1, 1982, JMP)

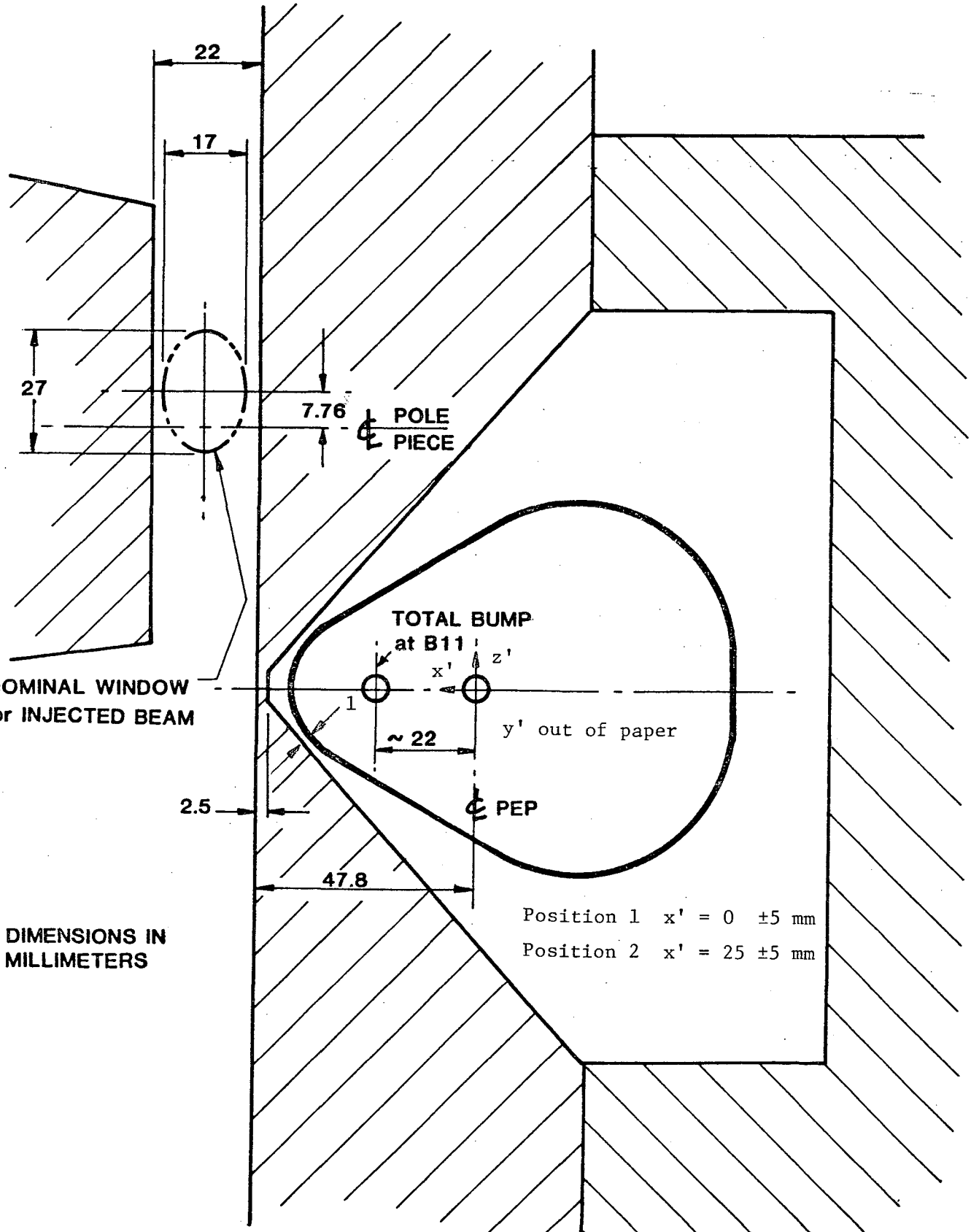

*Section at entrance end of 41B11, viewed in direction of stored positron circulation (-y').

This report was done with support from the Department of Energy. Any conclusions or opinions expressed in this report represent solely those of the author(s) and not necessarily those of The Regents of the University of California, the Lawrence Berkeley Laboratory or the Department of Energy.

Reference to a company or product name does not imply approval or recommendation of the product by the University of California or the U.S. Department of Energy to the exclusion of others that may be suitable.

TECHNICAL INFORMATION DEPARTMENT
LAWRENCE BERKELEY LABORATORY
UNIVERSITY OF CALIFORNIA
BERKELEY, CALIFORNIA 94720