LBID-507
c.1

Lawrence Berkeley Laboratory

UNIVERSITY OF CALIFORNIA

Engineering & Technical Services Division

RECEIVED
LAWRENCE
BERKELEY LABORATORY

MAY 24 1982

LIBRARY AND
DOCUMENTS SECTION

For Reference

Not to be taken from this room

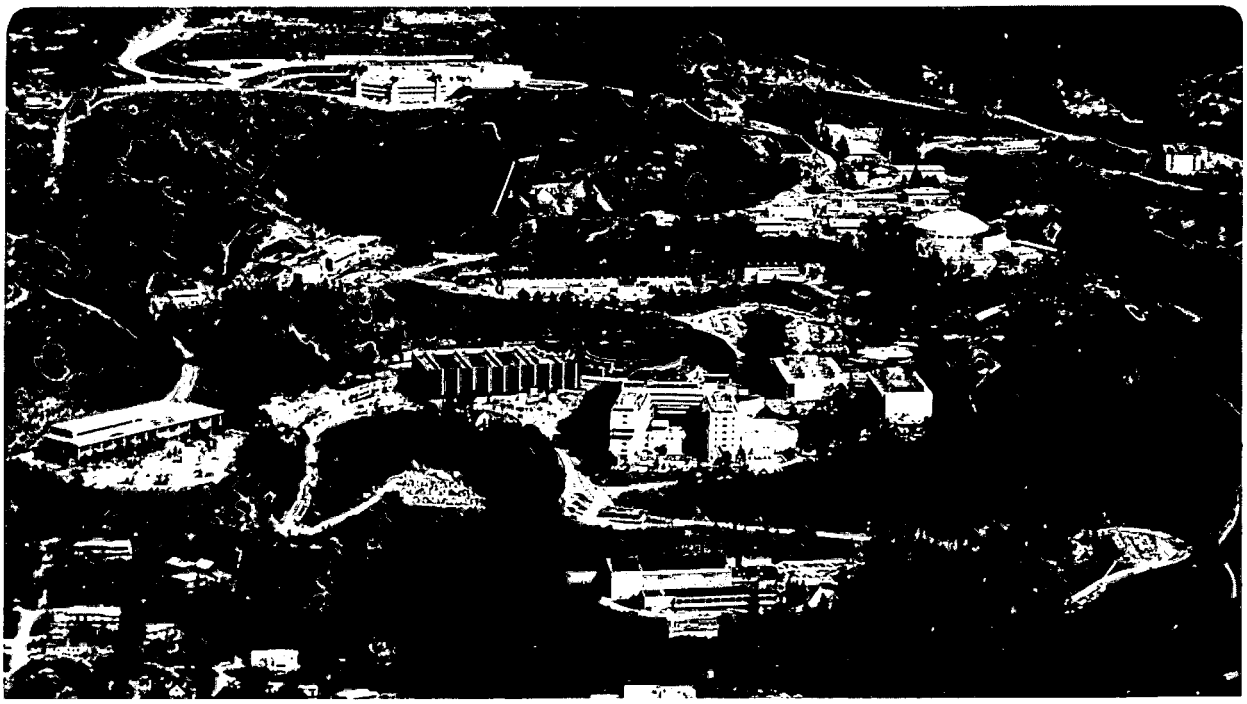

LBID-507
c.1

DISCLAIMER

This document was prepared as an account of work sponsored by the United States Government. While this document is believed to contain correct information, neither the United States Government nor any agency thereof, nor the Regents of the University of California, nor any of their employees, makes any warranty, express or implied, or assumes any legal responsibility for the accuracy, completeness, or usefulness of any information, apparatus, product, or process disclosed, or represents that its use would not infringe privately owned rights. Reference herein to any specific commercial product, process, or service by its trade name, trademark, manufacturer, or otherwise, does not necessarily constitute or imply its endorsement, recommendation, or favoring by the United States Government or any agency thereof, or the Regents of the University of California. The views and opinions of authors expressed herein do not necessarily state or reflect those of the United States Government or any agency thereof or the Regents of the University of California.

SUBJECT: UNDULATOR MAGNET, STANFORD SYNCHROTRON RESEARCH LAB - TEST PLAN

NAME: Donald H. Nelson

DATE: August 29, 1980

Introduction

On August 14, Dr. Klaus Halbach, Egon Hoyer, John Chin and I met to discuss magnetic measurements for the Undulator Magnet (Figures 1[1] & 2). Hoyer conducted the meeting, following an outline entitled "Tenative Undulator Magnetic Measurement Program". In the meeting and in subsequent discussions the following test plan developed.

This test plan was written 1) to provide continuity between Dr. Michael I. Green and myself (I plan to be on vacation from August 18 through August 24 and M.I.G. will be on vacation August 23 through September 1), 2) to convey to Klaus Halbach and Egon Hoyer my understanding of their requirements, and to define areas where Magnetic Measurements Engineering requires additional guidance, 3) to define areas of responsibility and 4) to establish test procedures (or to provide a starting point for modifying test procedures).

Tests Required

I. Calibrate two coils in an attempt to understand anomolous data reported in preliminary magnetic measurement report.[2]

II. Orient two end rotator systems such that the upper and lower rotatable magnet assemblies are synchronized, i.e., such that both the maximum (and minimum) fields produced by the upper and lower rotatable magnet assemblies occur simultaneously. (1.5*)

III. Measure the tuning range available from the rotator assemblies at each end. (1.4)

IV. Determine transverse field profile at the longitudinal (x) positions shown in Fig. 5.

* Decimal numbers 1.2 through 2.27 were used for reference in reference 1 or have been defined subsequently.

RL-398 7600-64257 (Rev. 9/73)

V. Determine correct orientation of rotatable magnet assemplies for reducing $\int_{-\infty}^{0} Bdl$ & $\int_{0}^{+\infty} Bdl$ to zero, i.e. less than 50 Gauss cm . (2.21)

IV. Check results in (V) by measuring $\int_{-\infty}^{\infty} Bdl$ for the orientation; determined in (V). (2.22)

VII. Measure longitudinal end profiles. (2.26)

VIII. Measure longitudinal "undulation". (2.24)

IX. Measure longitudinal periodicity. (2.23)

X. Measure longitudinal vertical symmetry. (2.27)

Order of Tests

Test I was completed 8/14/80 (Nelson & Cyr). Tests II (Cyr with guidance from Hoyer) and III (Cyr) can be done once 1) the rotator assemblies are installed (Chin) and 2) a fixture is fabricated that will position coil B-150 precisely on the undulator midplane (± tol. to be specified by Halbach) and on center lines (longitudinal and transverse) of rotatable magnet assemblies (Chin). Test IV (Cyr) can be done immediately and may precede II & III. Tests V & VI (Nelson) require 1) that Test II has been completed (Cyr & Hoyer) and 2) that the Undulator Test Coils [3,4] have been fabricated (Quan). Test VII (Nelson) requires that Tests V & VI have been completed. Tests VIII (Green), IX (Nelson) & X (Nelson) require that all internal magnets are installed. Test VIII requires 1) mounting a Hall-probe on the existing longitudinal positioner (Chin) and 2) completion of coding for Magnetic Measurements Engineering Data Logger (Green). Tests IX & X could precede Test VIII, but a complete analysis of the error terms, revealed in IX & X, requires measured magnitudes of "undulation" from Test VIII. Test X requires the fabrication of a fixture (Chin) that will 1) hold coils B-148 & B-150 on the longitudinal center line of the undulator, 2) place the coils equidistant from the vertical midplane and 3) attach fixture to longitudinal positioner. The longitudinal range for Tests VIII, IX & X needs to be defined (Hoyer).

RL-388 7600-44257 (Rev. 9/7

Test Procedures

I. Calibrating the 3 cm & 6 cm coils was done by moving each coil separately between a mu-metal shield and an NMR Calibrated Reference Magnet and recording the flux linkage. Using a Square-Loop- Flux-Standard (SLFS)[5] for determining the transfer function of the integrator, we established the following coil parameters.

Coil	3 cm long x 1 cm wide	6 cm long x 1 cm wide
$nA_{measured}$[6]	29.6 (turn cm^2)	125 (turn cm^2)
$\frac{nA_{measured}}{A_{design}}$	~10 (turns)	~21 (turns)
n_{design}[1]	20 (turns)	10 (turns)

The information that the number of turns on the two coils was interchanged during fabrication removed the anomaly in the data of ref. 2.

II. Synchronizing the rotatable magnet assemblies at each end.

A. Equipment Required (See Fig. 3)

Coil B-150 (properly mounted in fixture)		nA = 5375 cm^2
Flux Standard	SLFS 39.05	ϕ = 0.04904 Volt-sec
Integrator	Mod 71 S/N 2	R = 46.3K C = 0.1μF Atten = 10.00
Voltmeter	Keithly Mod. 177	S/N 10450

B. Procedure

1. Disconnect link between upper & lower rotatable magnet assemblies and rotate lower magnet assembly to ~horizontal.
2. Rotate top magnet to get maximum signal at output of integrator. Record signed magnitude of signal = A_{max}
3. Rotate top magnet ~180° and find orientation for a minimum output of integrator. Record signed magnitude of signal = A_{min}
4. Compute $A_1 = (A_{max} - A_{min})/2$ & $A_2 = (A_{max} + A_{min})/2$

5. Rotate top magnet ~90° clockwise to position where the integrator output voltage equals $A2_{upper}$ and lock in place.
6. Repeat 2 - 4 for lower magnet assembly. (Leave upper magnet ~ horiz.)
7. Rotate lower magnet ~90° counter-clockwise to position where the output voltage equals $A2_{lower}$ and lock into place.
8. Engage coupling between upper and lower magnet assemblies.

III. Measure the tuning range of rotatable magnet assembly pairs at two ends of undulator for four gaps each.

A. Equipment (See Fig. 4)

Integral Coil	L-36	nw = 7.69 (t-cm)
SLFS	39.01	ϕ = 0.00958 (volt-sec)
Integrator	Mod. 71 S/N 2	R = 23.7 (kΩ)
		C = 0.1 (μF)
		Atten = 1000
Voltmeter	Keithley Mod. 177	S/N 10450

B. Procedure

1. Position Integral Coil on undulator midplane ± 0.020 in. and centered between the rotatable assemblies both longitudinally and transversely (± 0.125).
2. Calibrate Integrator System with SLFS
3. Rotate magnet assemblies to a position where the integrator output voltage is a maximum (E_{max}). Record E_{max}.
4. Rotate magnet assemblies to produce a minimum output voltage (E_{min}).
5. Repeat 3 & 4 to assure reproducibility
6. Calculate $\Delta\int Bdl\big|_{\substack{pk\ to\ pk \\ (Gauss\text{-}cm)}} = \dfrac{\phi SLFS}{nw|_{L-36}} \dfrac{E_{max} - E_{min}}{E_{SLFS}} * 10^8 \left[\dfrac{maxwells}{Wb}\right]$
7. Repeat 1-6 for 4 gaps total. Note shim which places coil L-36 at a midplane will be different for each gap.
8. Repeat 1-7 at opposite end of undulator.

RL-398 7600-4357 (Rev. 9/72)

IV. Determine transverse field profile at longitudinal positions corresponding to maximum and minimum amplitudes of Magnetic Induction.

A. Test Equipment (See Fig. 5)

Same as II plus:

Milling Head	LBL 2 dim. lead screw
16 in. Linear Positioner (replaces fixture in II)	LBL
Bias Box	LBL Drwg. 5V 8032
Divider	
xy Plotter	Moseley Mod. 7000AR, AEC NO. 159250

B. Procedure

1. Set y-gain of xy plotter to give 1 cm deflection on y-input for 1 cm movement of linear positioner slide.
   a) With slide at a reference position e.g. flush with guide, adjust zero controls for no pen deflection when test button depressed.
   b) Adjust plotter zero for a convenient reference line; then drop and raise pen.
   c) Move slide a known distance (e.g. 10 cm), adjust range coarse & fine controls to give 20 cm deflection of pen; drop & raise pen.
   d) Return slide to reference, drop & raise pen to check position and repeat if necessary.
2. Place coil in slide & locate linear positioner.
3. Set divider to give convenient sensitivity for x input to xy plotter e.g. to get 100 G/cm.

$$\phi 39.05 = 0.04904 * 10^8 \text{ Maxwells}$$

$$(nA)_{B-150} \cong 5375 \text{ cm}^2$$

$$\therefore B_{eg} = \phi/nA = 912 \text{ Gauss}$$

   a) Zero integrator and set pen to reference line using x zero control.
   b) Depress SLFS reverse button & hold.
   c) Adjust x-gain of recorder to provide deflection > 10 cm with Divider set at 9999.

RL-398 7600-64267 (R

d) Reduce divider setting until SLFS gives 9.12 cm deflection.

e) Repeat a-d for reproducibility.

4. Set slide to a reference position with coil in mu-metal shield and zero integrator. Adjust recorder x-zero for a convenient reference line to correspond to reference position.

5. Drop pen to plot profile.

6. Move to positions of interest.

7. Change gap and repeat 2, 4, 5 & 6 for 4 gaps total.

8. Label curves completely!!! A pair of SLFS dots should be shown on each graph!

V. Determine correct orientation of rotatable magnet assemblies for reducing half integrals to zero.

A. Equipment Required (See Fig. 6)

Same as II plus

1.1 m coils	nw = 25 turn cm
mu-metal shields	2.2 m total length

B. Procedure

1. With 1.1 m coil in shield, zero integrator.
2. Move coil into position on longitudinal axis of undulator.
3. Rotate magnet assembly to reduce $\int Bdl$ to 50 G-cm record orientation for gap and end.
4. Repeat 1-3, 4 gaps total.
5. Repeat 1-4, two ends total.

VI. Same as V except two coils aiding to measure $\int_{-\infty}^{\infty} Bdl$

VII. Measure Longitudinal End Profiles

A. Equipment required (See Fig. 7)

Same as IV

B. Procedure

1. Set x-gain of xy plotter to give 1 cm deflection of x input for 1 cm deflection of linear positioner slide.
   Similar to IV B-1, except 1:1 & x-axis instead of y-axis.
2. Same as IV B-2
3. Same as IV B-3, except using y-axis for B.

4, 5. Same as IV B-4, 5

6. Move to opposite end

7, 8. Same as IV B-7, 8

VIII. Measure longitudinal "undulation"

A. Equipment Requried (See Fig. 8)

Hall Probe	F.W. Bell Mod. HTJB-0608	S/N 85217
Gaussmeter	F.W. Bell Mod. 810R3	S/N 139638
Extension Cable	F.W. Bell Mod. X0Q4-0025	S/N 85217
Voltmeter	Hewlett Packard 3455A	S/N 1622A08417
Computer	Tektronix Mod. 4051	S/N B051568
Hard Copy	Tektronix Mod. 4631	S/N B094611

B. Procedure (minimum preparation, maximum effort)

1. Zero & calibrate Gaussmeter
2. Mount Hall Probe on longitudinal positioning system
3. Move to a position
4. Enter position & magnetic induction, $B_{(position)}$, into computer by way of keyboard (or have DVM interfaced directly to computer).
5. Provide Hard Copy
6. Data inspection to consist of plotting all or any part of points $B_{(position)}$ vs. Position

IX. Measure longitudinal periodicity

A. Equipment Required

Same as III plus:

6 cm coil

B. Procedure

1. Pre-determine expected & tolerable fluctuation on scope (consultation with Halbach).
2. Attach 6 cm coil to longitudinal positioner.
3. Move through undulator observing fluctuations.
4. Report unexpected or intolerable fluctuations.
5. Repeat for 4 gaps total.

X. Measure longitudinal vertical symmetry

A. Equipment Required (See Fig. 9)

Point Coil	B-150	(nA) =
Point Coil	B-148	(nA) = 5345 cm^2
FLUXSTD #1	SLFS 39	
Divider	LBL	Drwg. No. 5V7983
FLUXSTD #2		
Integrator	Mod. 71, S/N 2	R = C = DIV =
Positioner		

B. Test Procedure

Same as IX.

References

1. Chan, T., LBL Photograph XBL 8049277, LBL-SSRL Undulator, April, 1980.

2. Hoyer, E. & Chin, J.W.G., Mechanical Engineering Note HF 9001, "Magnetic Measurements with 3 cm & 6 cm search coils.

3. Hoyer, E. Mechanical Engineering Drawing 18Q 5203, "1.1 m-20 Turn Search Coil", June 7, 1980.

4. Nelson, D.H., Memo to Klaus Halbach, Subject: Undulator Coils, June 24, 1980.

5. Macondray, F.W., LBL Report UCRL 17639, The "Square Loop" Flux Standard: A Precision Pulse Generator.

6. Nelson, D.H. LBL Magnetic Measurements Engineering Data Book No. 626, Undulator Magnet Tests - Stanford Research Lab, August, 1980.

Distribution:

J.W.G. Chin
E.A. Cyr
M.I. Green
K. Halbach
E. Hoyer
W. Quan
Herman Winick (SSRL)
Ya du Zambre (SSRL)
C.G. Dols
W.H. Deuser
E.C. Hartwig/L. Wagner

Electronics Engineering Master File (2)
Magnetic Measurements Engineering (4)

This work was supported by the U.S. Dept. of Energy under Contract DE-AC03-76SF00098.

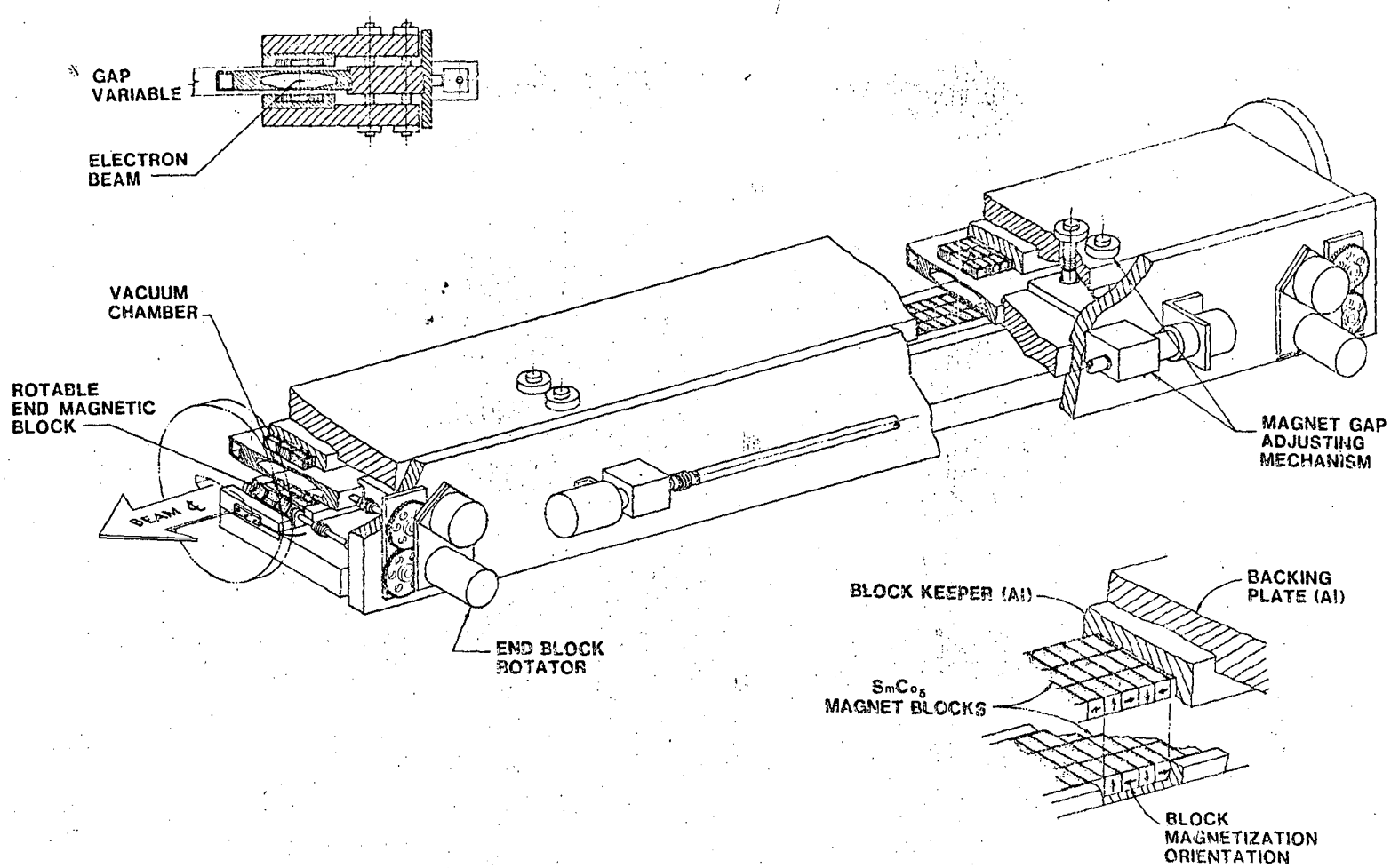

FIGURE 1 LBL - SSRL UNDULATOR

XBL 804-9277

*Gap Dimensions Selected for Measurement: 2.7, 3.5, 4.5 & 6.0 (cm)

Drwn '80 April Tom Chan

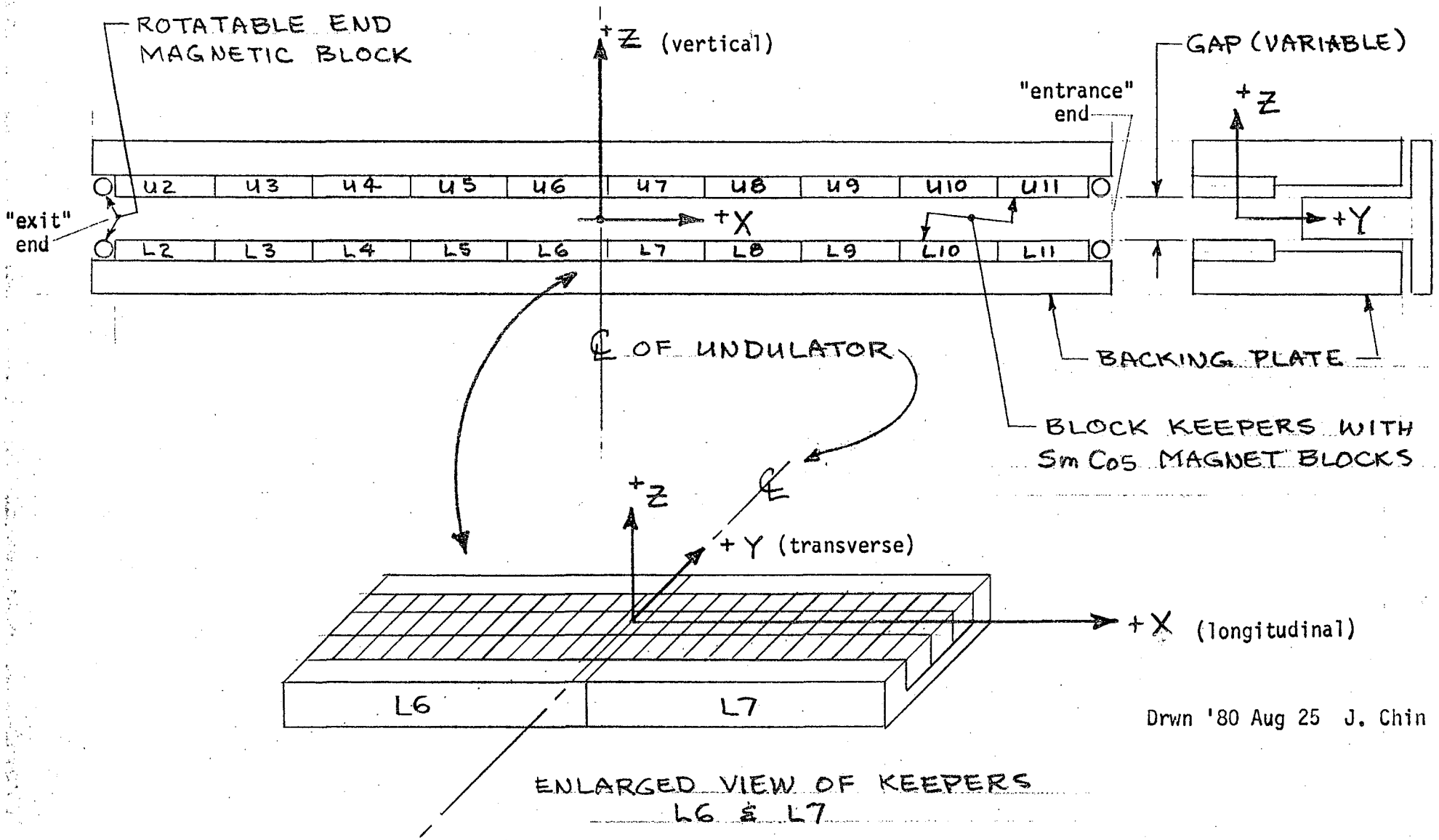

UNDULATOR FIG 2

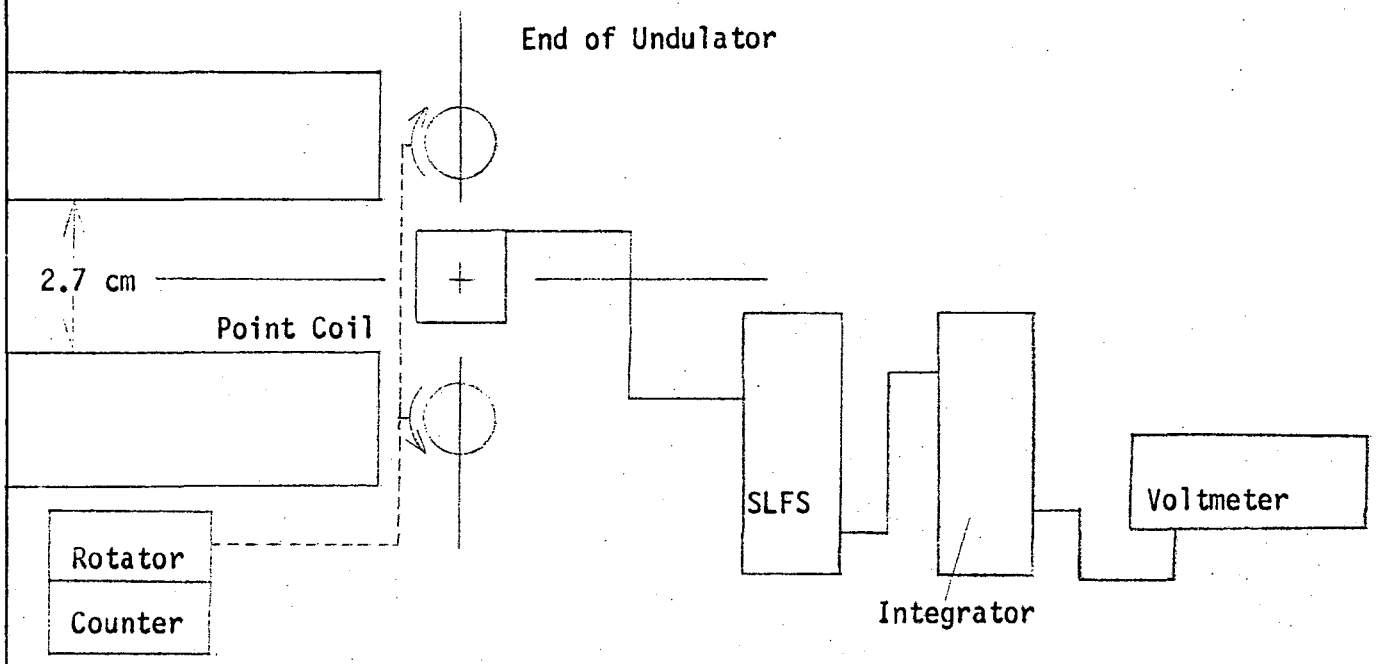

FIGURE 3 Equipment Required for Test II

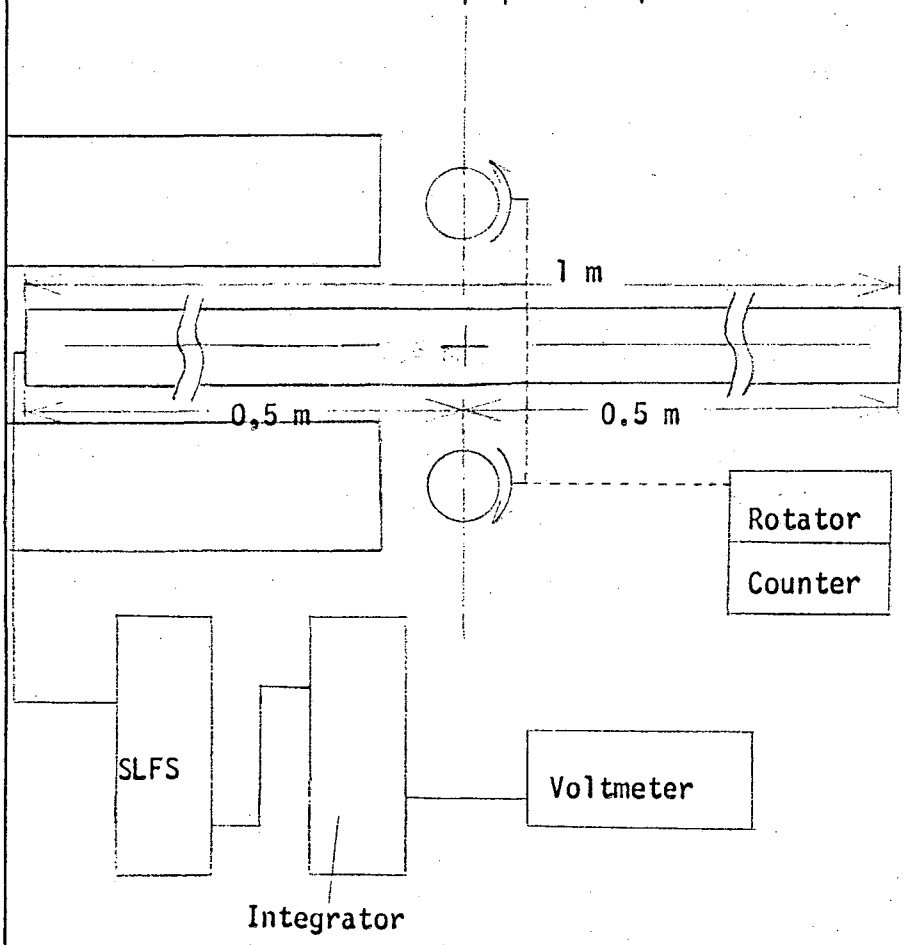

FIGURE 4 Equipment Required for Test III

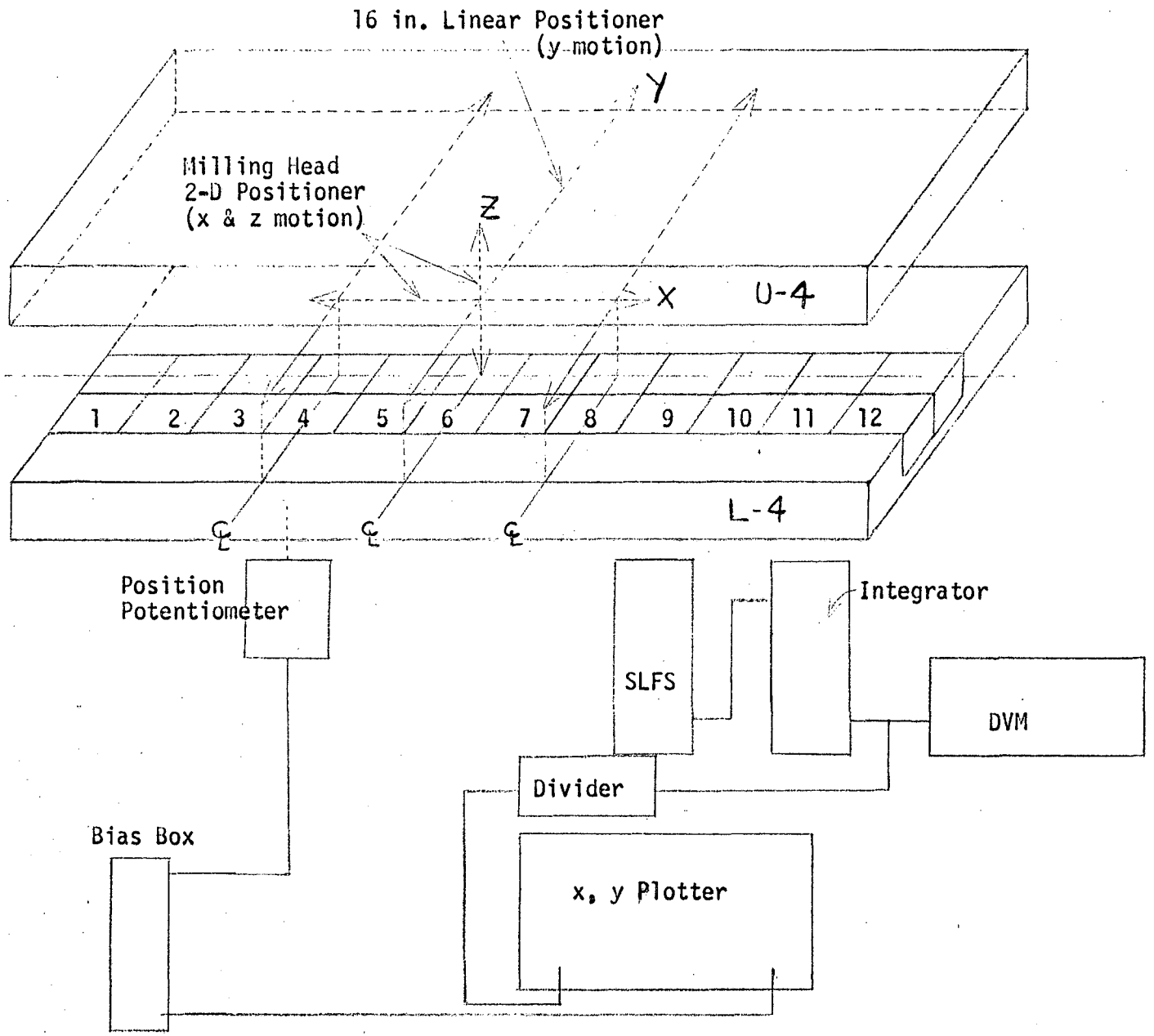

FIGURE 5 Equipment Required for Tests IV & VII

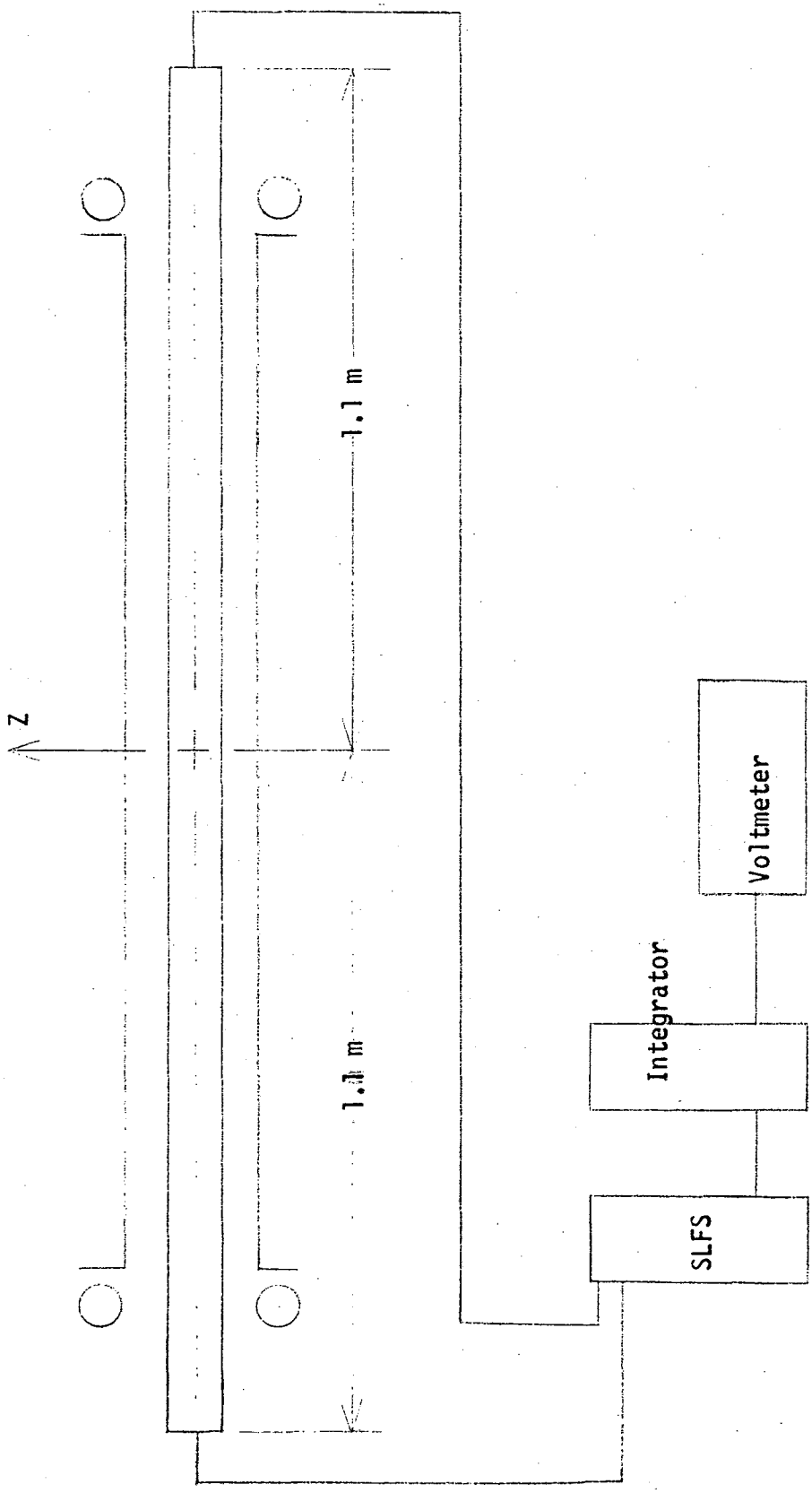

FIGURE 6 Equipment Required for Tests V & VI

RL-112 (Rev. 8/75) 600-55589

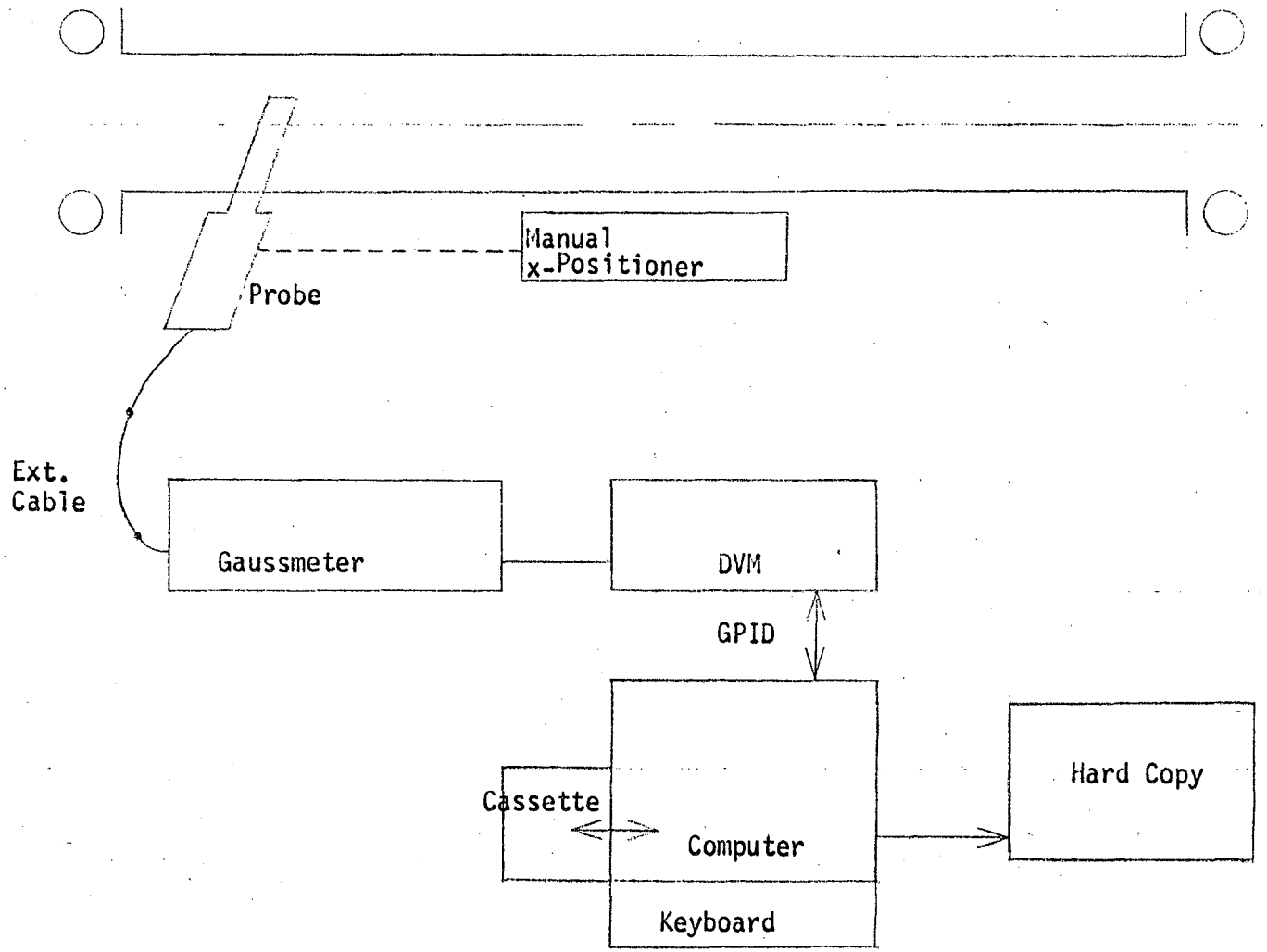

FIGURE 7 Test Equipment Required for Test VIII

SUBJECT UNDULATOR MAGNET, STANFORD RESEARCH LAB-TEST PLAN

DRAWN BY KS DATE 8/27/80

BLDG. NO. ROOM NO.

SKETCH

LAWRENCE BERKELEY LABORATORY
UNIVERSITY OF CALIFORNIA

APPROVED BY DATE

JOB ORDER INFORMATION

Job No. Tag No.
Serial No. No. Reqd.
Date Date
Issued Reqd.
Deliver To

SKETCH NUMBER

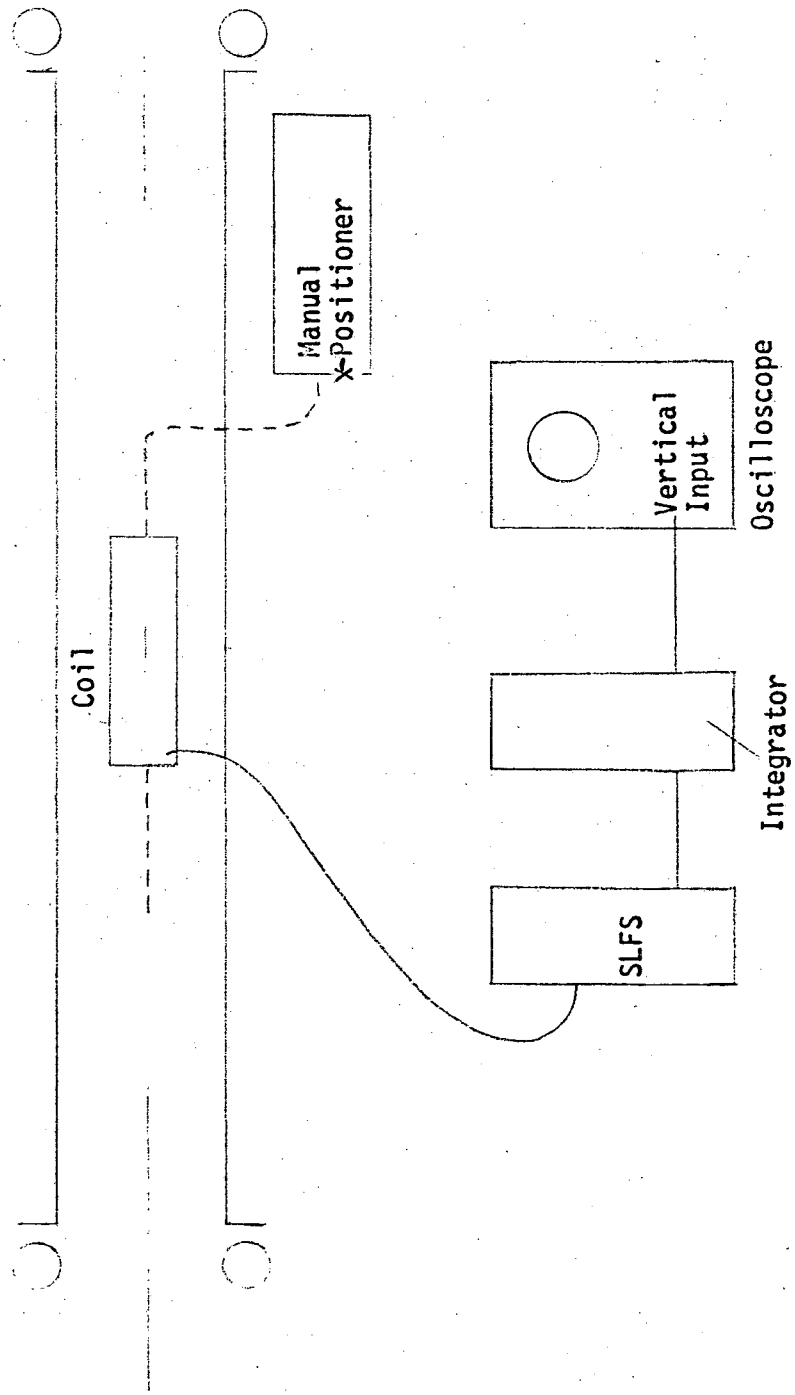

FIGURE 8 Test Equipment Required for Test IX

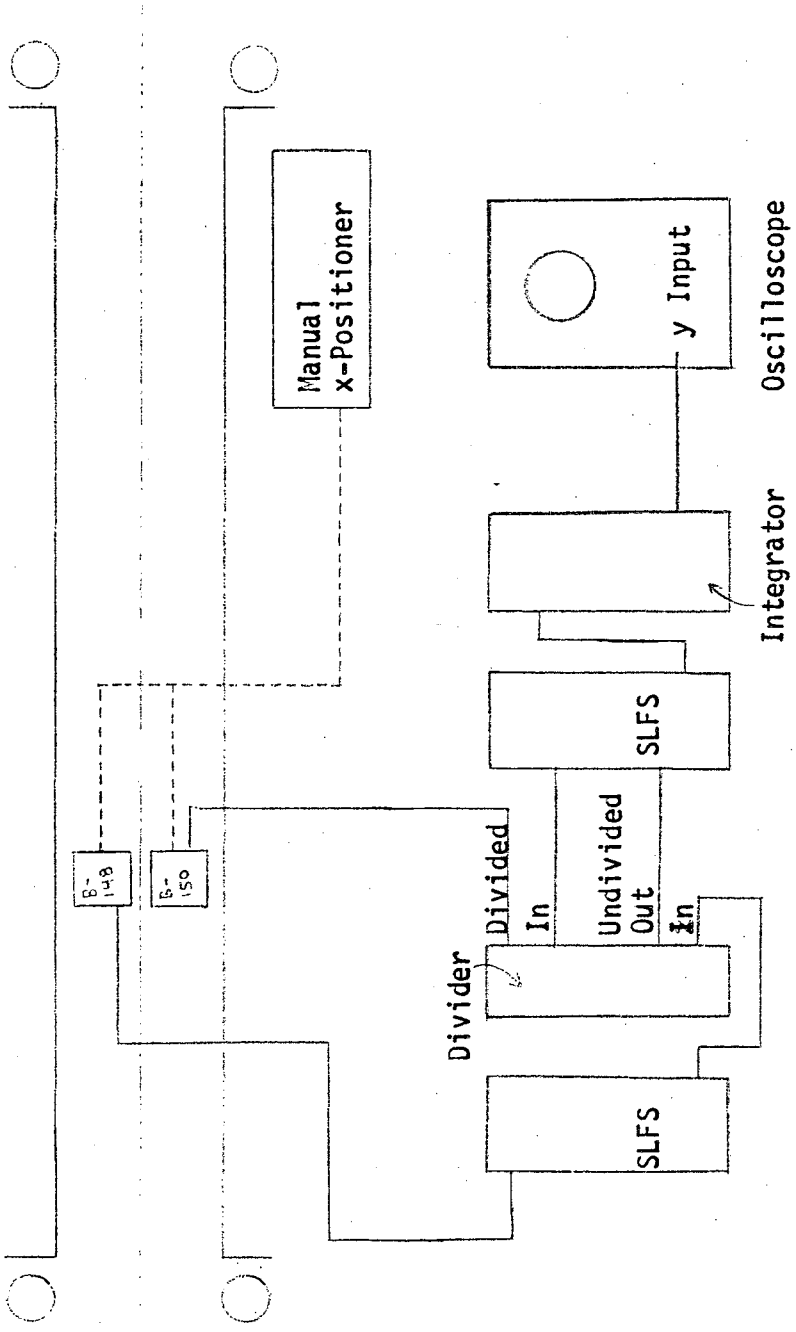

FIGURE 9 Test Equipment for Test X

This report was done with support from the Department of Energy. Any conclusions or opinions expressed in this report represent solely those of the author(s) and not necessarily those of The Regents of the University of California, the Lawrence Berkeley Laboratory or the Department of Energy.

Reference to a company or product name does not imply approval or recommendation of the product by the University of California or the U.S. Department of Energy to the exclusion of others that may be suitable.

TECHNICAL INFORMATION DEPARTMENT
LAWRENCE BERKELEY LABORATORY
UNIVERSITY OF CALIFORNIA
BERKELEY, CALIFORNIA 94720