LBID-218 c.1

Lawrence Berkeley Laboratory

UNIVERSITY OF CALIFORNIA

Engineering & Technical Services Division

RECEIVED
LAWRENCE
BERKELEY LABORATORY

JUN 8 1982

LIBRARY AND
DOCUMENTS SECTION

For Reference

Not to be taken from this room

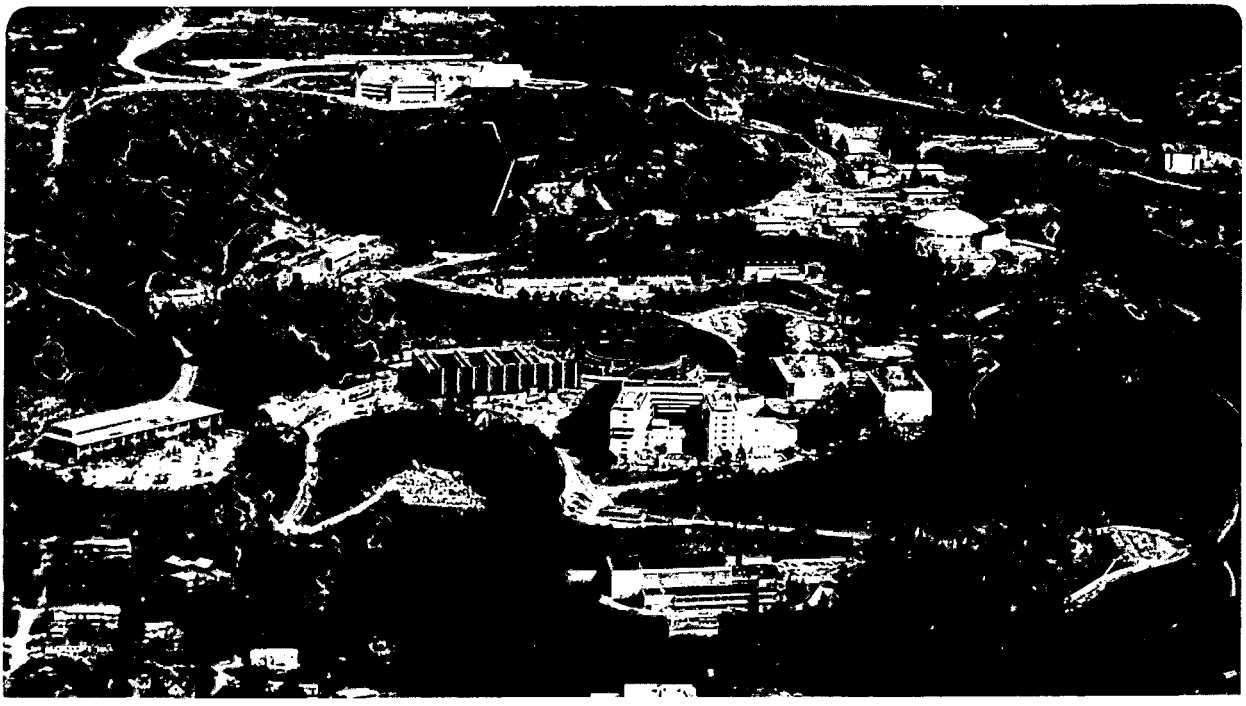

LBID-218 c.1

LEGAL NOTICE

This book was prepared as an account of work sponsored by an agency of the United States Government. Neither the United States Government nor any agency thereof, nor any of their employees, makes any warranty, express or implied, or assumes any legal liability or responsibility for the accuracy, completeness, or usefulness of any information, apparatus, product, or process disclosed, or represents that its use would not infringe privately owned rights. Reference herein to any specific commercial product, process, or service by trade name, trademark, manufacturer, or otherwise, does not necessarily constitute or imply its endorsement, recommendation, or favoring by the United States Government or any agency thereof. The views and opinions of authors expressed herein do not necessarily state or reflect those of the United States Government or any agency thereof.

Lawrence Berkeley Laboratory is an equal opportunity employer.

LAWRENCE BERKELEY LABORATORY — UNIVERSITY OF CALIFORNIA

ENGINEERING NOTE

CODE	SERIAL	PAGE
MME Book No. 640	MT 306	1 OF 4

AUTHOR	DEPARTMENT	LOCATION	DATE
Donald H. Nelson	Electronics Engineering	B25A-124	November 23, 1981

PROGRAM — PROJECT — JOB

TITLE Bevatron 20 MeV Injector Copper Tape Solenoids 52-MK2 4 Inch Diameter Solenoid Drwg. No. 12P1486-A1 & A2 - Magnetic Field Measurements

In October 1981, at the request of Emery Zajec, Magnetic Measurements Engineering provided a measurement system for testing two additional (MT 300 describes the tests conducted on the first, i.e., 12P1486A3) 4 inch diameter solenoids - 12P1486A1 & 12P1486A2.

Ed Cyr (MME) set-up test equipment for measuring the axial component of Magnetic Induction on the axis of two solenoids (B_z (r=0, z) vs z).

Figure 1 shows the test equipment and Table 1 lists specific equipment.

Emery Zajec used the test equipment to measure the two magnets each at three current levels.

Figures 2 and 3 display, for magnets A1 and A2 respectively, B_z(r=0, z) vs z for three magnet currents. The purpose of this note is to preserve this information.

Distribution: M.I. Green
E.C. Hartwig/L.J. Wagner/W.H. Deuser
R.M. Richter
E. Zajec
Magnet Measurements Engineering (4)

This work was supported by the U.S. Dept. of Energy under Contract DE-AC03-76SF00098.

LAWRENCE BERKELEY LABORATORY - UNIVERSITY OF CALIFORNIA

ENGINEERING NOTE

MME Book No. 640	FILE NO. MT 306	PAGE 2 of 4

SUBJECT

NAME ED CYR

DATE November 23, 1981

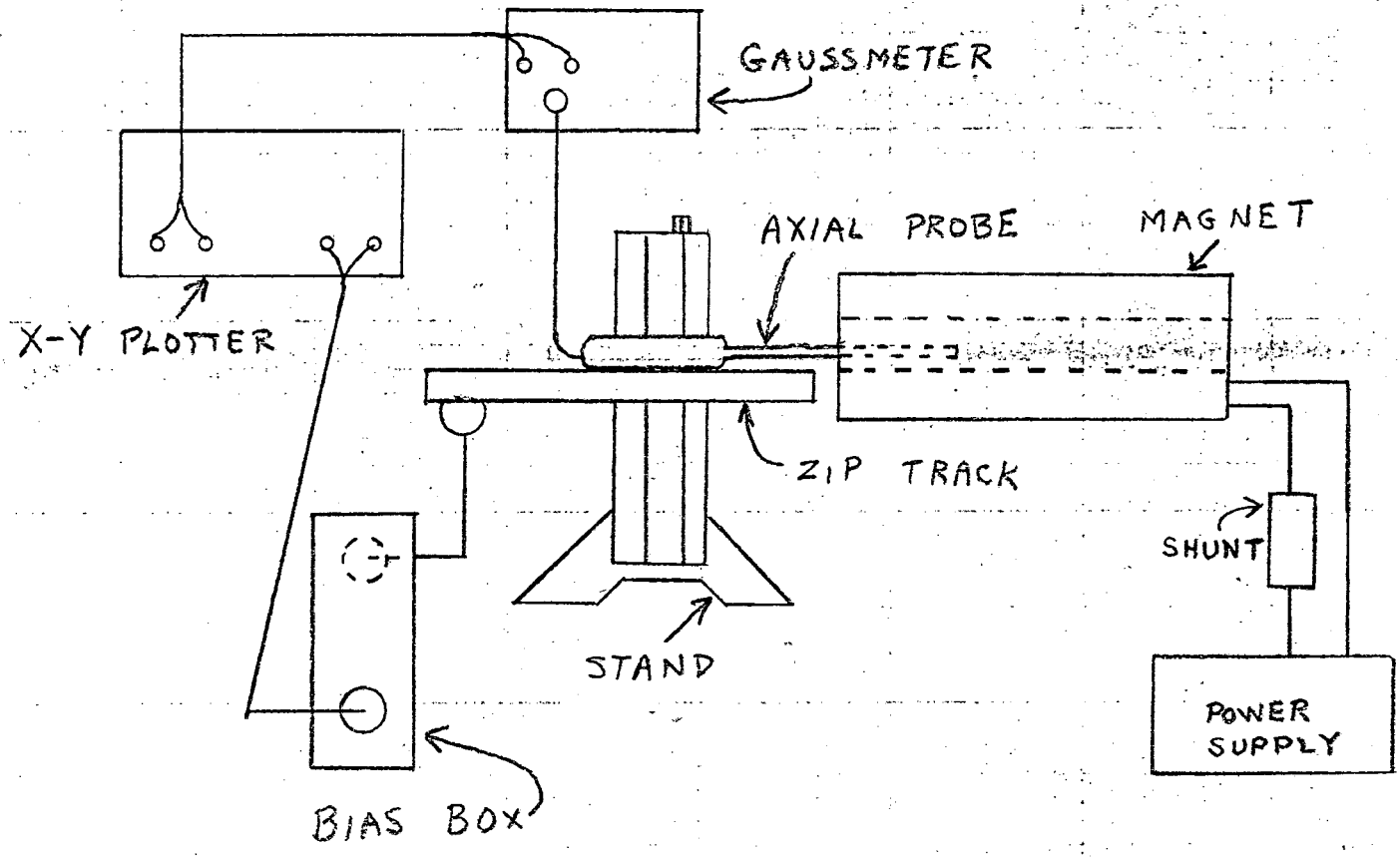

FIGURE 1 TEST EQUIPMENT

Equipment	Description	Identification
Magnets(Under Test)	4 Inch Dia. x 10 In. Long Solenoid, S2MK2	12P1486A1 & A2
Magnet Power Supply	Dual 49 kW	8Y3605
Current Monitoring Shunt	800 A/1000 mV	—
Gaussmeter	F.W. Bell Model 8512	AEC No. 517835
Probe	F.W. Bell (Axial) Model HAR8-2518	S/N 129089
xy Plotter	Moseley Model 7000AR	AEC No. 159260
Zip Track	MME 16 Inch Linear Positioner	—
Bias Box	Drawing No. 5V8032	—

TABLE I TEST EQUIPMENT

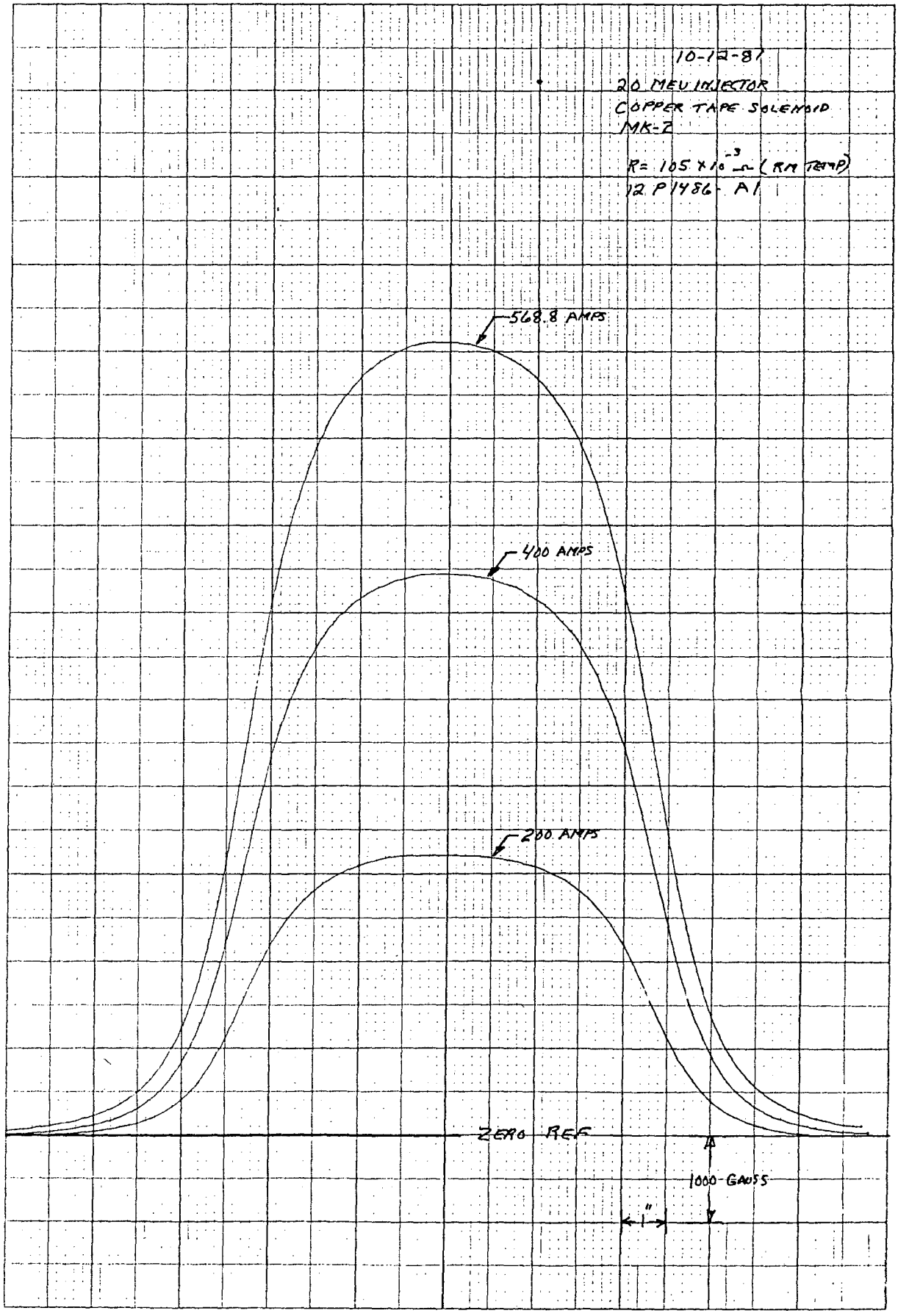
10-12-87
20 MEV INJECTOR
COPPER TAPE SOLENOID
MK-2
R= 105 x 10^-3 Ω (RM TEMP)
12 P 1486 - A1
568.8 AMPS
400 AMPS
200 AMPS
ZERO REF
1000 GAUSS
1"

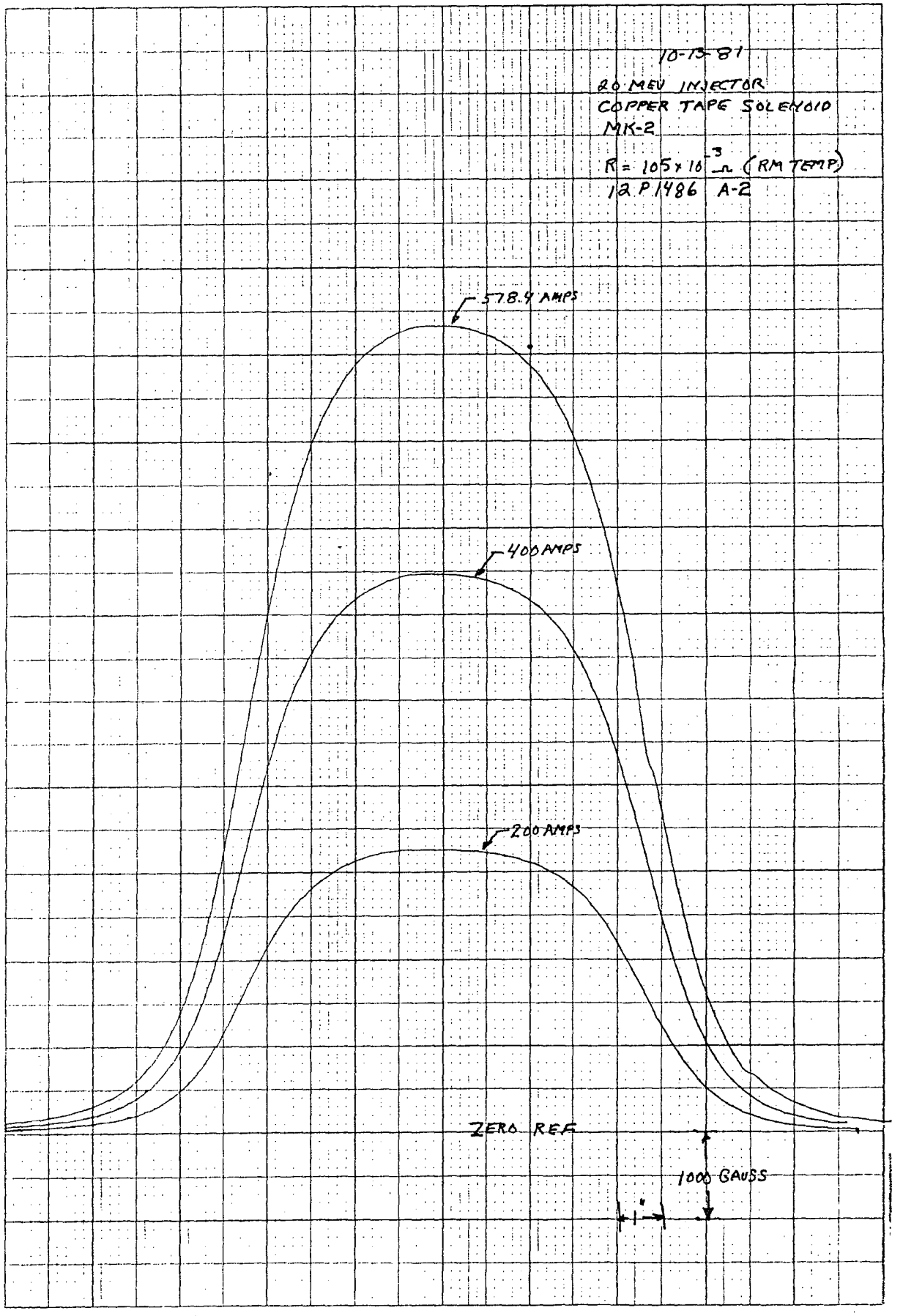
10-13-81
20 MEV INJECTOR
COPPER TAPE SOLENOID
MK-2
R = 105 x 10^-3 Ω (RM TEMP)
12 P 1486 A-2
578.4 AMPS
400 AMPS
200 AMPS
ZERO REF
1000 GAUSS
1"

This report was done with support from the Department of Energy. Any conclusions or opinions expressed in this report represent solely those of the author(s) and not necessarily those of The Regents of the University of California, the Lawrence Berkeley Laboratory or the Department of Energy.

Reference to a company or product name does not imply approval or recommendation of the product by the University of California or the U.S. Department of Energy to the exclusion of others that may be suitable.

TECHNICAL INFORMATION DEPARTMENT
LAWRENCE BERKELEY LABORATORY
UNIVERSITY OF CALIFORNIA
BERKELEY, CALIFORNIA 94720