LBID-554
UC-38 c.1

Lawrence Berkeley Laboratory
UNIVERSITY OF CALIFORNIA

Engineering & Technical Services Division

RECEIVED
LAWRENCE
BERKELEY LABORATORY

APR 21 1983

LIBRARY AND
DOCUMENTS SECTION

For Reference

Not to be taken from this room

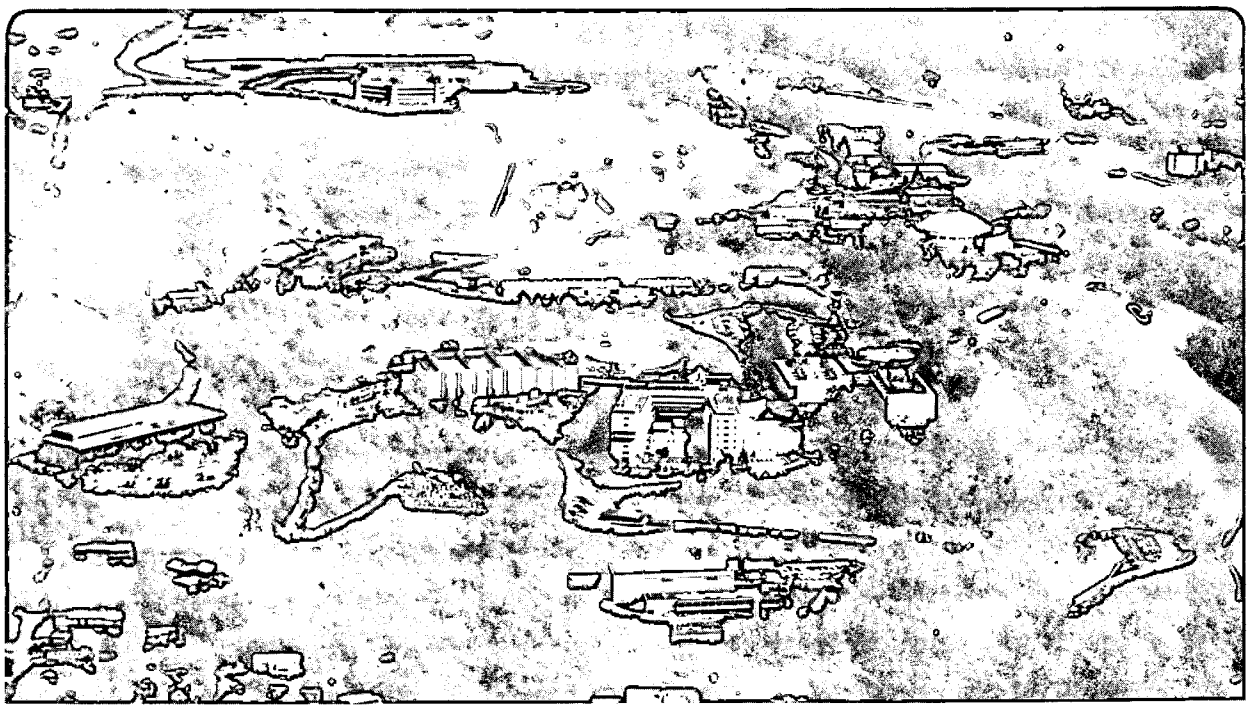

LBID-554
c.1

LEGAL NOTICE

This book was prepared as an account of work sponsored by an agency of the United States Government. Neither the United States Government nor any agency thereof, nor any of their employees, makes any warranty, express or implied, or assumes any legal liability or responsibility for the accuracy, completeness, or usefulness of any information, apparatus, product, or process disclosed, or represents that its use would not infringe privately owned rights. Reference herein to any specific commercial product, process, or service by trade name, trademark, manufacturer, or otherwise, does not necessarily constitute or imply its endorsement, recommendation, or favoring by the United States Government or any agency thereof. The views and opinions of authors expressed herein do not necessarily state or reflect those of the United States Government or any agency thereof.

Lawrence Berkeley Laboratory is an equal opportunity employer.

DISCLAIMER

This document was prepared as an account of work sponsored by the United States Government. While this document is believed to contain correct information, neither the United States Government nor any agency thereof, nor the Regents of the University of California, nor any of their employees, makes any warranty, express or implied, or assumes any legal responsibility for the accuracy, completeness, or usefulness of any information, apparatus, product, or process disclosed, or represents that its use would not infringe privately owned rights. Reference herein to any specific commercial product, process, or service by its trade name, trademark, manufacturer, or otherwise, does not necessarily constitute or imply its endorsement, recommendation, or favoring by the United States Government or any agency thereof, or the Regents of the University of California. The views and opinions of authors expressed herein do not necessarily state or reflect those of the United States Government or any agency thereof or the Regents of the University of California.

LAWRENCE BERKELEY LABORATORY - UNIVERSITY OF CALIFORNIA

ENGINEERING NOTE

CODE	SERIAL	PAGE
AA0100	M5925	1 of 10

AUTHOR	DEPARTMENT	LOCATION	DATE
Michael A. Green	Mechanical Engineering	Berkeley	June 4, 1982

PROGRAM — PROJECT — JOB

Mechanical Engineering, General

Sandia Cryostat and Magnet

TITLE

Basic Concepts of the New Sandia Cryostat

The cryostat described here is a horizontal solenoid cryostat with a warm bore diameter of 1.90 meters. The outside diameter of the center section of the cryostat is 2.50 m. The estimated total height of the cryostat is 3.25 m. The center of the magnet bore will be about 1.50 m from the ground. The cryostat is designed to house a two meter diameter test solenoid (the C magnet) or a new solenoid which is approximately the same size but 5 times the design stored energy. The warm bore of the cryostat will house a pulsed MHD generator built by Sandia to power lasers for laser fusion. The cryostat length is 1.25 m.

The cryostat for the magnet has a number of features which are similar to the TPC magnet which is being built by LBL. Like the LBL TPC magnet, both the C coil and the new coil will be cooled by forced two phase helium flowing in tubes which are part of the coil package. The general features of the cryostat are as follows:

1) Two phase helium is led into and out of the cryostat at the center bottom. [1]

2) Gas-cooled Tampax leads feed up to 1500 A into the magnet from top. [2]

3) The magnet coil package is supported by a self-centering support system capable fo carrying up 10 metric tons. (The supports can be beefed up to support 20 tons for the new magnet.) [3,4]

4) A clear warm bore of 1.90 m.

5) No services or protrusions are at the ends of the cryostat. All services are fed radially inward at the center of the cryostat.

6) Vacuum pumping includes molecular sieve cryoadsorption pumping on the coil package itself. Separate pumping ports are also provided.

7) The quench protection resistor is built onto the outside of the cryostat. (This is used in the event the magnet is explosively disconnected.)

8) Cooldown can be controlled at the cryostat permitting co-axial transfer lines should this prove necessary.

9) A pulsed center tap capacitor can be used for quench protection of the C magnet. [5]

10) Instrumentation wires can be brought out of the cryostat.

11) The shorted secondary circuit wires can be brought out of the cryostat should this prove necessary.

12) Persistent mode operation is possible.

The basic design philosophy is a simple one. The cryostat consists of four parts; a central ring through which all services are fed to the magnet and to which the magnet is supported, two end hats, and a warm bore tube. When the end hats and central warm bore tube are removed, there is almost complete access to the ends of the magnet and the cryogenic plumbing.

The magnet itself is supported from the central ring by a self-centering compression rod support system which is similar to one used on the TPC magnet. [4] The liquid nitrogen shields are supported from the magnet coil package and the move with it. The liquid nitrogen plumbing is accessible from the ends.

Cryogenic services for liquid helium are fed into the cryostat through a port at the bottom. Other locations for this port can be considered. Gas-cooled "Tampax" type electrical lead comes out of the lead neck at the top of the cryostat. [2,6] These leads, which are a single copper tube 25.4 mm in diameter can carry up to 1500 A. The lead neck can also contain a cryogenic by-pass which can be used during a magnet cooldown in the event the dual Sandia transfer lines are replaced by a single co-axial transfer line. The lead neck can be disassembled from the cryostat center permitting easy access to the base of the gas-cooled leads and the cooldown circuit plumbing. This neck does not have to be vertical; it could be at any angle above horizontal. [2]

Table 1 presents the basic dimensions of the cryostat and the two magnets to be put in them. These dimensions may be altered somewhat as the detailed design proceeds. Figure 1 is a simplified schematic of the magnet within the cryostat. Omitted are plumbing details, nitrogen shields, superinsulation and wiring. This figure is designed to show the cryostat and the placement of major components within it. Figure 2 is a side view of the bottom of the cryostat without the end hats. Shown is a schematic view of the magnet within the cryostat. Figure 3 is in two views. It shows the top part of the cryostat fully assembled so that one can see the lead neck in relation to the rest of the cryostat.

Table 2 presents an estimate of cryostat heat leak and refrigeration needed for the magnet, magnet leads and cryostat. The most probable heat leak of 6.0 W is realistic when one looks at the performance of the TPC magnet if in its cryostat. There is superinsulation both inside and outside the liquid nitrogen shields, so one can expect the cryostat to perform well even when the vacuum approaches 10^{-4} torr; [7] it is clear from Table 2 that the electrical leads require a lot of refrigeration in order to supply the 0.15 gs^{-1} of cold helium to cool them.

References

1. M. A. Green, W. A. Burns, J. D. Taylor and H. W. Van Slyke, "The TPC Magnet Cryogenic System", LBL-10552, Mar. 1980.

2. R. G. Smits et al., "Gas Cooled Electrical Leads for Use on Forced Cooled Superconducting Magnets", to be published in Advances in Cryogenic Engineering, Vol. 27, LBL-12783.

3. M. A. Green, "Large PEP Detector, Large Thin Superconducting Solenoid Magnet, Cryostat Support System for the Large Solenoid Magnet", LBL Engineering Note M5011, Dec. 1976.

4. M. A. Green, "PEP-4, Large Thin Superconducting Solenoid Magnet, Cryogenic Support System Revisited", LBL Engineering Note M5855, Mar. 1982.

5. J. D. Taylor et al., "Quench Protection for a 2MJ Magnet", IEEE Transactions on Magnetics MAG-15(1), Lawrence Berkeley Laboratory Report LBL-7576, January 1979.

6. M. A. Green et al., "PEP-4. Large Superconducting Solenoid Magnet, Preliminary Test of the LBL Tampax Leads Operating at Angles Near Horizontal", LBL Engineering Note M5524, May 1980.

7. M. A. Green, "PEP-4 Experiment, Large Superconducting Solenoid, Design of Superinsulation Systems", LBL Engineering Note M5376, July 1979.

TABLE 1. Basic dimensions of the Sandia cryostat and the magnets to be installed within it

	dimension (mm)
Overall cryostat dimensions	
Inside warm bore diameter	1900
Outside diameter on the hats	2300
Outside diameter on the ribs	∿2500
Overall cryostat length	∿1250
Lead neck length above ribs	∿ 500
Total cryostat height from floor	∿3250
Bore height from floor	∿1500
Basic C magnet bore tube dimensions (cold)	
Inside diameter	1972.7
Outside diameter	2055.3
Length	760.3
New magnet bore tube dimensions (cold)	
Inside diameter	1961.8
Outside diameter	2121.8
Length	800.0
Cryostat clearance dimensions	
Inner bore tube OD	1919.1
Hat inside diameter	2274.6
Inside length	1161.8
Lead neck inside diameter	291.9
Distance from magnet coil to inside of lead neck top plate (when magnet is cold)	≥663.7

TABLE 2. Estimated heat leaks and refrigeration requirements for the Sandia cryostat system

		Most Probable w/LN_2 Shield	Worst case Maximum w/o LN_2 Shields
Heat leak through insulation	(w)	1.0	10.4
Heat leak down support rods	(w)	1.5	4.5
Instrumentation leads	(w)	0.5	1.5
Gas-cooled leads	(w)	2.0	2.0
Plumbing within the lead neck	(w)	1.0	3.0
TOTAL HEAT LEAK	(w)	6.0	21.4
1500A gas-cooled lead gas flow required	(gs^{-1})	0.15	0.15
Refrigeration need for lead gas *	(w)	16.5	18.8
TOTAL REFRIGERATION REQUIRED BY MAGNET	(w)	22.5	40.2

*The refrigeration-liquifaction coefficient for the Model 1400 refrigerator is a function of engine speed. A most probable refrigeration-liquifaction coefficient is 110 J g^{-1}. We have measured values of this coefficient as high as 125 J g^{-1} at 90 RPM engine speed.

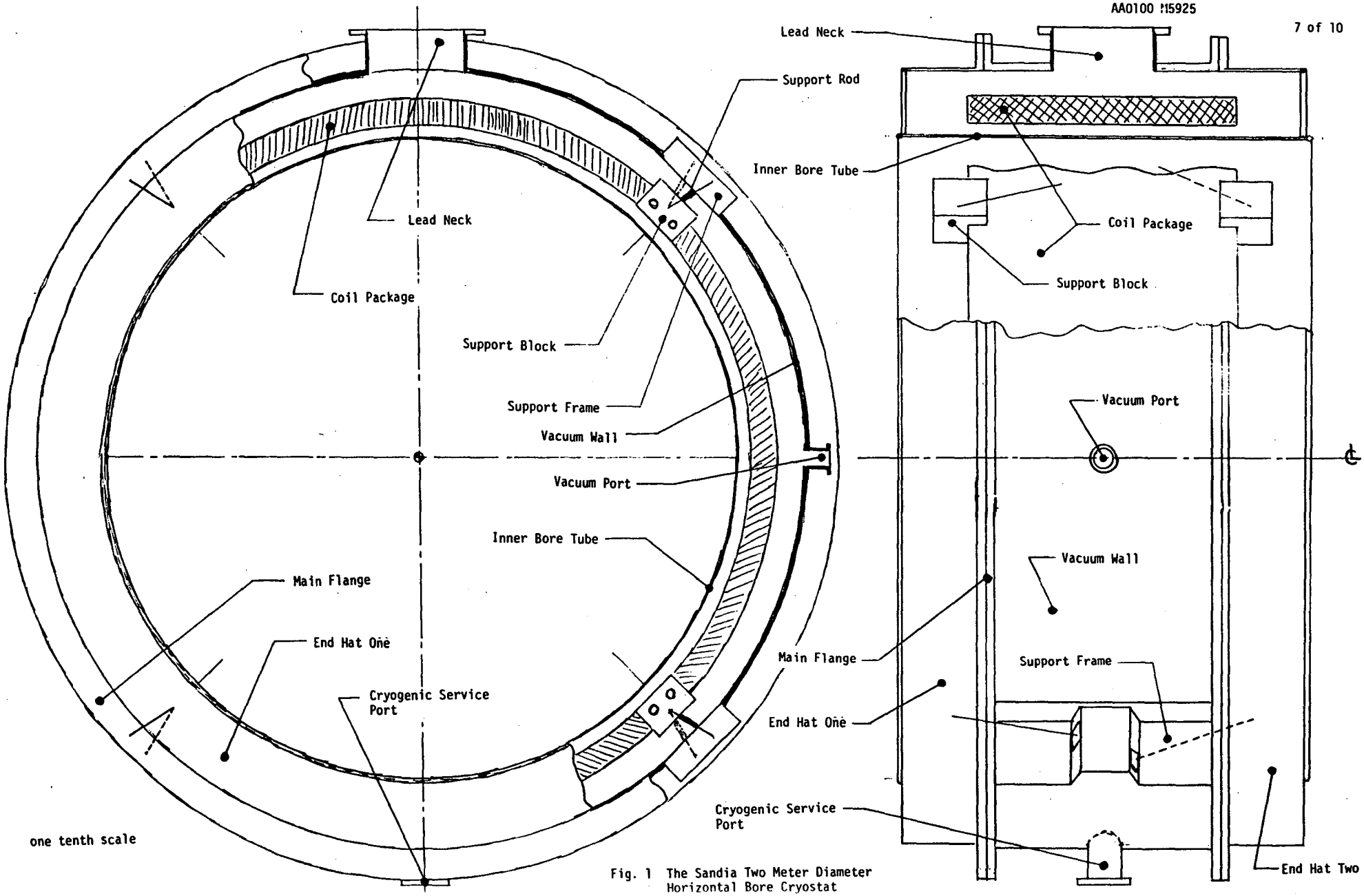

Fig. 1 The Sandia Two Meter Diameter Horizontal Bore Cryostat

Fig. 2 A Side View of the Lower Part of the Central Section of the Sandia Cryostat with the Coil Package Installed

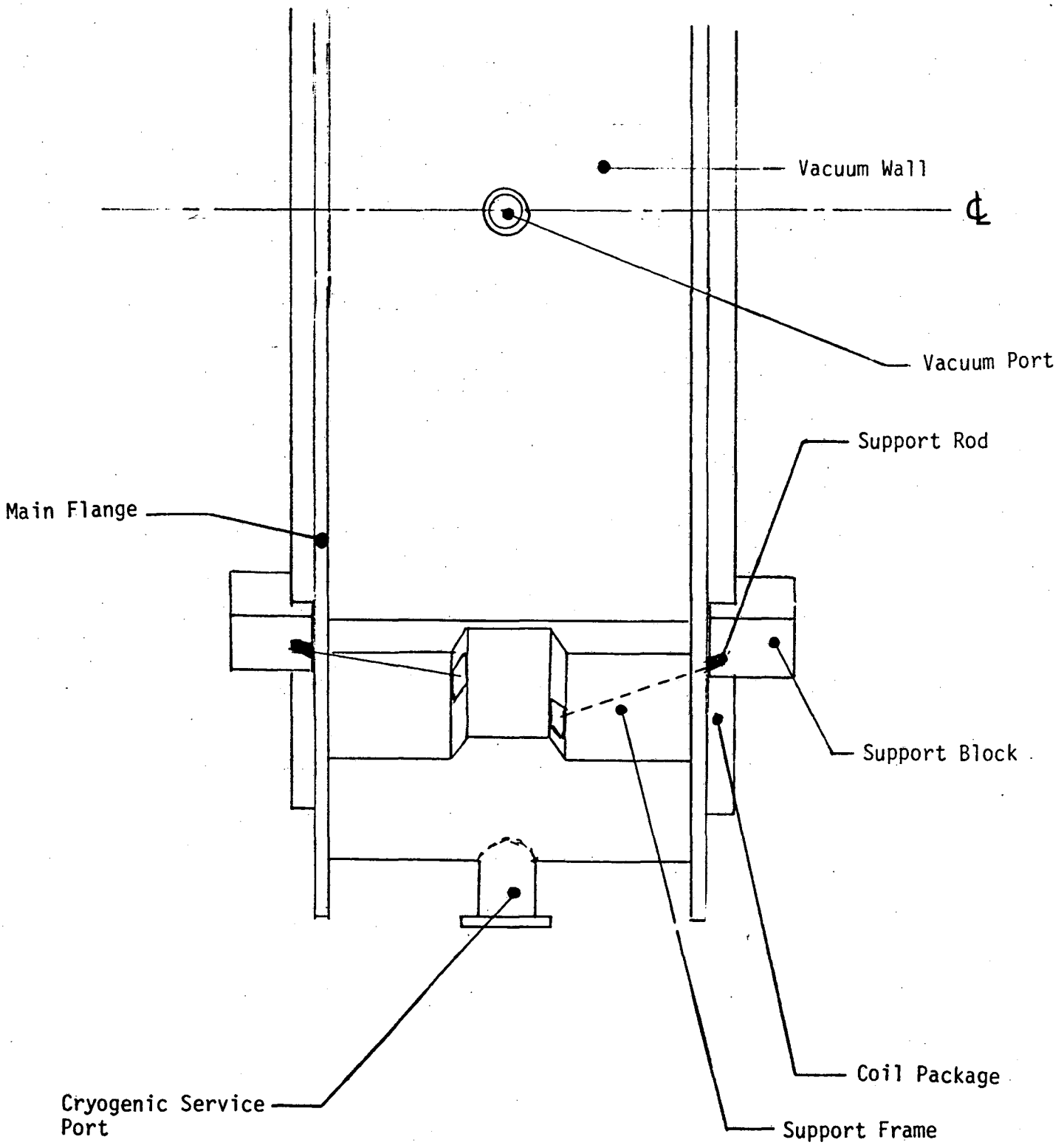

one tenth scale

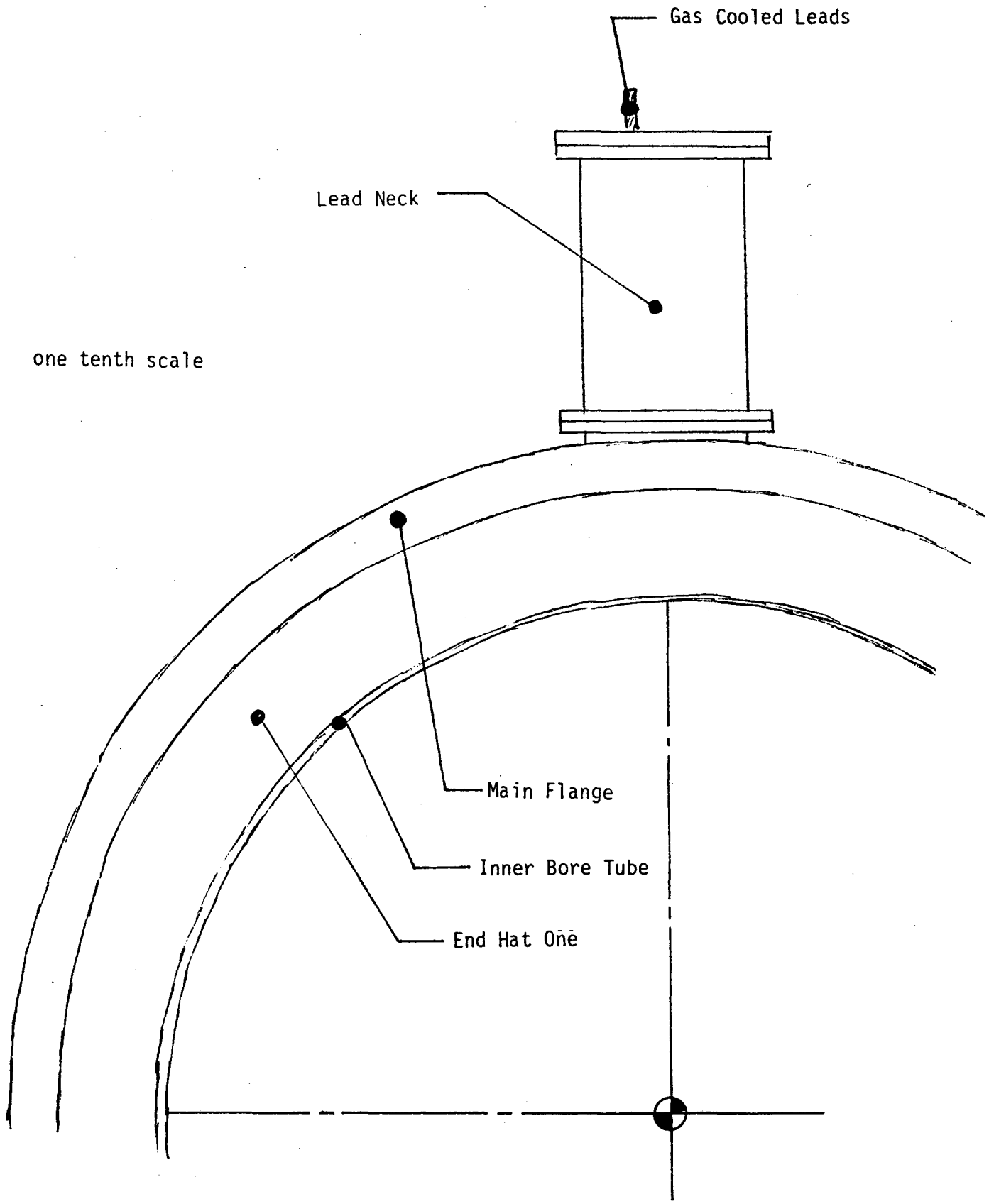

Fig. 3A End View of the Fully Assembled Sandia Cryostat at the Top

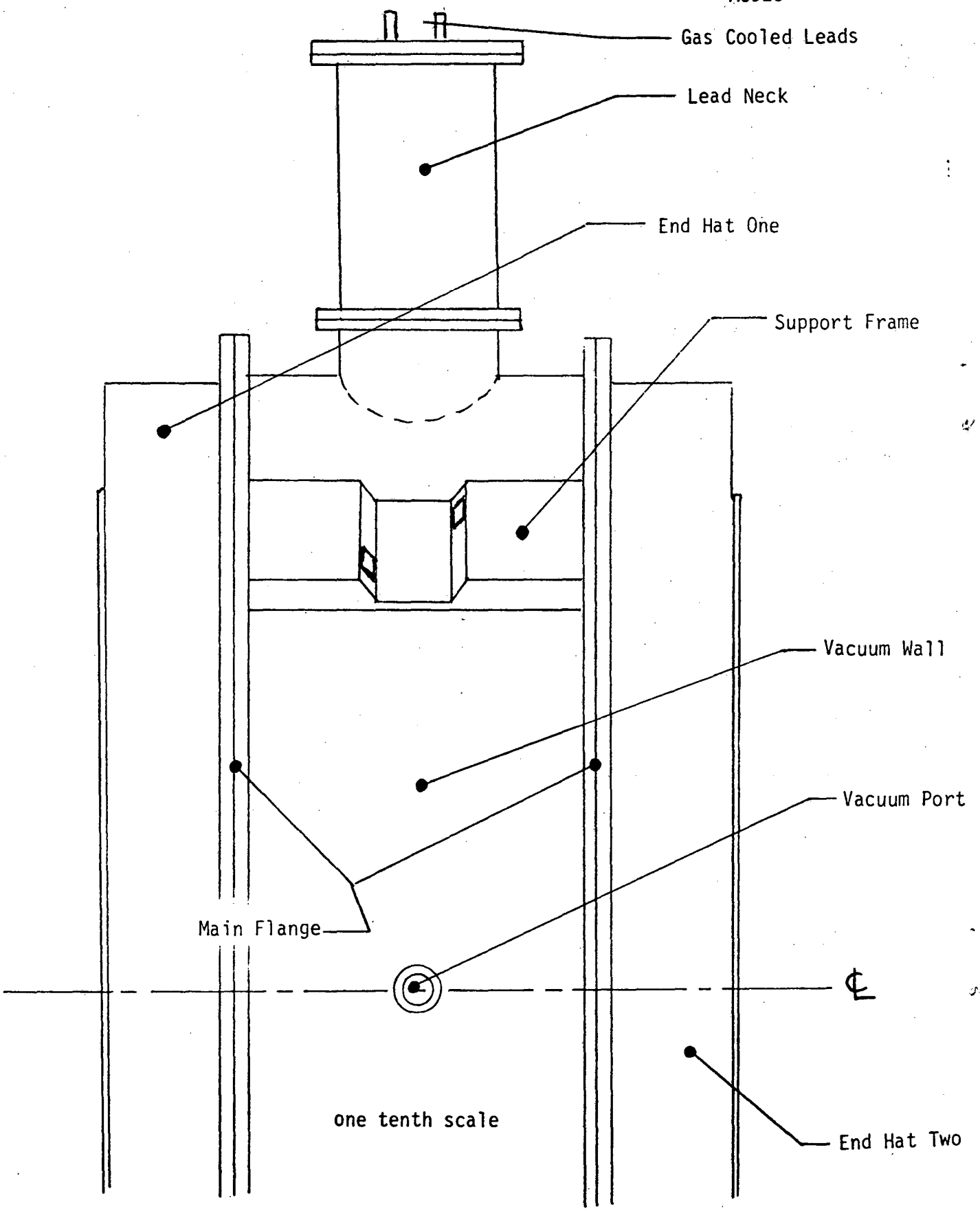

Fig. 3B Side View of the Fully Assembled Sandia Cryostat at the Top

This report was done with support from the Department of Energy. Any conclusions or opinions expressed in this report represent solely those of the author(s) and not necessarily those of The Regents of the University of California, the Lawrence Berkeley Laboratory or the Department of Energy.

Reference to a company or product name does not imply approval or recommendation of the product by the University of California or the U.S. Department of Energy to the exclusion of others that may be suitable.

TECHNICAL INFORMATION DEPARTMENT
LAWRENCE BERKELEY LABORATORY
UNIVERSITY OF CALIFORNIA
BERKELEY, CALIFORNIA 94720